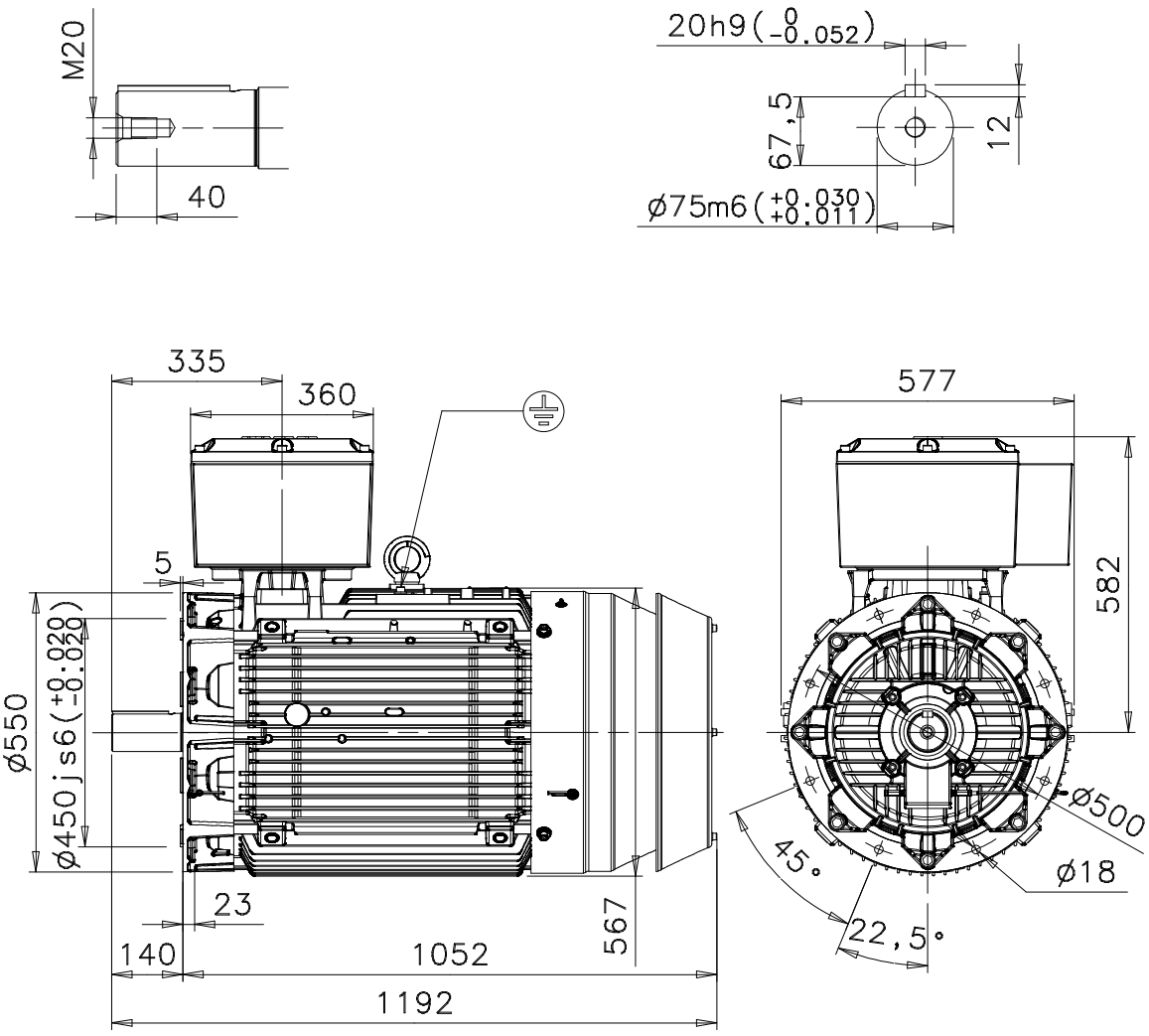

Additional information:

Dimension Print	Motor Type: M3JP 280SM_ 4-12 V1	Document No: 3GZF500228-20 A 13 JP 280 A
Description: STANDARD SQUIRREL CAGE MOTOR WITH PROTECTIVE ROOF.		
Unit: Electrical Machines, LV Motors Date: 23.07.2003	Issued by: C.Vägar Approved by: J.Vuorinen	Replaces: Replaced by:
ABB Oy	Customer Reference:	ABB