We reserve all rights in this document and in the information contained therein. Reproduction, use or disclosure to third parties without express authority is strictly forbidden.
© Copyright ABB.

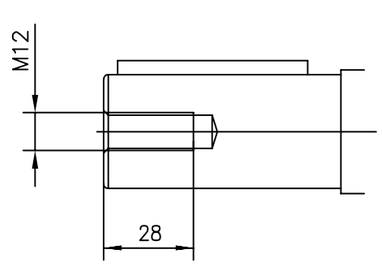

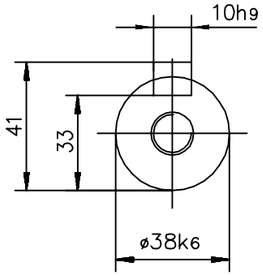

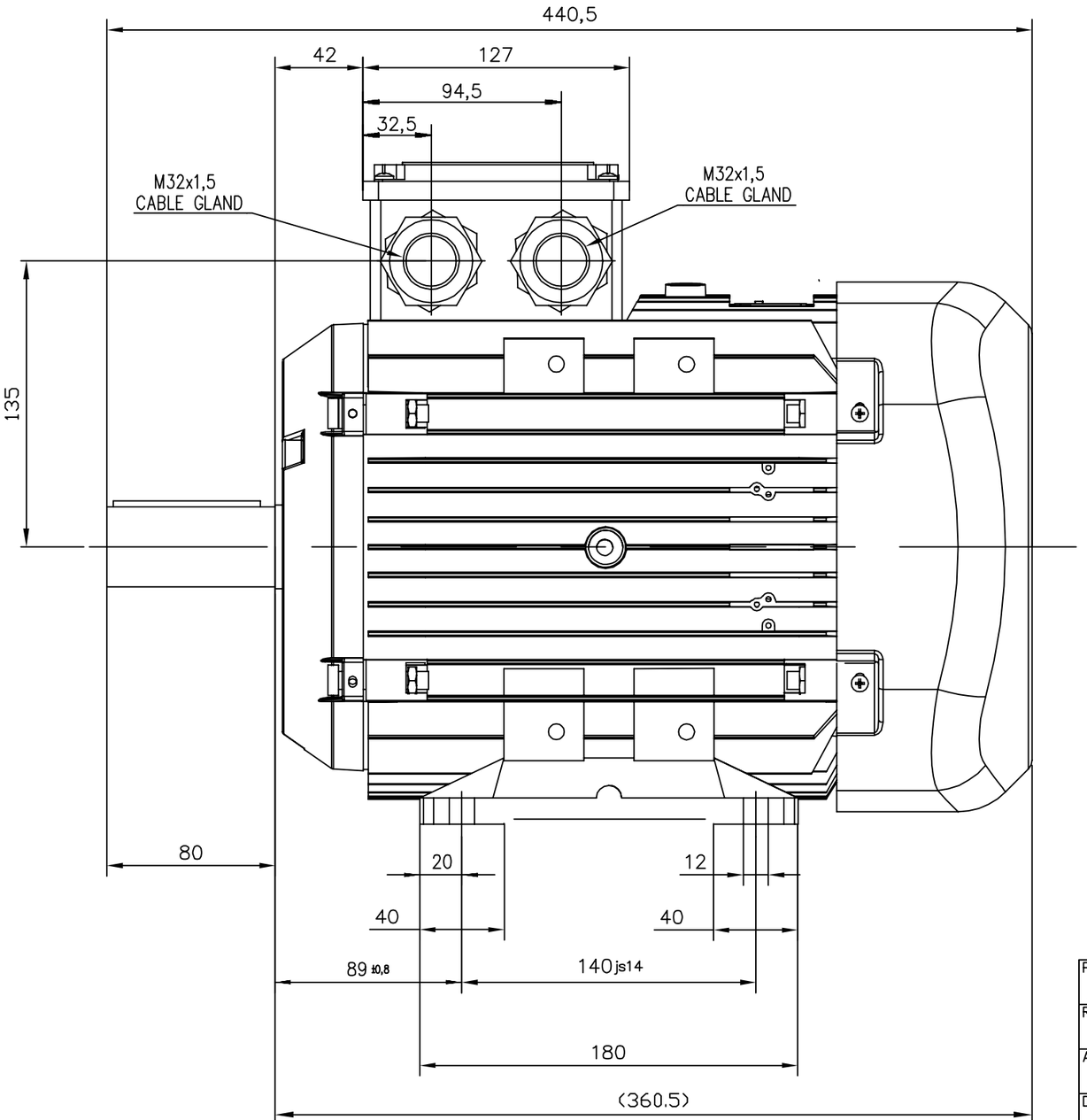

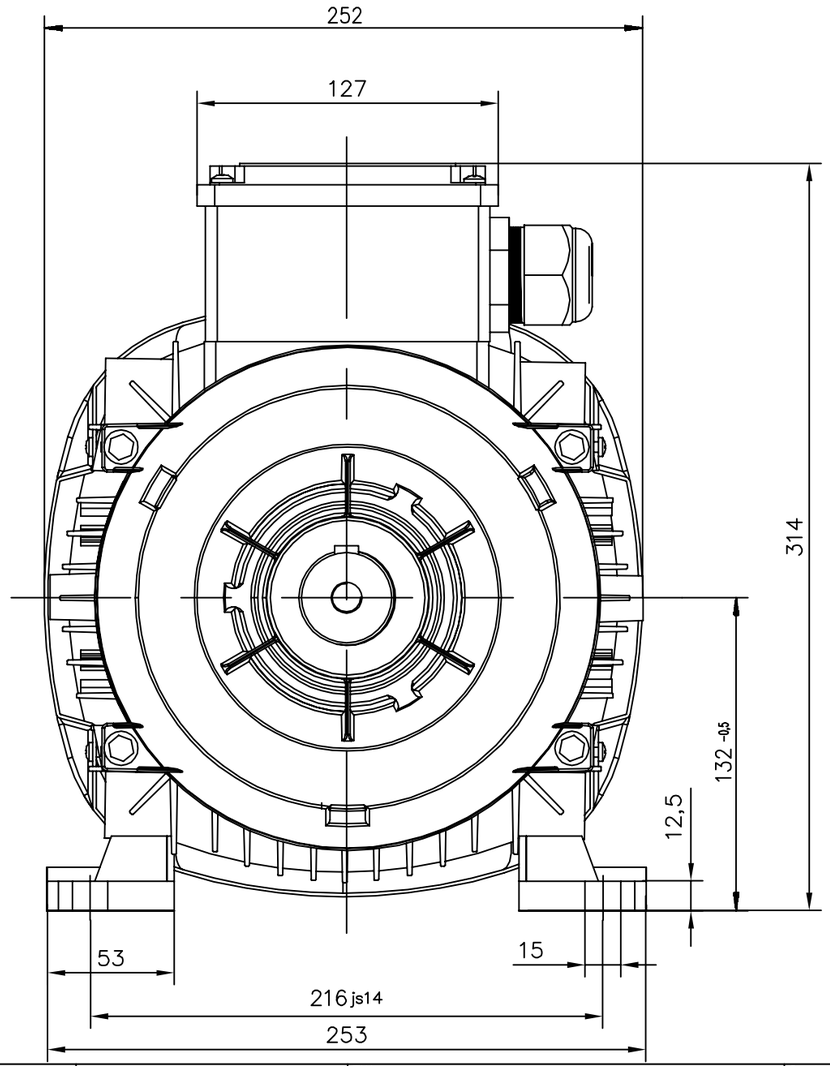

Prepared 2015-06-25 V.ANDERSSON	Separate part list ☐ with separate No. ☐	Title Motor Dimension Print	Scale
Reviewed	Responsible Department DMMG/LMATM		
Approved 2015-06-25 E.NORDMARK	Original Dwg		Language EN
Distribution Functional Code	Order No. Weight	Type M1AA 132S Mounting IM1001	Size A3
ABB Motors and Generators		Document No. 3GZW500613-23 Revision A	Sheet 1/1

ABBA3BF1 AutoCAD