4500/0011 Issue 5 5.92

Operating Instructions

Models 4510, 4520, 4511 and 4521 Microprocessor Based Conductivity Monitors

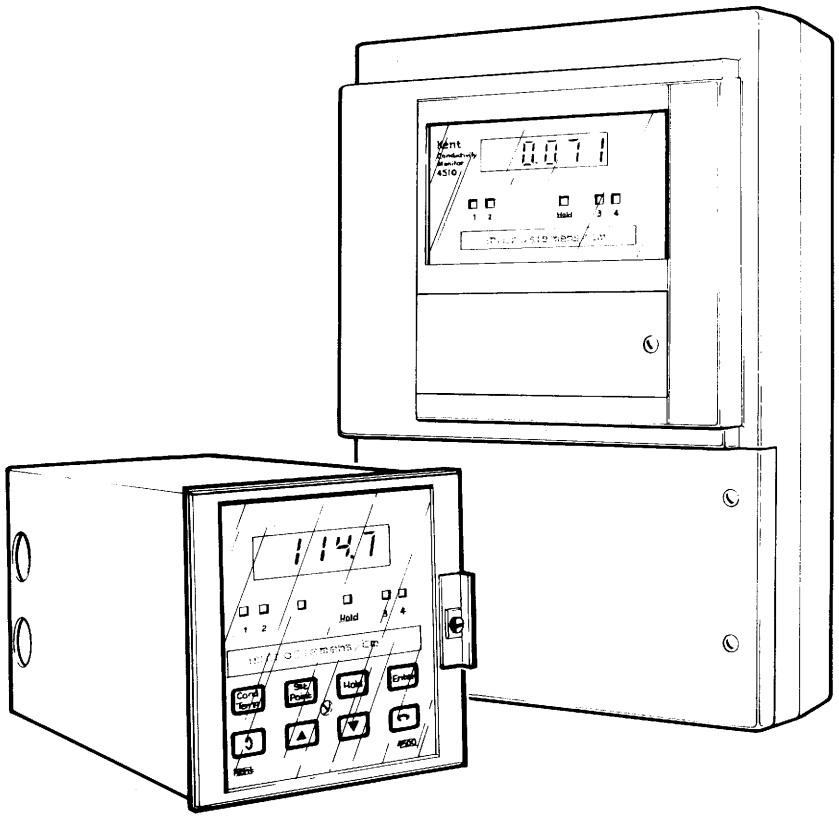

ABB Kent-Taylor Ltd.

ASEA BROWN BOVERI

ABB Kent-Taylor Ltd.

St Neots

BS 5750
Part 1 : 1987
ISO 90001 1987
and
EN 29001 1987
Cert. No. Q5907

Stonehouse

AQAP 1 Ed. 3
Reg. No. 1AVK06

ABB Kent-Taylor is a new world force in process instrumentation offering users a total capability in the wide range of product lines available, backed by the worldwide manufacturing, test, calibration and sales and service facilities that are expected from a market leader.

The quality, accuracy and performance of the Company's products result from over 100 years experience of instrument manufacture, combined with a continuous programme of innovative design and development to incorporate the latest technology.

The NAMAS Calibration Laboratory No. 0255(B) is just one of the ten flow calibration plants operated by the Company, and is indicative of ABB Kent-Taylor's dedication to quality and accuracy.

The Company's instrumentation is suitable for a wide range of industrial and scientific applications such as process control, batch processing, power generation, heat treatment, heating and ventilation, laboratories, food, chemical, petrochemical and water industries.

All products are backed by a high standard of technology, service and engineering support, from skilled, experienced sales and design engineers. ABB Kent-Taylor also provides a comprehensive after sales service from five regional service centres strategically located throughout the UK.

ABB Kent-Taylor – a comprehensive process instrumentation range

Sensors, transmitters and related instruments for flow, temperature, pressure, level and other process variables

Flowmeters – electromagnetic, ultrasonic, turbine, differential pressure, Wedge, rotary shunt, pitot.

Differential Pressure transmitters – electronic and pneumatic.

Temperature – sensors and transmitters, fibre optic systems.

Pressure transmitters.

Level – sensors and controllers.

Tank gauging systems.

Cable-length measuring systems.

Indicators, recorders, controllers and process management systems

Recorders – circular and strip-chart types – single and multi-point – for temperature, pressure, flow and many other process measurements.

Controllers – digital display, electronic, pneumatic. Discrete single-loop and multi-loop controllers which can be linked to a common display station, process computer or personal computer.

Pneumatic panel or rack-mounted display and control instrumentation

Liquid and gas monitors and analysers for on-line and laboratory applications

Sensors – pH, redox, selective ion, conductivity.

Monitors and Analysers – for water quality monitoring in environmental and power generation applications.

Packaged analytical instrumentation laboratories.

Gas analysers – zirconia, paramagnetic, infrared, thermal conductivity.

Health and Safety at Work Act 1974 (UK)

Section 6(4) of the above Act requires manufacturers to advise their customers on the safety and handling precautions to be observed when installing, operating, maintaining and servicing their products. Accordingly, the following points must be noted:

1. The relevant sections of these instructions must be read carefully before proceeding.
2. Installation, operation, maintenance and servicing must only be carried out by suitably trained personnel and in accordance with the information given.
3. Normal safety procedures must be taken to avoid the possibility of an accident occurring.

Safety advice concerning the use of the equipment described in this manual may be obtained from the Company address on the back cover, together with servicing and spares information.

U.S.A. Regulations - Power Supply Connections

WARNING. When connected to an externally fused power source the fuse shall be placed in the line voltage conductor of the instrument and shall have a rating of 1 Ampere (115V) and be installed in accordance with the current National Electrical Code Article 240.

When connected to a switched power source the switch shall be specified and installed as set out in the current National Electrical Code Article 380.

The green/yellow coloured protective grounding conductor shall be correctly connected to the protective ground (earth) stud and shall not be used for other purposes. It shall be connected in such a way that the live conductors break prior to the protective grounding conductor when the power connections are accidentally torn off.

If a flexible power cord is used to connect the instrument to the supply, the cord shall comply with the current National Electrical Code Article 400.

CONTENTS **Page**

1 INTRODUCTION

Models 4510,4511,4520 and 4521, microprocessor-based conductivity monitors and associated measuring cells have been designed for continuous monitoring and control of the conductivity of demineralised water, steam condensates, water distillates, raw water and de-ionised water.

Instrument functions are similar on all versions and are programmed via eight tactile membrane switches and selected by repositioning plug-in links. The programmed functions are protected from unauthorised tampering by a five-digit security code.

Model 4510 has a single programmable conductivity input channel, together with a single temperature input channel. It is housed in a robust, wall-mounted plastic case with two hinged, quick release covers for access to the membrane switches and connection terminals. A pipe-mounted option is also available for this version.

continued overleaf

Model 4511 is a differential conductivity monitor with two independently programmable conductivity input channels and a single temperature input channel. The housing is identical to that of Model 4510. A pipe-mounted option is also available.

Model 4520 is functionally the same as Model 4510 but is housed in a panel-mounted DIN case of metal construction, with the programme switches located behind a hinged, glazed, lockable door and terminal connections at the rear.

Model 4521 is a differential conductivity monitor, functionally the same as Model 4511, but housed in a panel-mounted DIN case, as for Model 4520.

The instruments have two blue-filtered vacuum fluorescent displays:

a 5-digit, seven-segment display which gives constant indication of a function of the measured conductivity or conductivities.

a 20-character, 7 x 5 dot-matrix display which is utilised when viewing or programming the instrument functions.

There are four alarm set points which can be independently assigned to either the conductivity or temperature inputs. Each set point utilises a flashing l.e.d. for visual alarm indication and an optional relay output for additional alarm or control (two standard, four maximum). L.E.D. indication and alarm action, with respect to the set point, can be independently programmed and their operation delayed in the event of an alarm, if required. Differential set points are also programmable.

The current retransmission ranges are plug-in link selectable and may be assigned to either a function of the conductivity or the temperature input.

A 'hold' facility, when programmed, holds the alarm relay/ l.e.d. status and retransmission level to prevent inadvertent alarm operation during cell cleaning or instrument calibration.

When making temperature compensated measurements the sample temperature is sensed by a Pt 100 resistance thermometer mounted in the measuring cell. The temperature input range is pre-calibrated to -10 to 110°C or 14 to 230°F and the sample temperature can be displayed in either unit.

A dedicated set of conductivity measuring cells are utilised:

Model 2025 – Dip type
Model 2045 – Flow-line
Model 2077 – Screw-in (epoxy resin)
Model 2078 – Screw-in (stainless steel)
Model 2085 – Withdrawable (with Model 2089 valve assembly)

2 PREPARATION

2.1 Accessories

The accessories supplied differ with each instrument version.

2.1.1 Wall-Mounted Instruments

Programme card

2.1.2 Pipe-Mounted Instruments

Programme card
Pipe-mounting bracket (1)
U-bolts (2)
M10 washers (2) ┐ for U-bolts
M10 nuts (2) ┘
Support plates (2)

2.1.3 Panel-Mounted Instruments

Programme card
Door keys (2)
Cable entry bungs (6)
Panel-mounting clamps (2) ┐ ready-fitted to case
M5 nuts (2) ┘

2.2 Checking the Instrument Code Number

2.2.1 Wall-/Pipe-Mounted Instruments – Fig. 2.1

(1) Slacken the two quick-release fasteners and open the lower panel, hinged at the left hand edge.

(2) Check the instrument code number against Table 1, opposite.

Note. Interface functions are programmable, irrespective of whether or not relays and/or retransmission modules are fitted.

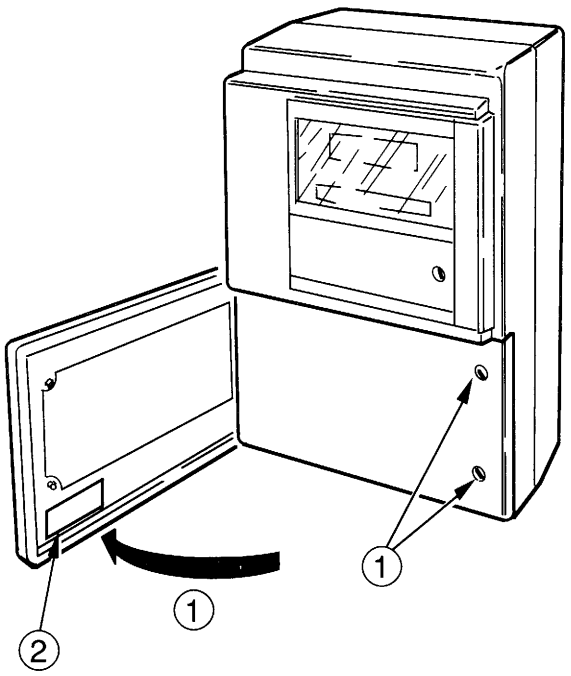

Fig 2.1 Checking the Instrument Code Number (Wall-/Pipe-Mounted Instruments)

2.2.2 Panel-Mounted Instruments – Fig. 2.2

① Unlock and open the door, hinged at the left hand edge.

② Release the chassis retaining screw and remove the chassis from the case.

③ Check the instrument code number (2 labels) against Table 1, below.

Note. Interface functions are programmable, irrespective of whether or not relays and/or retransmission modules are fitted.

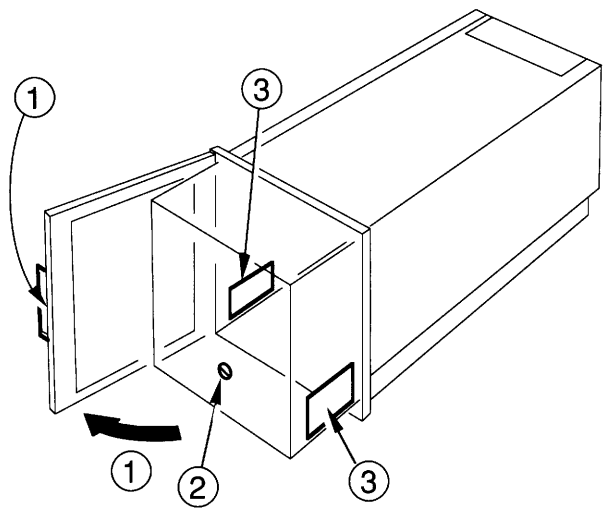

Fig 2.2 Checking the Instrument Code Number (Panel-Mounted Instruments)

2.3 Checking the Conductivity Cell Code Number – Fig. 2.3

The conductivity cell code number is located on the bulkhead plug (models 2025,2078 and 2085), or the cell moulding (models 2045 and 2077).

① Check the code number against Table 2, overleaf.

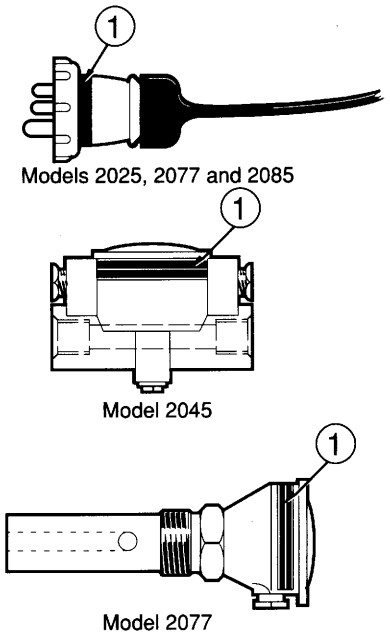

Fig 2.3 Checking the Conductivity Cell Code Number

Basic Type No.	Mounting & Version	No. of Alarm Relays* and Power Supply		Retransmission
Code Characters 1, 2	3, 4, 5, 6	7		8
		110V/230V A.C– Powered Instruments	10 to 30V D.C.– Powered Instruments	
45 Microprocessor-based analytical monitor	10/0 Wall/pipe-mounted single input conductivity monitor 11/0 Wall/pipe-mounted differential input conductivity monitor 20/0 Panel-mounted single input conductivity monitor 21/0 Panel-mounted differential input conductivity monitor	2 Two relays 3 Three relays 4 Four relays	C Two relays D Three relays E Four relays	1 One (current) 2 Two (current)

* Four alarm l.e.d.'s fitted and working always

Table 1 Interpretation of Instrument Code Number

Basic Type No.		Mounting & Version		Constant (K)		Process Connection Type		Temperature Compensation	
Code Characters 1, 2		3, 4, 5		6		7		8	
20	Electrolytic conductivity measuring cells	25/	Dip-type (epoxy resin)	4 6	0.1 1.0	0	Not applicable	0	None
		45/	Flow-line (epoxy resin)	4 6	0.1 1.0	0 8	1/2in BSP 1/2in NPT	5	Pt100 resistance thermometer
		77/	Screw-in (epoxy resin)	4 6	0.1 1.0	0 8	1in BSP 1in NPT		
		78/	Screw-in (stainless steel)	3 4	0.05 0.1	0 8	3/4in BSP 3/4in NPT		
		85/	Withdrawable (stainless steel)	3 4	0.05 0.1	0	See Note 2		

Notes.

1. Code combinations between any one pair of horizontal lines are available.
2. Withdrawable cells must be used in conjunction with a Model 2089 valve assembly.

Table 2 Interpretation of Conductivity Cell Code Number

2.4 Checking the Programme Card Details – Fig. 2.4 or 2.5
The programmed functions are defined on the programme card which should be mounted at a convenient location close to the instrument for future reference.

For interpretation of the function codes detailed on the card, and the format in which each is displayed when programming, refer to Fig. 2.4 following or 2.5 overleaf, as appropriate. The example shown is that of the standard instrument programme, i.e. as supplied if the user has not specified a particular dedicated programme.

If the functions detailed on the card are unsuitable, the instrument may be reprogrammed – see Section 8 on page 18. Write any changed function details on to the card.

COMPANY STANDARD PROGRAMME		DISPLAY FORMAT	INTERPRETATION
KENT 4500 CONDUCTIVITY TRANSMITTER MODEL 45** FOR **** MOUNTING			**Instrument Version** 4510 – wall mounting (or pipe mounting with bracket) 4520 – panel mounting Single conductivity input
DESCRIPTION LINE VOLTAGE	STD SET 220/240		**Supply Voltage** 110120V a.c. 220/240V a.c. 10 to 30V d.c. Set by plug-in link – see **SETTING UP** on page 15
CONDUCTIVITY UNITS	µS/cm	Cond. Units	**Conductivity Input Units** µS/cm – microsiemens/centimetre µS/m – microsiemens/metre mS/cm – millisiemens/centimetre mS/m – millisiemens/metre mΩ-cm – megohm-centimetres
CELL CONSTANT	K = 0.1	Cell Constant	**Cell Constant** K = 0.01 to 1.0
TEMP. COMPENSATOR	IN	Temp. Comp.	**Temperature Compensation** IN or OUT
TEMP. COEFFICIENT	.020	Temp. Coeff.	**Temperature Coefficient** 0%/°C (0.000) to 5%/°C (0.05)
REFERENCE TEMP.	25C	Ref. Temp.	**Reference Temperature** 20°C (68°F) or 25°C (77°F)
UPW TEMP. COMP.	OUT	UPW Temp. Comp.	**Ultra-pure Water Temperature Compensation** IN or OUT
DISPLAY SPAN	1000	Display Span	**Conductivity Range Full Scale** 0.0000 to 10,000 units
DISPLAY ZERO	0	Display Zero	**Conductivity Range Zero** 0.0000 to 5000 units (50% suppressed zero max.)
TEMP. UNITS	DEG C	Temp. Units	**Temperature Input Units** DEG C – display in degrees Celsius DEG F – display in degrees Fahrenheit

Fig 2.4 Checking the Programme Card Details, Single Conductivity Input Versions (4510 and 4520)

continued opposite

continued from previous page

COMPANY STANDARD PROGRAMME		DISPLAY FORMAT	INTERPRETATION
RETRANS 1 PARAMETER	COND	Retrans OP1	**Retransmission Output 1 Assignment** COND – assigned to conductivity input COND – assigned to temperature input
RETRANS 1 RANGE	4-20mA		**Retransmission Range** 0 to 1mA 0 to 10mA 0 to 20mA 4 to 20mA Set by plug-in link – see **SETTING UP** on page 15
RETRANS 1 SPAN	1000	OP1 Span	**Retransmission Output 1 Span (Full Scale)** Any value within the assigned input range (conductivity or temperature)
RETRANS 1 ZERO	0	OP1 Zero	**Retransmission Output 1 Zero** Suppressed by up to 90% assigned input range
RETRANS 1 HOLD	YES	OP1 Hold	**Retransmission Output 1 Hold** YES – hold on operation of 'Hold' switch NO – unaffected on operation of 'Hold' switch
RETRANS 1 LOG	NO	OP1 Log	**Logarithmic or Linear Retransmission Output 1** YES – logarithmic NO – linear output
RETRANS 2 PARAMETER	TEMP	As for OP1 above	
RETRANS 2 RANGE	4-20mA		
RETRANS 2 SPAN	1000		
RETRANS 2 ZERO	0		
RETRANS 2 HOLD	YES		
RETRANS 2 LOG	NO		
SECURITY CODE	00000	Alter Sec. Code	**Security Code** 00000 to 19999
A1 ALARM PARAMETER	COND	A1 Type	**Alarm 1 Set Point Assignment** COND – assigned to conductivity input TEMP – assigned to temperature input NONE – assigned to neither input
A1 ALARM ACTION	EB	A1 Action	**Relay Action** EA – Energised Above set point EB – Energised Below set point
A1 ALARM LED FLASH	EA	A1 Flash	**L.E.D. Indication** EA – flashes above set point EB – flashes below set point NONE – l.e.d.s disabled
A1 ALARM HYSTERESIS	2%	A1 Differential	**Differential Set Point** Between 0 and 5% of range span, operating about set point
A1 ALARM DELAY	0	A1 Delay	**Relay Action/L.E.D. Indication Delay** 0 to 120 seconds
A1 ALARM SET POINT	500	Alarm A1	**Alarm A1 Set Point** Any value within assigned input range
A1 ALARM HOLD	YES	A1 Hold Mode	**Relay Actuation/L.E.D. Indication Hold** YES – held on operation of 'Hold' switch NO – unaffected on operation of 'Hold' switch
A2 ALARM PARAMETER	COND B	As for A1 above	
A2 ALARM ACTION	EB		
A2 ALARM LED FLASH	EA		
A2 ALARM HYSTERESIS	2%		
A2 ALARM DELAY	0		
A2 ALARM SET POINT	800		
A2 ALARM HOLD	YES		
A3 ALARM PARAMETER	TEMP		
A3 ALARM ACTION	EB		
A3 ALARM LED FLASH	EA		
A3 ALARM HYSTERESIS	2%		
A3 ALARM DELAY	0		
A3 ALARM SET POINT	50 C		
A3 ALARM HOLD	YES		
A4 ALARM PARAMETER	TEMP		
A4 ALARM ACTION	EB		
A4 ALARM LED FLASH	EA		
A4 ALARM HYSTERESIS	2%		
A4 ALARM DELAY	0		
A4 ALARM SET POINT	80 C		
A4 ALARM HOLD	YES		
INPUT ZERO	0	Cond. Zero	**Conductivity Input Zero** 0 to 5,000 units
INPUT SPAN	1000	Cond. Span	**Conductivity Input Full Scale** 0 to 10,000 units
TEMP. ZERO	-10	Temp. Zero	**Temperature Input Zero** -10°C or 14°F
TEMP. SPAN	110	Temp. Span	**Temperature Input Full Scale** 110°C or 230°F

Fig 2.4 Checking the Programme Card Details, Single Conductivity Input Versions (4510 and 4520)

COMPANY STANDARD PROGRAMME		DISPLAY FORMAT	INTERPRETATION
KENT 4500 CONDUCTIVITY TRANSMITTER MODEL 45** FOR **** MOUNTING			**Instrument Version** 4511 – wall mounting or pipe mounting with bracket) 4521 – panel mounting] Differential conductivity input
DESCRIPTION LINE VOLTAGE	STD SET 220/240		**Supply Voltage** 110120V a.c. 220/240V a.c. 10 to 30V d.c.] Set by plug-in link – see **SETTING UP** on page 15
CONDUCTIVITY UNITS	µS/cm	Cond. Units	**Conductivity Input Units** µS/cm – microsiemens/centimetre µS/m – microsiemens/metre mS/cm – millisiemens/centimetre mS/m – millisiemens/metre
CELL CONSTANT A CELL CONSTANT B	K = 0.1 K = 0.1	Cell Constant A Cell Constant B	**Cell Constant** K = 0.01 to 1.0
TEMP. COMPENSATOR A TEMP. COMPENSATOR B	IN IN	Temp. Comp. A Temp. Comp. B	**Temperature Compensation** IN or OUT
TEMP. COEFFICIENT A TEMP. COEFFICIENT B	.020 .020	Temp. Coeff. A Temp. Coeff. B	**Temperature Coefficient** 0%/°C (0.000) to 5%/°C (0.05)
REFERENCE TEMP.	25C	Ref. Temp.	**Reference Temperature** 20°C (68°F) or 25°C (77°F)
UPW TEMP. COMP. A UPW TEMP. COMP. B	OUT OUT	UPW Temp. Comp. A UPW Temp. Comp. B	**Ultra-pure Water Temperature Compensation** IN or OUT
DISPLAY SPAN A DISPLAY SPAN B	1000 1000	Display Span A Display Span B	**Conductivity Range Full Scale** 0.0000 to 10,000 units
DISPLAY ZERO A DISPLAY ZERO B	0 0	Display Zero A Display Zero B	**Conductivity Range Zero** 0.0000 to 5000 units (50% suppressed zero max.)
DIFFERENTIAL SPAN	1000	Adj. Diff. Span	**Differential Span** Any value within assigned conductivity input range
TEMP. UNITS	DEG C	Temp. Units	**Temperature Input Units** DEG C – display in degrees Celsius DEG F – display in degrees Fahrenheit
RETRANS 1 PARAMETER	COND A	Retrans OP1	**Retransmission Output 1 Assignment** COND A – assigned to conductivity input A COND B – assigned to conductivity input B A-B – assigned to conductivity difference A/B – assigned to conductivity ratio TEMP – assigned to temperature input
RETRANS 1 RANGE	4-20mA		**Retransmission Range** 0 to 1mA 0 to 10mA 0 to 20mA 4 to 20mA] Set by plug-in link – see **SETTING UP** on page 15
RETRANS 1 SPAN	1000	OP1 Span	**Retransmission Output 1 Span (Full Scale)** Any value within the assigned input range (conductivity or temperature)
RETRANS 1 ZERO	0	OP1 Zero	**Retransmission Output 1 Zero** Suppressed by up to 90% assigned input range
RETRANS 1 HOLD	YES	OP1 Hold	**Retransmission Output 1 Hold** YES – hold on operation of 'Hold' switch NO – unaffected on operation of 'Hold' switch
RETRANS 1 LOG	NO	OP1 Log	**Logarithmic or Linear Retransmission Output 1** YES – logarithmic NO – linear output
RETRANS 2 PARAMETER RETRANS 2 RANGE RETRANS 2 SPAN RETRANS 2 ZERO RETRANS 2 HOLD RETRANS 2 LOG	COND B 4-20mA 1000 0 YES NO	As for OP1 above	
SECURITY CODE	00000	Alter Sec. Code	**Security Code** 00000 to 19999

Fig 2.5 Checking the Programme Card Details, Differential Input Versions (4511 and 4521)

Continued opposite

continued from previous page

COMPANY STANDARD PROGRAMME		DISPLAY FORMAT	INTERPRETATION
A1 ALARM PARAMETER	COND A	A1 Type	**Alarm 1 Set Point Assignment** COND A – assigned to conductivity input A COND B – assigned to conductivity input B A-B – assigned to conductivity difference A/B – assigned to conductivity ratio TEMP – assigned to temperature input NONE – not assigned to any input
A1 ALARM ACTION	EB	A1 Action	**Relay Action** EA – Energised Above set point EB – Energised Below set point
A1 ALARM LED FLASH	EA	A1 Flash	**L.E.D. Indication** EA – flashes above set point EB – flashes below set point NONE – l.e.d.s disabled
A1 ALARM HYSTERESIS	2%	A1 Differential	**Differential Set Point** Between 0 and 5% of range span. operating about set point
A1 ALARM DELAY	0	A1 Delay	**Relay Action/L.E.D. Indication Delay** 0 to 120 seconds
A1 ALARM SET POINT	500	Alarm A1	**Alarm A1 Set Point** Any value within assigned input range
A1 ALARM HOLD	YES	A1 Hold Mode	**Relay Actuation/L.E.D. Indication Hold** YES – held on operation of 'Hold' switch NO – unaffected on operation of 'Hold' switch
A2 ALARM PARAMETER	COND B	As for A1 above	
A2 ALARM ACTION	EB		
A2 ALARM LED FLASH	EA		
A2 ALARM HYSTERESIS	2%		
A2 ALARM DELAY	0		
A2 ALARM SET POINT	800		
A2 ALARM HOLD	YES		
A3 ALARM PARAMETER	TEMP		
A3 ALARM ACTION	EB		
A3 ALARM LED FLASH	EA		
A3 ALARM HYSTERESIS	2%		
A3 ALARM DELAY	0		
A3 ALARM SET POINT	50 C		
A3 ALARM HOLD	YES		
A4 ALARM PARAMETER	TEMP		
A4 ALARM ACTION	EB		
A4 ALARM LED FLASH	EA		
A4 ALARM HYSTERESIS	2%		
A4 ALARM DELAY	0		
A4 ALARM SET POINT	80 C		
A4 ALARM HOLD	YES		
INPUT ZERO	0	Cond. Zero	**Conductivity Input Zero** 0 to 5,000 units
INPUT SPAN	1000	Cond. Span	**Conductivity Input Full Scale** 0 to 10,000 units
TEMP. ZERO	-10	Temp. Zero	**Temperature Input Zero** -10°C or 14°F
TEMP. SPAN	110	Temp. Span	**Temperature Input Full Scale** 110°C or 230°F

Fig 2.5 Checking the Programme Card Details, Differential Input Versions (4511 and4521)

3 SITING

3.1 Instrument

Select a location:

a) Free from excessive vibration.

b) Within the temperature and humidity limits of -25 to +55°C and 0 to 95%RH.

c) Where the protection ratings are not exceeded:

Wall-/Pipe-mounted instruments – IP65/NEMA 4
Panel-mounted instruments – IP54

d) Away from harmful vapours and/or dripping fluids.

e) At a distance from the conductivity cell not greater than:

50m – cell constant K<0.1
100m – cell constant K≥0.1

f) Preferably at eye-level, allowing an unrestricted view of the front panel displays and controls.

3.2 Conductivity Cell

Select a location:

a) Allowing easy removal of the cell for cleaning.

b) Where the maximum temperature limit is not exceeded:

Model 2025 (dip) – 90°C
Model 2045 (flow) – 100°C
Model 2077 (screw-in epoxy resin) – 100°C
Model 2078 (screw-in stainless steel) – 110°C
Model 2085 (withdrawable) – 110°C

c) Where the maximum pressure limit is not exceeded:

Model 2025 – not applicable
Model 2045 – 7 bar (100 p.s.i.)
Model 2077 – 7 bar (100 p.s.i.)
Model 2078 – 10.5 bar (150 p.s.i.)
Model 2085 – 10.5 bar (150 p.s.i.)

d) Where the cell is not exposed to acid concentrations greater than 6% and alkali concentrations of greater than 8%.

e) Ensuring that the integral cable (where applicable) does not hang against hot or abrasive objects when the plug is connected to the bulkhead socket.

f) Allowing sufficient clearance for removal and replacement of withdrawable cells.

4 MOUNTING

4.1 Wall Mounting – Figs. 4.1 and 4.2

Overall dimensions are shown in Fig. 4.1

The following fixing screws are required for mounting the instrument:

1 x M6 countersunk-head
2 x M6 cheesehead

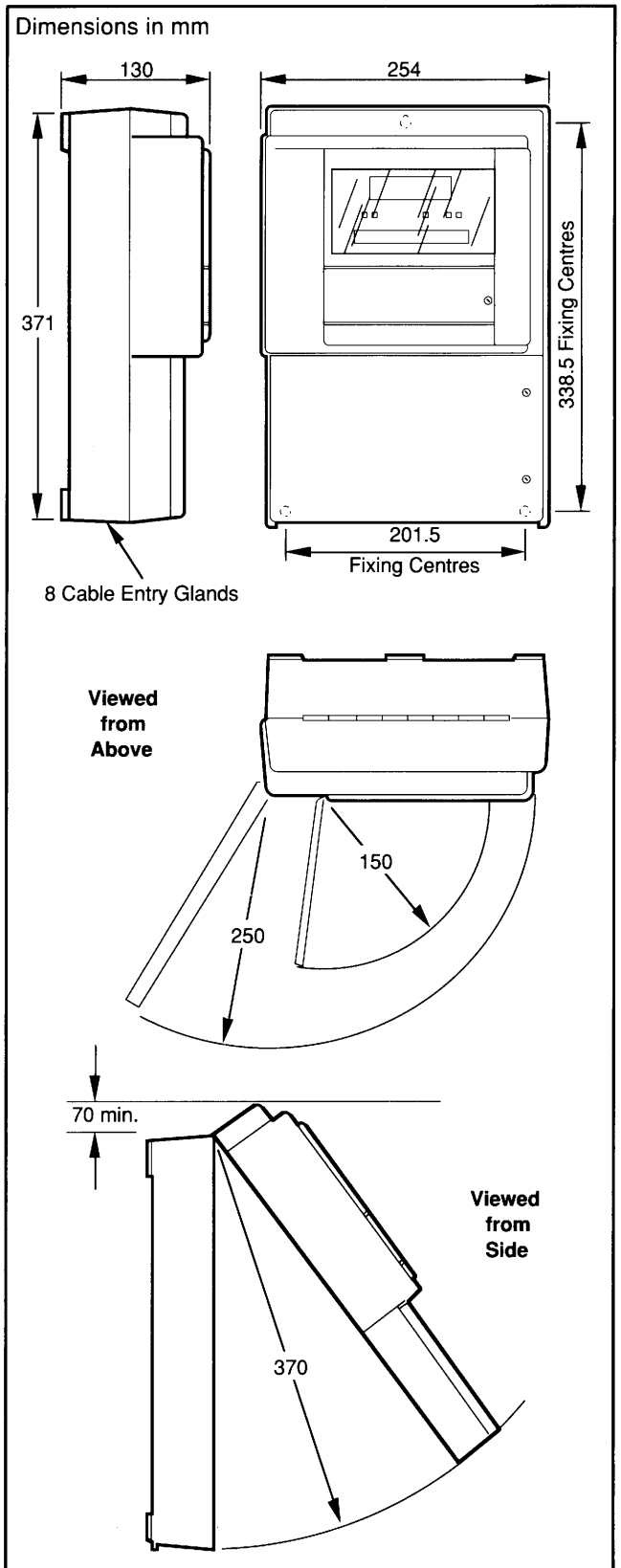

Fig 4.1 Common Overall Dimensions (Wall-/Pipe-Mounted Instruments)

The overall length of the screws used is dependent on the fixing surface material and the mounting method, but note that the countersunk-head screw required for the top centre mounting has to protrude approximately 13mm from the fixing surface (step ②).

Ensure that sufficient head clearance is allowed for opening of the case (Fig 4.1).The instrument weighs approximately 4.5kg.

With reference to Fig. 4.2:

① Mark the fixing centre for the top mounting hole and drill a suitable hole for the fixing to be used.

② Drive the countersunk-head screw into the hole so that 12 to 13mm of the screw shank protrudes from the fixing surface.

③ Hang the instrument on the countersunk-head screw, ensuring that the screw shank is correctly located in the upper part of the keyhole slot.

④ Slacken the two captive quick-release fasteners retaining the terminal protection cover and open the cover, hinged at the left hand edge.

⑤ Mark the fixing centres for the two lower holes, remove the instrument from the wall and drill the holes.

⑥ Repeat step ③ and secure the instrument to the fixing surface using the remaining two screws.

⑦ Close the cover and re-tighten the fasteners.

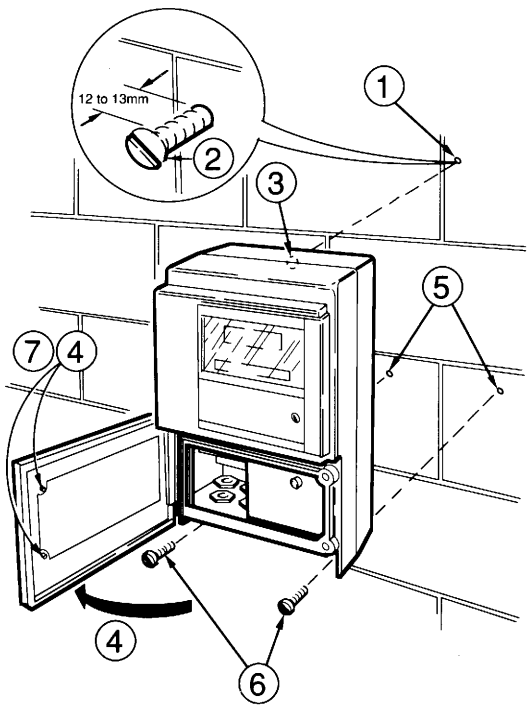

Fig 4.2 Wall Mounting

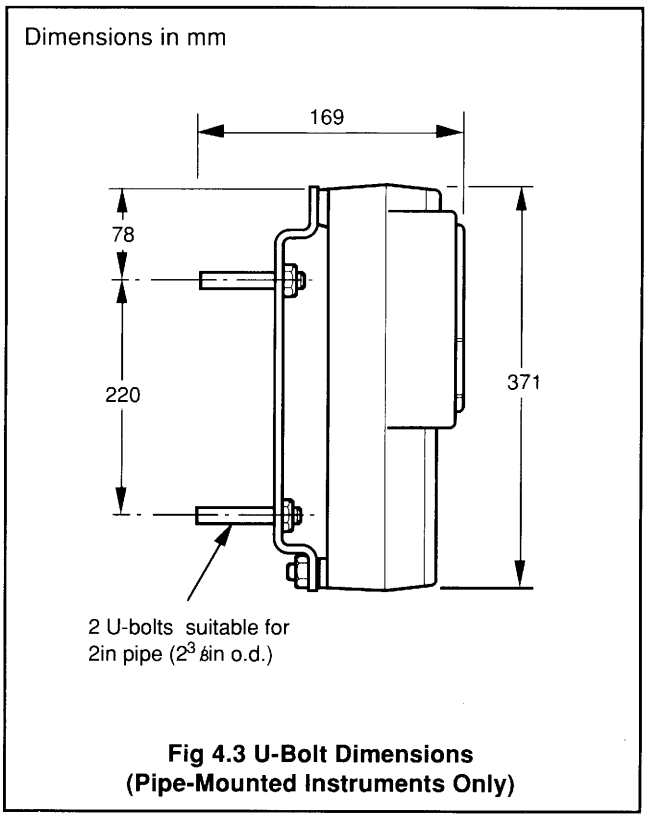

Fig 4.3 U-Bolt Dimensions (Pipe-Mounted Instruments Only)

4.2 Pipe Mounting – Figs. 4.1,4.3 and 4.4

Overall dimensions are shown in Fig. 4.1 (previous page) and U-bolt dimensions in Fig. 4.3. In addition to the pipe-mounting kit (supplied), two M6 x 20 cheesehead screws, with suitable nuts and washers, are also required. The instrument weighs approximately 4.5kg.

With reference to Fig. 4.4:

① Loosely fit the mounting bracket on to the pipe using the two U-bolts (supplied), ensuring that the strengthening plates are located between pipe and bracket.

Note. Ensure that the tapered peg on the bracket is located at the top.

② Position the bracket on the pipe and evenly tighten the U-bolt nuts.

③ Hang the instrument on the bracket peg ensuring that the peg shank is correctly located in the upper part of the keyhole slot.

④ Slacken the two captive quick-release fasteners retaining the terminal protection cover and open the cover, hinged at the left hand edge.

⑤ Secure the instrument to the bracket using the two M6 screws, nuts and washers.

⑥ Close the cover and re-tighten the fasteners.

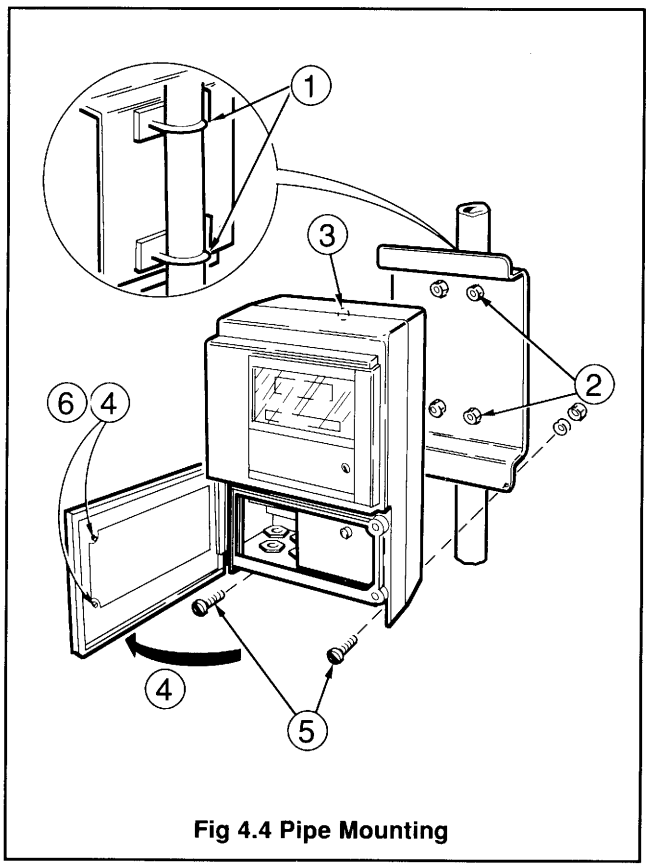

Fig 4.4 Pipe Mounting

4.3 Panel Mounting – Figs. 4.5 and 4.6

Overall dimensions are shown in Fig. 4.5. The instrument weighs approximately 5kg and must be mounted in a panel of 3mm minimum thickness. The instrument may be mounted in any orientation.

With reference to Fig. 4.6:

① Cut square mounting holes. If there is more than one instrument, close stacking to DIN 43835 is possible, but the panel thickness and strength must be considered.

② Release the captive screw retaining the terminal protection cover and remove the cover.

③ Remove the M5 nuts securing the panel clamps to the case and remove the clamps.

④ If the panel is more than 6mm thick, shorten the clamps by an appropriate amount.

⑤ Insert the instrument in the cut-out.

⑥ Refit the panel clamps and tighten the nuts to hold the instrument firmly in position.

4.4 Preparation of Conductivity Cells

Before installing a conductivity cell, clean the electrodes as follows.

4.4.1 Stainless Steel Screw-In and Withdrawable Conductivity Cells

Unscrew the outer electrode and thoroughly clean it with a nylon-bristle brush (supplied) and a warm detergent solution. Clean the central electrode in the a similar manner, taking care not to damage it. For more tenacious deposits a 2% hydrochloric acid solution may be used. Rinse thoroughly with distilled water after cleaning. The electrodes should have a dull, frosted appearance which must not be removed by polishing or abrasive cleaning. Refit the outer electrode.

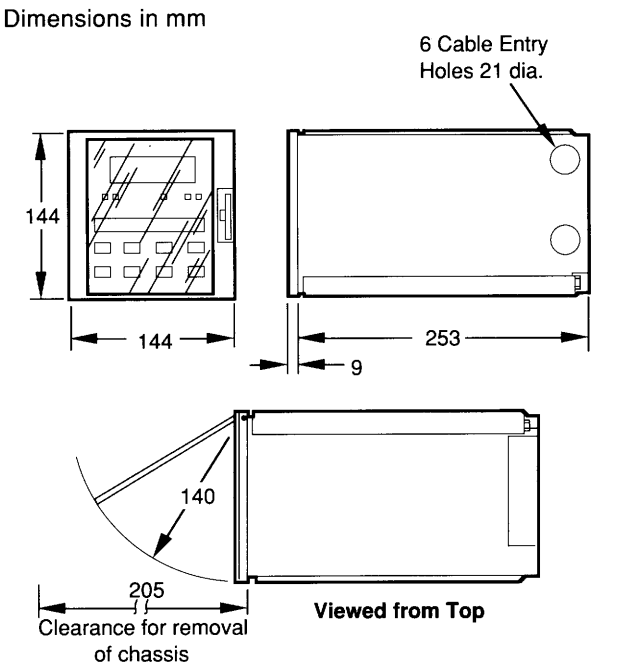

Fig 4.5 Overall Dimensions (Panel-Mounted Instruments)

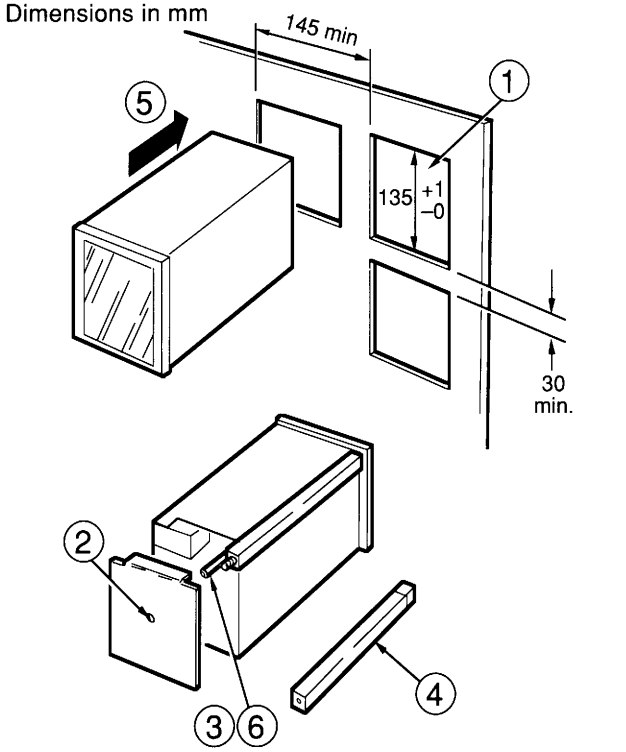

Fig 4.6 Panel Mounting

4.4.2 Epoxy Resin Conductivity Cells

Thoroughly clean the electrode bore with a nylon-bristle brush (supplied) and a warm detergent solution. For more tenacious deposits a 2% hydrochloric acid solution may be used. Thoroughly rinse the cell with distilled water after cleaning and view the bore against a bright light to ensure that the interior surfaces are evenly wetted, i.e. free from grease deposits. Avoid wetting the electrical connection terminals.

4.5 Installation of Conductivity Cells

4.5.1 Dip-type Cell (Model 2025) – Figs. 4.7 and 4.8

With reference to Fig. 4.7:

Slide the plastic-coated wire mounting bracket and retaining 'O' rings to the desired position on the stem of the cell, so that the lower end of the cell is always immersed in the sample fluid. Form the bracket so that it hooks securely over the edge of the tank and ensure that the electrode bore will remain fully immersed at minimum fluid levels. Mount the bulkhead socket at a convenient location close to the cell (Fig. 4.8).

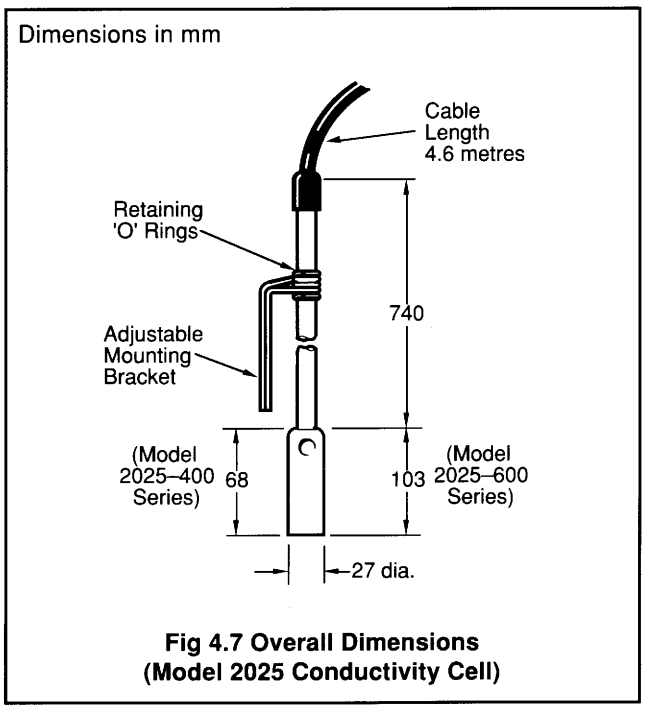

Fig 4.7 Overall Dimensions (Model 2025 Conductivity Cell)

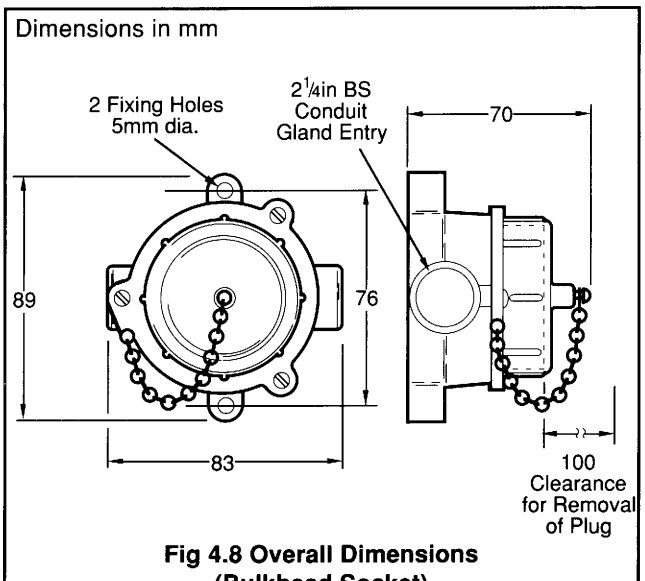

Fig 4.8 Overall Dimensions (Bulkhead Socket)

4.5.2 Flow-line Cell (Model 2045) – Fig. 4.9

Apply a pipe-sealing compound to the ½in. pipe threads and insert the cell directly in-line.

Note. For ½in. BSP process connections a ½in. BSP **parallel** thread form must be used.

Secure the cell to any adjacent flat surface using the two ¼in. BSW screws supplied.

Caution. Ensure that the cell electrodes are not contaminated by the sealing compound when installing the cell.

4.5.3 Screw-in Cells (Models 2077 and 2078) – Figs.4.8,4.10 and 4.11

With reference to Fig. 4.10 or 4.11 as appropriate:

Apply a pipe-sealing compound to the cell threads and screw the cell directly into the pipeline or ready-mounted female bush, as appropriate.

Caution. Ensure that the cell electrodes are not contaminated by the sealing compound when installing the cell.

For stainless steel cells (Model 2078), mount the bulkhead socket at a convenient location close to the cell (Fig. 4.8, previous page).

4.5.4 Withdrawable Cell and Valve Assembly (Models 2085 and 2089) – Figs. 4.8 and 4.12

With reference to Fig. 4.12:

Close the valve by turning the valve adjusting sleeve fully anti-clockwise. Apply a pipe-sealing compound to the 1½in. thread and screw the assembly directly into the pipeline or ready-mounted female bush. Mount the bulkhead socket at a convenient location close to the cell (Fig. 4.8, previous page).

For operation of withdrawable conductivity cells, refer to Section 12.1 on page 45.

Dimensions in mm

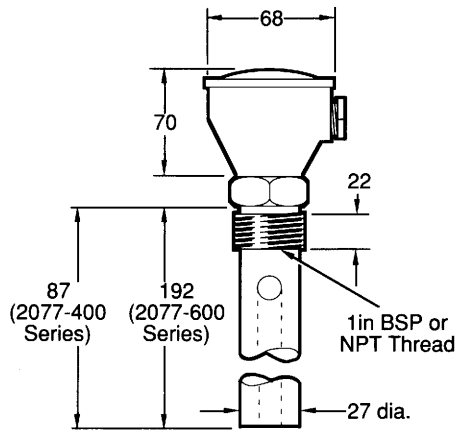

Fig 4.10 Overall Dimensions (Model 2077 Conductivity Cell)

Dimensions in mm

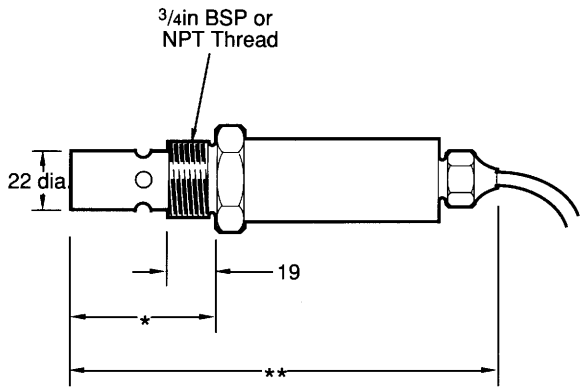

* 57mm (Model 2078-4)
102mm (Model 2078-3)

**144mm (Model 2078-4)
184mm (Model 2078-3)

Fig 4.11 Overall Dimensions (Model 2078 Conductivity Cell)

Dimensions in mm

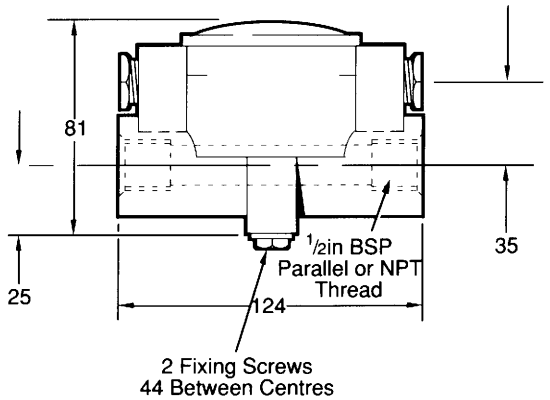

Fig 4.9 Overall Dimensions (Model 2045 Conductivity Cell)

Dimensions in mm

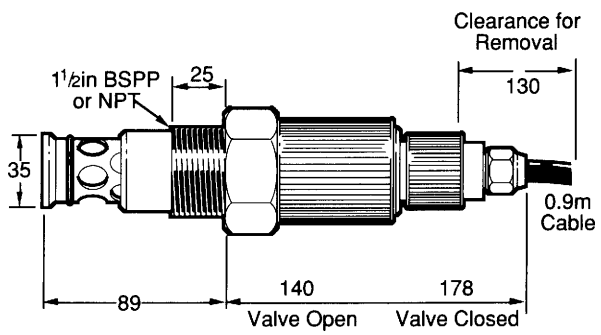

Fig 4.12 Overall Dimensions (Model 2085 Conductivity Cell and 2089 Valve Assembly)

5 ELECTRICAL CONNECTIONS

WARNING. Before making any connections, ensure that the power supply and any high voltage power-operated control circuits are switched off.

5.1 Access to Terminals

5.1.1 Wall-/Pipe-Mounted Instruments – Fig. 5.1

① Slacken the two quick-release fasteners and open the lower panel, hinged at the left hand edge.

② Unscrew the knurled nut and remove the mains/relay terminal protection cover.

5.1.2 Panel-Mounted Instruments – Fig. 5.2

① Unscrew and remove the terminal protection cover.

② Remove the two screws and take off the mains terminal protection cover.

5.2 Making Connections

When making connections note the following:

a) The total conductivity cable length must not exceed 100m (50m if conductivity cell constant K<0.1).

b) Use only the recommended cables, the part numbers of which are as follows:

J/0233/811 – Cell electrodes
J/0233/819 – Temperature compensator

c) Ensure that the cables enter the monitor through the glands nearest the appropriate screw terminals and are short and direct. Do not tuck excess cable into the terminal compartment.

d) The copper braid in the conductivity cell connecting cable **must not** be earthed, or allowed to touch earthed components, and must be cut back to the insulation at the conductivity cell end.

e) Ensure a moisture tight fit when using cable glands, conduit fittings and blanking plugs/bungs (M20 holes). The M16 glands ready-fitted to wall-/pipe-mounted instruments accept cable between 8 and 12mm diameter.

f) Always route signal output/conductivity cell cable leads and mains-carrying/relay cables separately, ideally in earthed metal conduit. Twist the signal output leads together or use screened cable with the screen connected to the case earth stud.

g) The integral cable may be extended using a suitable junction box, but the total maximum cable length detailed in a) still applies.

h) The relay contacts are voltage-free and must be appropriately connected in series with the power supply and the alarm/control device which they are to actuate. Ensure that the contact rating is not exceeded – see Section 11, page 43.

i) Do not exceed the maximum load specification for the selected current retransmission range – see Section 6, page 15 and Section 11, page 43.

Make connections as detailed in Table 3 (wall-/pipe-mounted instruments) or Table 4 (panel-mounted instruments), overleaf.

Replace all covers on completion – see Section 5.1 above.

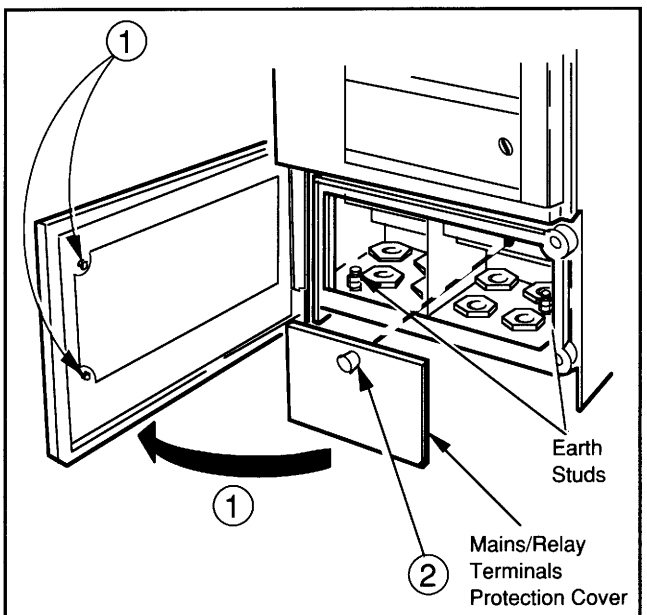

Fig 5.1 Access to Terminals (Wall-/Pipe-Mounted Instruments)

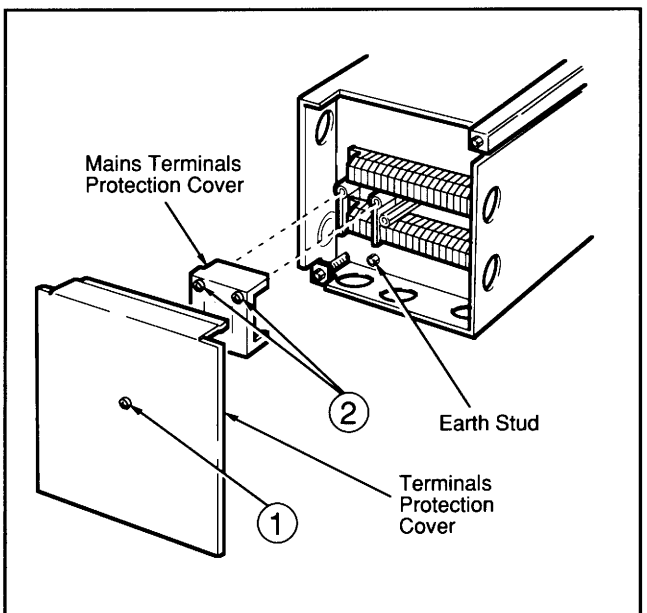

Fig 5.2 Access to Terminals (Panel-Mounted Instruments)

Terminal Number	Connections
	Temperature Compensator
1	Green/Yellow
2	Brown
3	Blue
4	—
	Output 2
5	+] Retransmission Output 2
6	–] Retransmission Output 2
7 to 10	—
	Relays
11	Normally Closed] Relay 1*
12	Normally Open] Relay 1*
13	Common] Relay 1*
14	Normally Closed] Relay 2*
15	Normally Open] Relay 2*
16	Common] Relay 2*
17	Normally Closed] Relay 3*
18	Normally Open] Relay 3*
19	Common] Relay 3*
20	Normally Closed] Relay 4*
21	Normally Open] Relay 4*
22	Common] Relay 4*

*Contacts shown with relay in de-energised state

Terminal Number	Connections
	Conductivity Cell
23	White] Dip-type (2025)] Fig 5.3] Single Input or Input A
24	Braid] Screw-in stainless (2078)] Fig 5.3] Single Input or Input A
25	Black] Withdrawable (2085)] Fig 5.3] Single Input or Input A
	Flow-line (2045) — Fig 5.4] Single Input or Input A
	Screw-in epoxy (2077) — Fig 5.5] Single Input or Input A
26	—
27	White] Dip-type (2025)] Fig 5.3] Input B (4511 only)
28	Braid] Screw-in stainless (2078)] Fig 5.3] Input B (4511 only)
29	Black] Withdrawable (2085)] Fig 5.3] Input B (4511 only)
	Flow-line (2045) — Fig 5.4] Input B (4511 only)
	Screw-in epoxy (2077) — Fig 5.5] Input B (4511 only)
30	—
	Output 1
31	+] Retransmission Output 1
32	–] Retransmission Output 1
33 to 35	—

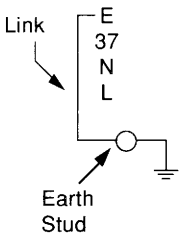

Power Supply	
Mains Powered	**D.C. Powered**
—	Gnd —
—	37 —
Neutral	– Negative
Line	+ Positive
Earth	Earth

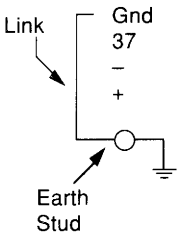

Table 3 Wall-/Pipe-Mounted Instrument Connections

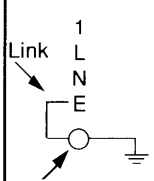

Terminal Number	Connections	
	Power Supply	
	Mains Powered	**D.C. Powered**
1	—	1 —
L	Line	+ Positive
N	Neutral	– Negative
E	—	Gnd —
	Earth	Earth
5	—	
	Relays	
6	Common] Relay 1*	
7	Normally Open] Relay 1*	
8	Normally Closed] Relay 1*	
9	Common] Relay 2*	
10	Normally Open] Relay 2*	
11	Normally Closed] Relay 2*	
12	Common] Relay 3*	
13	Normally Open] Relay 3*	
14	Normally Closed] Relay 3*	
15	Common] Relay 4*	
16	Normally Open] Relay 4*	
17	Normally Closed] Relay 4*	
18 to 20	—	

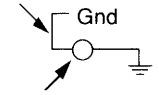

*Contacts shown with relay in de-energised state

Terminal Number	Connections
	Conductivity Cell
21	White] Dip-type (2025)] Fig 5.3] Single Input or Input A
22	Braid] Screw-in stainless (2078)] Fig 5.3] Single Input or Input A
23	Black] Withdrawable (2085)] Fig 5.3] Single Input or Input A
	Flow-line (2045) — Fig 5.4] Single Input or Input A
	Screw-in epoxy (2077) — Fig 5.5] Single Input or Input A
24	—
25	White] Dip-type (2025)] Fig 5.3] Input B 4521 only)
26	Braid] Screw-in stainless (2078)] Fig 5.3] Input B 4521 only)
27	Black] Withdrawable (2085)] Fig 5.3] Input B 4521 only)
	Flow-line (2045) — Fig 5.4] Input B 4521 only)
	Screw-in epoxy (2077) — Fig 5.5] Input B 4521 only)
28	—
	Temperature Compensator
29	Green/Yellow
30	Brown
31	Blue
32	—
	Outputs
33	+] Retransmission Output 1
34	–] Retransmission Output 1
35, 36	—
37	+] Retransmission Output 2
38	–] Retransmission Output 2
39, 40	—

Table 4 Panel-Mounted Instrument Connections

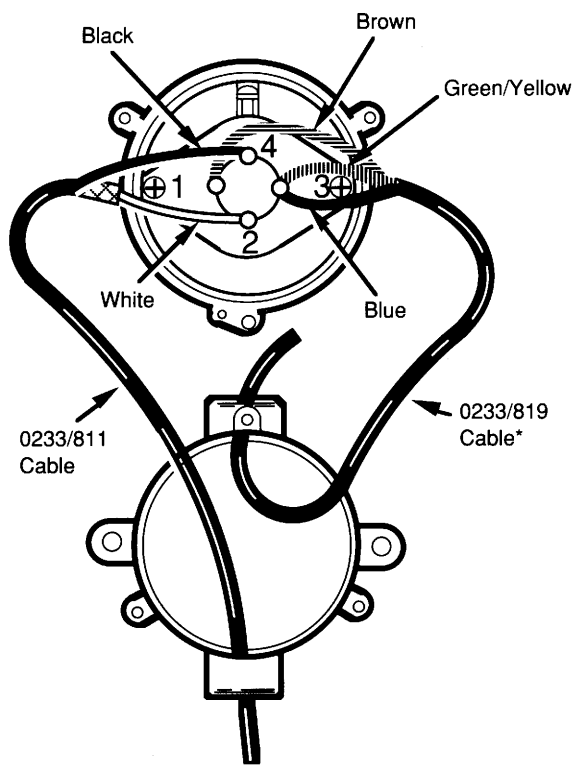

Fig 5.3 Bulkhead Socket Connections (Models 2025, 2078 and 2085)

* Required only when using temperature compensator.

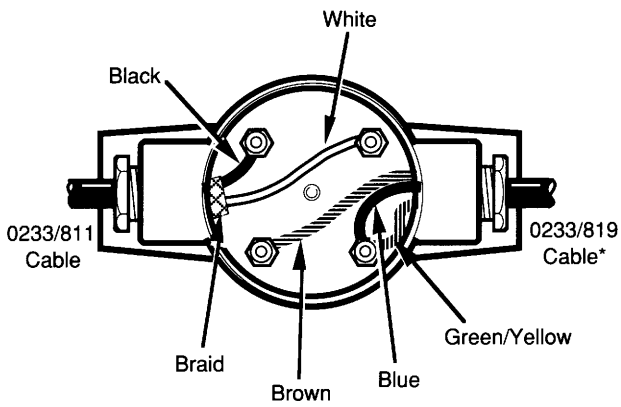

Fig 5.4 Conductivity Cell Connections (Model 2045)

* Required only when using temperature compensator.

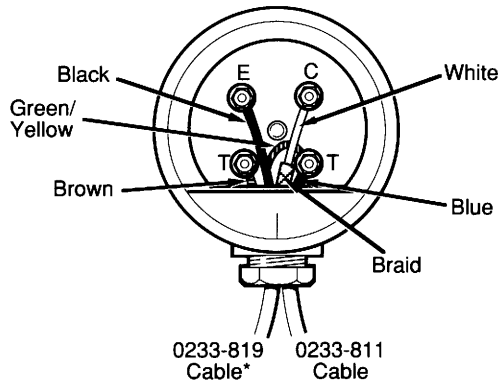

Fig 5.5 Conductivity Cell Connections (Model 2077)

* Required only when using temperature compensator.

6 SETTING UP

WARNING. Switch off the supply and any high voltage or power-operated control circuits.

6.1 Selecting the Mains Input Voltage – Fig. 6.1

The mains input voltage (110V or 240V) is selected by repositioning a plug-in 'handbag' link on the power supply p.c.b.

6.1.1 Wall-/Pipe-Mounted Instruments

Open the lower panel and remove the mains/relay terminal protection cover (Fig. 5.1, page 13).

With reference to Fig. 6.1:

① Position the link for the mains input voltage required.

Refit the protection cover and secure the lower panel.

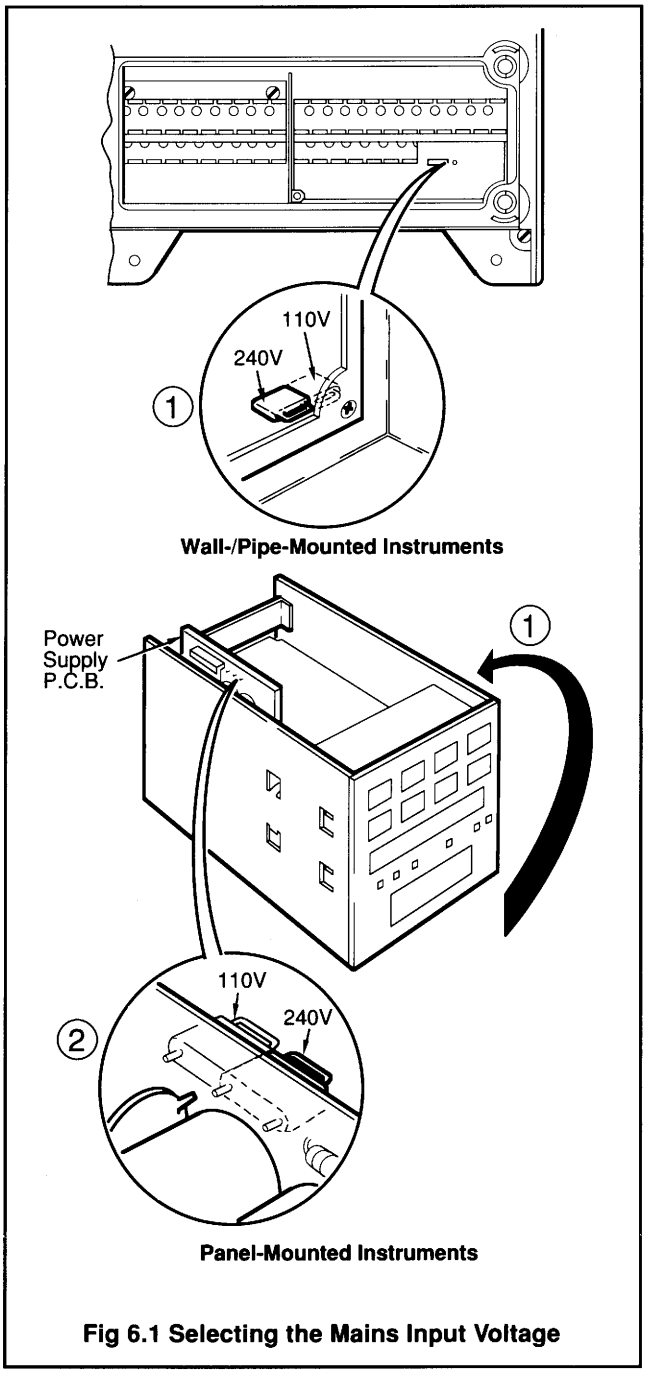

Fig 6.1 Selecting the Mains Input Voltage

6.1.2 Panel-Mounted Instruments

Open the door and remove the chassis from the case (Fig. 2.2, page 3).

With reference to Fig. 6.1, previous page:

① Invert the chassis and identify the power supply p.c.b.

② Position the link for the mains input voltage required.

Refit the chassis into the case and tighten the retaining screw.

6.2 Selecting the Current Output Range

The current output range is selected by repositioning a plug-in link on the relevant retransmission p.c.b. One of four ranges may be selected: 0 to 1mA, 0 to 10mA, 0 to 20mA or 4 to 20mA.

6.2.1 Wall-/Pipe-Mounted Instruments – Fig. 6.2a

Open the lower panel (Fig. 2.1, page 3).

With reference to Fig. 6.2a:

① Release the two captive screws to free the front section of the case.

② Lift up the front section, hinged at the upper edge, until it is supported by the stay on the right hand side.

③ Remove the three screws and lift off the p.c.b. protection plate.

Note. The plate is earthed via the steel screw and shakeproof washer fitted in the lowest fixing hole.

④ Identify the retransmission (output) p.c.b.(s):

Module 1 provides the retransmission 1 output (current only)

Module 2 provides the retransmission 2 output (either current or serial data)

Check the instrument code number to identify the type of module(s) fitted – see Section 2 on page 2

⑤ Unplug the relevant p.c.b.(s) from the main board.

⑥ Position the link(s) for the current output(s) required.

Refit the p.c.b.(s) and the protection plate, ensuring that the steel screw and shakeproof washer are used in the lowest fixing hole. Close and secure the front section and the lower panel.

6.2.2 Panel-Mounted Instruments – Fig . 6.2b

Open the door and remove the chassis from the case (Fig. 2.2, page 3).

With reference to Fig. 6.2b:

① Remove the p.c.b. tie-bar.

② Identify the retransmission (output) p.c.b.(s):

Module 1 provides the retransmission 1 output (current only)

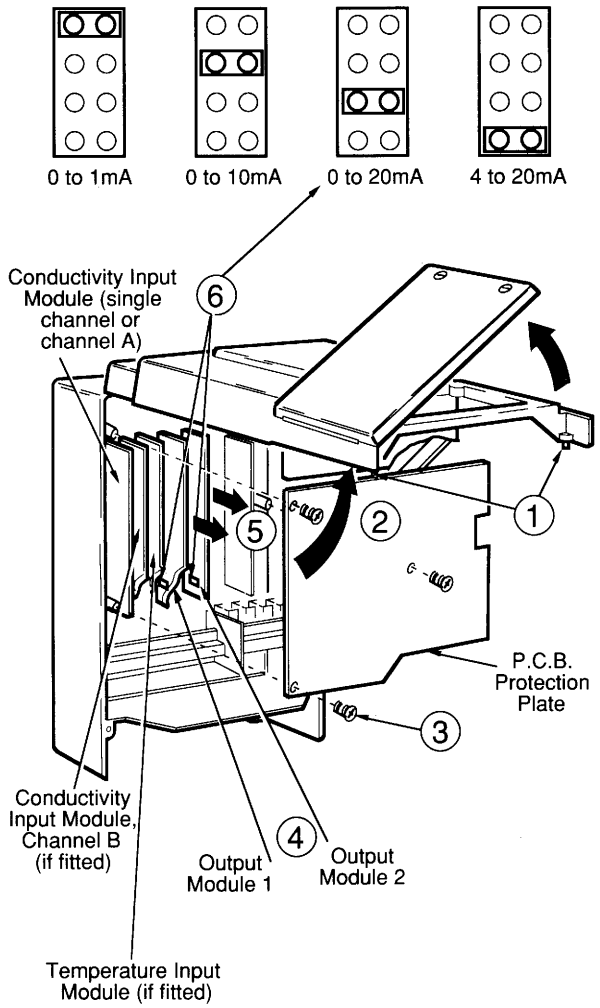

Fig 6.2a Selecting the Current Output Range, Wall-/Pipe-Mounted Instruments

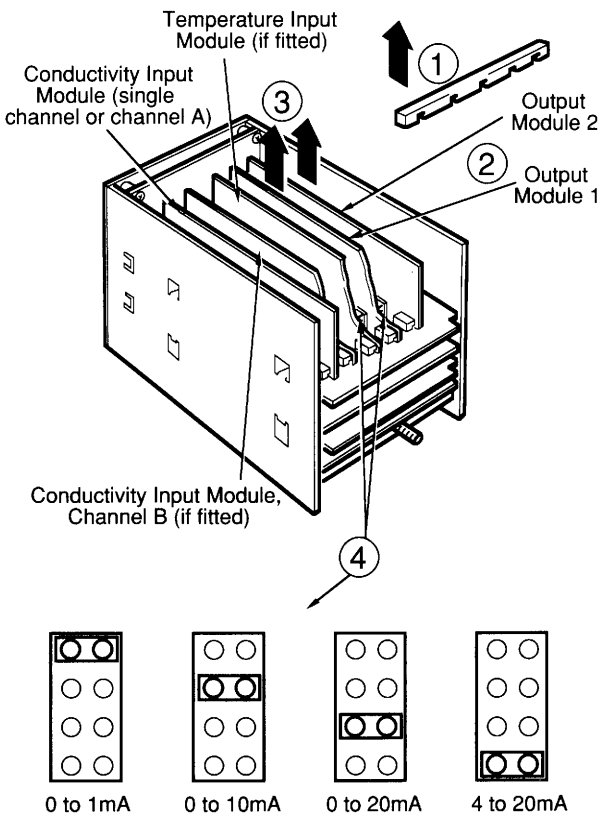

Fig 6.2b Selecting the Current Output Range, Panel-Mounted Instruments

Module 2 provides the retransmission 2 output (either current or serial data)

Check the instrument code number to identify the type of module(s) fitted – see Section 2,

③ Unplug the relevant p.c.b.(s) from the top board.

④ Position the link(s) for the current output(s) required.

Refit the p.c.b.(s) and the tie-bar. Refit the chassis into the case and tighten the retaining screw.

7 FAMILIARISATION WITH CONTROLS, DISPLAYS AND L.E.D. INDICATION

The programme controls, digital and dot-matrix displays and alarm indication and 'hold' l.e.d.'s are all mounted on the front panel of the instrument.

7.1 Programme Controls – Fig. 7.1

The programme controls comprise eight tactile membrane switches, the functions of which are identical on all instrument versions.

7.1.1 Access to Controls, Wall-/Pipe-Mounted Instruments

Referring to Fig. 7.1:

① Release the single quick-release fastener retaining the upper panel and open the panel, hinged at the left hand edge.

7.1.2 Access to Controls, Panel-Mounted Instruments

Referring to Fig. 7.1:

① Unlock and open the door, hinged at the left hand edge.

7.1.3 Functions of Membrane Switches

In normal operation the switches are used to view the measured conductivity, the sample temperature, the alarm set points or to activate the 'alarm hold' facility.

When programming, the switches are used to sequence through a programming procedure as detailed in Section 8.4 on page 20 (models 4510 and 4520) or Section 8.5 on page 29 (models 4511 and 4521).

The procedure is set out in **programme pages** for Input, Display, Retransmission, Alarms, Set Points and Calibration – see Fig. 8.1, page 19 or Fig. 8.2, page 28. Each programme page contains the **programme functions**, the values or parameters of which are programmable.

Switch functions are as follows:

Cond Temp **'Function'** Switch – used for **viewing** the conductivity units or the sample temperature on alternate operations of the switch – see **Operating Page 1**, Fig. 8.1 or 8.2.

Set Point **'Set point'** Switch – used for **viewing** the four alarm set points, A1 to A4 – see **Operating Page 2**, Fig. 8.1 or 8.2.

Hold **'Hold'** Switch – used to inhibit any change in the alarm relay/l.e.d. status and maintain the retransmission output at its existing level, providing their functions have been selected when programming. The hold facility is switched in ('Hold' l.e.d. illuminated) and out on alternate operations of the switch.

Note. If the hold facility is inadvertently left switched-in, it is automatically cancelled after a period of approximately 20 minutes has elapsed.

Enter **'Enter'** Switch – used for storing the programmed function parameters and values into the instrument's non-volatile memory.

Note. The instrument responds instantly to any programme change but the new function is lost in the event of a power interruption (or during power-down) if it has not been 'Enter'ed.

'Parameter Advance' Switch – used for selecting a particular parameter from a programme page – see Figs. 8.1 and 8.2.

▲ **'Raise'** Switch – used for increasing a parameter value or stepping-up through a selection of parameters applicable to a particular function.

Continued overleaf

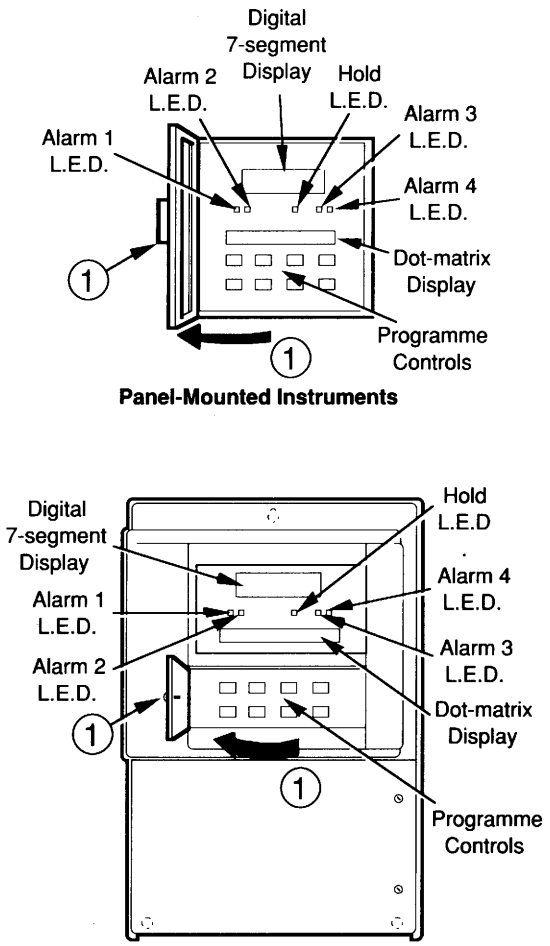

Fig 7.1 Familiarisation With Controls, Displays and L.E.D. Indication

▼ **'Lower'** Switch – used for decreasing a parameter value or stepping-down through a selection of parameters applicable to a particular function.

Note. Continued pressure on the 'Raise' or 'Lower' Switches causes the rate of change of the displayed value to increase. To make small adjustments, press the switches momentarily.

↶ **'Page Advance'** Switch – used after initial switch-on for gaining access to the security code and for selection of individual programme pages – see Figs. 8.1 and 8.2.

7.2 Displays – Fig. 7.1, previous page

There are two displays; a 5-digit, 7-segment digital display and a 20-character, 7 x 5 dot-matrix display.

In single conductivity input models, the upper, **seven-segment** display indicates the conductivity value while Operating Page 1 is being displayed. The associated units can be viewed on the lower, dot-matrix display.

In differential input models, the upper display shows conductivity A or B, conductivity A-B or the ratio of conductivity A to conductivity B. The actual mode and the associated units can be viewed on the dot-matrix display.
At other times, no value is displayed.

The lower, **dot matrix**, display can be used for displaying:

a) the conductivity units (microsiemens/cm,millisiemens/cm etc.)

b) the sample temperature (when using temperature compensated measuring cells only)

c) the alarm set points

d) parameters to be changed during a programming sequence

e) error messages

7.3 L.E.D. Indication

Flashing l.e.d.s, one for each set point, are used for **Alarm Indication**. There are always four Alarm l.e.d.s, irrespective of the number of relays fitted, each of which can be allocated to either the temperature or the conductivity input (models 4510 and 4520) or conductivity input A, conductivity input B, A-B or A/B (models 4511 and 4512) or switched off.

The **Hold** l.e.d. is illuminated when any change in the alarm/relay status has been inhibited by use of the 'Hold' switch, e.g. during calibration.

8 PROGRAMMING

The programming sequence is used to make changes to the operating function parameters/values or for calibration.

Before changing the programme, check the electrical connections (page 13) and carry out the setting up procedure (page 15). Switch on the supply and allow approximately 20 seconds for the circuits to stabilise. The l.e.d.'s are illuminated for approximately 5 seconds and the display reverts to '88888' as a functional check.

8.1 Normal Operation

In normal operation (Operating Page 1), for models 4510 and 4520 the lower, dot matrix display, indicates the programmed conductivity units followed by the sample temperature. For models 4511 and 4521, the display indicates the programmed conductivity units together with the conductivity function (conductivity A, conductivity B, A-B or A/B), the value of which is shown on the upper, 7-segment display. Selection is made by means of the 'Parameter Advance' switch. Operation of the 'Set Point' switch gives access to a second operating page (Operating Page 2) in which the set points can be viewed. Either 'page' can be selected at any time by operating the appropriate switch ('Function' or 'Set Point').

8.2 Programming Pages

Operation of the 'Page Advance' switch enables a series of 'programming' pages to be displayed. Unauthorised access to the programming pages is inhibited by a 5-digit security code which must be selected immediately after the first operation of the 'Page Advance' switch (see Figs. 8.1 and 8.2 on pages 19 and 28 respectively).

In the programming pages, displayed values indicated 'xxxxx' are for viewing only and cannot be altered by the operator. Displayed values indicated '- - - - - ' can be altered by means of the 'Raise' and 'Lower' switches. When the desired reading is displayed, operate the 'Enter' switch. The l.e.d.'s will flash momentarily to indicate that the value has been stored in the non-volatile memory. Although the instrument appears to operate satisfactorily if the 'Enter' switch is not operated, in the event of power interruption the programmed values are lost. If previously programmed values are to be viewed only, it is unnecessary to operate the 'Enter' switch.

8.3 Error Messages

The instrument incorporates an automatic self-diagnostic checking facility for detection of input and output errors. If such a fault occurs, one of the following error messages appears on the dot matrix display:

Non Vol Error at (1-64)*
Chan A input error
Chan A comp.(compensation) error
Chan A ref.(reference) error
Chan A disp.(display) error
Chan B input error
Chan B comp.(compensation) error
Chan B ref.(reference) error
Chan B disp.(display) error
Temp. input error
PRT (platinum resistance thermometer) out of limits
Temp. ref.(temperature reference) error
Third lead error
Relay code error
RTX1 (retransmission 1) code error
RTX2 code error

* If this message is displayed, contact the Service Centre.

Note. If a temperature compensator is not connected, or if the temperature module is not fitted, the temperature input must be switched out to cancel the error message, i.e. by setting 'Temp. Comp. OUT' – see Section 8.4.3 or 8.5.3, as appropriate.

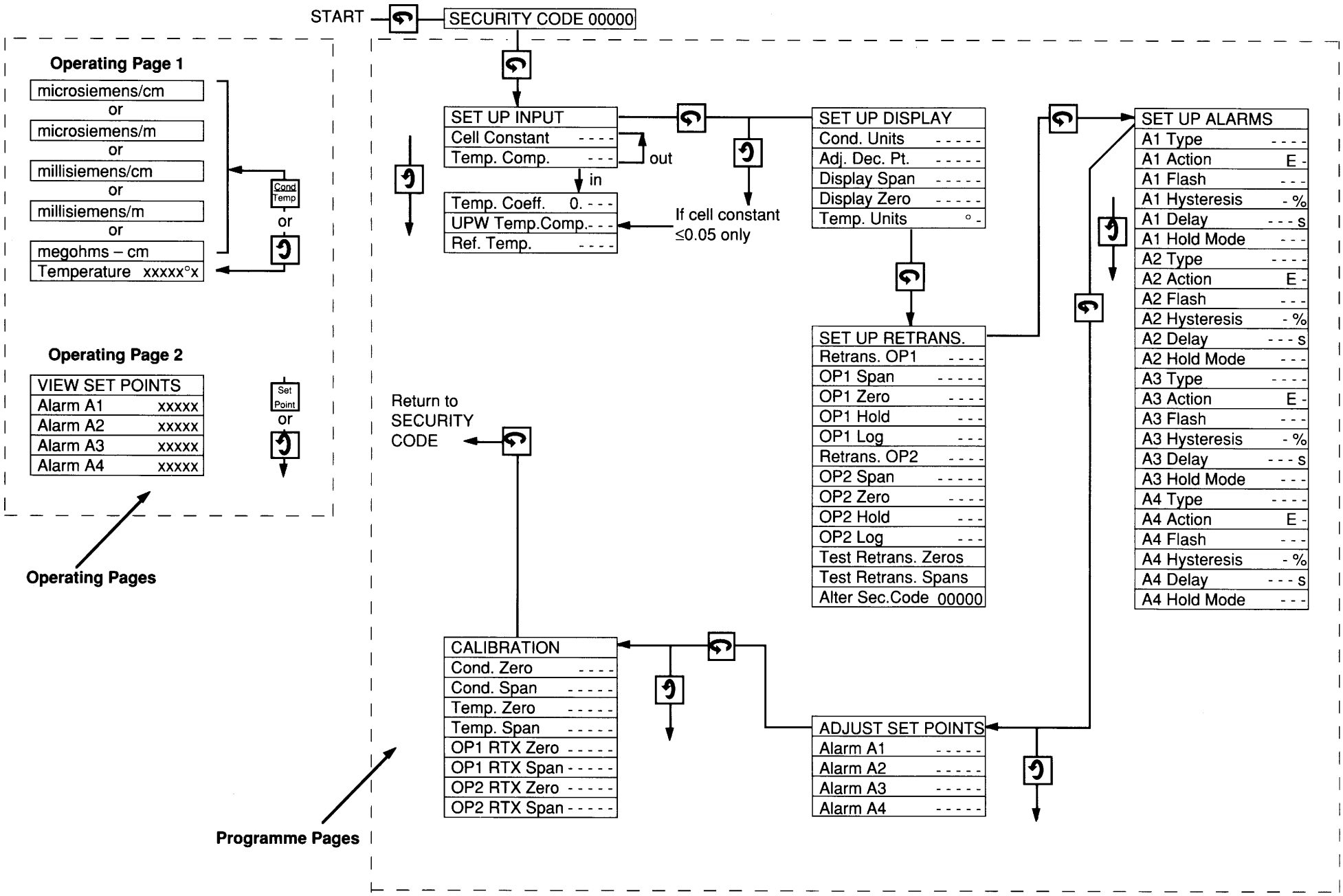

Fig 8.1 Programme Chart, Single Conductivity Input Versions (4510 and 4520)

8.4 Single Input Version (Model 4510 and 4520) – Fig 8.1, previous page

8.4.1 Operating Pages

The values displayed in the operating pages are for viewing only and cannot be altered by the operator.

a) **Operating Page 1**

Parameters within this page can be accessed using either the 'Function' switch or the 'Parameter Advance' switch. The 'Function' switch is shown for example only.

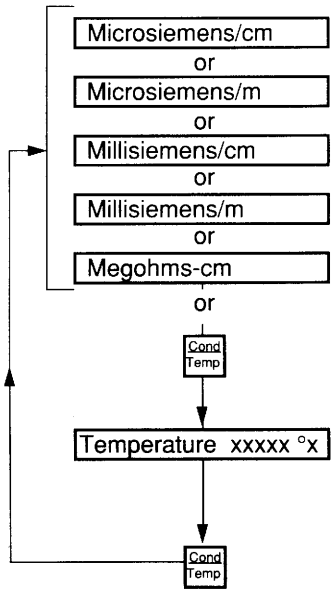

Conductivity Units
The conductivity units are displayed (any of five variants). The units are programmable within the limits outlined in Table 5, opposite – see 'SET UP DISPLAY' page, Section 8.4.4.

Display sample temperature (when making temperature-compensated measurements only).

Sample Temperature
The sample temperature is displayed. The display units (°C or °F) are programmable – see 'SET UP DISPLAY' page, Section 8.4.4.

Return to display of **Conductivity Units.**

b) **Operating Page 2**

To gain access to this page at any time, operate the 'Set Point' switch.

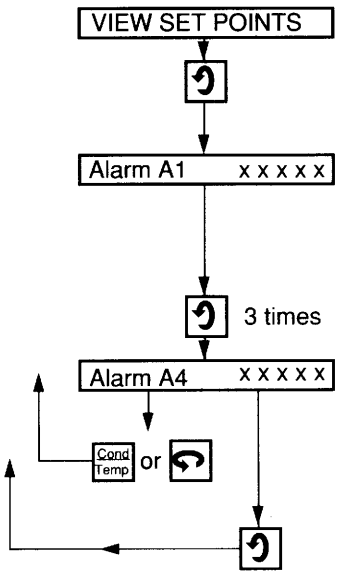

Page Header.
Subsequent parameters within the page can be accessed using either the 'Set Point' or the 'Parameter Advance' switch. The 'Parameter Advance' switch is shown for example only.

Alarm A1 Set Point
The set point value for alarm A1 is displayed. The set point functions, EA or EB, and the values are entered in the 'SET UP ALARMS' and 'ADJUST SET POINTS' pages respectively – see Sections 8.4.6 and 8.4.7.

Sequence through the displays of set points A2 to A4.

To return to Operating Page 1, operate either the 'Function' switch or the 'Page Advance' switch

Return to top of 'VIEW SET POINTS' page.

8.4.2 Security Code

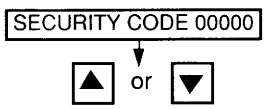

Select the previously known security code (00000 to 19999). If an incorrect value is entered, access to subsequent programming pages is barred. The security code can be altered in the 'SET UP RETRANS' pages – see Section 8.4.5.

8.4.3 Setting Up the Input

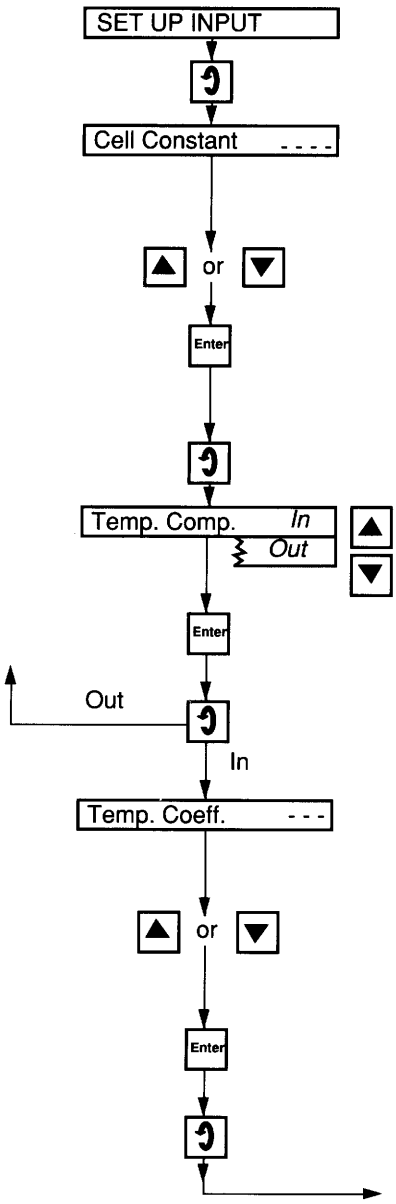

Page Header.

Advance to next parameter.

Conductivity Cell Constant (K)
The cell constant determines the limits for the conductivity range and units – see Table 5, below.

Set the cell constant in accordance with that of the measuring cell used – see Section 2 on page 2.

Store.

Advance to next parameter.

Temperature Compensation.
Temperature compensation for fluctuations in the sample temperature can be switched either in or out, as required.

Store.

Return to top of 'SET UP INPUT' page if 'Out' selected.
Advance to next parameter if 'In' selected.

Temperature Coefficient
If it is unknown, the temperature coefficient of the solution can be calculated – see Section 12.2.1 on page 46.

Adjust the displayed value to the temperature coefficient of the solution (0.000 to 0.050). If the value has not yet been calculated, provisionally set it to 2%/°C (0.020).
Note. Always displayed per °C.

Store.

Advance to next parameter.

Continued overleaf.

Conductivity Cell Constant (K)	Minimum Conductivity Range	Minimum Span	Maximum Conductivity Range
0.01	0 to 0.1µS/cm 0 to 10µS/m 0 to 0.01mS/m 20 to 2MΩ-cm	0.1µS/cm 10µS/m 0.01mS/m 18MΩ-cm	0 to 100µS/cm 0 to 10,000µS/m 0 to 10mS/m 20 to 2MΩ-cm
0.05	0 to 0.5µS/cm 0 to 50µS/m 0 to 0.05mS/m 20 to 2MΩ-cm	0.5µS/cm 50µS/m 0.05mS/m 18MΩcm	0 to 500µS/cm 0 to 10,000µS/m 0 to 50mS/m 20 to 2MΩ-cm
0.1	0 to 1µS/cm 0 to 100µS/m 0 to 0.1mS/m	1µS/cm 100µS/m 0.1mS/m	0 to 1,000µS/cm 0 to 10,000µS/m 0 to 100mS/m
1.0	0 to 10µS/cm 0 to 1,000µS/m 0 to 0.01mS/cm 0 to 1mS/m	10µS/cm 1,000µS/m 0.01mS/cm 1mS/m	0 to 10,000µS/cm 0 to 10,000µS/m 0 to 10mS/cm 0 to 1,000mS/m

For cells with a constant (K) other than those specified, the conductivity range limits can be calculated from the following:
Minimum conductivity range – K x 10 (µS/cm)
Minimum span – K x 10 (µS/cm)
Maximum conductity range – K x 10,000 (µS/cm)

Table 5 Conductivity Range Limits for Different Cell Constants (K)

(continued from previous page.)

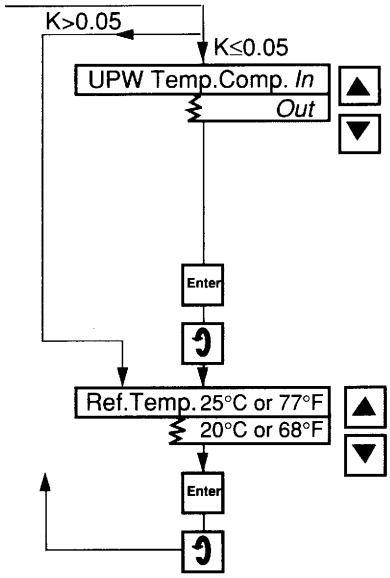

Ultra-pure Water (U.P.W.) Temperature Compensation
Additional temperature compensation may be required if the sample conductivity approaches that of ultra-pure water, i.e. low conductivity (see APPENDIX 2 on page 46). This feature can only be utilised when using one of the Kent range of ultra-pure water conductivity cells with a cell constant (K) of ≤0.05. Select u.p.w. temperature compensation 'In' or 'Out'.

Store.

Advance to next parameter.

Reference Temperature
Select the reference temperature required.

Store.

Return to top of 'SET UP INPUT' page.

8.4.4 Setting Up the Display

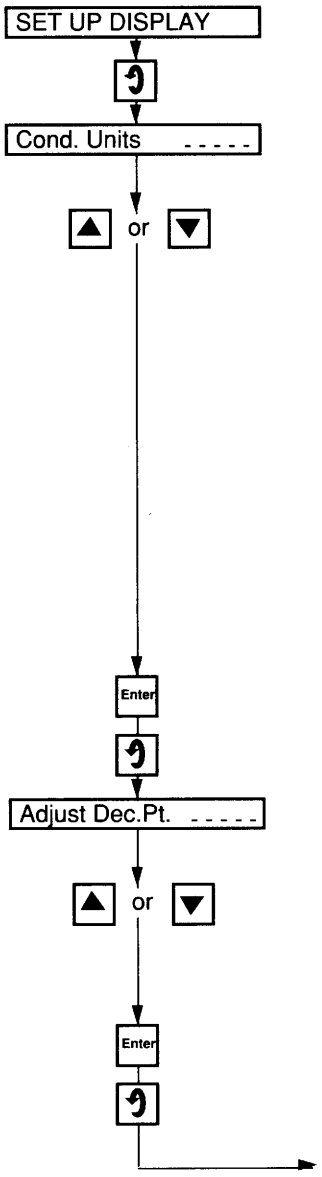

Page Header.

Advance to next parameter.

Conductivity Units
The conductivity units can be programmed to suit the range required.

Select from:	Millisiemens/m	(mS/m)
	Millisiemens/cm	(mS/cm)
	Microsiemens/m	(µS/m)
	Microsiemens/cm	(µS/cm)
	Megohms-cm	(MΩ-cm)

The choice of units must ensure that the programmed range does not exceed the display limit, i.e. 10,000.

Note. Conductivity unit selections are limited by the conductivity range and the cell constant – see Table 5, page 21. Invalid units are denoted by a '?' in the selection.

Example – for a cell constant of 1.0 and a required range of 0 to 50,000µS/cm:

0 to 50,000µS/cm would exceed display limits
0 to 50.00mS/cm or 0 to 5,000µS/m are within the display limits.

Store.

Advance to next parameter.

Decimal Point Position

Set the decimal point position to obtain the required resolution for the chosen conductivity range. Ignore the displayed value.

Example – for a range of 0 to 500µS/cm set the decimal point to 'xxx.x' or 'xxx.'.

Store.

Advance to next parameter.

continued opposite.

(continued from previous page.)

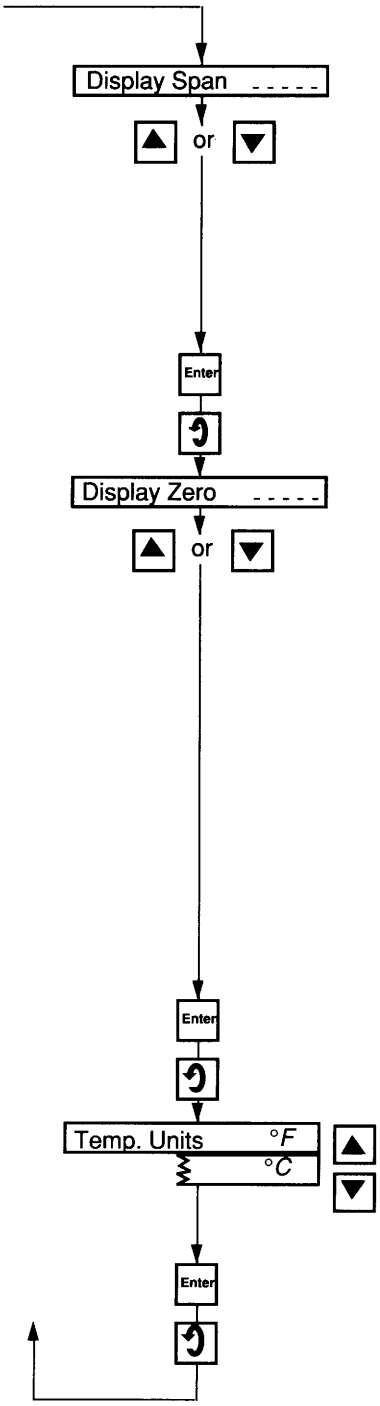

Display Span (Full Scale)

Set the full scale conductivity value required, ensuring that it is within the limits dictated by the previously programmed cell constant – see 'SET UP INPUT' page on page 21.

Example – for a range of 0 to 500µS/cm, set to 500.0 or 500.
Note: If the selected conductivity units are MΩ-cm, the display span is automatically set to 2.00.

Store.

Advance to next parameter.

Display Zero

Set the zero conductivity value required. For the above **Example**, set to 0.
Note: If the selected conductivity units are MΩ-cm, the display zero is automatically set to 2.00

Suppressed zero ranges are permitted up to 50% span.

Example– for a range of 0 to 500µS/cm a zero value up to 250µS/cm is permissible.

Note. When using a suppressed zero range the displayed conductivity is derived from the measured conductivity minus the programmed display zero, i.e. the conductivity relative to the suppressed zero, not the absolute conductivity. This feature is particularly useful when monitoring very low conductivity levels, since the ultra-pure water content (0.055µS/cm) is accounted for and the displayed value is that of the impurities present, e.g. 0.057µS/cm is displayed as 0.002µS/cm. For display of the actual measured conductivity (absolute), use a zero-based range.

Store.

Advance to next parameter.

Temperature Units
When making temperature-compensated measurements, the sample temperature (and reference temperature) can be displayed as either Fahrenheit or Celsius. Select °F or °C.

Store.

Return to top of 'SET UP DISPLAY' page.

8.4.5 Retransmission Assignment

The retransmission outputs can be assigned to either the conductivity or the temperature input, but are only operative if the relevant modules are fitted. Refer to Table 1, **Interpretation of Instrument Code Number**, on page 3 to determine which output(s) require(s) programming.

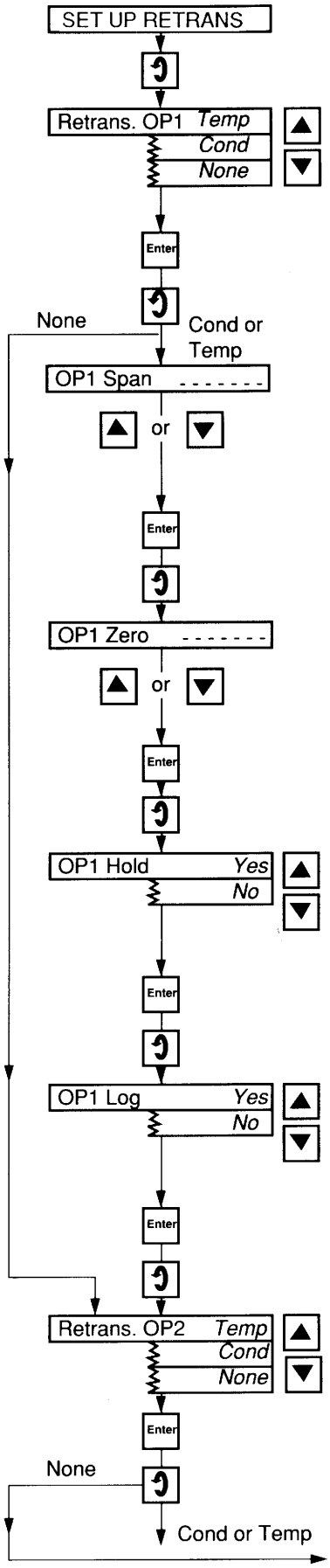

Page Header.

Advance to next parameter.

Retransmission Type, Output 1 Assignment
Select 'Cond' (conductivity), 'Temp' (temperature) or 'None' (switched off).

Store.

If 'None' advance to 'Retrans. OP2'.
If 'Cond' or 'Temp', advance to 'OP1 Span'.

Output 1 Span (Full Scale)
Retransmission, output 1 can operate over any portion of the input range to which it is assigned, provided that its span is ≥10% of the input range. See examples opposite. Select the required value, in conductivity or temperature units at which retransmission output 1 full scale is required.

Store.

Advance to next parameter.

Output 1 Zero
Select the required value, in conductivity or temperature units, for retransmission, output 1 zero.

Store.

Advance to next parameter.

Hold Output 1
The retransmission output can be held, if required, e.g. during cell cleaning or when calibrating. The 'hold' function is initiated and released by alternate operations of the 'Hold' switch. Select 'Yes' or 'No'.

Store.

Advance to next parameter.

Output 1 Logarithmic/Linear Selection
Select 'Yes' for logarithmic output, 'No' for linear.

Store.

Advance to next parameter.

Retransmission Type, Output 2 Assignment
Select 'Cond', 'Temp' or 'None'.

Store

If 'None' advance to 'Test Retrans. Zeros'.
If 'Cond' or 'Temp', advance to 'OP2 Span'.

Continued opposite.

(continued from opposite page.)

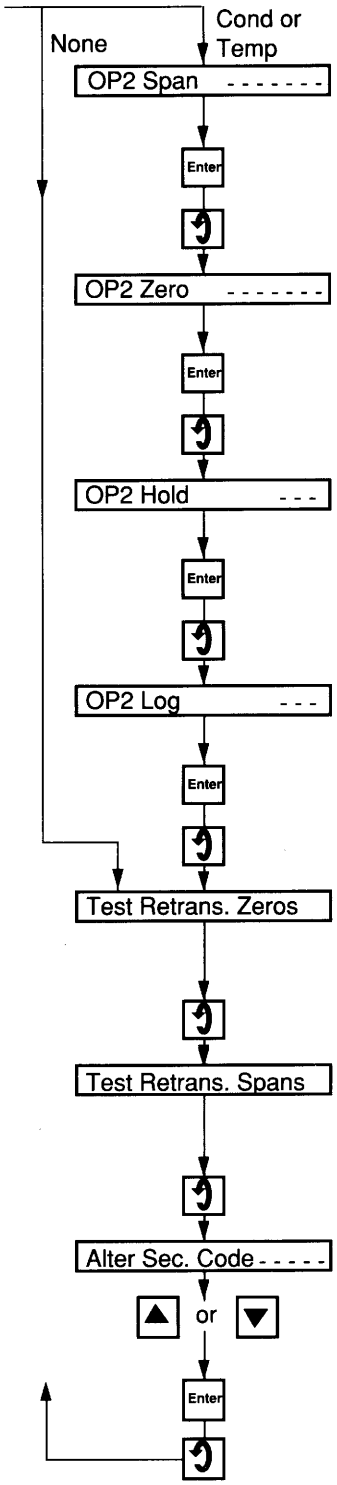

Output 2 Span (Full Scale)
As for Output 1.

Store.

Advance to next parameter.

Output 2 Zero
As for Output 1.

Store.

Advance to next parameter.

Hold Output 2
As for Output 1.

Store.

Advance to next parameter.

Output 2 Logarithmic/Linear Selection
As for Output 1.

Store.

Advance to next parameter.

Test Retransmission Zeros
The instrument automatically transmits a retransmission zero test signal, e.g. for a 4 to 20mA output range, 4mA is transmitted.

Advance to next parameter.

Test Retransmission Spans
The instrument automatically transmits a retransmission span test signal, e.g. for a 4 to 20mA output range, 20mA is transmitted.

Advance to next parameter.

Alter Security Code
Select the new security code value within the range 00000 to 19999.

Store.

Return to top of 'SET UP RETRANS' page.

N.B. Always make a note of the security code, particularly if it is altered. If the code is forgotten or misplaced, contact the Service Organisation.

Examples (see OP1 Span opposite)
1. For a 0 to 100µS/cm conductivity input range, the retransmission output must have a minimum span of 10µS/cm.
2. For a -10 to +110°C temperature range, the retransmission output must have a minimum span of 12°C.

8.4.6 Alarm Assignment and Action

Alarm l.e.d. indication and relay output (if fitted) can be assigned to either the conductivity or temperature input, or switched off.

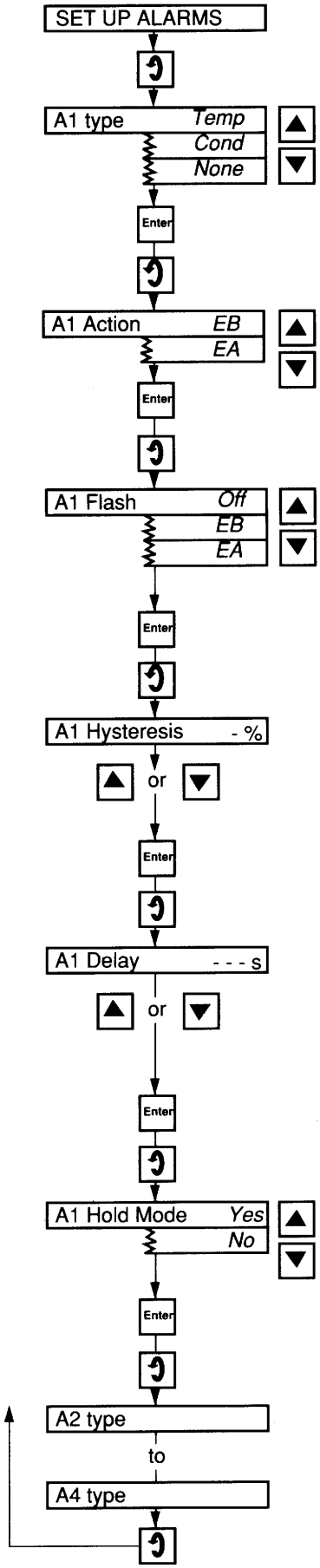

Page Header.

Advance to next parameter.

Alarm A1 Input Assignment
Select 'Cond' (conductivity), 'Temp' (temperature) or 'None' (switched off).

Store.

Advance to next parameter.

Alarm A1 Relay Action
Select from 'energised below set point' (EB) or 'energised above set point' (EA).

Store.

Advance to next parameter.

Alarm A1 Flash
The Alarm A1 l.e.d. on the front panel can be set to flash either above or below the set point independent of relay action, or switched off. Select from 'off', EB (indication below set point) or EA (indication above set point).

Store.

Advance to next parameter.

Alarm A1 Hysteresis
A differential set point can be set between 0 and 5% of the display span value. The programmed differential operates about the set point, e.g. a 5% differential is ±2.5%. Select the differential percentage from 0 to 5% in 1% steps.

Store.

Advance to next parameter.

Alarm A1 Delay
In the event of an alarm condition, relay actuation and l.e.d. indication can be delayed. If the alarm condition clears within the programmed delay time, the alarm function is not activated and the delay time is reset. Select the required delay time from 1 to 120 seconds in one-second steps.

Store.

Advance to next parameter.

Alarm A1 Hold Mode
The relay state and l.e.d. indication can be held, if required, during cell cleaning or calibration. For the 'Hold' facility to be activated, select 'Yes'. Otherwise, select 'No'.

Store.

Advance to next parameter.

Alarms A2 to A4
Repeat all the alarm programming procedures already detailed for Alarm A1.

Return to top of 'SET UP ALARMS' page.

8.4.7 Set Point Adjustment

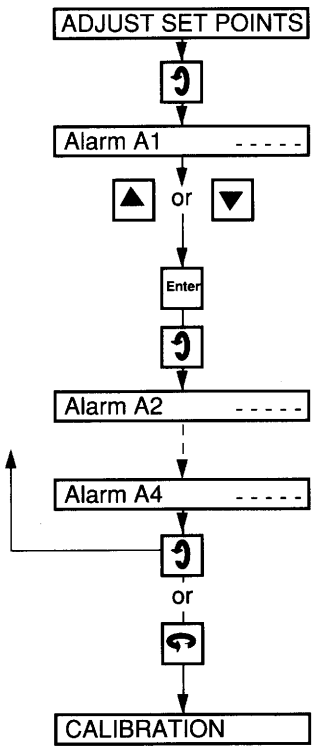

Page Header.

Advance to next parameter.

Alarm A1 Set Point
Select the required set point value within the input range to which Alarm A1 is assigned (conductivity or temperature). See Section 8.4.6 on page 26.

Store.

Advance to next parameter.

Alarm A2, A3 and A4 Set Points
Repeat the 'Alarm A1' procedures for Alarms A2 to A4.

Return to top of 'ADJUST SET POINTS' page.

Advance to 'CALIBRATION' page.

See Section 9 on page 39.

Note. If the conductivity input range is changed, the alarm values assigned to the conductivity input are automatically corrected to the same ratio within the new range.

Example – A conductivity range of 0 to 500µS/cm may have set points at 100 and 300µS/cm. If the range is then changed to 0 to 1,000µS/cm the set points are automatically reset to 200 and 600µS/cm, respectively.

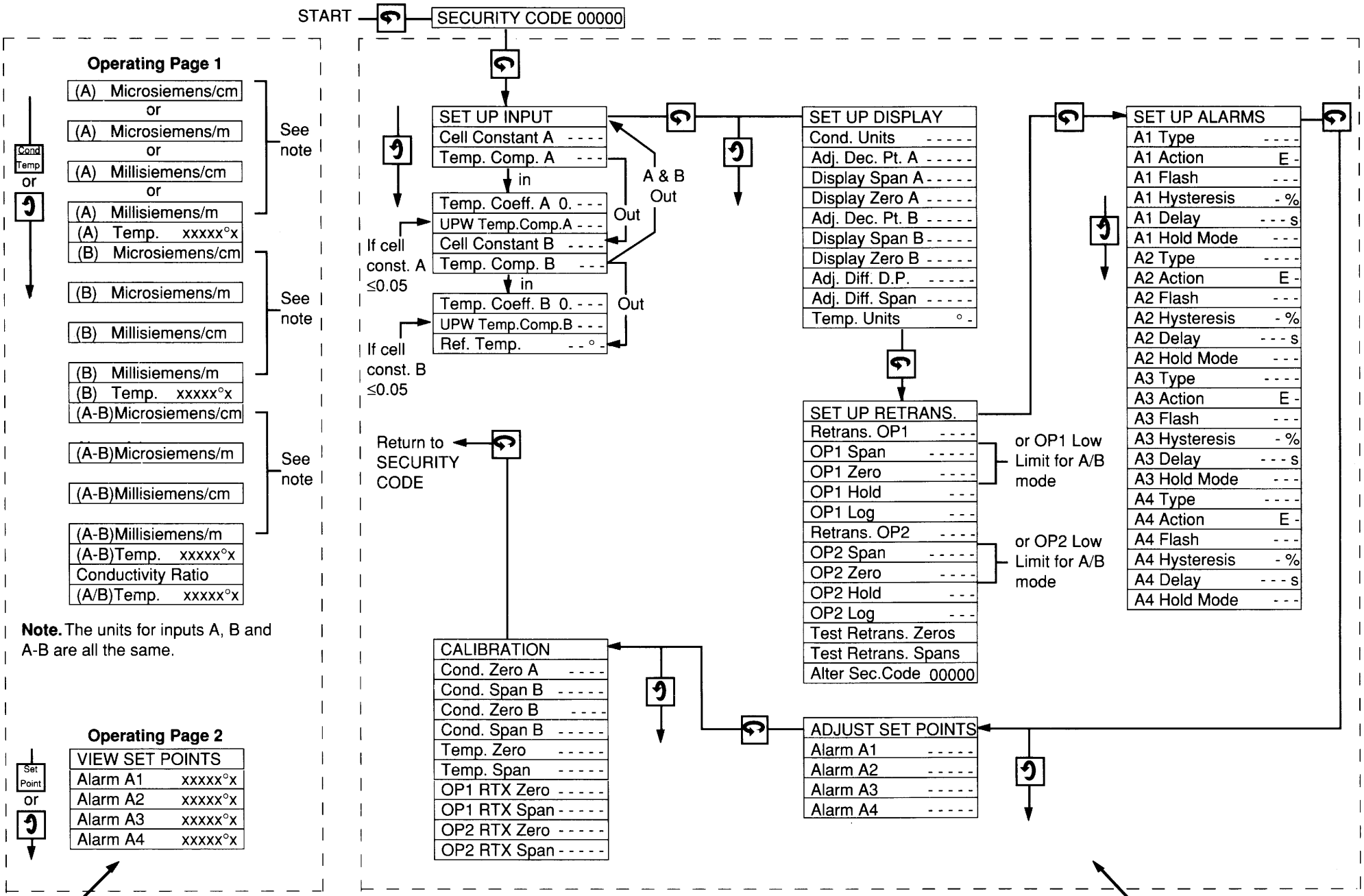

Fig. 8.2 Programme Chart, Differential Conductivity Input Versions (4511 & 4521)

8.5 Differential Input Version (Models 4511 and 4521) – Fig 8.2

8.5.1 Operating Pages

The values displayed in the operating pages are for viewing only and cannot be altered by the operator.

a) **Operating Page 1**

Parameters within this page can be accessed using either the 'Function' switch or the 'Parameter Advance' switch. The 'Function' switch is shown for example only.

(A) Microsiemens/cm
or
(A) Microsiemens/m
or
(A) Millisiemens/cm
or
(A) Millisiemens/m
or

Conductivity Units, Channel A
The conductivity units (any of four variants) are displayed for Input A. The units are programmable within the limits outlined in Table 6, overleaf – see 'SET UP DISPLAY' page, Section 8.5.4.

↓ Cond Temp

Display sample temperature (when making temperature-compensated measurements only).

(A) Temp. xxxxx°x
or

Sample Temperature, Input A

↓ Cond Temp

Display conductivity units for Input B.

(B) Microsiemens/cm
or
(B) Microsiemens/m
or
(B) Millisiemens/cm
or
(B) Millisiemens/m
or

Conductivity Units, Channel B
As for Channel A.

↓ Cond Temp

Display sample temperature.

(B) Temp. xxxxx°x
or

Sample Temperature, Input B

↓ Cond Temp

Display differential conductivity units.

(A-B) Microsiemens/cm
or
(A-B) Microsiemens/m
or
(A-B) Millisiemens/cm
or
(A-B) Millisiemens/m
or

Conductivity Units, Differential Input
As for Channel A.

↓ Cond Temp

Display sample temperature.

(A-B) Temp. xxxxx°x
or

Sample Temperature, Differential Input

↓ Cond Temp

Advance to next parameter.

Conductivity Ratio
or

Conductivity Ratio
Ratio of conductivity input A to conductivity input B.

↓ Cond Temp

Display sample temperature.

(A/B) Temp. xxxxx°x

Sample Temperature for Conductivity Ratio

↓ Cond Temp

Return to display of Conductivity Units, Channel A

b) **Operating Page 2**

To gain access to this page at any time, operate the 'Set Point' switch.

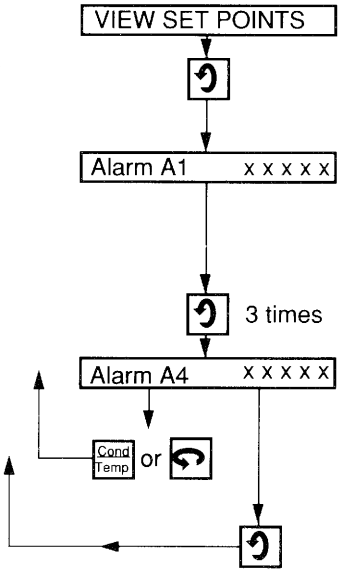

Page Header.

Subsequent parameters within the page can be accessed using either the 'Set Point' or the 'Parameter Advance' switch. The 'Parameter Advance' switch is shown for example only.

Alarm A1 Set Point

The set point value for alarm A1 is displayed. The set point functions, EA or EB, and values are entered in the 'SET UP ALARMS' and 'ADJUST SET POINT' pages respectively – see Sections 8.5.6 and 8.5.7.

Sequence through the displays of set points A2 to A4.

To return to Operating Page 1, operate either the 'Function' switch or the 'Page Advance' switch.

Return to top of 'VIEW SET POINTS' page.

8.5.2 Security Code

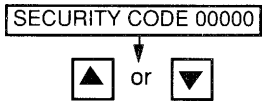

Select the previously known security code (00000 to 19999). If an incorrect value is entered, access to subsequent programming pages is barred. The security code can be altered in the 'SET UP RETRANS' pages – see Section 8.5.5.

Conductivity Cell Constant (K)	Minimum Conductivity Range	Minimum Span	Maximum Conductivity Range
0.01	0 to 0.1µS/cm 0 to 10µS/m 0 to 0.01mS/m	0.1µS/cm 10µS/m 0.01mS/m	0 to 100µS/cm 0 to 10,000µS/m 0 to 10mS/m
0.05	0 to 0.5µS/cm 0 to 50µS/m 0 to 0.05mS/m	0.5µS/cm 50µS/m 0.05mS/m	0 to 500µS/cm 0 to 10,000µS/m 0 to 50mS/m
0.1	0 to 1µS/cm 0 to 100µS/m 0 to 0.1mS/m	1µS/cm 100µS/m 0.1mS/m	0 to 1,000µS/cm 0 to 10,000µS/m 0 to 100mS/m
1.0	0 to 10µS/cm 0 to 1,000µS/m 0 to 0.01mS/cm 0 to 1mS/m	10µS/cm 1,000µS/m 0.01mS/cm 1mS/m	0 to 10,000µS/cm 0 to 10,000µS/m 0 to 10mS/cm 0 to 1,000mS/m

For cells with a constant (K) other than those specified, the conductivity range limits can be calculated from the following:

Minimum conductivity range – K x 10 (µS/cm)
Minimum span – K x 10 (µS/cm)
Maximum conductity range – K x 10,000 (µS/cm)

Table 6 Conductivity Range Limits for Different Cell Constants (K)

8.5.3 Setting Up the Input

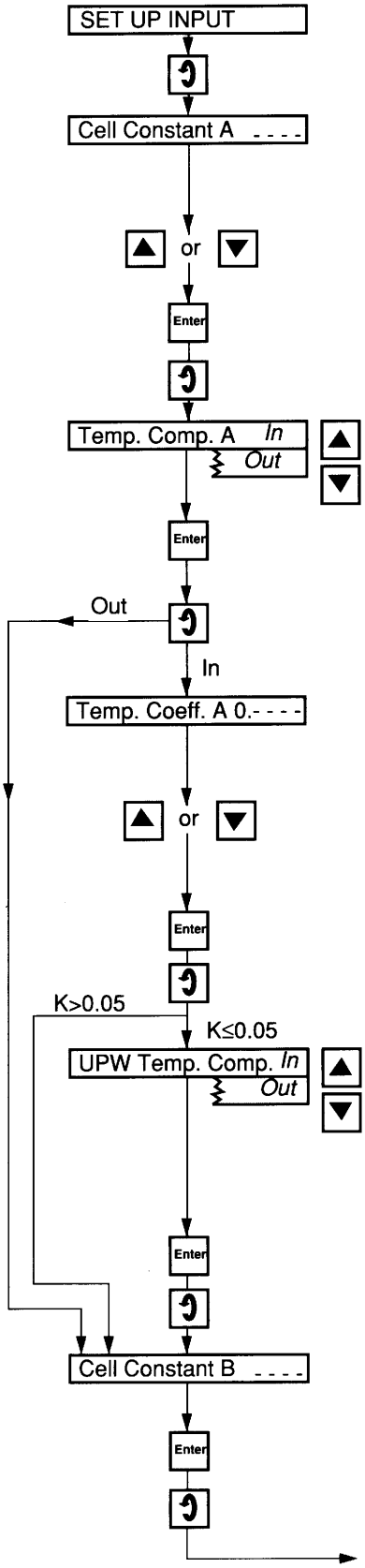

Page Header.

Advance to next parameter.

Conductivity Cell Constant (K), Channel A
The cell constant determines the limits for the conductivity range and units – see Table 6, opposite

Set the cell constant in accordance with that of the measuring cell used – see Section 2 on page 2.

Store.

Advance to next parameter.

Temperature Compensation, Channel A
Temperature compensation for fluctuations in the sample temperature can be switched either in or out, as required.

Store.

Advance to 'Cell Constant B' if 'Out' selected.
Advance to next parameter if 'In' selected.

Temperature Coefficient, Channel A
If it is unknown, the temperature coefficient of the solution can be calculated – see Section 12.2 on page 46.

Adjust the displayed value to the temperature coefficient of the solution (0.000 to 0.050). If the value has not yet been calculated, provisionally set it to 2%/°C (0.020).
Note. Always displayed per °C.

Store.

Advance to next parameter.

Ultra-pure Water (U.P.W.) Temperature Compensation, Channel A
Additional temperature compensation may be required if the sample conductivity approaches that of ultra-pure water, i.e. low conductivity (see Section 12.2 on page 46). This feature can only be utilised when using one of the Kent range of ultra-pure water conductivity cells with a cell constant (K) of ≤0.05. Select u.p.w. temperature compensation 'In' or 'Out'.

Store.

Advance to next parameter.

Conductivity Cell Constant (K), Channel B
As for Channel A.

Store.

Advance to next parameter.

Continued overleaf.

(continued from previous page.)

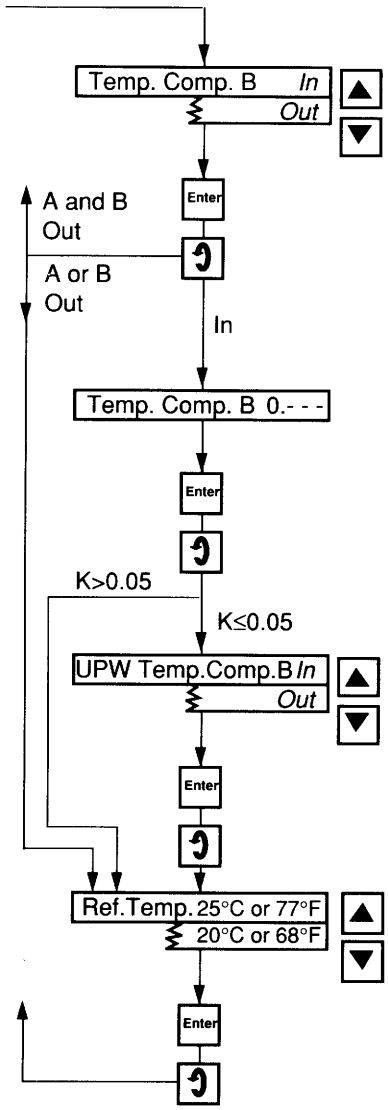

Temperature Compensation, Channel B
As for Channel A.

Store.

Return to top of 'SET UP INPUT' page if 'Out' selected for both Channels A and B.
Advance to 'Ref. Temp' if 'Out' selected for Channel B only.
Advance to next parameter if 'In' selected.

Temperature Coefficient, Channel B
As for Channel A.

Store.

Advance to next parameter.

Ultra-pure Water (U.P.W.) Temperature Compensation, Channel B
As for Channel A.

Store.

Advance to next parameter.

Reference Temperature
Select the reference temperature required.

Store.

Return to top of 'SET UP INPUT' page.

8.5.4 Setting Up the Display

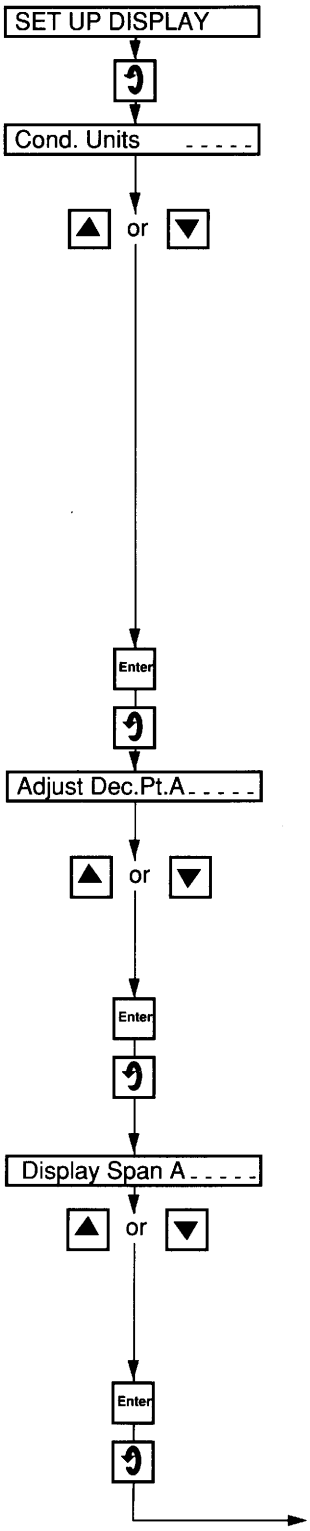

Page Header.

Advance to next parameter.

Conductivity Units
The conductivity units can be programmed to suit the range required.
Select from: Millisiemens/m (mS/m)
Millisiemens/cm (mS/cm)
Microsiemens/m (µS/m)
Microsiemens/cm (µS/cm)

The choice of units must ensure that the programmed range does not exceed the display limit, i.e. 10,000.

Note. Conductivity unit selections are limited by the conductivity range and the cell constant – see Table 6, page 30. Invalid units are denoted by a '?' in the selection.

Example – for a cell constant of 1.0 and a required range of 0 to 50,000µS/cm:

0 to 50,000µS/cm would exceed display limits
0 to 50.00mS/cm or 0 to 5,000µS/m are within the display limits.

Store.

Advance to next parameter.

Decimal Point Position, Channel A

Set the decimal point position to obtain the required resolution for the chosen conductivity range. Ignore the displayed value.

Example – for a range of 0 to 500µS/cm set the decimal point to 'xxx.x' or 'xxx.'.

Store.

Advance to next parameter.

Display Span (Full Scale), Channel A

Set the full scale conductivity value required, ensuring that it is within the limits dictated by the previously programmed cell constant – see 'SET UP INPUT' page on page 31.

Example – for a range of 0 to 500µS/cm, set to 500.0 or 500.

Store.

Advance to next parameter.

Continued overleaf.

(continued from previous page.)

Display Zero A - - - - -

▲ or ▼

Display Zero, Channel A

Set the zero conductivity value required. For the above **Example**, set to 0.

Suppressed zero ranges are permitted up to 50% span.

Example – for a range of 0 to 500µS/cm a zero value up to 250µS/cm is permissible.

Note. When using a suppressed zero range the displayed conductivity is derived from the measured conductivity minus the programmed display zero, i.e. the conductivity relative to the suppressed zero, not the absolute conductivity. This feature is particularly useful when monitoring very low conductivity levels, since the ultra-pure water content (0.055µS/cm) is accounted for and the displayed value is that of the impurities present, e.g. 0.057µS/cm is displayed as 0.002µS/cm. For display of the actual measured conductivity (absolute), use a zero-based range.

Enter

Store.

Advance to next parameter.

Adjust Dec.Pt.B- - - - -

Decimal Point Position, Channel B
As for Channel A.

Enter

Store.

Advance to next parameter.

Display Span B - - - - -

Display Span (Full Scale), Channel B
As for Channel A.

Enter

Store.

Advance to next parameter.

Display Zero B - - - - -

Display Zero, Channel B
As for Channel A.

Enter

Store.

Advance to next parameter.

Adj. Diff. D.P. - - - - -

Adjust Differential Decimal Point Position
Set the required decimal point position for the expected difference span value between channel A and channel B – see next parameter.

Enter

Store.

Advance to next parameter.

Adj. Diff. Span - - - - -

Adjust Differential Span Value
Set the difference span to a value which encompasses the expected difference between channel A and channel B.

Example – If channels A and B are both ranged 0 to 1000µS/cm and the difference between the channel readings is not expected to exceed 10µS/cm, set '10.00'.

Enter

Store.

Advance to next parameter.

Temp. Units °F °C

▲ ▼

Temperature Units
When making temperature-compensated measurements, the sample temperature (and reference temperature) can be displayed as either Fahrenheit or Celsius. Select °F or °C.

Enter

Store.

Return to top of 'SET UP DISPLAY ' page.

8.5.5 Retransmission Assignment

The retransmission outputs can be assigned to conductivity A, conductivity B, conductivity difference, conductivity ratio or the temperature input, but are only operative if the relevant modules are fitted. Refer to Table 1 on page 3 to determine which output(s) require(s) programming.

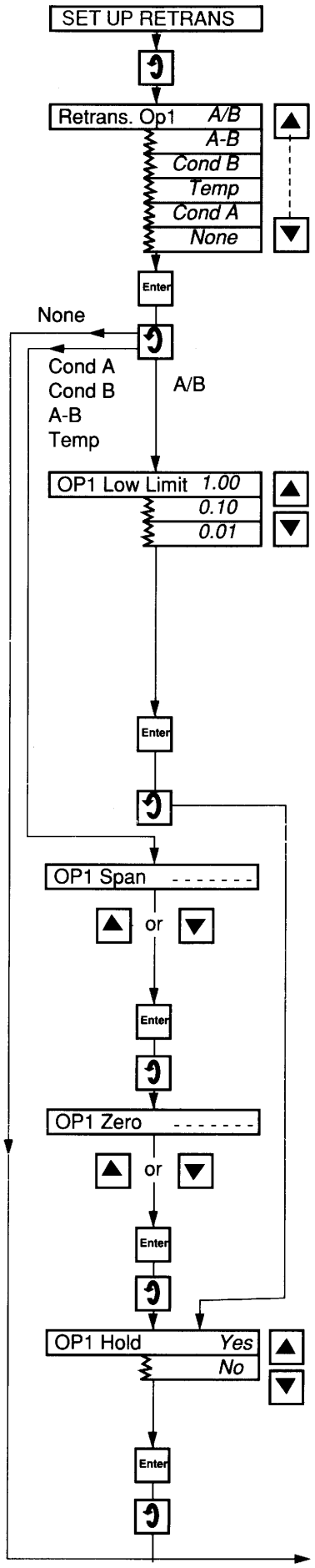

Page Header.

Advance to next parameter.

Retransmission Type, Output 1 Assignment
Select from 'Cond A' (conductivity, Channel A), 'Cond B', A-B (conductivity differential), A/B (conductivity ratio), 'Temp' (temperature) or 'None' (switched off).

Store.

If 'None', advance to 'Retrans. OP2'.
If 'A/B', advance to 'OP1 Low Limit'.
If 'Cond A', 'Cond B', 'A-B' or 'Temp', advance to 'OP1 Span'.

Retransmission Output 1, Low Limit
This parameter is only displayed if conductivity ratio is selected at the previous step.
Select from 1.00, 0.10 or 0.01. Ths associated high value is automatically set at two decades above the selected low limit; e.g. for a 4 to 20mA retransmission signal,
if 1.00 is assigned to 4mA, 100.00 is assigned to 20mA
if 0.10 is assigned to 4mA, 10.00 is assigned to 20mA
if 0.01 is assigned to 4mA, 1.00 is assigned to 20mA

Store.

Advance to 'OP1 Hold'.

Output 1 Span (Full Scale)
Retransmission, output 1 can operate over any portion of the input range to which it is assigned, provided that its span is ≥10% of the input range. See examples on page 37. Select the required value, in conductivity or temperature units at which retransmission output 1 full scale is required.

Store.

Advance to next parameter.

Output 1 Zero
Select the required value, in conductivity or temperature units, for retransmission, output 1 zero.

Store.

Advance to next parameter.

Hold Output 1
The retransmission output can be held, if required, e.g. during cell cleaning or when calibrating. The 'hold' function is initiated and released by alternate operations of the 'Hold' switch. Select 'Yes' or 'No'.

Store.

Advance to next parameter.

Continued overleaf.

(continued from previous page.)

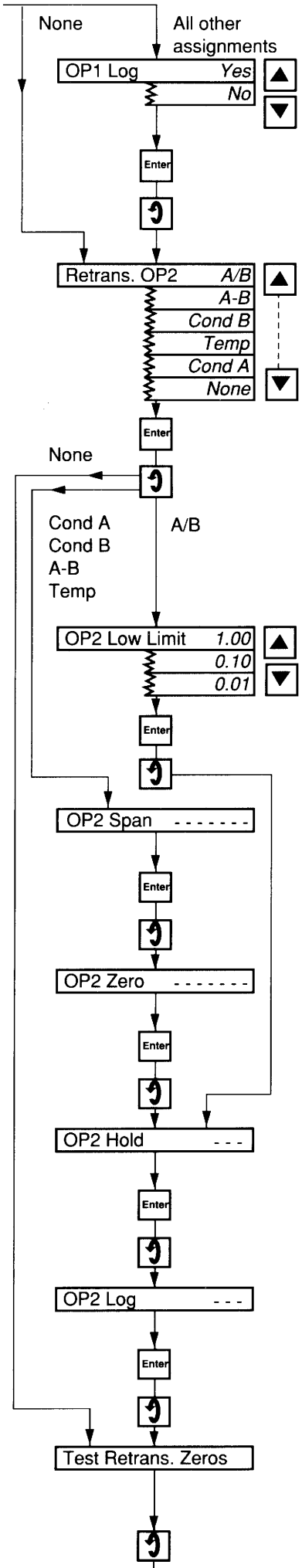

Output 1 Logarithmic/Linear Selection
Select 'Yes' for logarithmic output, 'No' for linear.

Store.

Advance to next parameter.

Retransmission Type, Output 2 Assignment
Proceed as for 'Retransmission Type, Output 1 Assignment'.

Store

If 'None' advance to 'Test Retrans. Zeros'.
If 'A/B', advance to 'OP2 Low Limit'.
If 'Cond A', 'Cond B', 'A-B' or 'Temp', advance to 'OP2 Span'.

Retransmission Output 2, Low Limit
Proceed as for 'Output 1, Low Limit'.

Store.

Advance to 'OP2 Hold'.

Output 2 Span (Full Scale)
As for Output 1.

Store.

Advance to next parameter.

Output 2 Zero
As for Output 1.

Store.

Advance to next parameter.

Hold Output 2
As for Output 1.

Store.

Advance to next parameter.

Output 2 Logarithmic/Linear Selection
As for Output 1.

Store.

Advance to next parameter.

Test Retransmission Zeros
The instrument automatically transmits a retransmission zero test signal, e.g. for a 4 to 20mA output range, 4mA is transmitted.

Advance to next parameter.

Continued opposite.

(continued from previous page)

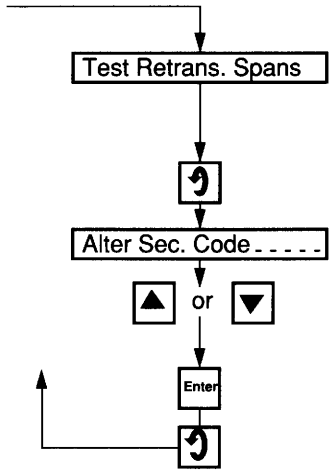

Test Retransmission Spans
The instrument automatically transmits a retransmission span test signal, e.g. for a 4 to 20mA output range, 20mA is transmitted.

Advance to next parameter.

Alter Security Code
Select the new security code value within the range 00000 to 19999.

Store.

Return to top of 'SET UP RETRANS' page.

N.B. Always make a note of the security code, particularly if it is altered. If the code is forgotten or misplaced, contact the Service Organisation.

Examples (see OP1 Span on page 35)
1. For a 0 to 100µS/cm conductivity input range, the retransmission output must have a minimum span of 10µS/cm.
2. For a -10 to +110°C temperature range, the retransmission output must have a minimum span of 12°C.

8.5.6 Alarm Assignment and Action

Alarm l.e.d. indication and relay output (if fitted) can be assigned to either the conductivity or temperature input, or switched off.

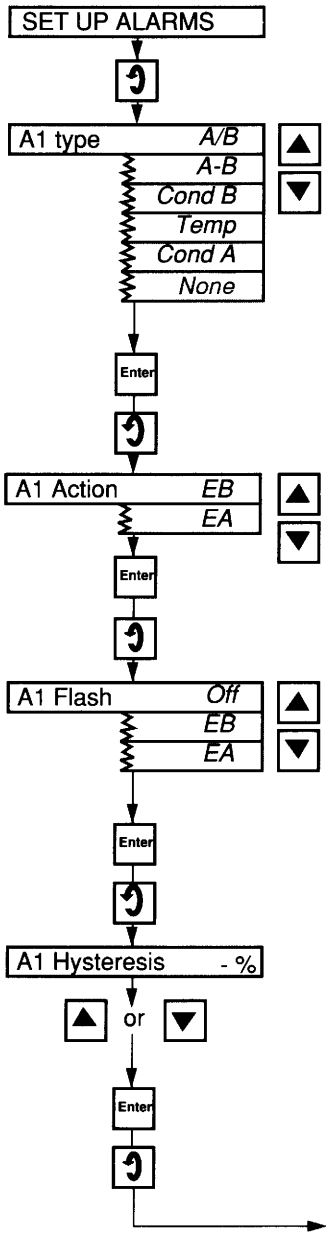

Page Header.

Advance to next parameter.

Alarm A1 Input Assignment
Select from 'Cond A' (conductivity, Channel A), 'Cond B', A-B (conductivity differential), A/B (conductivity ratio), 'Temp' (temperature) or 'None' (switched off).

Store.

Advance to next parameter.

Alarm A1 Relay Action
Select from 'energised below set point' (EB) or 'energised above set point' (EA).

Store.

Advance to next parameter.

Alarm A1 Flash
The Alarm A1 l.e.d. on the front panel can be set to flash either above or below the set point independent of relay action, or switched off. Select from 'off', EB (indication below set point) or EA (indication above set point).

Store.

Advance to next parameter.

Alarm A1 Hysteresis
A differential set point can be set between 0 and 5% of the display span value. The programmed differential operates about the set point, e.g. a 5% differential is ±2.5%. Select the differential percentage from 0 to 5% in 1% steps.

Store.

Advance to next parameter.

Continued overleaf.

(continued from previous page)

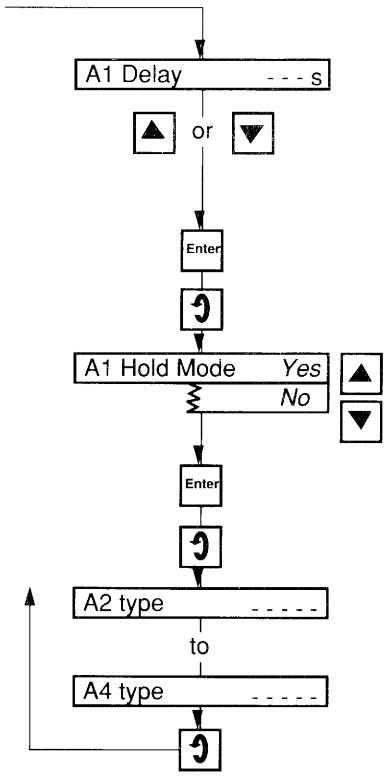

Alarm A1 Delay
In the event of an alarm condition, relay actuation and l.e.d. indication can be delayed. If the alarm condition clears within the programmed delay time, the alarm function is not activated and the delay time is reset. Select the required delay time from 1 to 120 seconds in one-second steps.

Store.

Advance to next parameter.

Alarm A1 Hold Mode
The relay state and l.e.d. indication can be held, if required, during cell cleaning or calibration. For the 'Hold' facility to be activated, select 'Yes'. Otherwise, select 'No'.

Store.

Advance to next parameter.

Alarms A2 to A4
Repeat all the alarm programming procedures already detailed for Alarm A1.

Return to top of 'SET UP ALARMS' page.

8.5.7 Set Point Adjustment

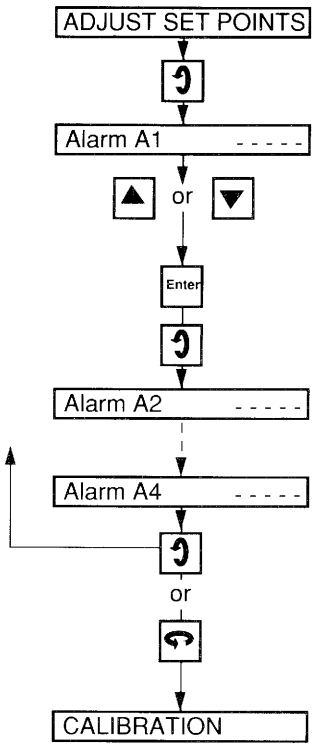

Page Header.

Advance to next parameter.

Alarm A1 Set Point
Select the required set point value within the input range to which Alarm A1 is assigned (conductivity or temperature) –see Section 8.5.6 on page 37.

Store.

Advance to next parameter.

Alarm A2, A3 and A4 Set Points
Repeat the 'Alarm A1' procedures for Alarms A2 to A4.

Return to top of 'ADJUST SET POINTS' page.

Advance to 'CALIBRATION' page.

See Section 9 following.

Note. If the conductivity input range is changed, the alarm values assigned to the conductivity input are automatically corrected to the same ratio within the new range.

Example – A conductivity range of 0 to 500µS/cm may have set points at 100 and 300µS/cm. If the range is then changed to 0 to 1,000µS/cm the set points are automatically reset to 200 and 600µS/cm, respectively.

9 CALIBRATION

The instrument should be calibrated at periodic intervals or after a change to instrument operation.

9.1 Equipment Required

a) Decade resistance box (conductivity input simulator), suitable for simulation over the programmed input range and determined from:

$$R = \frac{K \times 10^6}{G}$$

Where R is the decade box resistance
K is the cell constant
G is the conductivity

b) Decade resistance box (temperature input simulator):

0 to 1kΩ (in increments of 0.01Ω)

c) Digital milliammeter (current output measurement):

0 to 20mA. Refer to Section 6 on page 15 to identify the current output range.

Note. Resistance boxes have an inherent residual resistance which may range from a few milliohms up to 1ohm. This value must be taken into account when simulating input levels, as should the overall tolerance of the resistors within the boxes.

9.2 Preparation

a) Switch off the supply and disconnect the conductivity cell, temperature compensator and current output from the instrument's terminal blocks – see Section 5 on page 13.

b) Connect the decade boxes and milliammeter to the appropriate terminals.

Note. Connect the earth on the conductivity decade box to the 'Braid' terminal.

c) Switch on the supply and allow two minutes for the circuits to stabilise.

d) Set on-scale values on both the conductivity and temperature input simulators:

Conductivity input – use $R = \frac{K \times 10^6}{G}$

Temperature input – derive from standard resistance thermometer tables.

e) Select the 'SET UP INPUT' page and make a note of the 'Cell Constant'(s) and set the 'Temp. Comp.'(s) to 'Out'.

f) Select the 'SET UP DISPLAY' page and make a note of the 'Display Span'(s) and 'Display Zero'(s).

g) Select the 'SET UP RETRANS' page and make a note of:

The 'Retrans. OP1' type, 'OP1 Span' and 'OP1 Zero' values

and/or

The 'Retrans. OP2', type 'OP2 Span' and 'OP2 Zero' values

h) Display the 'CALIBRATION' page and proceed as in Section 9.3, following.

9.3 Calibration Page

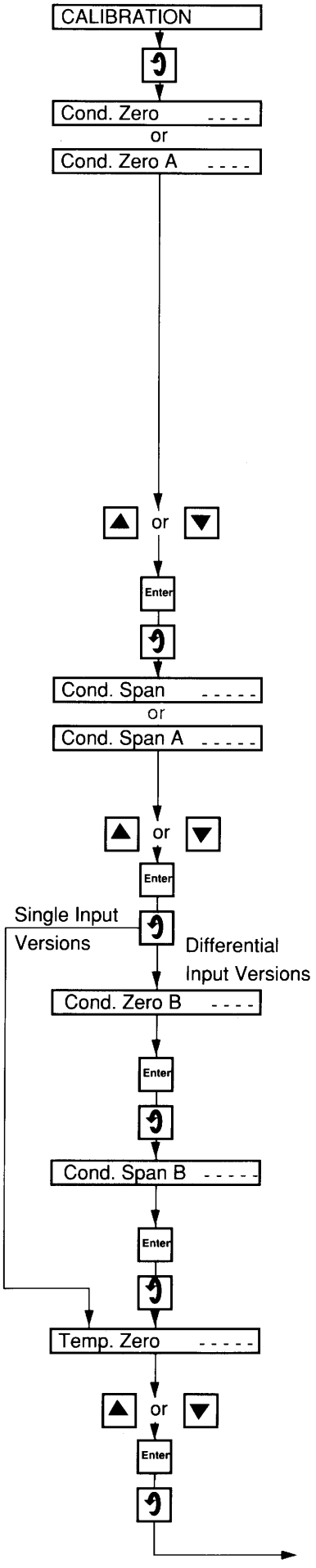

Page Header.

Advance to next parameter.

Conductivity Zero (single conductivity input versions)

Conductivity Zero, Channel A (differential input versions)
Simulate a conductivity input for 'Display Zero' noted at f), previous page.

Note. For zero-based ranges open circuit the input.

Example 1 – for a conductivity range of 250 to 1,000µS/cm with a cell constant of 0.1:

$$R = \frac{K \times 10^6}{G}$$

$$R = \frac{0.1 \times 10^6}{250}$$

$$R = 400\Omega$$

Set the displayed value to that of 'Display Zero'.

Store.

Advance to next parameter.

Conductivity Span (Full Scale) (single conductivity input versions)

Conductivity Span (Full Scale), Channel A (differential input versions)
Simulate a conductivity input for 'Display Span' noted at f), previous page. For **Example 1**, set simulator to 100Ω.

Set the displayed value to that of 'Display Span'.

Store.

Advance to next parameter.

Conductivity Zero, Channel B
As for Channel A.

Store.

Advance to next parameter.

Conductivity Span (Full Scale), Channel B
As for Channel A.

Store.

Advance to next parameter.

Temperature Zero
Simulate a temperature input equivalent to -10°C (i.e. 96.09Ω).

Set displayed value to '-10'.

Store.

Advance to next parameter.

Continued opposite.

continued from opposite page

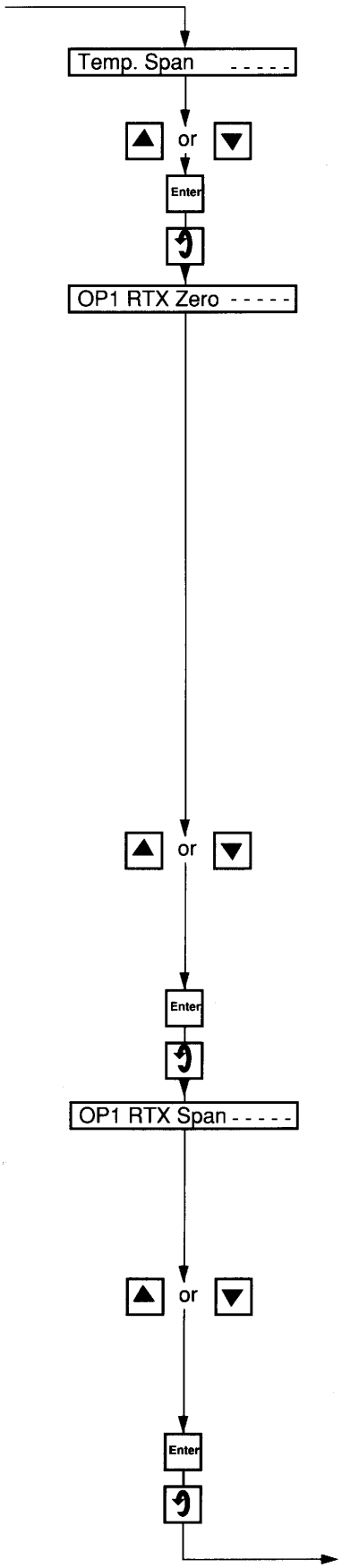

Temperature Span (Full Scale)
Simulate a temperature input equivalent to 110°C (i.e. 142.29Ω).

Set displayed value to '110'.

Store.

Advance to next parameter.

Retransmission Output 1 Zero
Determine to which input the current output has been assigned ('Cond.' or 'Temp.') – see 'Retrans. OP1 in g), on page 39.

Note. If 'Retrans. OP1' has been set to 'None', the display value is '0' and the current output is non-operative.

Set the appropriate simulator(s) to the input value(s) at which retransmission zero is required.

Example 2 – for a conductivity input range of 250 to 1,000µS/cm, with a cell constant of 0.1 and current retransmission required over 500 to 750µS/cm:

$$R = \frac{0.1 \times 10^6}{500}$$

$$R = 200\Omega$$

Example 3 – the temperature input range is preset at -10 to 110°C. For current retransmission over 0 to 100°C, R = 100Ω (obtained from standard tables).

Set the millammeter reading of that of the minimum retransmission level, i.e. 0mA (zero-based ranges) or 4mA (4 to 20mA range).

Note. The instrument display shows the input value which is unaffected when making current output adjustments.

Store.

Advance to next parameter.

Retransmission Output 1 Span (Full Scale)
Set the appropriate simulator(s) to the input value(s) at which retransmission span (full scale) is required.

For **Example 2** set to 133.33Ω.
For **Example 3** set to 138.5Ω.

Set the milliammeter reading to that of the maximum retransmission level, i.e. 1mA, 10mA or 20mA.

Note. The instrument display shows the input value which is unaffected when making current output adjustments.

Store.

Advance to next parameter.

Continued overleaf.

continued from previous page

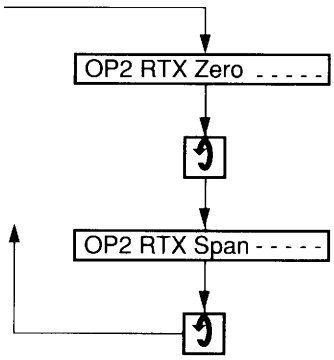

Retransmission Output 2 Zero
As for **Retransmission Output 1 Zero,** previous page.

Advance to next parameter

Retransmission Output 2 Span (Full Scale)
As for **Retransmission Output 1 Span (Full Scale)**, previous page.

Return to top of 'CALIBRATION' page.

On completion of calibration, switch off the supply and disconnect the decade boxes and milliammeter. Remake the original connections and, if necessary, reset the 'Temp. Comp.'(s) to 'In' – see a) and e), respectively, on page 39.

10 SIMPLE FAULT FINDING

If the instrument does not appear to be working satisfactorily, carry out the checks detailed in the following table before contacting the Service Organisation.

Are all connections correctly made? – see Section 5 on page 13.

Is there power to the instrument?

Is the mains input selector correctly positioned for the supply used? – see Section 6 on page 15.

Carry out the calibration procedure (Section 9) to ascertain whether the instrument or the conductivity measuring cell and/or its connecting cable is at fault – refer to page 39.

Ensure that the input and output modules are correctly fitted – see Fig. 6.2a or 6.2b on page 16, as appropriate.

Switch off the supply and disconnect the temperature compensator's green/yellow and brown leads from the terminal block (refer to page 14). Use a high impedance digital multimeter to measure the resistance across the leads to check the compensator resistance and cable continuity. The measured resistance, with the temperature compensator at 25° C, should be 109.73Ω.

11 SPECIFICATION

Operating Data	
Number of Inputs	One temperature (all versions) One conductivity (models 4510 and 4520) Two conductivity (models 4511 and 4521)
Conductivity ranges:	Programmable from 0 to 0.01 µS/cm up to 10,000 µS/cm (utilising various cell constants – see Table 5, page 21 or Table 6, page 30)
Minimum span	Dependent on cell constant used – see Table 5, page 21 or Table 6, page 30
Conductivity units	Programmable as microsiemens/cm, microsiemens/m, millisiemens/cm, millisiemens/m (all versions) or megohms-cm (models 4510 and 4520 only)
Conductivity measurement accuracy	±0.2% f.s.d. ±1 digit
Linearity	±0.1% f.s.d.
Temperature measuring range	-10 to 110°C
Temperature compensation:	
Impurities	Automatic in the range -10 to 110°C using temperature compensation element mounted within the conductivity cell. — Can be switched out
Ultra-pure water	Automatic for the effects of u.p.w. if appropriate range and cell constant are programmed. — Can be switched out
Temperature compensation accuracy	<0.1% f.s.d.
Temperature coefficient	Programmable 0 to 5.0%/°C
Temperature sensor	Pt100 resistance thermometer
Reference temperature	Programmable as 20°C (68°F) or 25°C (F)
Displays and L.E.D. Indication	
Measured value display	5-digit, seven segment, blue filtered vacuum fluorescent
Programming and instrument functions display	20-character, 7 x 5 dot-matrix, blue filtered vacuum fluorescent
L.E.D. alarm indication	Programmable for indication above or below set point
Outputs and Set Points	
Number of relays	4 max.(2 standard, 2 optional) with programmable operation (energised above or below the set point)
Relay assignment	Conductivity or temperature (models 4510 and 4520) Conductivity-channel A, conductivity-channel B, conductivity difference, conductivity ratio or temperature (models 4511 and 4512)
Relay contacts:	
Type	Single pole changeover
Voltage	250V a.c. 250V d.c. (max.)
Current	3A a.c. 3A d.c. (max.)
Loading (non-inductive)	750VA 30W (max.)
Insulation, contacts to earth	2kV r.m.s.
Number of set points	4
Set point adjustment	Programmable over measured range (conductivity or temperature)
Set point differential	Programmable from 0 to 5%

continued overleaf

Outputs and Set Points (continued)	
Alarm delay	Programmable from 0 to 120s
Number of retransmission outputs	2 max. (1 standard, 1 optional) fully isolated current
Output current	0 to 1mA, 0 to 10mA, 0 to 20mA or 4 to 20mA selectable via plug-in links
Output function	Programmable, linear or logarithmic
Assignment	Conductivity or temperature (models 4510 and 4520) Conductivity-channel A, conductivity-channel B, conductivity difference, conductivity ratio or temperature (models 4511 and 4521)
Accuracy	±0.25% f.s.d., ±0.5% of reading
Resolution	0.1% at 10mA, 0.05% at 20mA
Max. load resistance:	
0 to 1mA	10kΩ
0 to 10mA	2kΩ
0 to 20mA	1kΩ
4 to 20mA	1kΩ
Zero offset	Programmable up to 90% f.s.d.
Hold mode	Operates on the retransmission output(s) and/or the relay output(s)/alarm indication l.e.d.(s) (independently programmable)
Power Supply	
Voltage requirement:	
A.C. powered instruments	110V/120V or 220V/240V, 50/60Hz, selectable via plug-in link
D.C. powered instruments	10 to 30V
Power requirement:	
A.C. powered instruments	<20VA
D.C. powered instruments*	<22W
Error due to power supply voltage variation	<0.1% f.s.d. for +6%-20% variation from nominal supply voltage
Insulation, mains to earth	2kV r.m.s.
Isolation voltage	Input/output/power supply 1.5kV r.m.s.
Environmental Data	
Operating temperature limits	-25 to +55°C
Operating humidity limits	Up to 95% RH, non-condensing
Interference suppression:	
Radiated (radio frequency)	<2% f.s.d. deviation over range 20 to 500MHz at a field strength of 10V/m
Mechanical Data	
Mounting	Wall (models 4510/11), pipe (models 4510/11 with pipe-mounting bracket) or panel (models 4520/21)
Overall dimensions:	
Models 4510 and 4511	254mm wide x 371mm high x 130mm deep
Models 4520 and 4521	144mm wide x 144mm high x 262mm (253mm behind panel face) Panel cut-out 138^{0}_{+1} mm -0 x 138^{0}_{+1} mm
Enclosure:	
Models 4510 and 4511	Moulded Noryl FN215 PPO housing
Models 4520 and 4521	Sheet steel case with hinged, glazed door
Weight	4.5kg approx. (models 4510 and 4511), 5.0kg approx. (models 4520 and 4521)

* At start-up, d.c.-powered instruments may require an initial surge current of up to 5A (1ms duration max.)

12 APPENDICES

12.1 Operation of Withdrawable Conductivity Cells

When inserting or removing withdrawable conductivity cells, it is important to ensure that the correct procedure is carried out.

WARNING. Ensure that all necessary precautions are taken to safeguard against high temperatures and pressures when carrying out the following:

12.1.1 Inserting a Withdrawable Conductivity Cell – Fig. A1

① Ensure that the outer electrode is screwed hand-tight on to the conductivity cell. Take care not to touch the inner surface of the electrode or the centre electrode.

② Push the conductivity cell firmly into the valve.

③ Locate the knurled cell retaining nut on its thread and turn it in a clockwise direction to the full extent of the thread. Firmly tighten the nut.

④ Open the valve slightly by turning the valve adjusting sleeve (two turns only) in a clockwise direction.

⑤ Rotate the retaining nut slightly, in an anti-clockwise direction, and ensure that it rotates the whole conductivity cell without unscrewing.

If the retaining nut unscrews, carry out steps ⑥ and ⑦; otherwise, go to step ⑧.

⑥ Close the valve by turning the valve adjusting sleeve fully anti-clockwise until it is tight. When the valve is fully closed the index mark is visible.

⑦ Retighten the cell retaining nut in a clockwise direction.

Repeat steps ④ and ⑤.

⑧ Continue to turn the valve adjusting sleeve in a clockwise direction until tight. The valve is now fully open and ready for use.

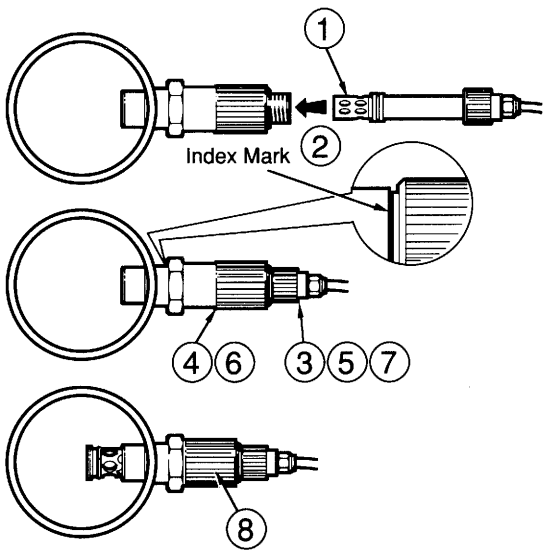

Fig. A1 Inserting a Withdrawable Conductivity Cell

12.1.2 Removing a Withdrawable Conductivity Cell – Fig. A2

① Close the valve by turning the valve adjusting sleeve fully anti-clockwise, until tight. When the valve is fully closed the index mark will be visible.

② Slowly unscrew the knurled cell retaining nut in an anti-clockwise direction, until the pipeline pressure is released.

WARNING. Do not completely unscrew the retaining nut until fluid has ceased to flow from the pressure release hole and beneath the adjusting sleeve.

If fluid continues to flow, carry out steps ③ and ④; otherwise go to step ⑤.

③ Retighten the retaining nut in a clockwise direction

④ Further tighten the valve adjusting sleeve in an anti-clockwise direction.

Repeat steps ② to ④ until fluid ceases to flow from the pressure release hole and beneath the valve adjusting sleeve.

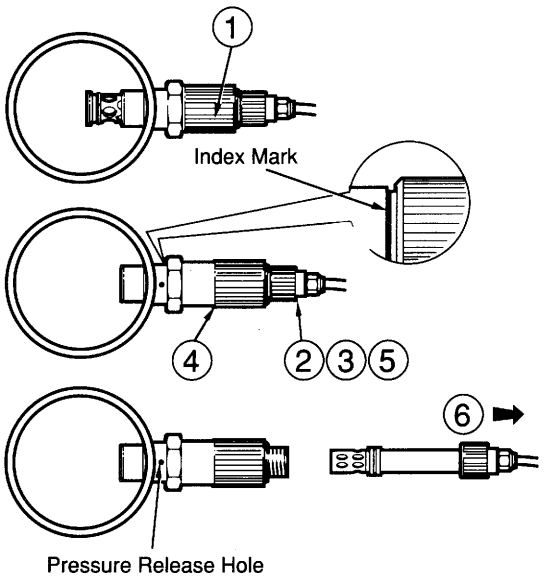

Fig. A2 Removing a Withdrawable Conductivity Cell

WARNING. If fluid flow continues, do not attempt to remove the conductivity cell by further unscrewing the cell retaining nut. Wait until the pipeline pressure can be shut off and the valve assembly removed for inspection.

⑤ Fully unscrew the retaining nut.

⑥ Remove the conductivity cell by pulling firmly on the nut.

CAUTION. Do not pull on the conductivity cell connecting cable when removing the cell from its valve.

12.2 Automatic Temperature Compensation

The conductivities of electrolytic solutions are influenced considerably by temperature variations. Thus, when significant temperature fluctuations occur, it is general practice to correct automatically the measured, prevailing conductivity to the value that would apply if the solution temperature were 25°C, the internationally accepted standard.

Most commonplace, weak aqueous solutions have temperature coefficients of conductance of the order of 2% per °C (i.e. the conductivities of the solutions increase progressively by 2% per °C rise in temperature); at higher concentrations the coefficient tends to become less.

At low conductivity levels approaching that of ultra-pure water, dissociation of the H_2O molecule takes place and it separates into the ions H^+ and OH^-. Since conduction occurs only in the presence of ions, there is a theoretical conductivity level for ultra-pure water which can be calculated mathematically. In practice, correlation between the calculated and actual measured conductivity of ultra-pure water is very good.

Fig. A3 shows the relationship between the theoretical conductivity for ultra-pure water and that of high purity water (ultra-pure water with a slight impurity), when plotted against temperature. The figure also illustrates how a small temperature variation considerably changes the conductivity. Subsequently, it is essential that this temperature effect is eliminated at conductivities approaching that of ultra-pure water, in order to ascertain whether a conductivity variation is due to a change in impurity level or in temperature.

For conductivity levels above 1µS/cm, the generally accepted expression relating conductivity and temperature is:

$$G_t = G_{25}[1 + \propto (t - 25)]$$

Where G_t is the conductivity at the temperature t°C

G_{25} is the conductivity at the standard temperature (25°C)

$\propto$ is the temperature coefficient per °C

At conductivities between 1µS/cm and 1,000µS/cm, $\propto$ lies generally between 0.015/°C and 0.025/°C. When making temperature compensated measurements, a conductivity instrument must carry out the following computation to obtain G_{25}:

$$G_{25} = \frac{G_t}{[1 + \propto (t - 25)]}$$

However, for ultra-pure water conductivity measurement, this form of temperature compensation alone is unacceptable, since considerable errors exist at temperatures other than 25°C – see Fig. A4.

At high purity water conductivity levels, the conductivity/temperature relationship is made up of two components: the first component, due to the impurities present, generally has a temperature coefficient of approximately 0.02/°C; and the second, which arises from the effect of the H^+ and OH^- ions, becomes predominant as the ultra-pure water level is approached.

Consequently, to achieve full automatic temperature compensation, the above two components must be compensated for separately, according to the following expression:

$$G_{25} = \frac{G_t - G_{upw}}{[1 + \propto (t - 25)]} + 0.055$$

Where G_t is the conductivity at temperature t°C

G_{upw} is the ultra-pure water conductivity at temperature t°C

$\propto$ is the impurity temperature coefficient

0.055 is the conductivity in µS/cm of ultra-pure water at 25°C

The expression is simplified as follows:

$$G_{25} = \frac{G_{imp}}{[1 + \propto (t - 25)]} + 0.055$$

Where G_{imp} is the impurity conductivity at temperature t°C

The above expression was solved in earlier analogue instrumentation by employing two temperature sensing elements located in the conductivity measuring cell. However, models 4510, 4511, 4520 and 4521 now utilise the computational ability of a microprocessor to achieve ultra-pure water temperature compensation using only a single platinum resistance thermometer and mathematically calculating the temperature compensation required to give the correct conductivity at the reference temperature.

12.2.1 Calculation of Temperature Coefficient

The temperature coefficient of a solution can be obtained experimentally by taking non-temperature compensated conductivity measurements at two temperatures and then applying the following expression:

$$\propto = \frac{G_{t2} - G_{t1}}{G_{t1}[t_2 - 25) - G_{t2}(t_1 - 25)]}$$

Where G_{t2} = conductivity measurement at a temperature of t_2°C

G_{t1} = conductivity measurement at a temperature of t_1°C

One of these measurements could be made at the ambient temperature and the other obtained by heating the sample.

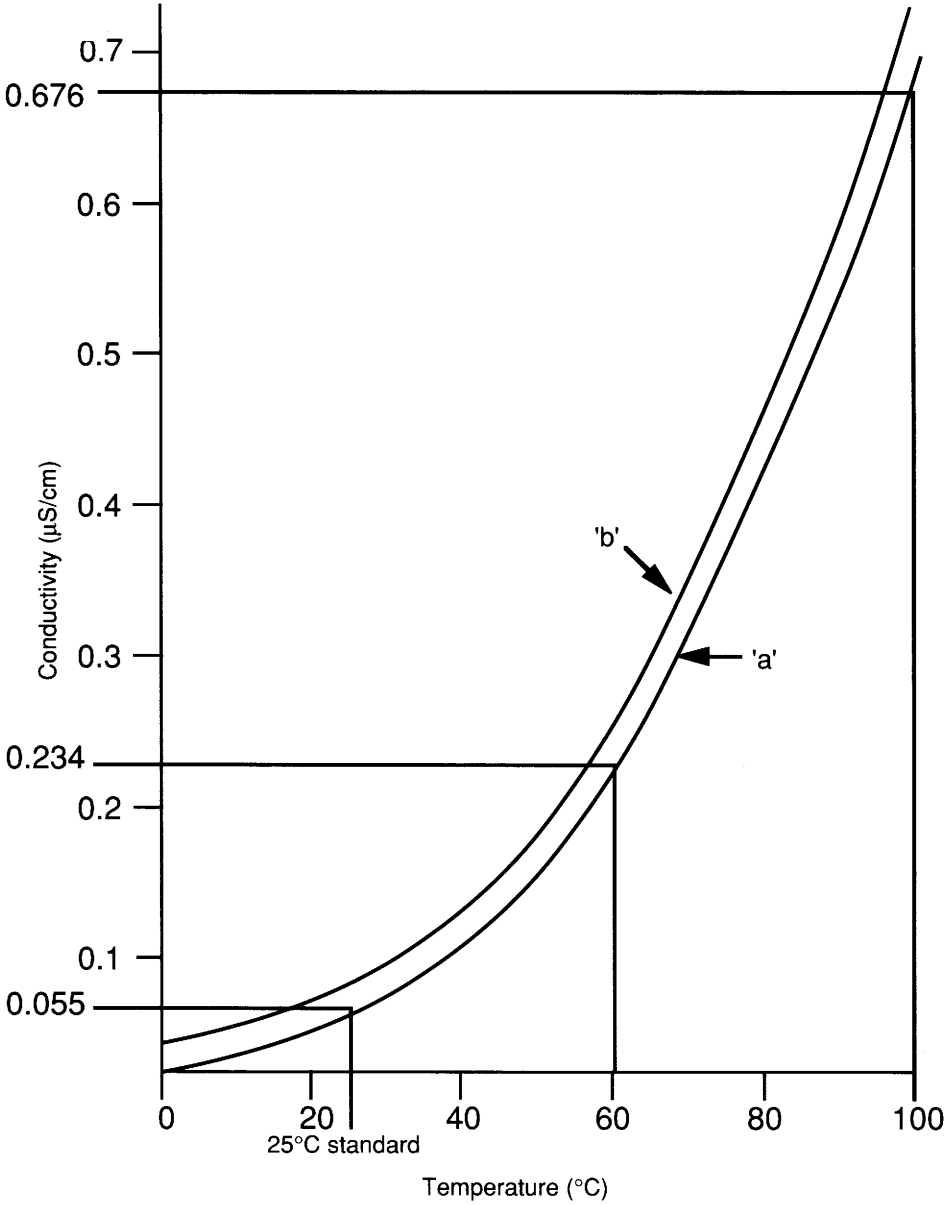

Curve 'a' – Theoretical ultra-pure water conductivity

Curve 'b' – High purity water conductivity (Ultra-pure water with slight impurity)

Fig. A3 Theoretical Ultra-pure Water Conductivity and High Purity Water Conductivity vs Temperature

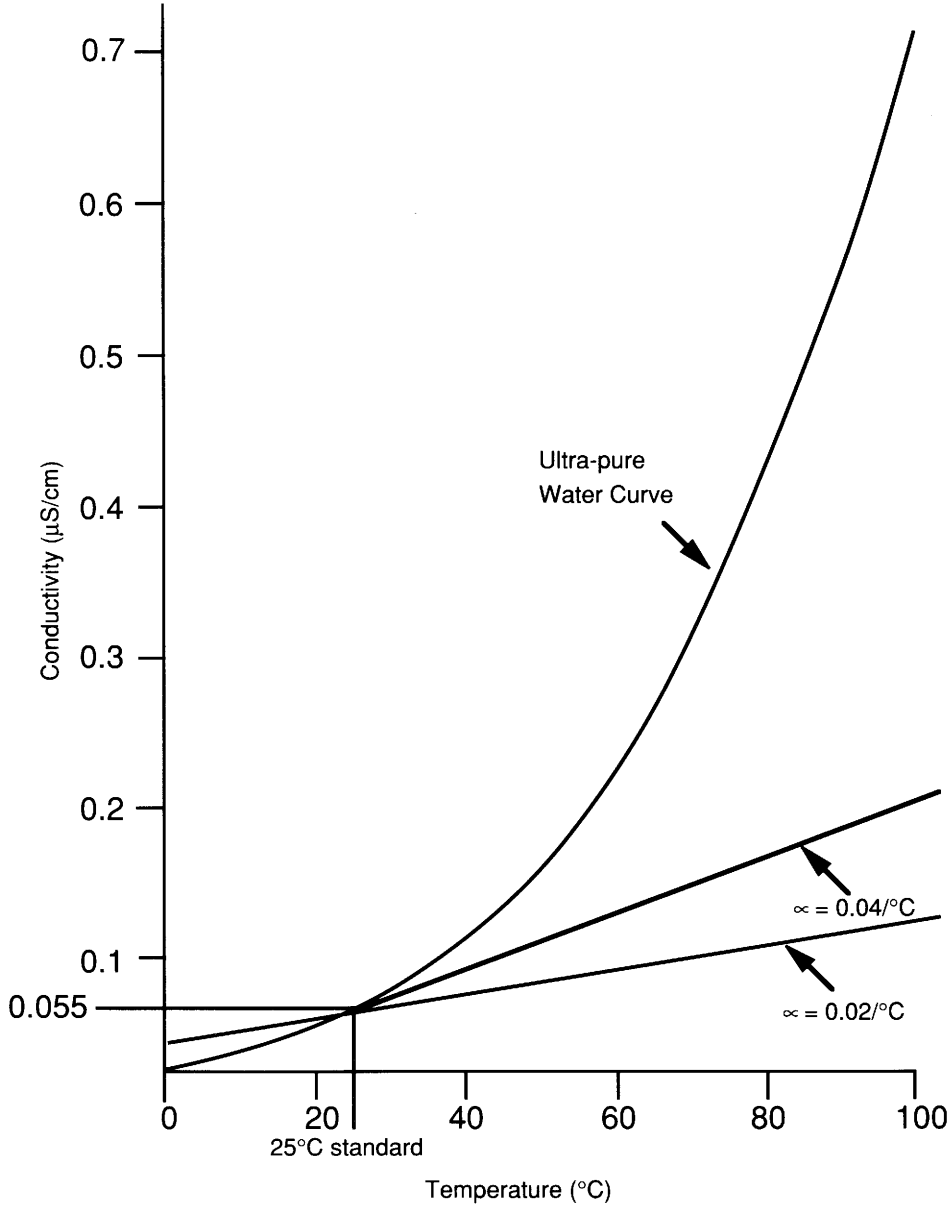

Fig. A4 Theoretical Ultra-pure Water Conductivity and Conductivity of Solutions with Constant Temperature Coefficient (∝) vs Temperature

Notes.

ABB Kent-Taylor Ltd. Worldwide

AUSTRALIA
ABB Kent-Taylor Pty Ltd
Caringbah
Tel: (02) 525 2811
Fax: (02) 526 2269

AUSTRIA AND EASTERN EUROPE
ABB Kent Europe Ltd.
Vienna, Austria
Tel: (0222) 798 3153
Fax: (0222) 799 1753

BELGIUM
SA ASEA Brown Boveri
Brussels
Tel: (02) 370 7211
Fax: (02) 332 0543

CANADA
ABB Kent-Taylor
Mississauga, Ontario
Tel: (416) 629 1428
Fax: (416) 629 3171

DENMARK
ABB Industri AS
Ballerup
Tel: (04) 686 210
Fax: (04) 682 510

EIRE
ABB (Ireland) Ltd.
Dublin
Tel: (01) 598 690
Fax: (01) 599 942

FINLAND
ABB Signal Oy
Helsinki,
Tel: (0) 50 691
Fax: (0) 506 96269

FRANCE
ABB INSTRUMENTATION
Paris
Tel: (1) 6918 1700
Fax: (1) 6907 5402

GERMANY
ABB Kent-Taylor GmbH.
Meerbusch
Tel: (021 59) 52060
Fax: (021 59) 1503

HONG KONG AND CHINA
Asea Brown Boveri Ltd
Hong Kong
Tel: (5) 846 8881
Fax: (5) 846 8900

ITALY
ABB Kent-Taylor SpA
Lenno (Como)
Tel: (0344) 58111
Fax: (0344) 56278

JAPAN
ABB Gadelius Industry KK
Kobe
Tel: (78) 991 4505
Fax: (78) 991 4910

MEXICO
ABB Kent-Taylor SA de CV
Edo de Mexico
Tel: (5) 565 4011
Fax: (5) 565 5812

NETHERLANDS
ABB Componenten BV
Ijssel
Tel: (10) 258 2290
Fax: (10) 458 6559

NEW ZEALAND
ABB Kent-Taylor Ltd
Auckland
Tel: (09) 274 6099
Fax: (09) 274 0731

NORWAY
EB Industry + Offshore AS
Porsgrunn
Tel: (03) 55 55 40
Fax: (03) 55 15 59

SINGAPORE
ABB Instrumentation (EA) Pte Ltd.
Singapore
Tel: 481 9801
Fax: 482 5110

SOUTH AFRICA
Kent Measurement Pty Ltd
Johannesburg
Tel: (011) 474 8697
Fax: (011) 474 3232

SPAIN
ABB Kent-Taylor SA
Madrid
Tel: (01) 439 9000
Fax: (01) 437 9877

UNITED STATES OF AMERICA
ABB Kent-Taylor Inc
Rochester
Tel: (716) 235 5000
Fax: (716) 235 7131

ZIMBABWE
ABB Kent International Ltd.
Harare
Tel: (4) 728804
Fax: (4) 728807

OTHER COUNTRIES
Distributors are available in most other areas of the world.

3.4.92

U.K. Service Centres

St Neots
ABB Kent-Taylor Limited
Howard Road Eaton Socon
St Neots Huntingdon
Cambridgeshire England PE19 3EU
Telephone: Huntingdon (0480) 470781
Facsimile: (0480) 470787

Falkirk
ABB Kent-Taylor Limited
Tamfourhill Industrial Estate
Tamfourhill
Falkirk, Scotland FKI 4RT
Telephone: (0324) 34110
Facsimile: (0324) 613 393

Manchester
ABB Kent-Taylor Limited
51 Lord Street
Manchester, England M3 1HL
Telephone: (061) 832 5391
Facsimile: (061) 839 0184

Newcastle
ABB Kent-Taylor Limited
10 Hannington Street
Newcastle upon Tyne, England NE6 IJT
Telephone: (091) 265 6126
Facsimile: (091) 224 0036

Stonehouse
ABB Kent-Taylor Limited
Oldends Lane
Stonehouse
Gloucestershire, England GLI0 3TA
Telephone: (0453) 82 6661
Telex: 43127 KENTFP G
Facsimile: (0453) 82 7856

ASEA BROWN BOVERI

ABB Kent-Taylor Limited
Howard Road Eaton Socon
St Neots Huntingdon
Cambridgeshire England PE19 3EU
Telephone: Huntingdon (0480) 475 321
Telex: 32676 FOSCAM G
Facsimile: (0480) 217948

ABB Kent-Taylor spa
Via Statale 113
22016 Lenno (Como)
Italy
Telephone: (0344) 58111
Telex: 380044 KENTIL I
Facsimile: (0344) 56278

ABB Kent-Taylor
95 Ames Street
PO Box 110 Rochester
New York 14692 USA
Telephone: 716 235 5000

Facsimile: 716 235 7131