Doc. N.° 1SDH002013A1615 - B2062

SACE Tmax XT

AUX SY - XT7 - Contatti ausiliari di segnalazione
AUX SY - XT7 - Auxiliary contact for circuit breaker trip status
AUX SY - XT7 - Hilfsmeldekontakte
AUX SY - XT7 - Contacts auxiliaires de signalisation 1SY - XT7
AUX SY - XT7 - Contactos auxiliares de señalización 1SY - XT7
AUX SY - XT7 - 信号辅助触点

XT7

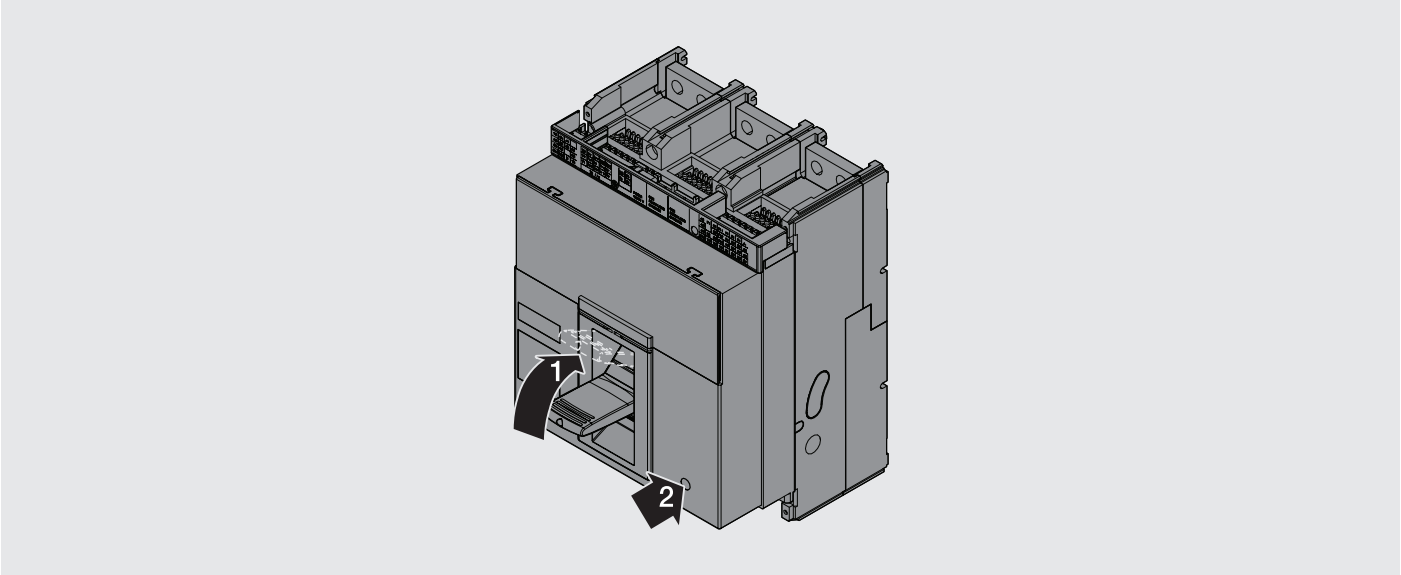

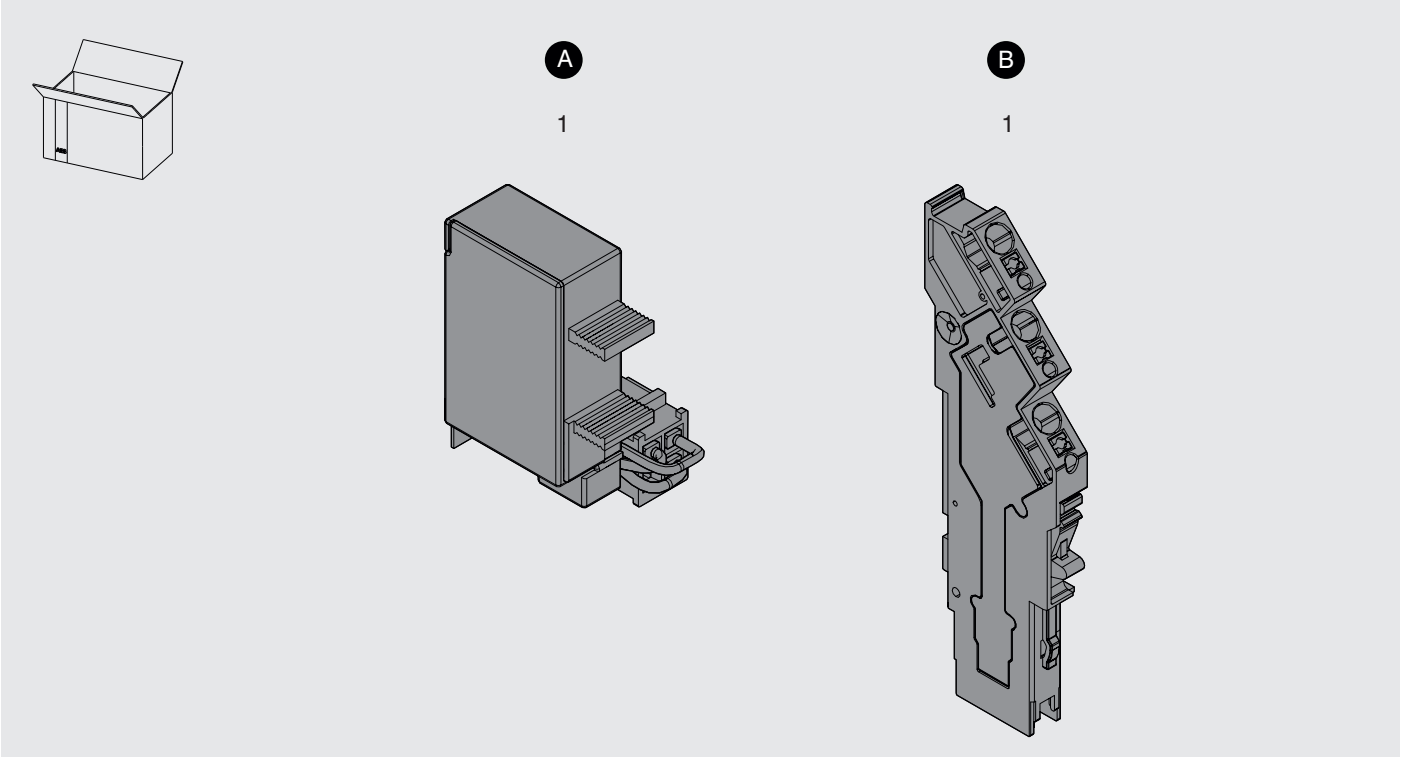

1 **F**

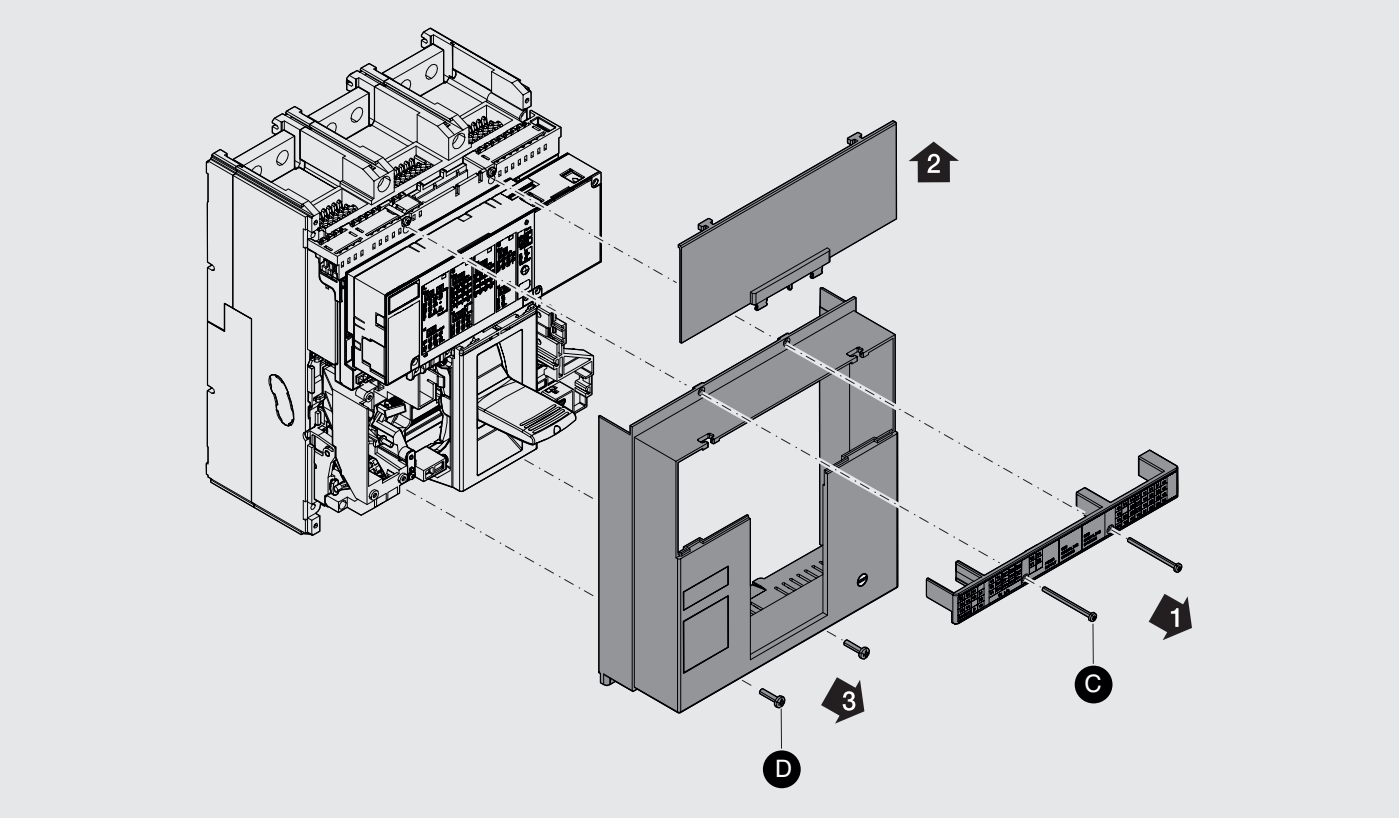

2 **F**

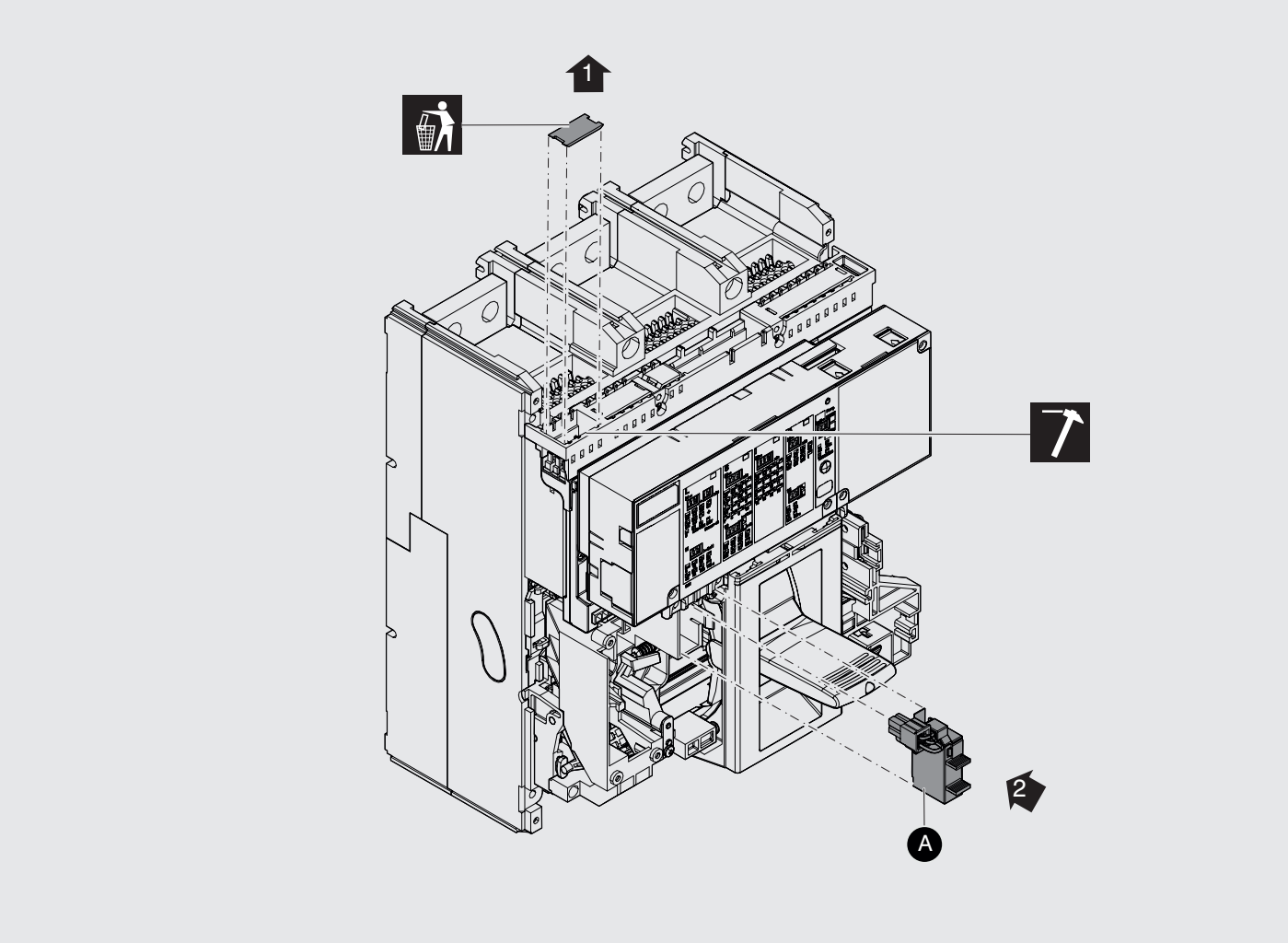

3 **F**

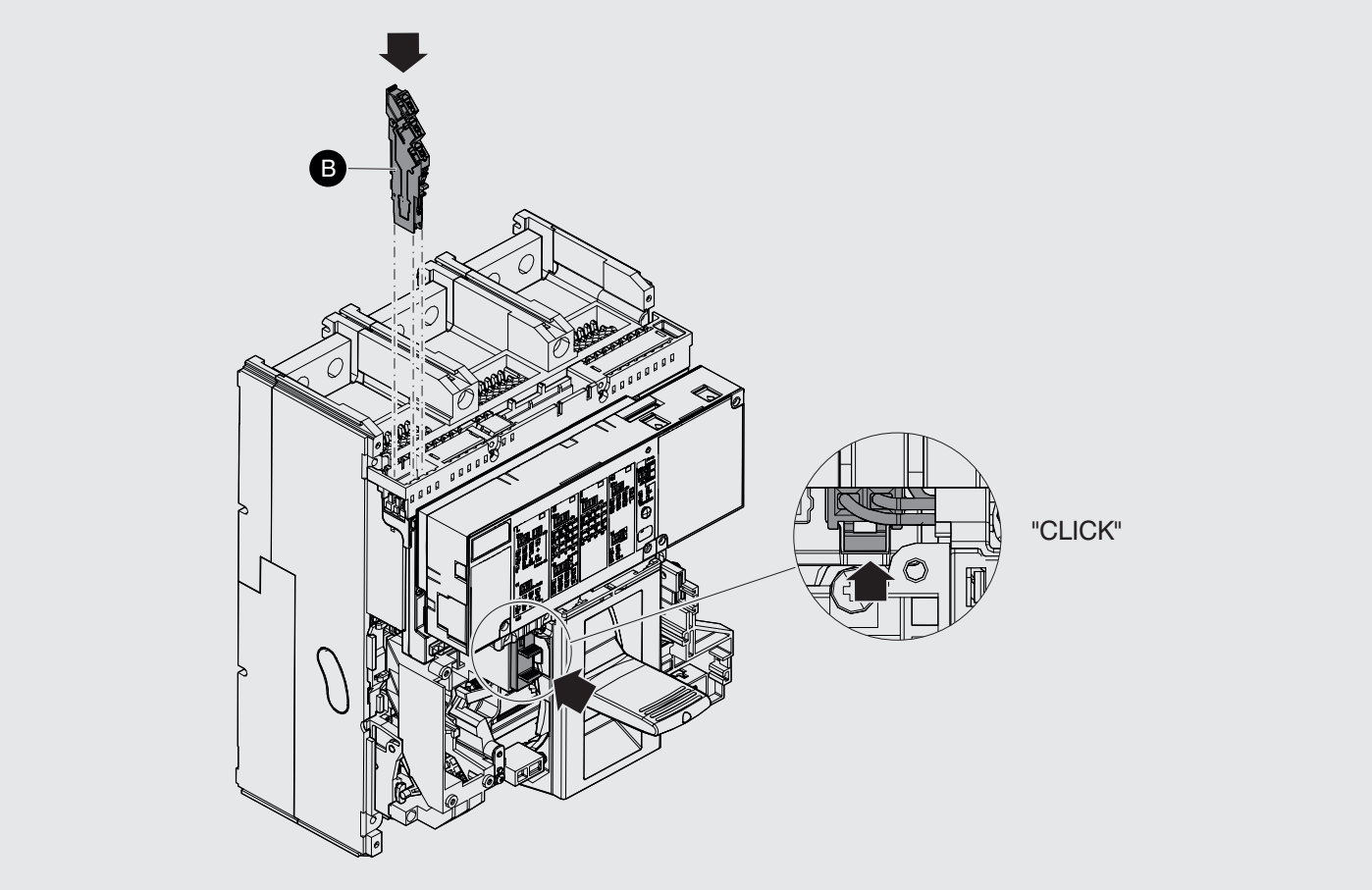

4 **F**

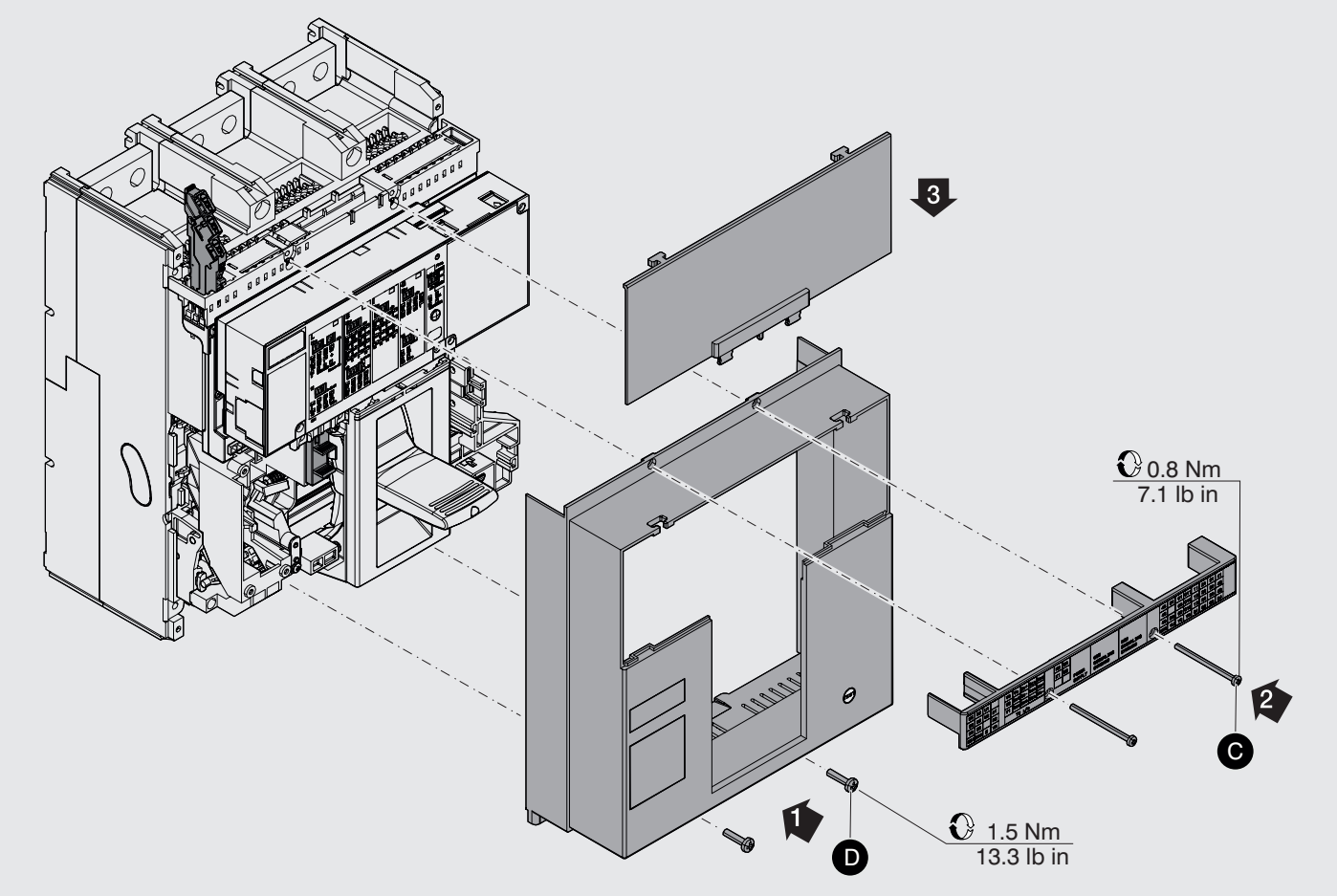

5 F

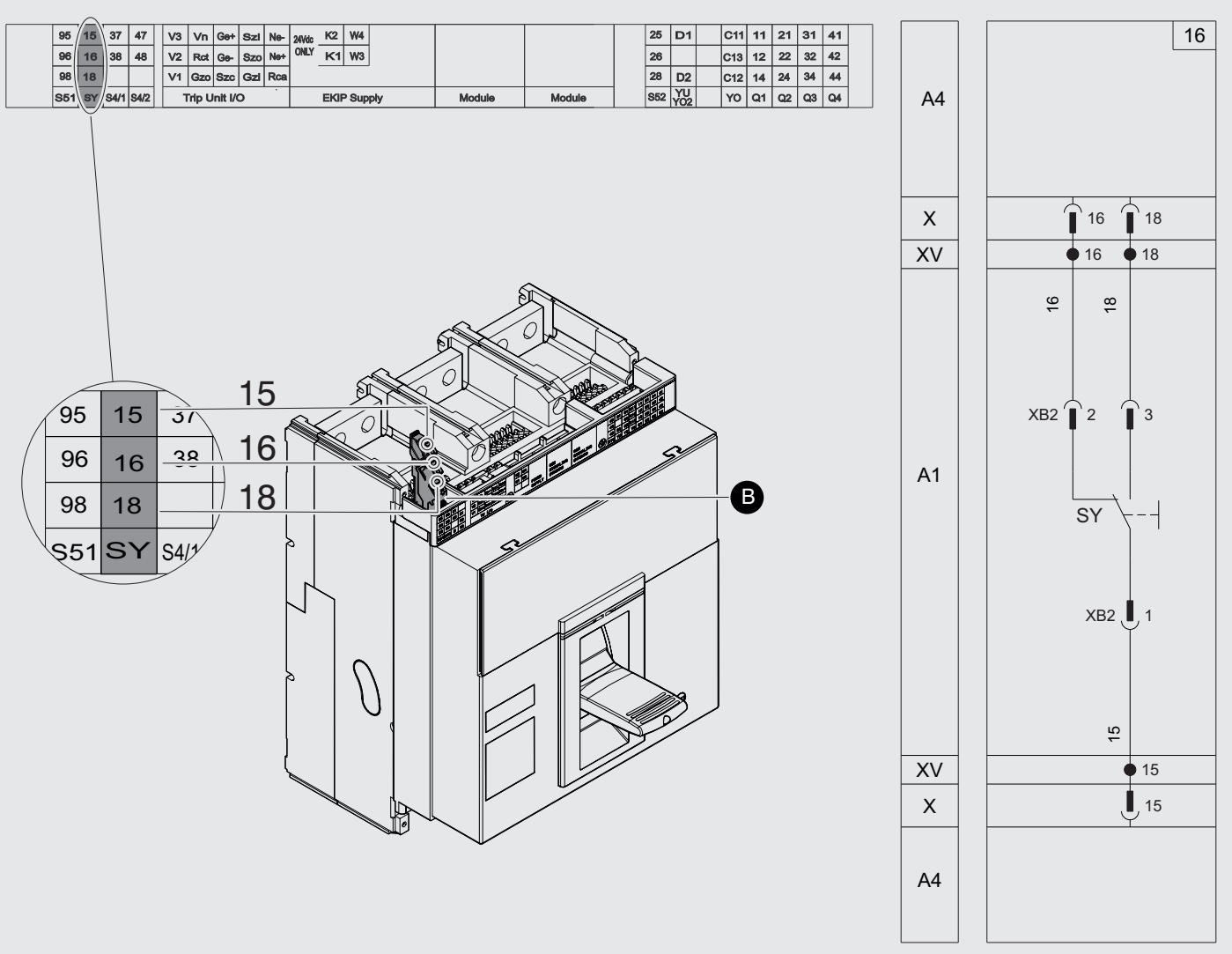
95 15 37 47
96 16 38 48
98 18
S51 SY S4/1 S4/2
V3 Vn Ge+ Szl Ne-
V2 Rct Ge- Szo Ne+
V1 Gzo Szc Gzl Rca
Trip Unit I/O
24Vdc ONLY
K2 W4
K1 W3
EKIP Supply
Module
Module
25 D1 C11 11 21 31 41
26 C13 12 22 32 42
28 D2 C12 14 24 34 44
S52 YU YO2 YO Q1 Q2 Q3 Q4
15
16
18
B
A4
X
XV
A1
XV
X
A4
16
XB2 2 3
SY
XB2 1
15

6 W

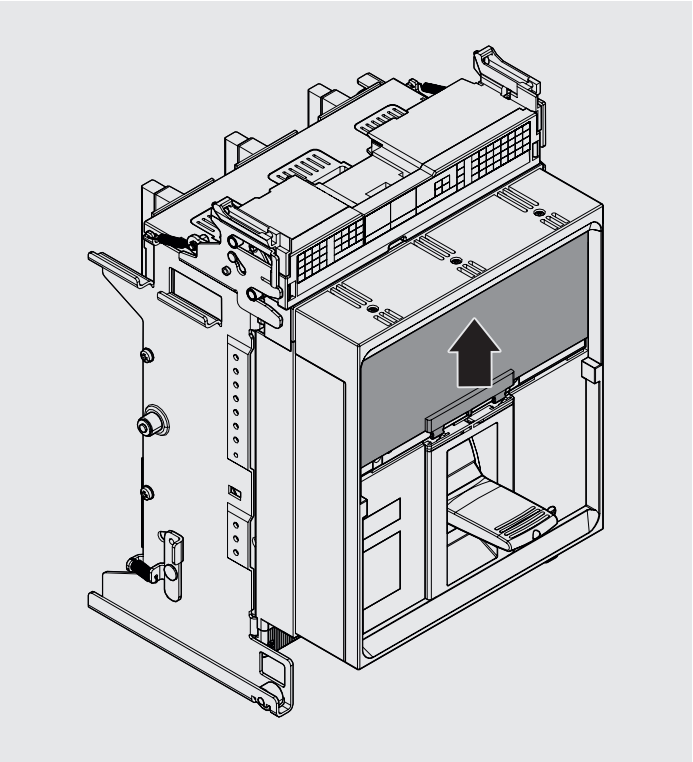

7 W

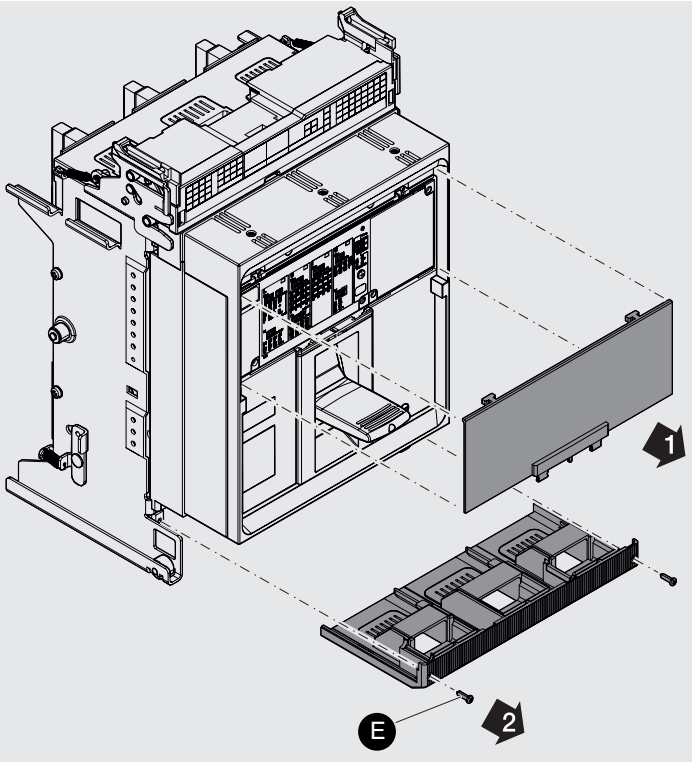
1
2
E

8 W

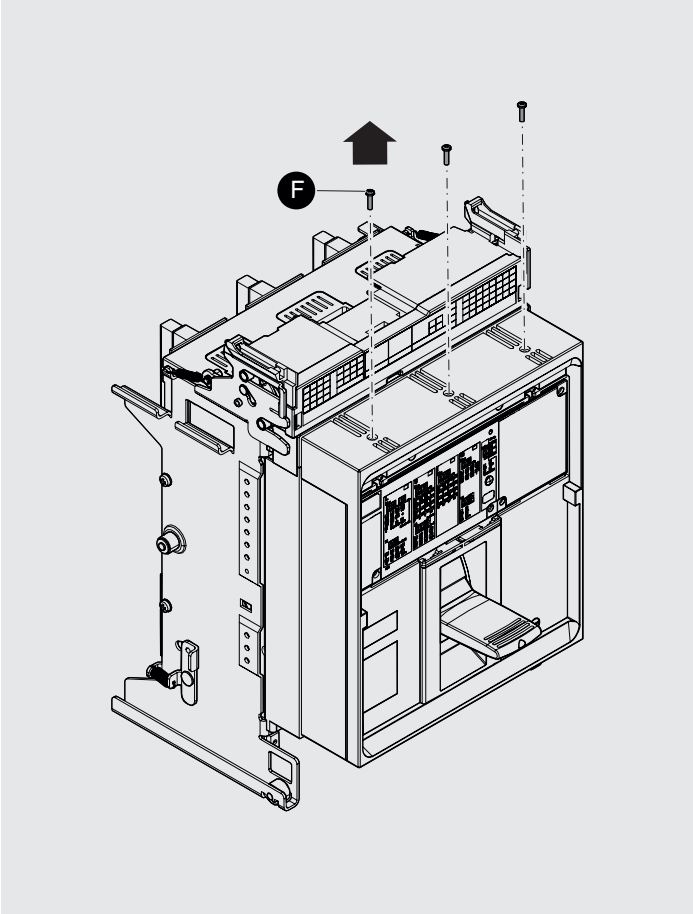

9 W

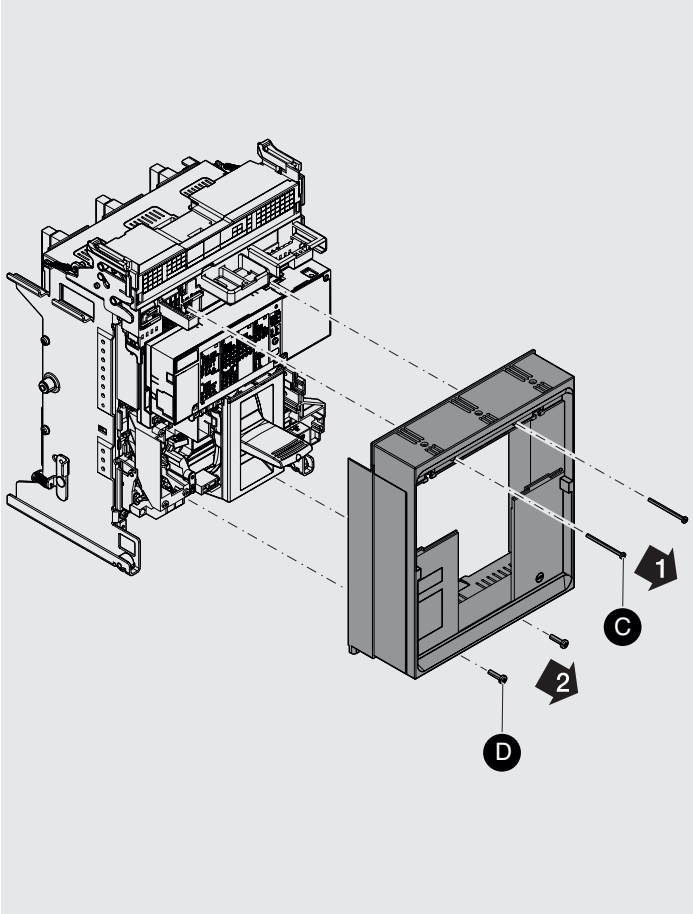

10 W

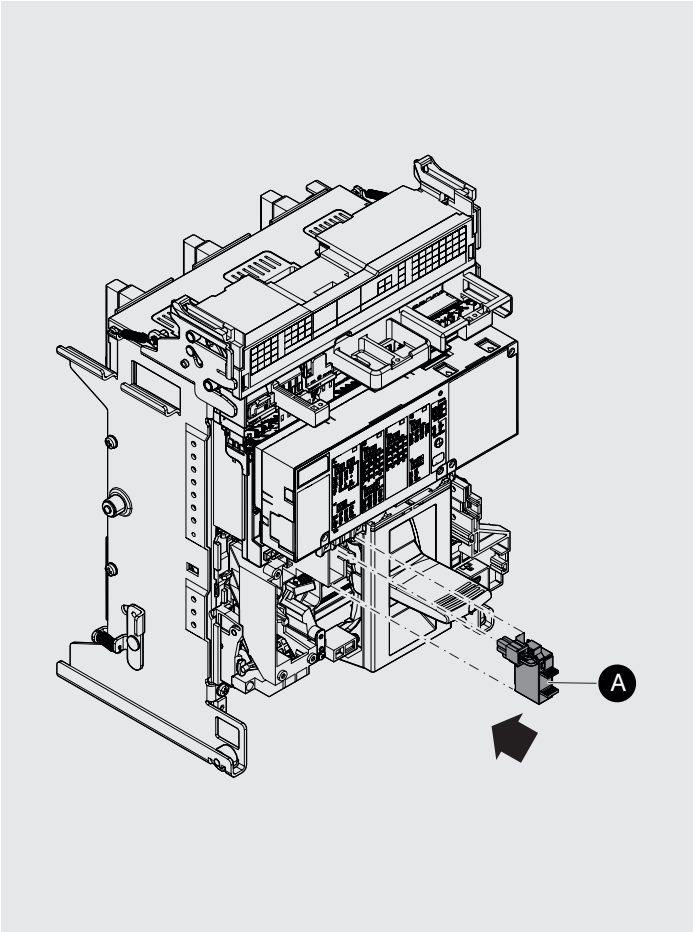

11 W

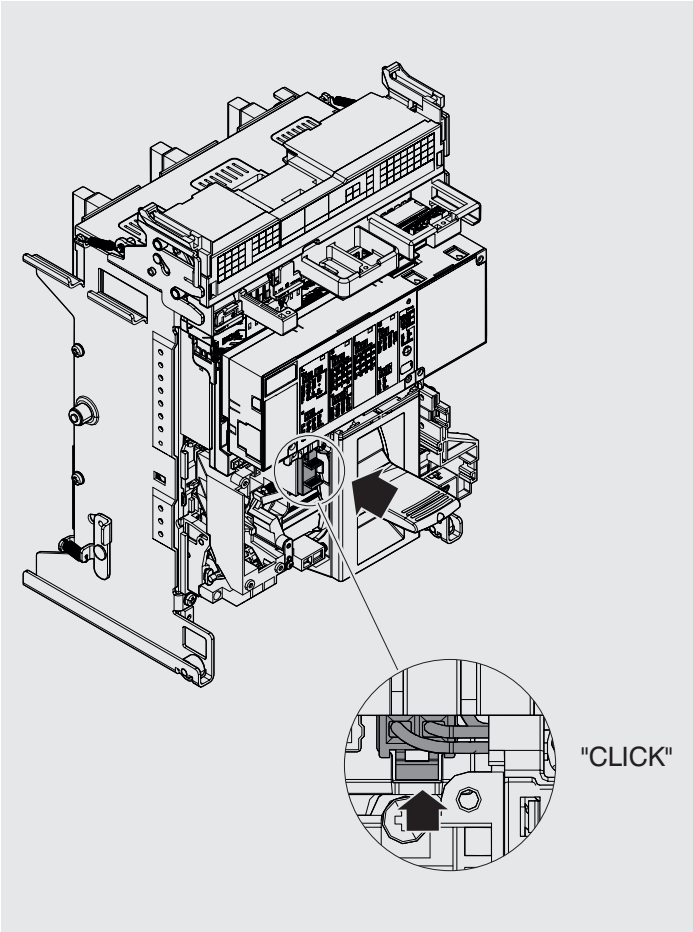

12 **W**

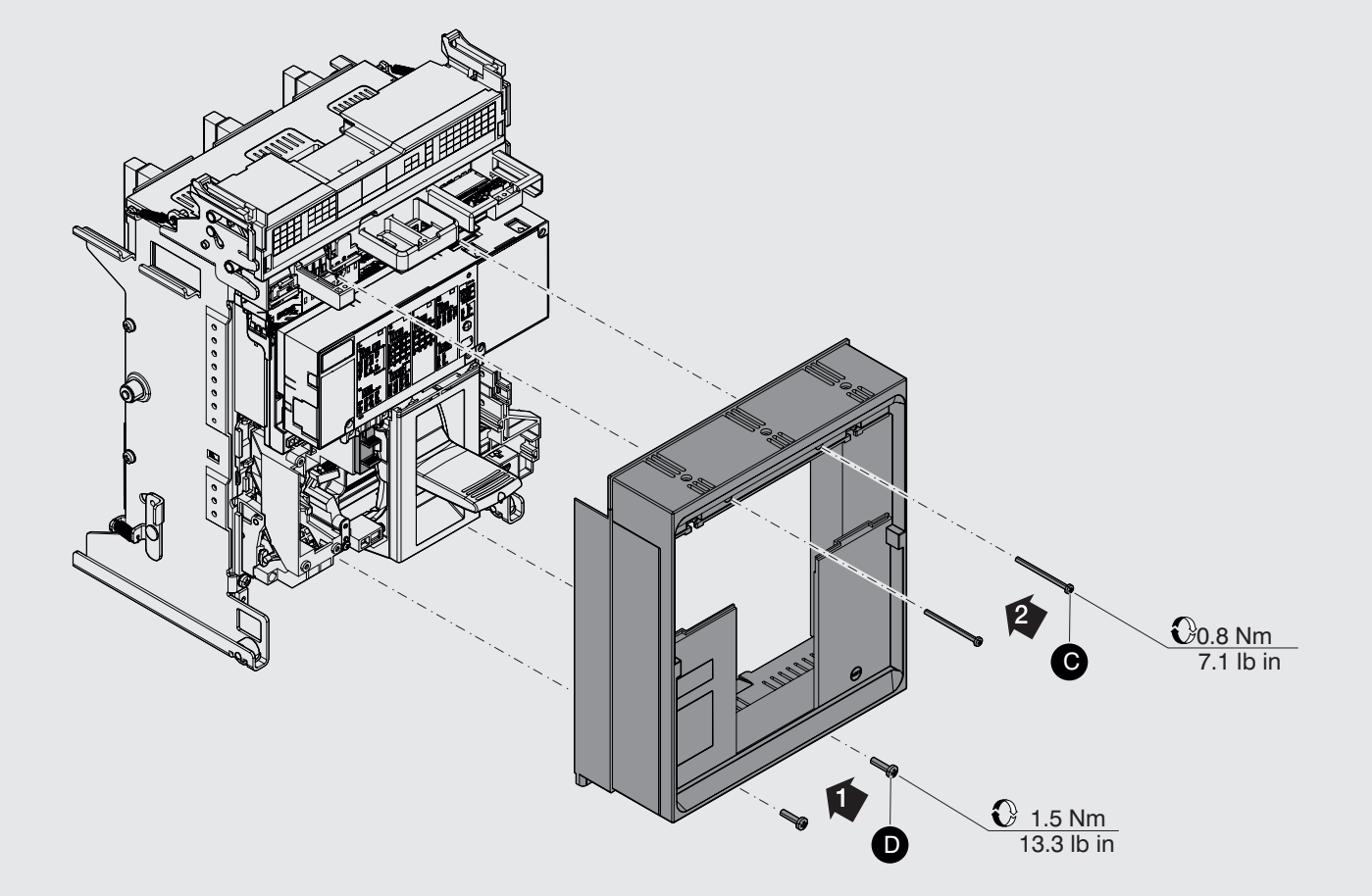

13 **W**

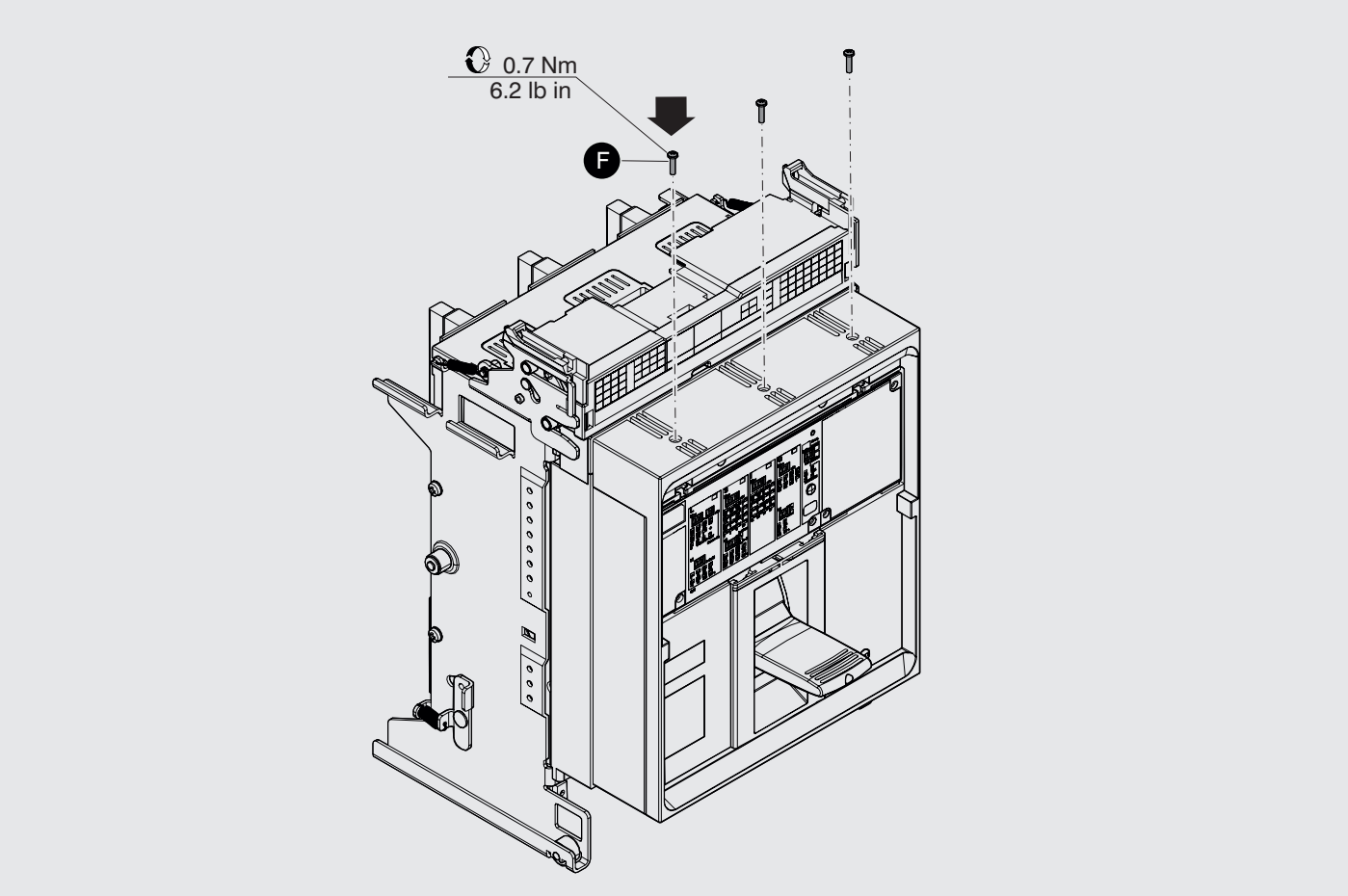

14 W

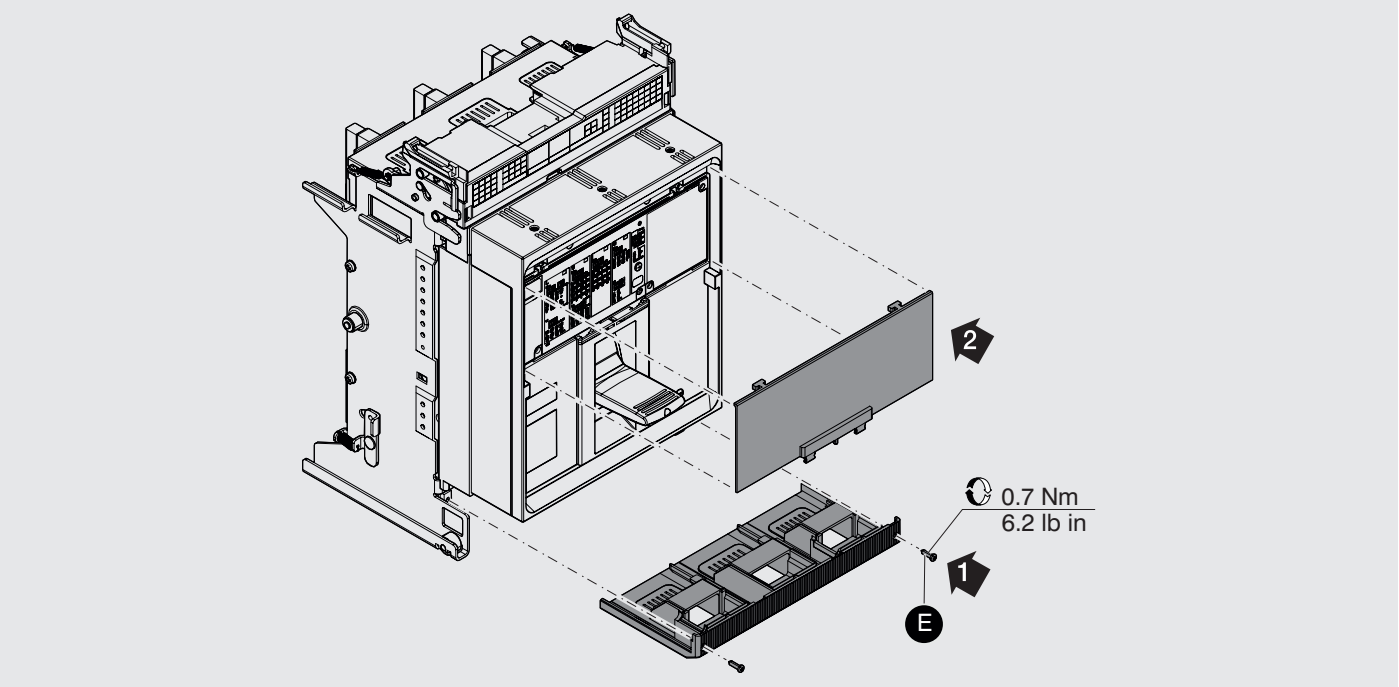
2
0.7 Nm
6.2 lb in
1
E

15 W

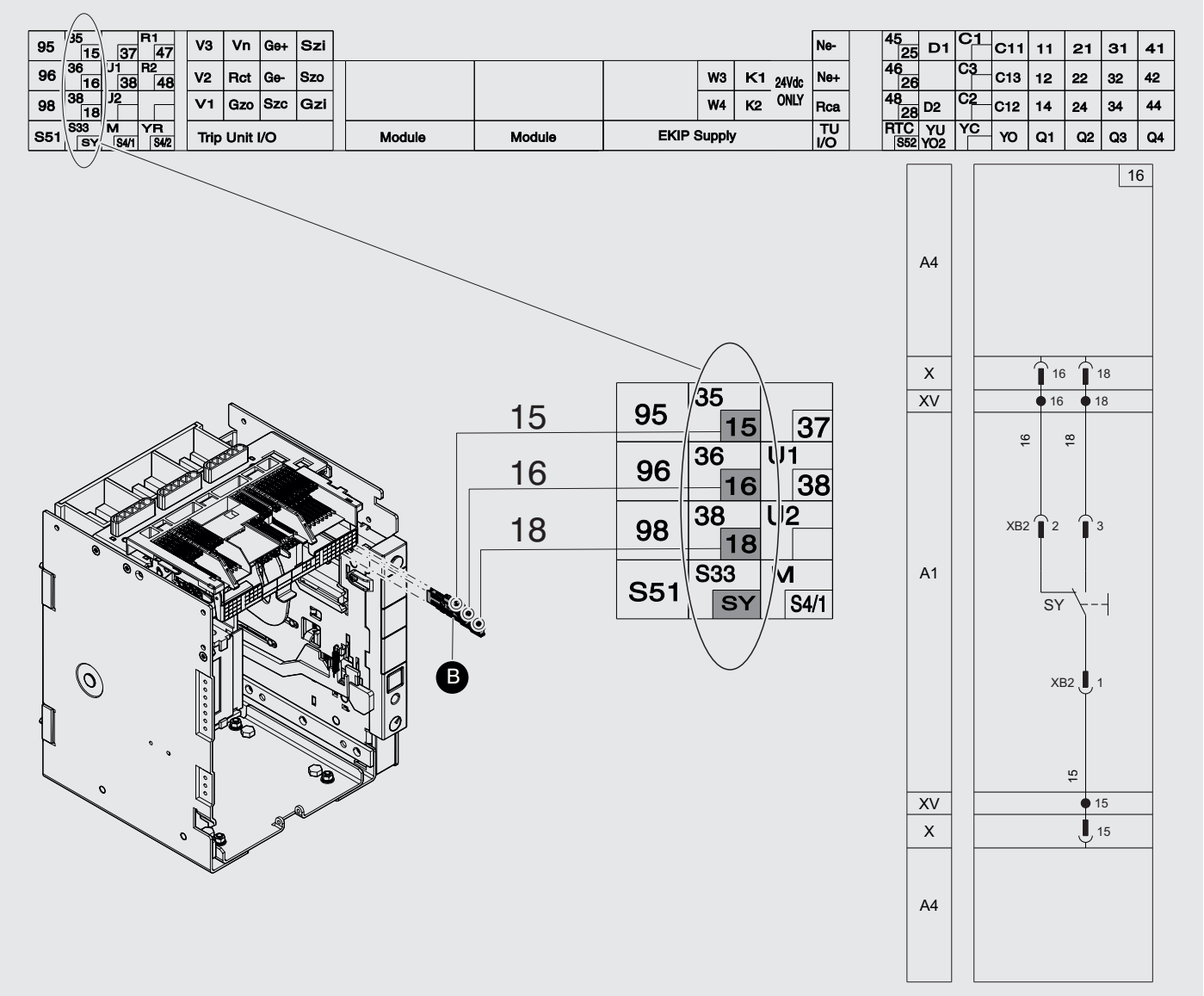
95
96
98
S51
35
15
36
16
38
18
S33
SY
37
47
J1
38
R1
R2
48
J2
M
S4/1
YR
S4/2
V3
Vn
Ge+
Szi
V2
Rct
Ge-
Szo
V1
Gzo
Szc
Gzi
Trip Unit I/O
Module
Module
W3
K1
W4
K2
24Vdc
ONLY
EKIP Supply
Ne-
Ne+
Rca
TU
I/O
45
25
46
26
48
28
D1
D2
C1
C3
C2
RTC
S52
YU
YO2
YC
C11
C13
C12
YO
11
12
14
Q1
21
22
24
Q2
31
32
34
Q3
41
42
44
Q4
15
16
18
B
A4
X
XV
A1
XV
X
A4
16
18
XB2
2
3
SY
XB2
1
15

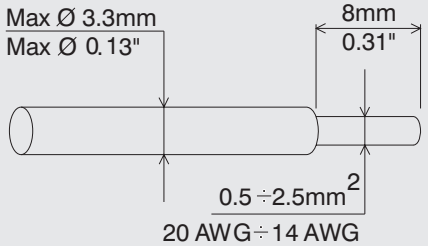

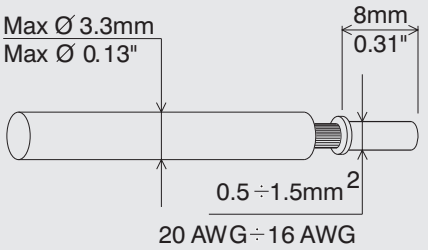

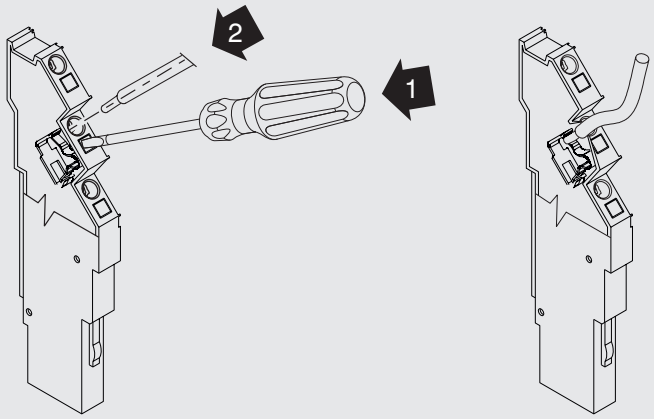

© Copyright 2013-2018 ABB. All rights reserved.
www.abb.com