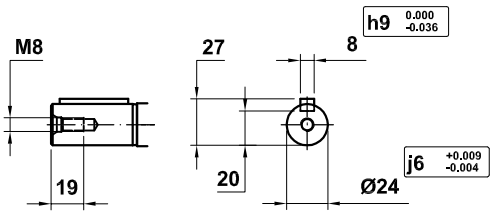

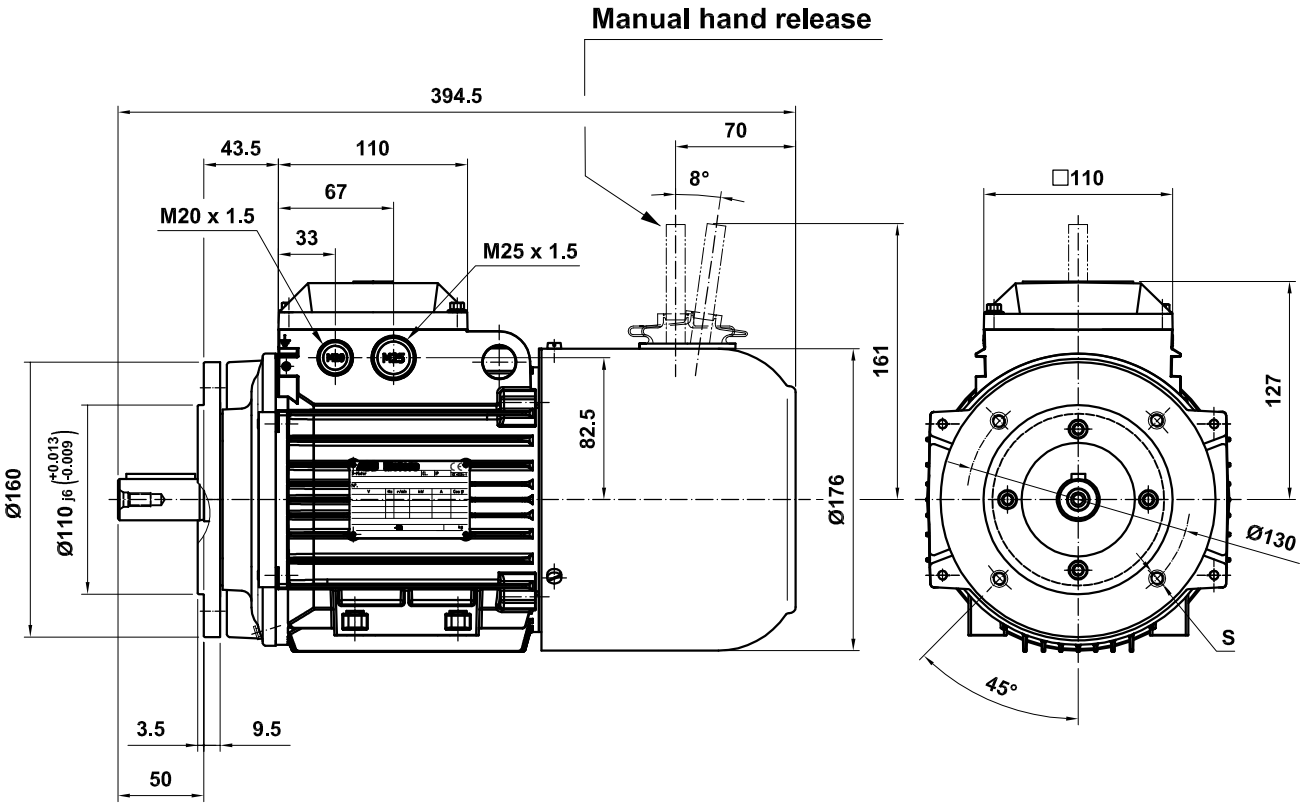

S = { Ø11 – Special IM 3001 / M8 – Special IM 3601 }

M3ARF(S) 090L

Motor Dimension Print	Motor Type : M3ARF(S) 090 L IMB5(14) FF(T)-130	Document Nº : A1.4900
Description : Brake motor flange mounted special (2-pieces) IM3001 or IM3601		
Unit : Automation Products - Fábrica Motores Date : 2008-03-31	Issued by : EMD/ G.Gállego Approved by : EMD/ G.Blanes	Replaces : Replaced by :
Asea Brown Boveri, S.A.	Customer Reference :	ABB