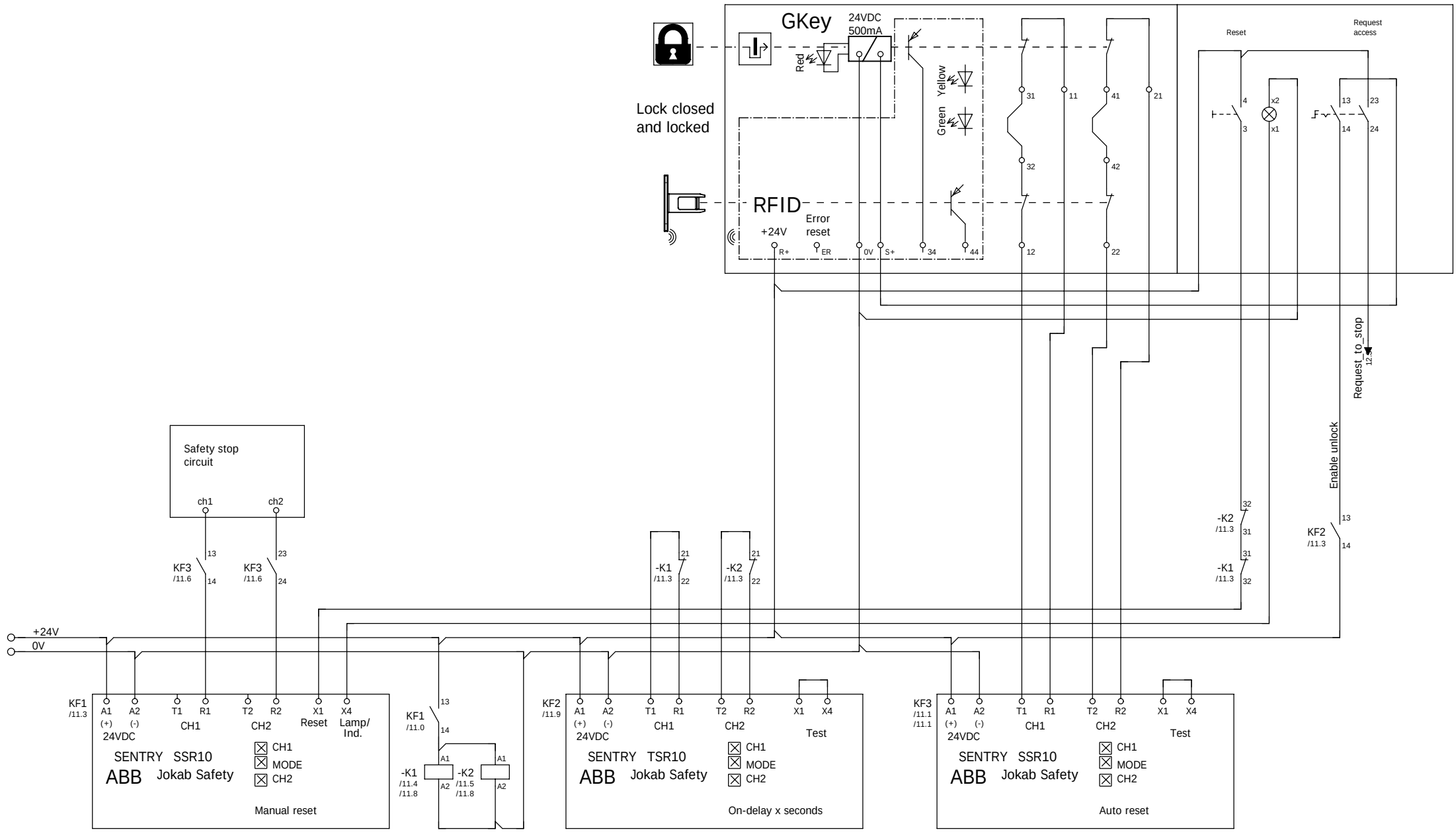

Safety stop

Safety relay with auxillary contactors to stop and interlock dangerous parts of the machine

Unlock

Safety relay, the contacts will close x seconds after the safety stop is activated.The relay will enable an unlock of the GKey switch

Door interlock

Safety relay to monitor the GKey switch.

9b

11c

			Datum	2018-12-19	ABB	ABB Jokab Safety	GKey_Delay_SENTRY_2TLC010023T0015		= GKey	
			Redigerare	SEHAHAL5					+	
			Kontollerad		New products			HHg_New	Blad	11
Ändring	Datum	Namn	Ursprung		Ersättning för	Ersatt av			Blad	19 / 23