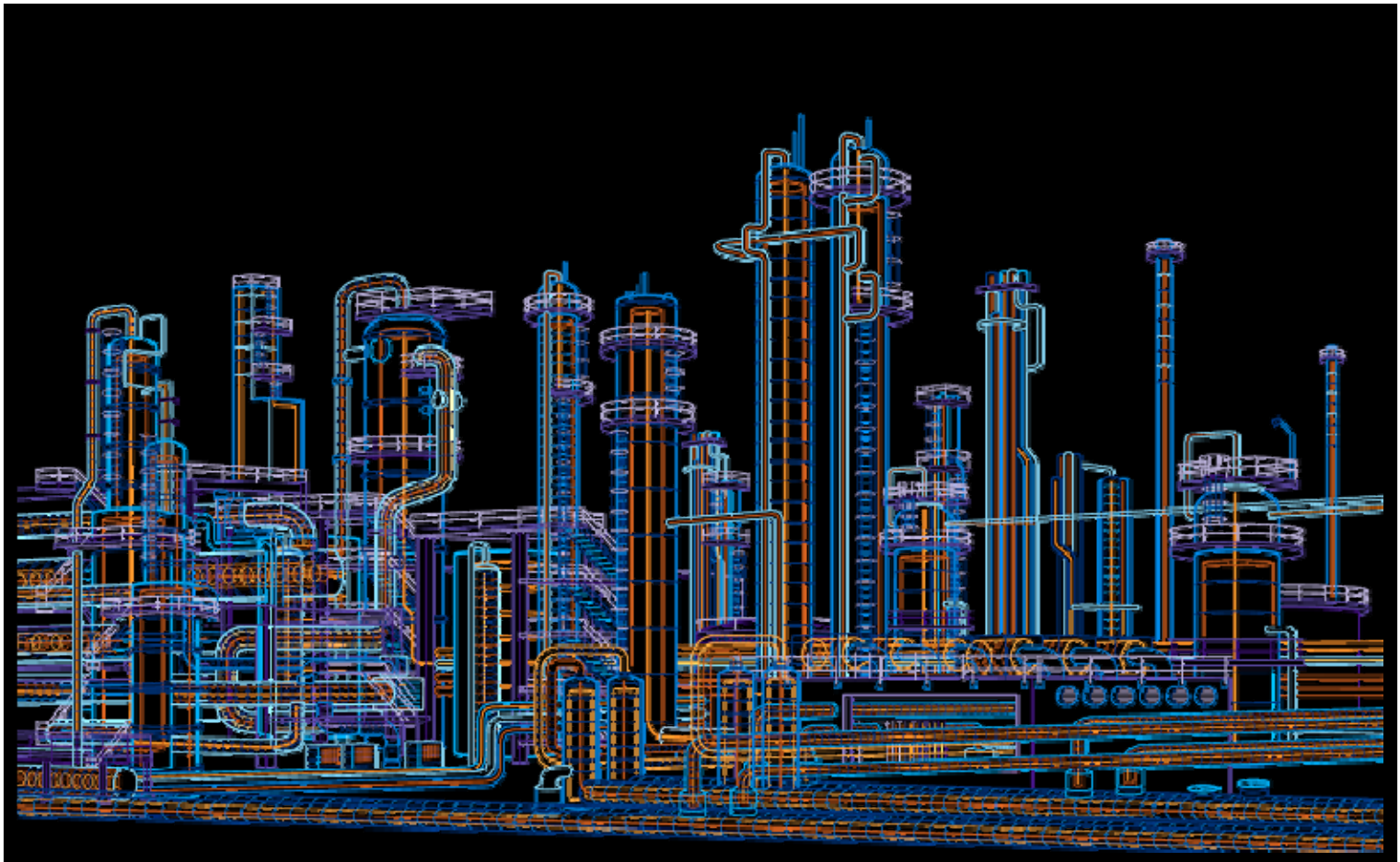

System 800xA
PC Toolkit Library for Melody
Function Diagram Template - PC_CNT_6
User Manual

System Version 5.1

Power and productivity
for a better world™

Purpose

The purpose of this document is to describe the features and functionality of the function diagram template for totalizer. This document will define the ABB Control System standards for the implementation of the Toolkit specification to be adopted across all sites and on all plants.

Conditions

The System Extension supports System 800xA System Version 5.1 or higher.

Notice

This document contains information about one or more ABB products and may include a description of or a reference to one or more standards that may be generally relevant to the ABB products. The presence of any such description of a standard or reference to a standard is not a representation that all of the ABB products referenced in this document support all of the features of the described or referenced standard.

This document and parts thereof must not be reproduced or copied without written permission from ABB, and the contents thereof must not be imparted to a third party nor used for any unauthorized purpose.

Trademarks

All rights to copyrights, registered trademarks, and trademarks reside with their respective owners.

Copyright © 2011 by ABB.

All rights reserved.

Release: 2011-06-30

Document Number: 3BDA033930R5101EN_FD_PC_CNT_6

Table of contents

1. Function 4
1.1 General Functional Description 4
1.2 Used Blocks 4
1.2.1 Function Blocks 4
1.2.2 Diagram Output References 4
1.2.3 I/O Modules 5
1.2.4 Diagram Input References 5
1.3 Function Template 6
1.4 Configurable Parameters 7
1.4.1 Function Blocks 7
1.4.2 Diagram Output References / Signal Parameters 7
1.5 Additional Information 8
2. Document References 8

1. Function

1.1 General Functional Description

The function diagram template PC_CNT_6 implements a counter device for operating pulses in the control system. The template provides the following functions:

- Display of the current counter value (PCNT) and the counter value during the last counter reset (POLD)
- Resetting of the counter through a higher-level control (event-driven or cyclically)
- Standard counting function
- Supervision of the signal against a limit (Limit value for pulse (LVP)). Whenever a limit is violated, an alarm/event is generated (depending on the alarm/event configuration)

1.2 Used Blocks

1.2.1 Function Blocks

Function Block	Name	Library	Description
TP_CNT-00	PC_CNT_6	Binary	Time and Pulse counter Standard Function Block description see /5/ Operation description see /1/
EQ-I0	PC_CNT_6	Analog/Binary	Analog comparator A=B Integer
DYNOR-00	PC_CNT_6	Binary	OR dynamic Boolean
ADD-I0	PC_CNT_6	Analog	Adder Integer
DELAY-00	PC_CNT_6	Binary	Delay Boolean
OR-B0	PC_CNT_6	Binary	OR Boolean

Table 1.1 Function Blocks

1.2.2 Diagram Output References

Signal	Data Type	Description
LVPR01	BINARY	Period counting function
O01	BINARY	Period counting function
O02	BINARY	Period counting function
O03	BINARY	Period counting function
PCNT01	ANALOG	Period counting function
POLD01	ANALOG	Period counting function
STA01	PACKED	Period counting function

Table 1.2 Function Diagram Output References

1.2.3 I/O Modules

No I/O modules used in this function diagram template.

1.2.4 Diagram Input References

The diagram input references are not connected in this function diagram template.

1.3 Function Template

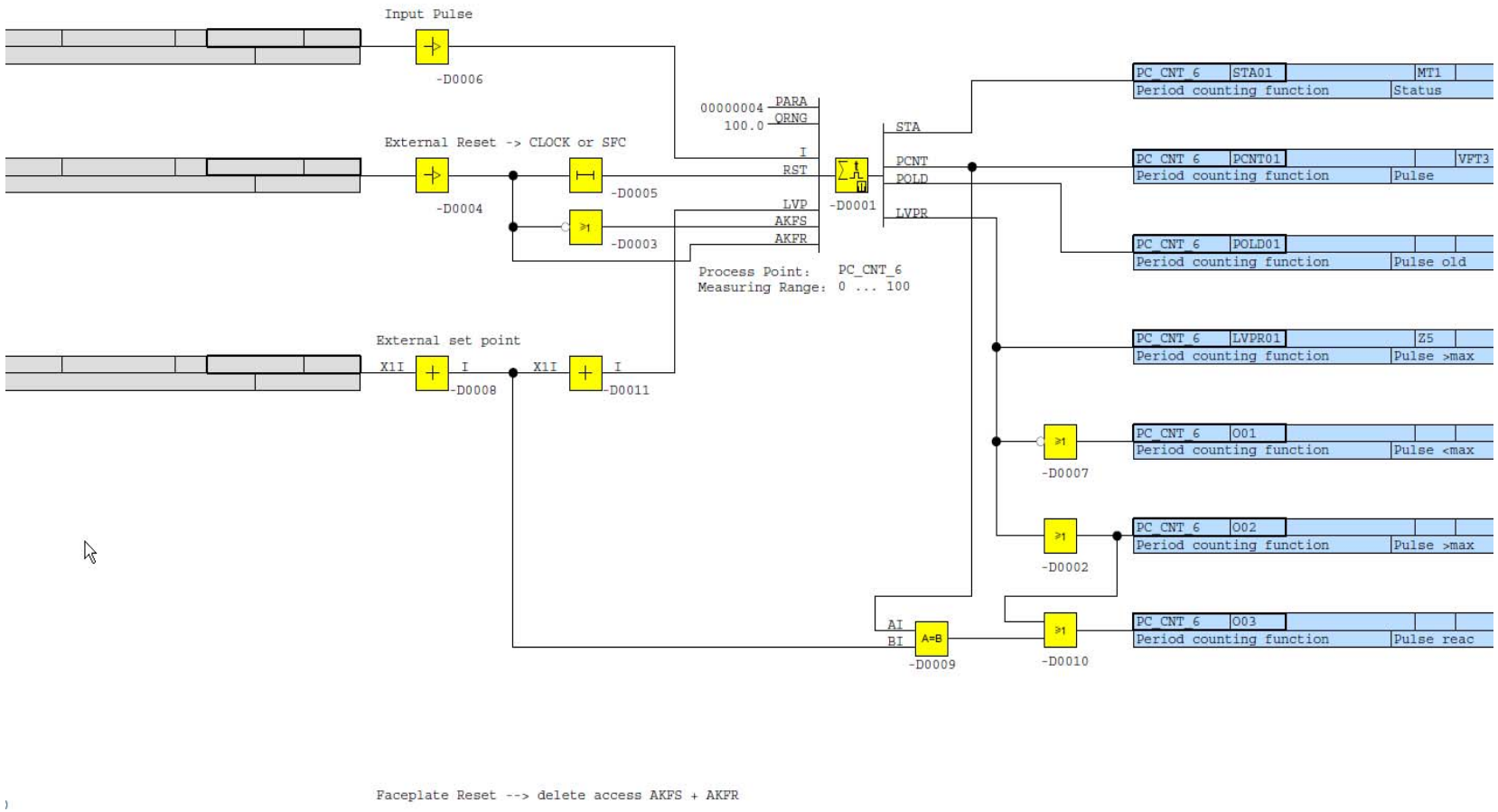

Figure 1.1 Function Template PC_CNT_6

1.4 Configurable Parameters

The following parameters are in the function diagram template and can be engineered using Excel sheet data mechanisms.

In general function block parameters and signals can be exported to Excel sheet and can be engineered and imported.

1.4.1 Function Blocks

The visible and not connected parameters in the function diagram template are in **Bold**.

PC_CNT_2

Function Block	Input	Value	Data Type	Description
DELAY-00	RS1	0	Bool	Reset
DELAY-00	RS2	0	Bool	Reset
DELAY-00	T1	0:00:01.000	Duration	Delay in starting
DELAY-00	T2	0:00:00.000	Duration	Drop delay
DYNOR-00	T	0:00:02.000	Duration	Time value
DYNOR-00	T	0:00:02.000	Duration	Time value
TP_CNT-00	AKFR	Connected	Bool	Reset access lock
TP_CNT-00	AKFS	Connected	Bool	Set access lock
TP_CNT-00	I	Connected	Bool	Input boolean
TP_CNT-00	LVP	Connected	Bool	Limit value pulse
TP_CNT-00	LVT	1.0	Real	Limit value time
TP_CNT-00	MDO	00000000	Packed Bool	Oper. word operation
TP_CNT-00	**PARA**	**00000004**	**Packed Bool**	**PBool**
TP_CNT-00	**QRNG**	**100.0**	**Real**	**Quantity value value range**
TP_CNT-00	RST	Connected	Bool	Reset
TP_CNT-00	SVP	0	Bool	Start value pulse
TP_CNT-00	SVT	0.0	Packed Bool	Start value time

Table 1.3 Parameters of Function Block PC_CNT_6

1.4.2 Diagram Output References / Signal Parameters

PC_CNT_2

Signal	Data Type	Value High	Value Low	Alarm Template	Archive Template
LVPR01	BINARY	Pulse >max	Pulse <max	Z5	
O01	BINARY	Pulse <max			

Signal	Data Type	Value High	Value Low	Alarm Template	Archive Template
O02	BINARY	Pulse >max			
O03	BINARY	Pulse reac			
PCNT01	ANALOG	Pulse			Fast_7d
POLD01	ANALOG	Pulse old			
STA01	PACKED	Status		MT1	

Table 1.4 Signal Parameters of PC_CNT_6

1.5 Additional Information

- In the input configuration of “I” and in the tab quality a substitute value (HIGH, LOW or actual value) can be defined.
-

2. Document References

Ref.	Document title	Document number
/1/	System 800xA PC Toolkit Library for Melody – Operation, User Manual	3BDA033439R5101EN
/2/	System 800xA PC Toolkit Library for Melody – Installation and Configuration, User Manual	3BDA033456R5103EN
/3/	S+ Engineering Function Blocks Operation	2VAA000580-530
/4/	S+ Engineering: Function Blocks Analog / Binary	2VAA000571-530
/5/	S+ Engineering: Function Blocks Binary	2VAA000572-530
/6/	S+ Engineering: Function Blocks Analog	2VAA000570-530

Table 2.1 References

3BDA033930R5101EN_FD_PC_CNT_6 Germany Jul 2011

Copyright © 2011 by ABB. All Rights Reserved
® Registered Trademark of ABB.
™ Trademark of ABB.

BU Oil, Gas and Petrochemical
Frankfurt, Germany
www.abb.com/chemicals