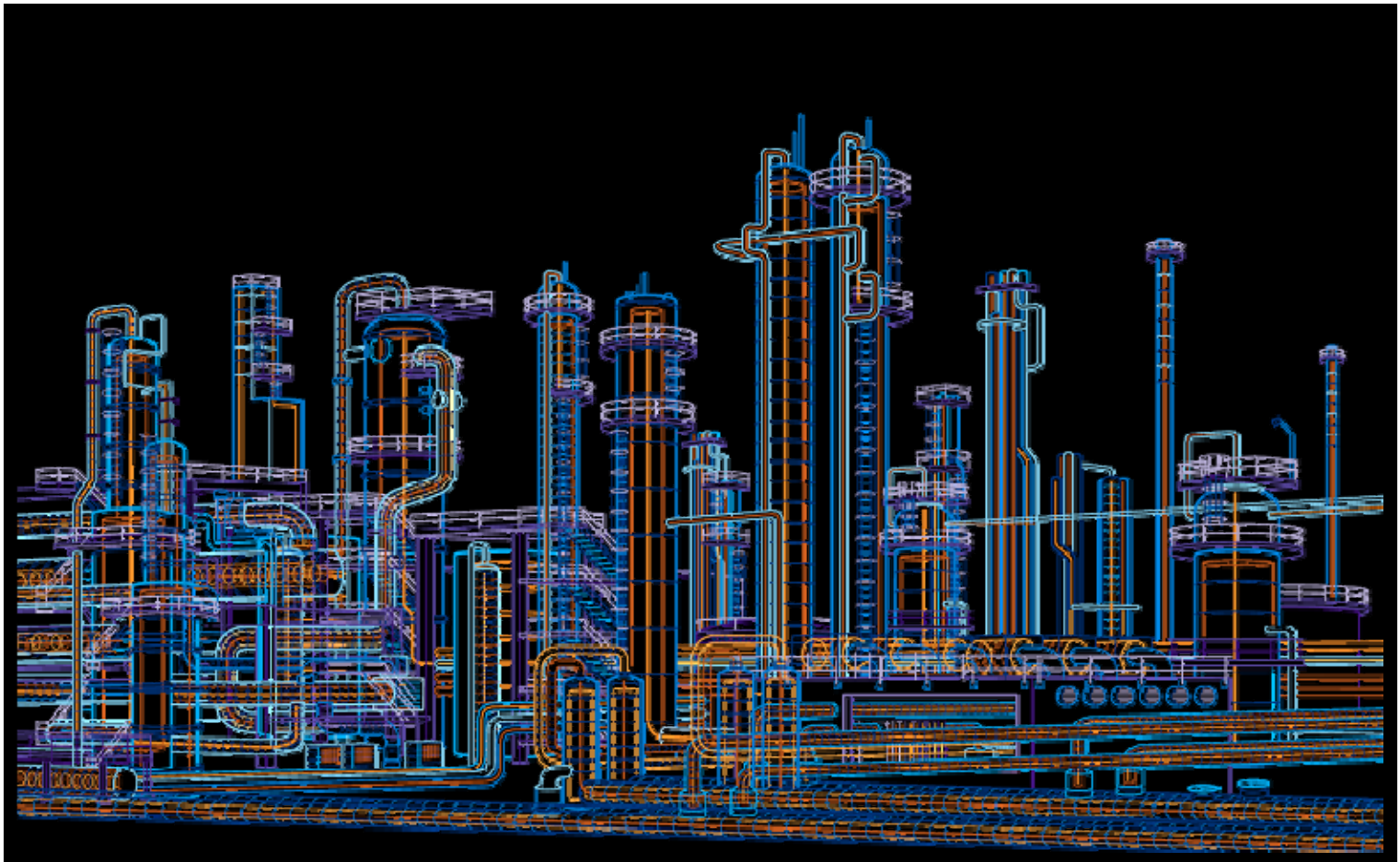

System 800xA
PC Toolkit Library for Melody
Function Diagram Template - PC_DOS_1
User Manual

System Version 5.1

Power and productivity
for a better world™

Purpose

The purpose of this document is to describe the features and functionality of the function diagram template for a dosage module. This document will define the ABB Control System standards for the implementation of the Toolkit specification to be adopted across all sites and on all plants.

Conditions

The System Extension supports System 800xA System Version 5.1 or higher.

Notice

This document contains information about one or more ABB products and may include a description of or a reference to one or more standards that may be generally relevant to the ABB products. The presence of any such description of a standard or reference to a standard is not a representation that all of the ABB products referenced in this document support all of the features of the described or referenced standard.

This document and parts thereof must not be reproduced or copied without written permission from ABB, and the contents thereof must not be imparted to a third party nor used for any unauthorized purpose.

Trademarks

All rights to copyrights, registered trademarks, and trademarks reside with their respective owners.

Copyright © 2011 by ABB.

All rights reserved.

Release: 2011-06-30

Document Number: 3BDA033930R5101EN_FD_PC_DOS_1

Table of contents

1. Function 4
1.1 General Functional Description 4
1.2 Used Blocks 4
1.2.1 Function Blocks 4
1.2.2 Diagram Output References 5
1.2.3 I/O Modules 5
1.2.4 Diagram Input References 5
1.3 Function Template 6
1.4 Configurable Parameters 9
1.4.1 Function Blocks 9
1.4.2 Diagram Output References / Signal Parameters 11
1.5 Additional Information 12
1.6 Performance of the function in a fault scenario 12
2. Document References 13

1. Function

1.1 General Functional Description

The function diagram template PC_DOS_1 implements a dosage module in the control system. The counting input can be an analog input or a digital input. The template includes the following functions:

- Specification of the final dosing value (set point) by the operator or by a higher-level control system
- Specification of the pre-dosing set point via an external circuit or by parameter entry
- Start/Stop/Reset of the proportioning counter by the operator or by a higher-level control system
- Coarse/Fine dosing
- Manual after-dosing by the operator
- Specification of the basic value by an external circuit or by a higher-level control system
- Correction of the dribble amount
- Flow monitoring with start-up override
- Status indication of the dosing in the faceplate (CLOSED, fine dosing, coarse dosing)
- Operating modes manual and automatic

1.2 Used Blocks

1.2.1 Function Blocks

Function Block	Name	Library	Description
DOS-03	PC_DOS_1	OLC	Dosing function new Function Block description see /6/ Operation description see /1/
AND-B0	PC_DOS_1	Binary	AND Boolean
OR-B0	PC_DOS_1	Binary	OR Boolean
DELAY-00	PC_DOS_1	Binary	Delay Boolean
SWTV1-R0	PC_DOS_1	Analog/Binary	Changeover switch Real
DYNOR-00	PC_DOS_1	Binary	OR dynamic Boolean
LWR-R0	PC_DOS_1	Analog/Binary	Write value with enable Real
EQ-R0	PC_DOS_1	Analog/Binary	Analog comparator A=B Real
CONPSRC	PC_DOS_1	Connectors	Connector source
CONPSNK	PC_DOS_1	Connectors	Connector sink

Function Block	Name	Library	Description
BSFUP_P	PC_DOS_1		Bit select function diagram

Table 1.1 Function Blocks

1.2.2 Diagram Output References

Signal	Data Type	Description
CSY01	ANALOG	Dosage Module
DRO01	BINARY	Dosage Module
DSTO01	BINARY	Dosage Module
FULL01	BINARY	Dosage Module
O01	BINARY	Dosage Module
O02	BINARY	Dosage Module
O03	BINARY	Dosage Module
O04	BINARY	Dosage Module
O05	BINARY	Dosage Module
O06	BINARY	Dosage Module
OAUT01	BINARY	Dosage Module
OCER01	BINARY	Dosage Module
OMAN01	BINARY	Dosage Module
PART01	BINARY	Dosage Module
QWY01	ANALOG	Dosage Module
RTY01	ANALOG	Dosage Module
SOVO01	BINARY	Dosage Module
STA01	PACKED	Dosage Module
STA02	PACKED	Dosage Module
W+Y01	ANALOG	Dosage Module
WO01	BINARY	Dosage Module
WY01	ANALOG	Dosage Module

Table 1.2 Function Diagram Output References

1.2.3 I/O Modules

No diagram input references used in this function diagram template.

1.2.4 Diagram Input References

The diagram input references are not connected in this function diagram template.

1.3 Function Template

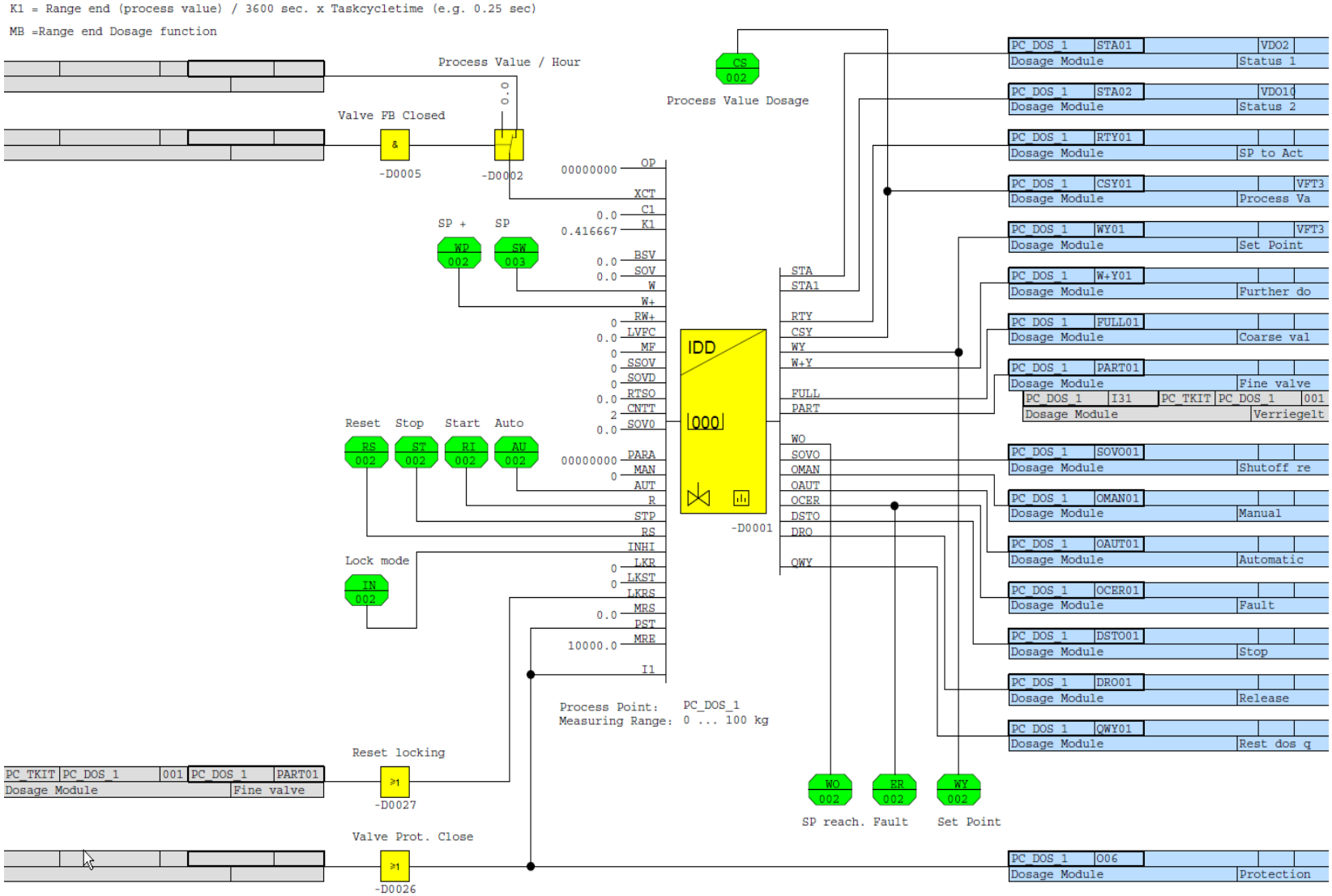

Figure 1.1 Function Template PC_DOS_1 (Page 1/3)

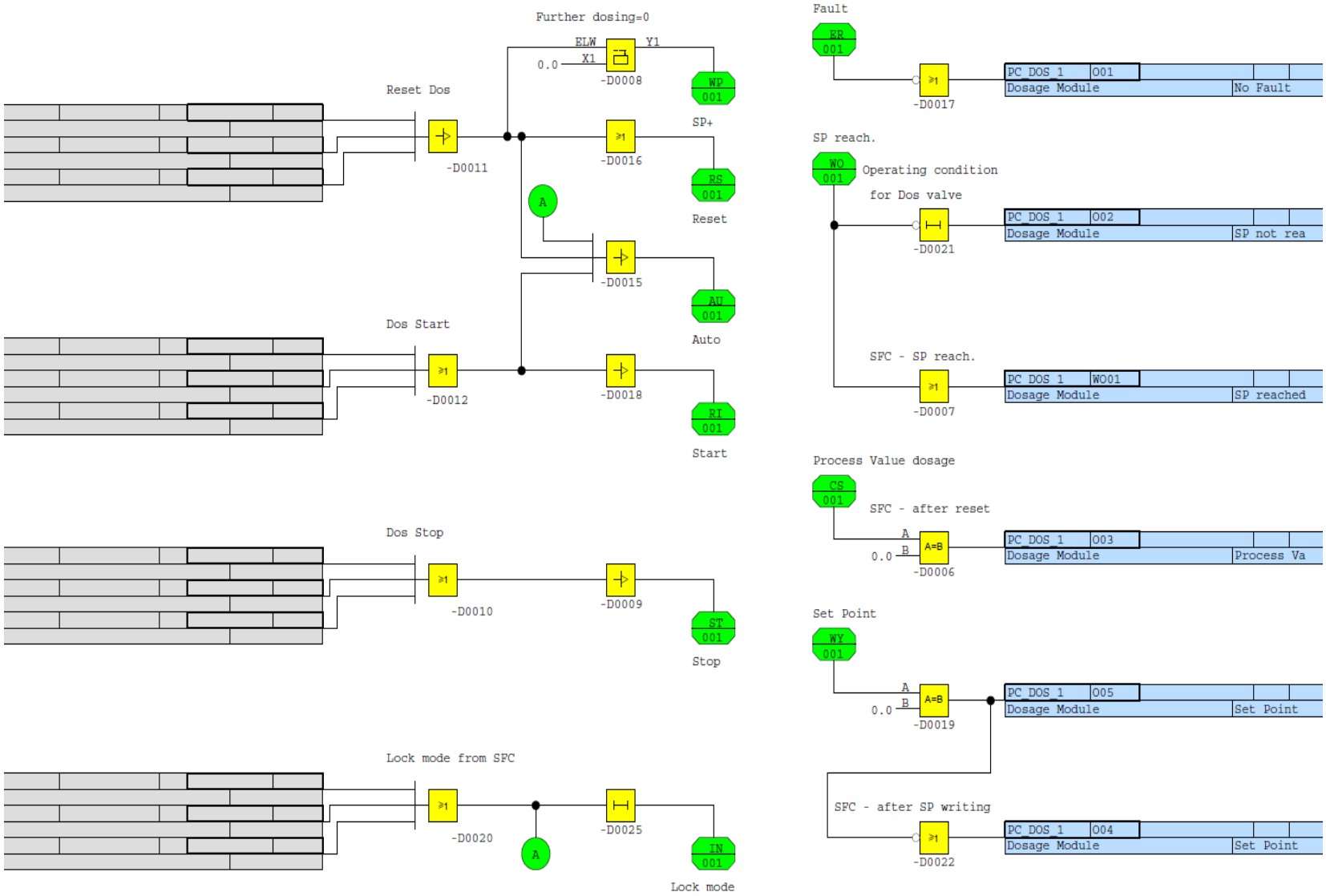

Figure 1.2 Function Template PC_DOS_1 (Page 2/3)

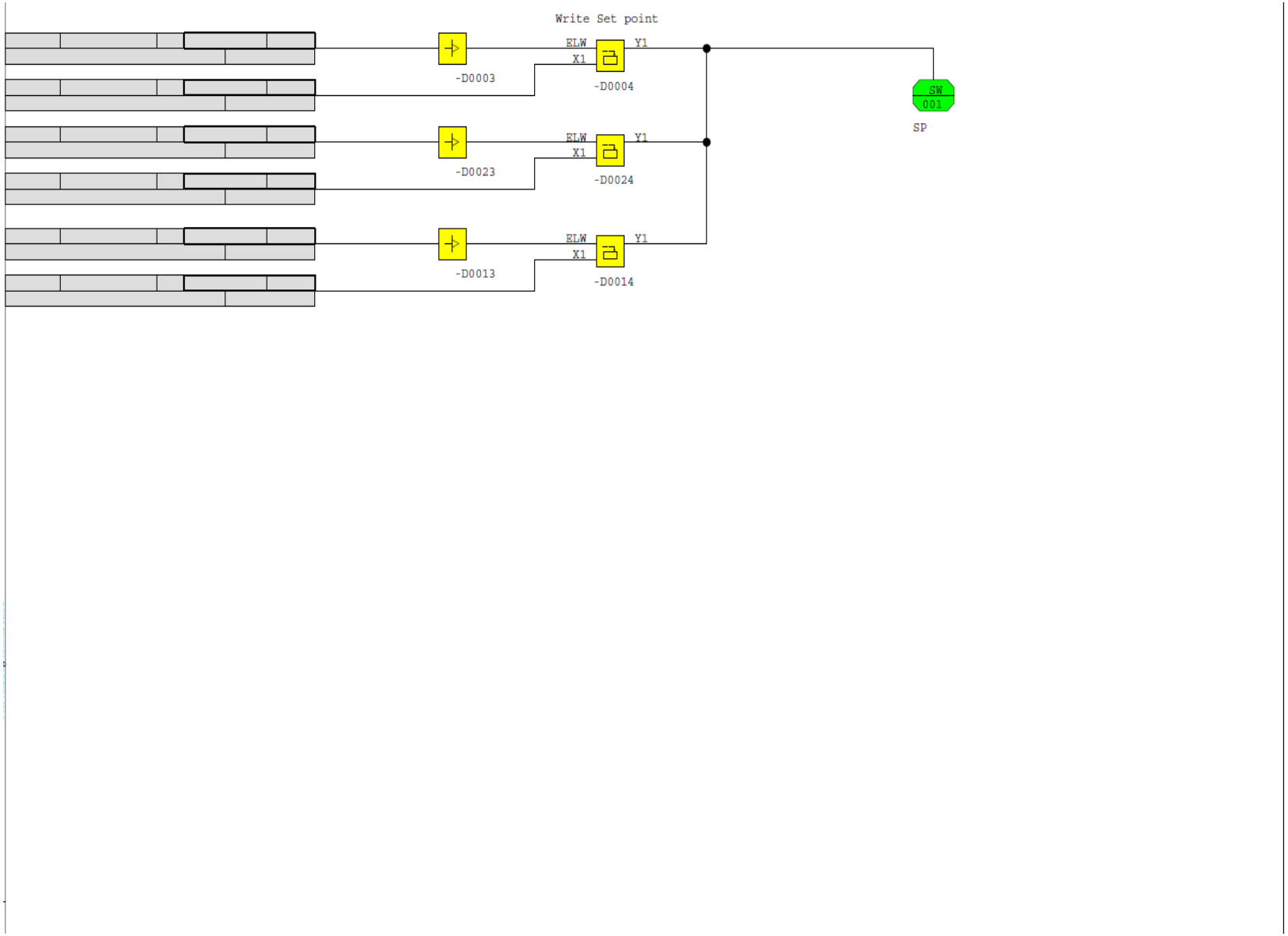

Figure 1.3 Function Template PC_DOS_1 (Page 3/3)

1.4 Configurable Parameters

The following parameters are in the function diagram template and can be engineered using Excel sheet data mechanisms.

In general function block parameters and signals can be exported to Excel sheet and can be engineered and imported.

1.4.1 Function Blocks

The visible and not connected parameters in the function diagram template are in **Bold**.

PC_DOS_1

Function Block	Input	Value	Data Type	Description
DELAY-00	RS1	0	Bool	Reset
DELAY-00	RS1	0	Bool	Reset
DELAY-00	RS2	0	Bool	Reset
DELAY-00	RS2	0	Bool	Reset
DELAY-00	T1	0:00:00.000	Duration	Delay in starting
DELAY-00	T1	0:00:02.000	Duration	Delay in starting
DELAY-00	T2	0:00:02.000	Duration	Drop delay
DELAY-00	T2	0:00:00.000	Duration	Drop delay
DOS-03	AUT	Connected	Bool	Automatic
DOS-03	**BSV**	**0.0**	**Real**	**Basic adjustment value**
DOS-03	**C1**	**0.0**	**real**	**Offset**
DOS-03	**CNTT**	**2**	**Integer**	**Counter type**
DOS-03	DTCS	0:00:00.000	Duration	Delay time counter stop
DOS-03	E00	0	Bool	Feedback 0, 2-nd valve
DOS-03	E01	0	Bool	Feedback 0, 1-nd valve
DOS-03	E10	0	Bool	Feedback 1, 2-nd valve
DOS-03	E11	0	Bool	Feedback 1, 1-st valve
DOS-03	HVFC	0.0	Real	H-limit flow/cycle
DOS-03	HVFQ	0.0	Real	H-limit frequency
DOS-03	I1	Connected	Bool	Input boolean
DOS-03	I2	0	Bool	Input boolean
DOS-03	I3	0	Bool	Input boolean
DOS-03	I4	0	Bool	Input boolean
DOS-03	ICT	0	Bool	Count input binary
DOS-03	INHI	Connected	Bool	Lock mode switchover

Function Block	Input	Value	Data Type	Description
DOS-03	**K1**	**0.416667**	**Real**	**Weighting factor**
DOS-03	LEKV	0.0	Real	Leakage value
DOS-03	**LKR**	**0**	**Bool**	**Interlock enable**
DOS-03	LKRS	Connected	Bool	Reset locking
DOS-03	**LKST**	**0**	**Bool**	**Stop locked**
DOS-03	**LVFC**	**0.0**	**Real**	**L-limit flow/cycle**
DOS-03	**MAN**	**0**	**Bool**	**Manual**
DOS-03	**MF**	**0**	**Integer**	**Flow monitoring on**
DOS-03	**MRE**	**10000.0**	**Real**	**Measuring range end**
DOS-03	**MRS**	**0.0**	**Real**	**Measuring range start**
DOS-03	MRV	0.0	Real	Maximum reset value
DOS-03	**OP**	**00000000**	**Packed Bool**	**Operation nom. Word**
DOS-03	**PARA**	**00000000**	**Packed Bool**	**Pbool**
DOS-03	PST	Connected	Bool	Protection stop
DOS-03	R	Connected	Bool	Enable
DOS-03	RS	Connected	Bool	Reset
DOS-03	**RTSO**	**0.0**	**Real**	**1st shutoffval.perc.of setp.**
DOS-03	**RW+**	**0**	**Bool**	**Release further dosing**
DOS-03	RX1	0.0	Real	Reference to 1st analog val.
DOS-03	RX2	0.0	Real	Reference 2nd analog value
DOS-03	RX3	0.0	Real	Reference to 3rd analog val.
DOS-03	RX4	0.0	Real	Reference to 4th analog val.
DOS-03	**SOV**	**0.0**	**Real**	**First shut-off value**
DOS-03	**SOV0**	**0.0**	**Real**	**Run-out quantity 2nd valve**
DOS-03	**SOVD**	**0**	**Bool**	**Sel. first shutoff value**
DOS-03	**SSOV**	**0**	**Bool**	**First shutoff value active**
DOS-03	STP	Connected	Bool	Stop
DOS-03	TEST	0	Bool	Test position
DOS-03	TFX1	0:00:00.000	Duration	Filter time first value
DOS-03	TLEK	0:00:00.000	Duration	Delay time leackage
DOS-03	TMS	0:00:02.000	Duration	Delay time H/L
DOS-03	W	Connected	Real	External set point
DOS-03	W+	Connected	Real	Further dosing qty.
DOS-03	X0V	0.0	Real	Second value
DOS-03	X1	0.0	Real	Input real

Function Block	Input	Value	Data Type	Description
DOS-03	X1V	0.0	Real	First value
DOS-03	X2	0.0	Real	Input real
DOS-03	X3	0.0	Real	Input real
DOS-03	X4	0.0	Real	Input real
DOS-03	XCT	Connected	Real	Counter analog
DOS-03	XCTF	0.0	Real	Counter frequency
DOS-03	XICT	0	Integer	Counter integer
DYNOR-00	T	0:00:01.000	Duration	Time value
DYNOR-00	T	0:00:01.000	Duration	Time value
DYNOR-00	T	0:00:01.000	Duration	Time value
DYNOR-00	T	0:00:01.000	Duration	Time value
DYNOR-00	T	0:00:01.000	Duration	Time value
DYNOR-00	T	0:00:01.000	Duration	Time value
DYNOR-00	T	0:00:01.000	Duration	Time value
EQ-R0	**B**	**0.0**	**Real**	**Input real**
EQ-R0	**B**	**0.0**	**Real**	**Input real**
LWR-R0	PARA	00000001	Packed Bool	PBool
LWR-R0	PARA	00000001	Packed Bool	PBool
LWR-R0	PARA	00000001	Packed Bool	PBool
LWR-R0	PARA	00000001	Packed bool	PBool
LWR-R0	**X1**	**0.0**	**Real**	**Input real**
SWTV1-R0	**X2**	**0.0**	**Real**	**Input real**

Table 1.3 Parameters of Function Block PC_DOS_1

1.4.2 Diagram Output References / Signal Parameters

PC_DOS_1

Signal	Data Type	Value High	Value Low	Alarm Template	Archive Template
CSY01	ANALOG	Process Va			Fast_7d
DRO01	BINARY	Release			
DSTO01	BINARY	Stop			
FULL01	BINARY	Coarse val	Coarse val		
O01	BINARY	No Fault			
O02	BINARY	SP not rea			
O03	BINARY	Process Va			

Signal	Data Type	Value High	Value Low	Alarm Template	Archive Template
O04	BINARY	Set Point			
O05	BINARY	Set Point			
O06	BINARY	Protection	Release		
OAUT01	BINARY	Automatic			
OCER01	BINARY	Fault			
OMAN01	BINARY	Manual			
PART01	BINARY	Fine valve	Fine valve		
QWY01	ANALOG	Rest dos q			
RTY01	ANALOG	SP to Act			
SOVO01	BINARY	Shutoff re			
STA01	PACKED	Status 1		VDO2	
STA02	PACKED	Status 2		VDO10	
W+Y01	ANALOG	Further do			
WO01	BINARY	SP reached			
WY01	ANALOG	Set Point			Fast_7d

Table 1.4 Signal Parameters of PC_DOS_1

1.5 Additional Information

- The substitute value strategy (LOW, HIGH or actual value (hold last valid value)) is defined in the quality tab from the input configuration of the connector “XCT”, “XICT“ or “XCTF” for the function block DOS-03.

1.6 Performance of the function in a fault scenario

No fault scenario is defined in this function diagram template.

2. Document References

Ref.	Document title	Document number
/1/	System 800xA PC Toolkit Library for Melody – Operation, User Manual	3BDA033439R5101EN
/2/	System 800xA PC Toolkit Library for Melody – Installation and Configuration, User Manual	3BDA033456R5103EN
/3/	S+ Engineering Function Blocks Operation	2VAA000580-530
/4/	S+ Engineering: Function Blocks Analog / Binary	2VAA000571-530
/5/	S+ Engineering: Function Blocks Binary	2VAA000572-530
/6/	S+ Engineering: Function Blocks Control	2VAA000573-530

Table 2.1 References

3BDA033930R5101EN_FD_PC_DOS_1 Germany Jul 2011

Copyright © 2011 by ABB. All Rights Reserved
® Registered Trademark of ABB.
™ Trademark of ABB.

BU Oil, Gas and Petrochemical
Frankfurt, Germany
www.abb.com/chemicals