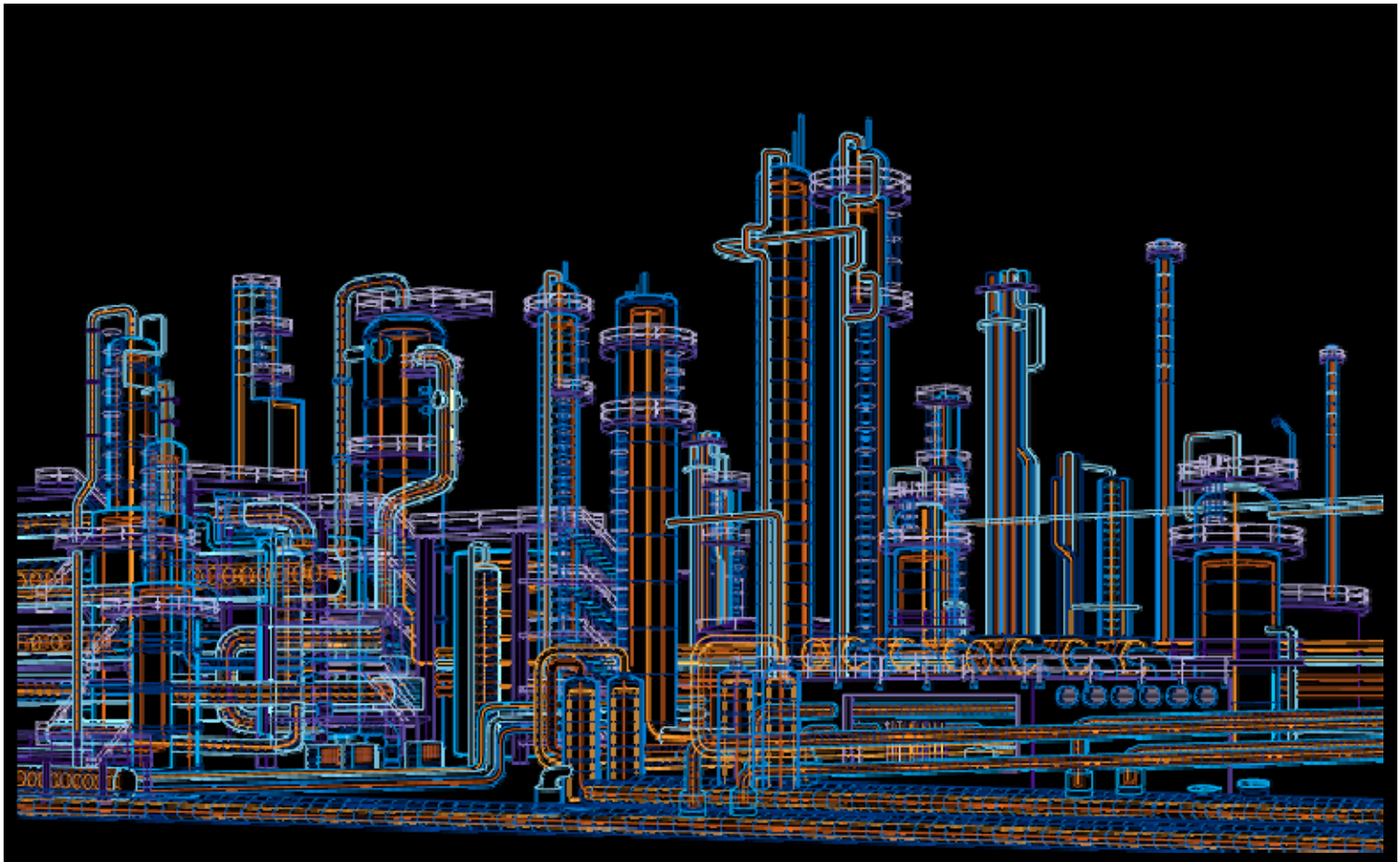

System 800xA
PC Toolkit Library for Melody
Function Diagram Template - PC_BI_2
User Manual

System Version 5.1

Power and productivity
for a better world™

Purpose

The purpose of this document is to describe the features and functionality of the function diagram template for a binary input. This document will define the ABB Control System standards for the implementation of the Toolkit specification to be adopted across all sites and on all plants.

Conditions

The System Extension supports System 800xA System Version 5.1 or higher.

Notice

This document contains information about one or more ABB products and may include a description of or a reference to one or more standards that may be generally relevant to the ABB products. The presence of any such description of a standard or reference to a standard is not a representation that all of the ABB products referenced in this document support all of the features of the described or referenced standard.

This document and parts thereof must not be reproduced or copied without written permission from ABB, and the contents thereof must not be imparted to a third party nor used for any unauthorized purpose.

Trademarks

All rights to copyrights, registered trademarks, and trademarks reside with their respective owners.

Copyright © 2011 by ABB.

All rights reserved.

Release: 2011-06-30

Document Number: 3BDA033930R5101EN_FD_PC_BI_2

Table of contents

1. Function 4
1.1 General Functional Description 4
1.2 Used Blocks 4
1.2.1 Function Blocks 4
1.2.2 Diagram Output References 5
1.2.3 I/O Modules 5
1.2.4 Diagram Input References 5
1.3 Function Template 6
1.4 Configurable Parameters 7
1.4.1 Function Blocks 7
1.4.2 IO Modules 8
1.4.3 Diagram Output References / Signal Parameters 8
1.5 Additional Information 8
1.6 Performance of the function module in a fault scenario 8
2. References 9

1. Function

1.1 General Functional Description

The function diagram template PC_BI_2 realizes the monitoring of a binary input signal in the process control system. Typically the input signal is provided from a binary contact or it may already be available as a digital signal.

When the function is in manual mode, the input can be set and reset by the operator.

The template covers the following main functionality:

- Display of the input signal from the binary contact.
- Supervision of the input signal for faults (e.g. short circuits, line break, board error, channel error…).
- In case of an error or fault condition, a substitute value may be used. Three substitute value strategies are available:
  1. The input value is written to the output value, no default value handling.
  2. The last valid value at the input is written to the output and retained.
  3. The output value is set to a substitute value.
- En-/Disabling alarms via logic.
- Inhibiting limit supervision output for further processing via logic.

1.2 Used Blocks

1.2.1 Function Blocks

Function Block	Name	Library	Description
BMEM-00	PC_BI_2	O&M	Melody OPA-Binary Memory Function Block description see /3/ Operation description see /1/
MSU-00	PC_BI_2	Binary	Message suppression Boolean
IVDEC-B0	PC_BI_2	Analog/Binary	Invalid decoder Boolean
OR-B0	PC_BI_2	Binary	OR Boolean
SWTV1-B0	PC_BI_2	Analog/Binary	Changeover switch Boolean
BMEM-02	PC_BI_2	Binary	Digital Memory Boolean
Page Connector	PC_BI_2	Connectors	Page connector

Table 1.1 Function Blocks

1.2.2 Diagram Output References

Signal	Data Type	Description
O01	BINARY	Binary Input Module sim
O02	BINARY	Binary Input Module sim
O03	BINARY	Binary Input Module sim
STA01	PACKED	Binary Input Module sim

Table 1.2 Diagram Output References

1.2.3 I/O Modules

Function Block	Name	Library	Description
NAMUREX-00	PC_BI_2	I/O	HW-In digital Ex (CBI21Ex) proximity NAMUR

Table 1.3 I/O Modules

1.2.4 Diagram Input References

No diagram input references used in this function diagram template.

1.3 Function Template

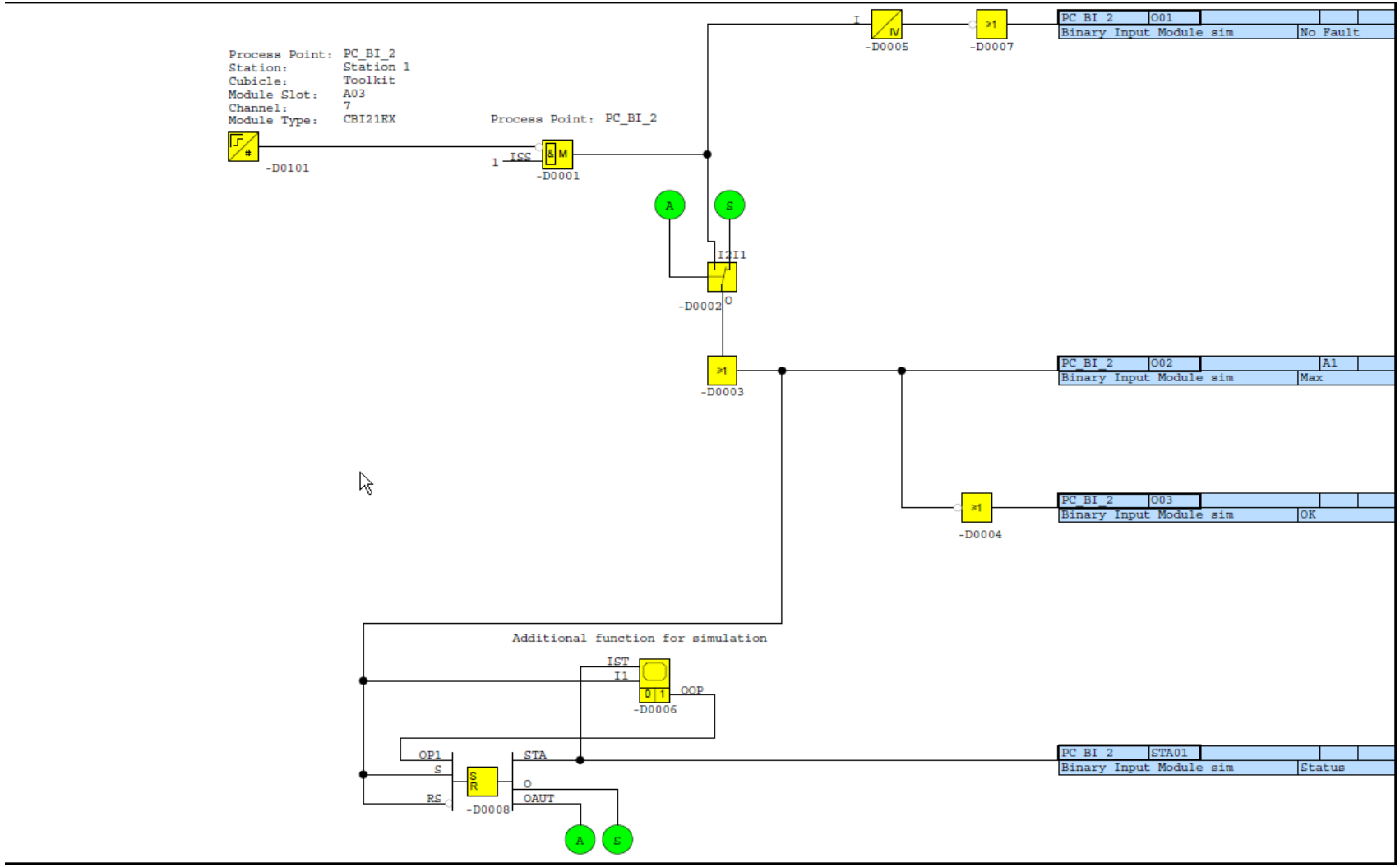

Figure 1.1 Function Template PC_BI_2

1.4 Configurable Parameters

The following parameters are in the function diagram template and can be engineered using Excel sheet data mechanisms.

In general function block parameters and signals can be exported to Excel sheet and can be engineered and imported.

1.4.1 Function Blocks

The visible and not connected parameters in the function diagram template are in **Bold**.

PC_BI_2

Function Block	Input	Value	Data Type	Description
BMEM-00	CR1	00000000	Packed Bool	Criteria telegram 1
BMEM-00	CR2	00000000	Packed Bool	Criteria telegram 2
BMEM-00	CR3	00000000	Packed Bool	Criteria telegram 3
BMEM-00	I1	Connected	Bool	Input boolean
BMEM-00	I2	0	Bool	Input boolean
BMEM-00	I3	0	Bool	Input boolean
BMEM-00	I4	0	Bool	Input boolean
BMEM-02	AUT	0	Bool	Automatic
BMEM-02	CSB	0	Bool	Behaviour at cold start
BMEM-02	CSV	0	Bool	Value for O after volt.fail.
BMEM-02	INHI	0	Bool	Lock mode switchover
BMEM-02	MAN	0	Bool	Manual
BMEM-02	MMA	0	Bool	Modes MAN/AUT off
BMEM-02	OPEX	00000000	Packed Bool	Boolean logic extern.
BMEM-02	PRSR	0	Bool	Set/reset priority
BMEM-02	R0	1	Bool	Release 0
BMEM-02	R1	1	Bool	Release 1
BMEM-02	RDK1	0	Bool	Release desk
BMEM-02	ROP1	1	Bool	Release operation
BMEM-02	ROPA	0	Bool	Release operation in auto
BMEM-02	RSD	0	Bool	Reset dynamic
BMEM-02	SD	0	Bool	Set dynamic
MSU-00	**ISS**	**1**	**Bool**	**Message suppression**

Table 1.4 Parameters of Function Block PC_BI_2

1.4.2 IO Modules

PC_BI_2

Function Block	Input	Value	Data type	Description
NAMUREX-00	EBMO	1	Integer	Line break monitoring

Table 1.5 Parameters of IO Module PC_BI_2

1.4.3 Diagram Output References / Signal Parameters

PC_BI_2

Signal	Data Type	Value High	Value Low	Alarm Template	Archive Template
O01	BINARY	No Fault	Fault		
O02	BINARY	Max	OK	A1	
O03	BINARY	OK	Max		
STA01	PACKED	Status			

Table 1.6 Signal Parameters of PC_BI_1

1.5 Additional Information

- The substitute value strategy (LOW, HIGH or actual value (hold last valid value)) is defined in the quality tab from the input configuration of the connector “I” for the function block MSU-00.
- The signal quality (Negate/inverted) is defined in the quality tab from the input configuration of the connector “I” for the function block MSU-00.

1.6 Performance of the function module in a fault scenario

In a fault scenario the module will generate an alarm/event and the function diagram output reference “O01” will be set to true.

2. Document References

Ref.	Document title	Document number
/1/	System 800xA PC Toolkit Library for Melody – Operation, User Manual	3BDA033439R5101EN
/2/	System 800xA PC Toolkit Library for Melody – Installation and Configuration, User Manual	3BDA033456R5103EN
/3/	S+ Engineering Function Blocks Operation	2VAA000580-530
/4/	S+ Control – Melody – Binary Input	2VAA000595-100
/5/	S+ Engineering: Function Blocks Analog / Binary	2VAA000571-530
/6/	S+ Engineering: Function Blocks Binary	2VAA000572-530

Table 2.1 References

3BDA033930R5101EN_FD_PC_BI_2 Germany Jul 2011

Copyright © 2011 by ABB. All Rights Reserved
® Registered Trademark of ABB.
™ Trademark of ABB.

BU Oil, Gas and Petrochemical
Frankfurt, Germany
www.abb.com/chemicals