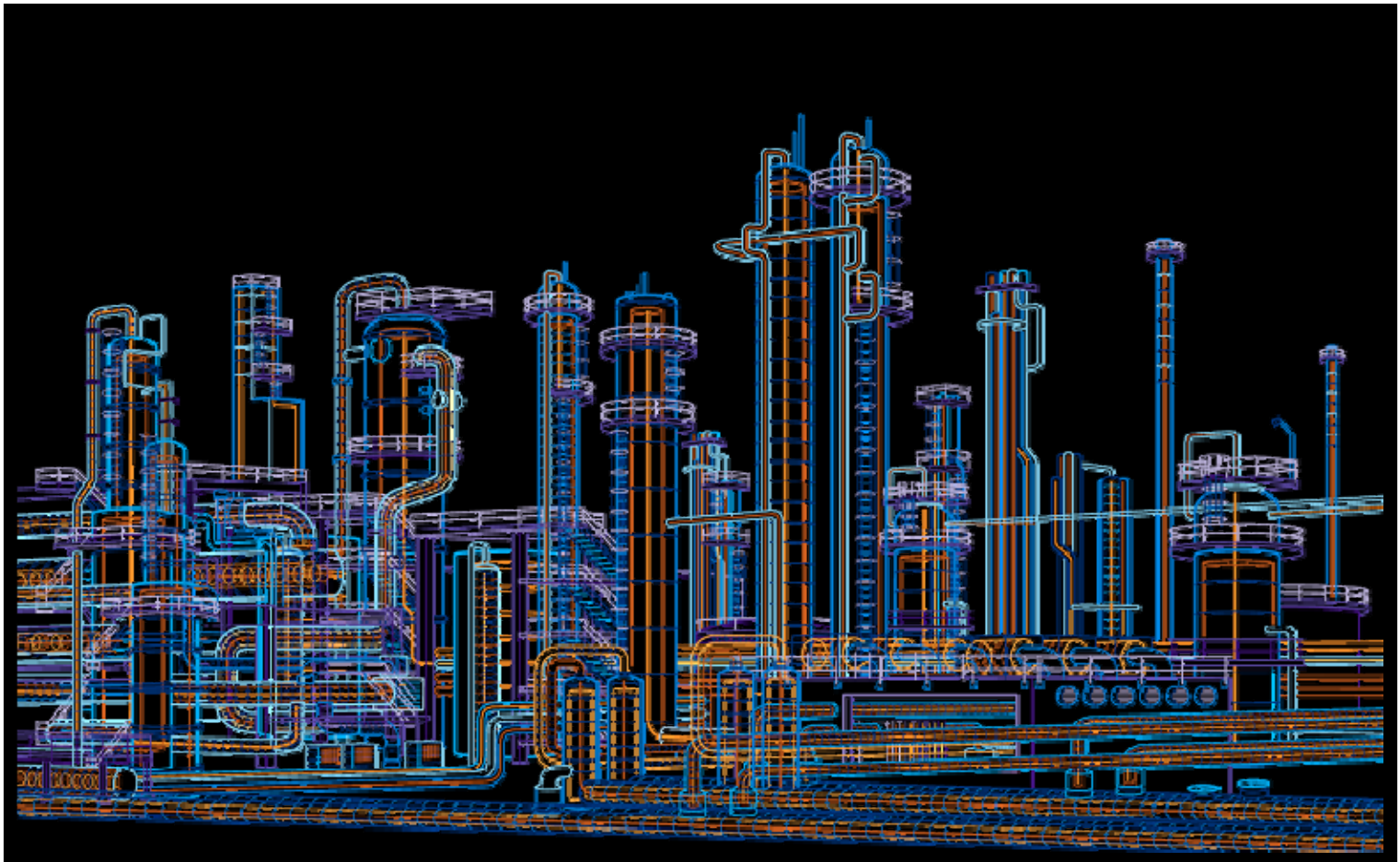

# System 800xA
# PC Toolkit Library for Melody
# Function Diagram Template - PC_CNT_4
# User Manual

System Version 5.1

Power and productivity
for a better world™

## Purpose

The purpose of this document is to describe the features and functionality of the function diagram template for totalizer. This document will define the ABB Control System standards for the implementation of the Toolkit specification to be adopted across all sites and on all plants.

## Conditions

The System Extension supports System 800xA System Version 5.1 or higher.

## Notice

This document contains information about one or more ABB products and may include a description of or a reference to one or more standards that may be generally relevant to the ABB products. The presence of any such description of a standard or reference to a standard is not a representation that all of the ABB products referenced in this document support all of the features of the described or referenced standard.

This document and parts thereof must not be reproduced or copied without written permission from ABB, and the contents thereof must not be imparted to a third party nor used for any unauthorized purpose.

## Trademarks

All rights to copyrights, registered trademarks, and trademarks reside with their respective owners.

Copyright © 2011 by ABB.

All rights reserved.

Release: 2011-06-30

Document Number: 3BDA033930R5101EN_FD_PC_CNT_4

# Table of contents

**1. Function ..... 4**
1.1 General Functional Description ..... 4
1.2 Used Blocks ..... 4
1.2.1 Function Blocks ..... 4
1.2.2 Diagram Output References ..... 4
1.2.3 I/O Modules ..... 5
1.2.4 Diagram Input References ..... 5
1.3 Function Template ..... 6
1.4 Configurable Parameters ..... 7
1.4.1 Function Blocks ..... 7
1.4.2 Diagram Output References / Signal Parameters ..... 8
1.5 Additional Information ..... 8
**2. Document References ..... 9**

# 1. Function

## 1.1 General Functional Description

The function diagram template PC_CNT_4 implements a counter device for pulse input values endless in the control system. The template provides the following functions:

- Display of the current counter value (QY/PVi) and the counter value during the last counter reset (QOY/PV)
- Resetting of the counter through a higher-level control (event-driven or cyclically)
- Standard counting function
- Supervision of the signal against a two high limits (Limit H and Limit HH). Whenever a limit is violated, an alarm/event is generated (depending on the alarm/event configuration)
- En-/Disabling alarms via logic
- Inhibiting limit supervision output for further processing via logic
- Entering of an alternative input value via faceplate

## 1.2 Used Blocks

### 1.2.1 Function Blocks

| Function Block | Name | Library | Description |
|---|---|---|---|
| BINTOT-00 | PC_CNT_4 | Analog/Binary | Totalized value digital Boolean<br>Function Block description see /4/<br>Operation description see /1/ |
| DYNOR-00 | PC_CNT_4 | Binary | OR dynamic Boolean |
| DELAY-00 | PC_CNT_4 | Binary | Delay Boolean |
| OR-B0 | PC_CNT_4 | Binary | OR Boolean |
| LEEQ-R0 | PC_CNT_4 | Analog/Binary | Analog comparator A<=B Real |

*Table 1.1 Function Blocks*

### 1.2.2 Diagram Output References

| Signal | Data Type | Description |
|---|---|---|
| O01 | BINARY | Pulse Input endless |
| QOY01 | ANALOG | Pulse Input endless |
| QY01 | ANALOG | Pulse Input endless |
| STA01 | PACKED | Pulse Input endless |

*Table 1.2 Function Diagram Output References*

### 1.2.3 I/O Modules

No I/O modules used in this function diagram template.

### 1.2.4 Diagram Input References

The diagram input references are not connected in this function diagram template.

## 1.3 Function Template

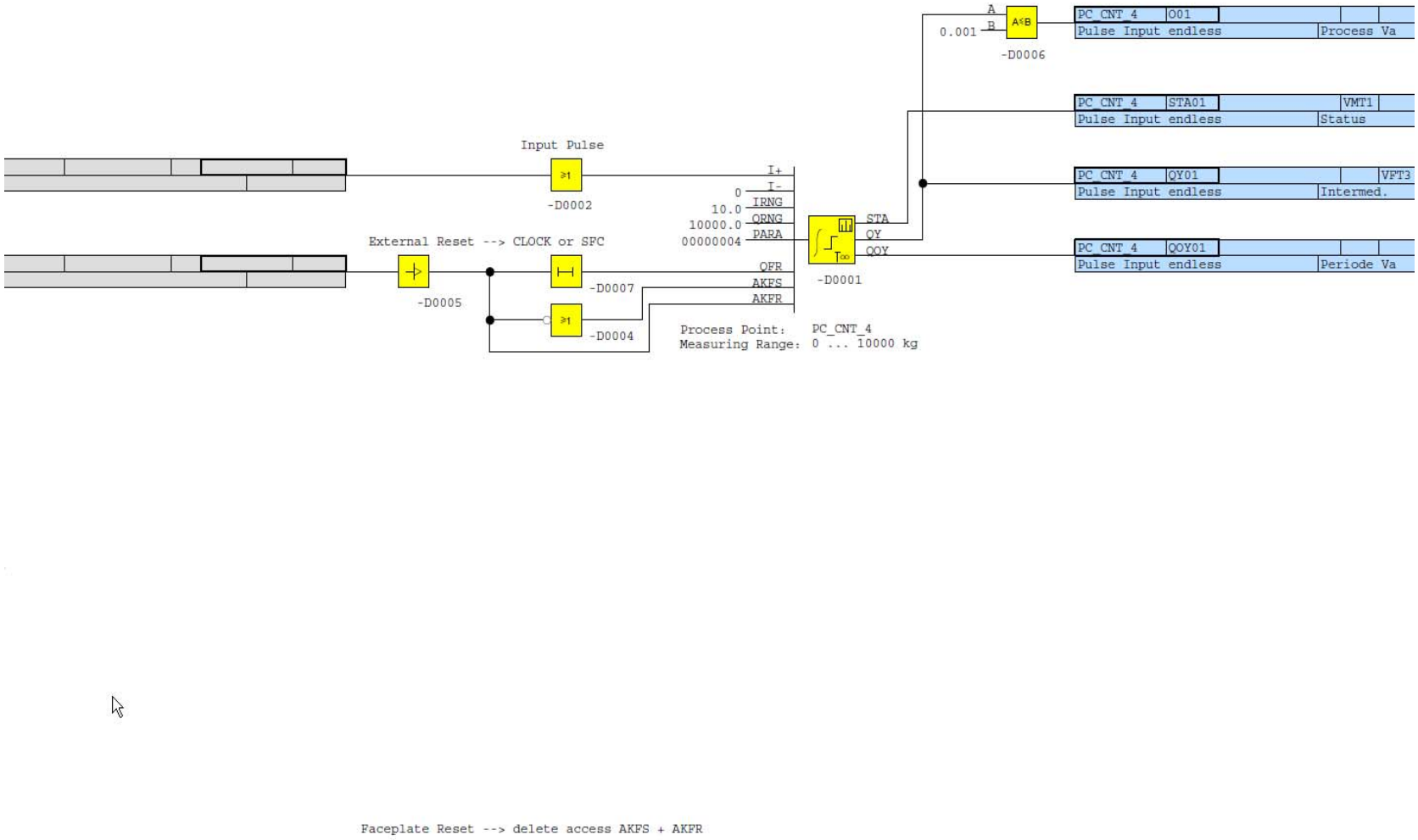


*Figure 1.1 Function Template PC_CNT_4*

## 1.4 Configurable Parameters

The following parameters are in the function diagram template and can be engineered using Excel sheet data mechanisms.

In general function block parameters and signals can be exported to Excel sheet and can be engineered and imported.

### 1.4.1 Function Blocks

The visible and not connected parameters in the function diagram template are in **Bold**.

#### PC_CNT_4

| Function Block | Input | Value | Data Type | Description |
|---|---|---|---|---|
| BINTOT-00 | AHB | 0.0 | Real | H-limit hysteresis |
| BINTOT-00 | AHD | 0 | Bool | Disable H-limit |
| BINTOT-00 | AHHB | 0.0 | Real | HH-limit hysteresis |
| BINTOT-00 | AHHD | 0 | Bool | Disable HH-limit |
| BINTOT-00 | AHHS | 0 | Real | HH-limit message suppr. |
| BINTOT-00 | AHHV | 1.05 | Real | HH-limit value |
| BINTOT-00 | AHS | 0 | Real | H-limit message suppr. |
| BINTOT-00 | AHV | 1.0 | Real | H-limit value |
| BINTOT-00 | AKFR | Connected | Bool | Reset access lock |
| BINTOT-00 | AKFS | Connected | Bool | Set access lock |
| BINTOT-00 | ATV | 0.0 | Real | Alternative value |
| BINTOT-00 | FI1 | 1 | Bool | Backup input boolean |
| BINTOT-00 | FIP1 | 00000000 | Packed Bool | Backup input PBool |
| BINTOT-00 | FX1 | 0.0 | Real | Backup input real |
| BINTOT-00 | I+ | Connected | Bool | Pulse input increment |
| BINTOT-00 | **I-** | **0** | **Bool** | **Pulse input decrement** |
| BINTOT-00 | **IRNG** | **10.0** | **Real** | **Value range input I** |
| BINTOT-00 | MDO | 00000000 | Packed Bool | Oper. word operation |
| BINTOT-00 | **PARA** | **00000004** | **Packed Bool** | **PBool** |
| BINTOT-00 | QFR | Connected | Bool | Reset Quatity value |
| BINTOT-00 | **QRNG** | **10000.0** | **Real** | **Quantity value value range** |
| DELAY-00 | RS1 | 0 | Bool | Reset |
| DELAY-00 | RS2 | 0 | Bool | Reset |
| DELAY-00 | T1 | 0:00:01.000 | Duration | Delay in starting |
| DELAY-00 | T2 | 0:00:00.000 | Duration | Drop delay |

| Function Block | Input | Value | Data Type | Description |
|---|---|---|---|---|
| DYNOR-00 | T | 0:00:02.000 | Duration | Time value |
| LEEQ-R0 | **B** | **0.001** | **Real** | **Input real** |

*Table 1.3 Parameters of Function Block PC_CNT_4*

### 1.4.2 Diagram Output References / Signal Parameters

#### PC_CNT_4

| Signal | Data Type | Value High | Value Low | Alarm Template | Archive Template |
|---|---|---|---|---|---|
| O01 | BINARY | Process Va | | | |
| QOY01 | ANALOG | Periode Va | | | |
| QY01 | ANALOG | Intermed. | | | Fast_7d |
| STA01 | PACKED | Status | | VMT1 | |

*Table 1.4 Signal Parameters of PC_CNT_4*

## 1.5 Additional Information

- The substitute value strategy is realized in the function block using the input “MDO” (Set/Reset alternative value or substitute value reset).
- In addition to them an alternative value can be activated independent from the invalidity status of the function.
- In the input configuration of “I+” and in the tab quality a substitute value (actual value, LOW or HIGH) can be defined.

# 2. Document References

| Ref. | Document title | Document number |
|---|---|---|
| /1/ | System 800xA PC Toolkit Library for Melody – Operation, User Manual | 3BDA033439R5101EN |
| /2/ | System 800xA PC Toolkit Library for Melody – Installation and Configuration, User Manual | 3BDA033456R5103EN |
| /3/ | S+ Engineering Function Blocks Operation | 2VAA000580-530 |
| /4/ | S+ Engineering: Function Blocks Analog / Binary | 2VAA000571-530 |
| /5/ | S+ Engineering: Function Blocks Binary | 2VAA000572-530 |

*Table 2.1 References*

3BDA033930R5101EN_FD_PC_CNT_4 Germany Jul 2011

Copyright © 2011 by ABB. All Rights Reserved
® Registered Trademark of ABB.
™ Trademark of ABB.

BU Oil, Gas and Petrochemical
Frankfurt, Germany
www.abb.com/chemicals