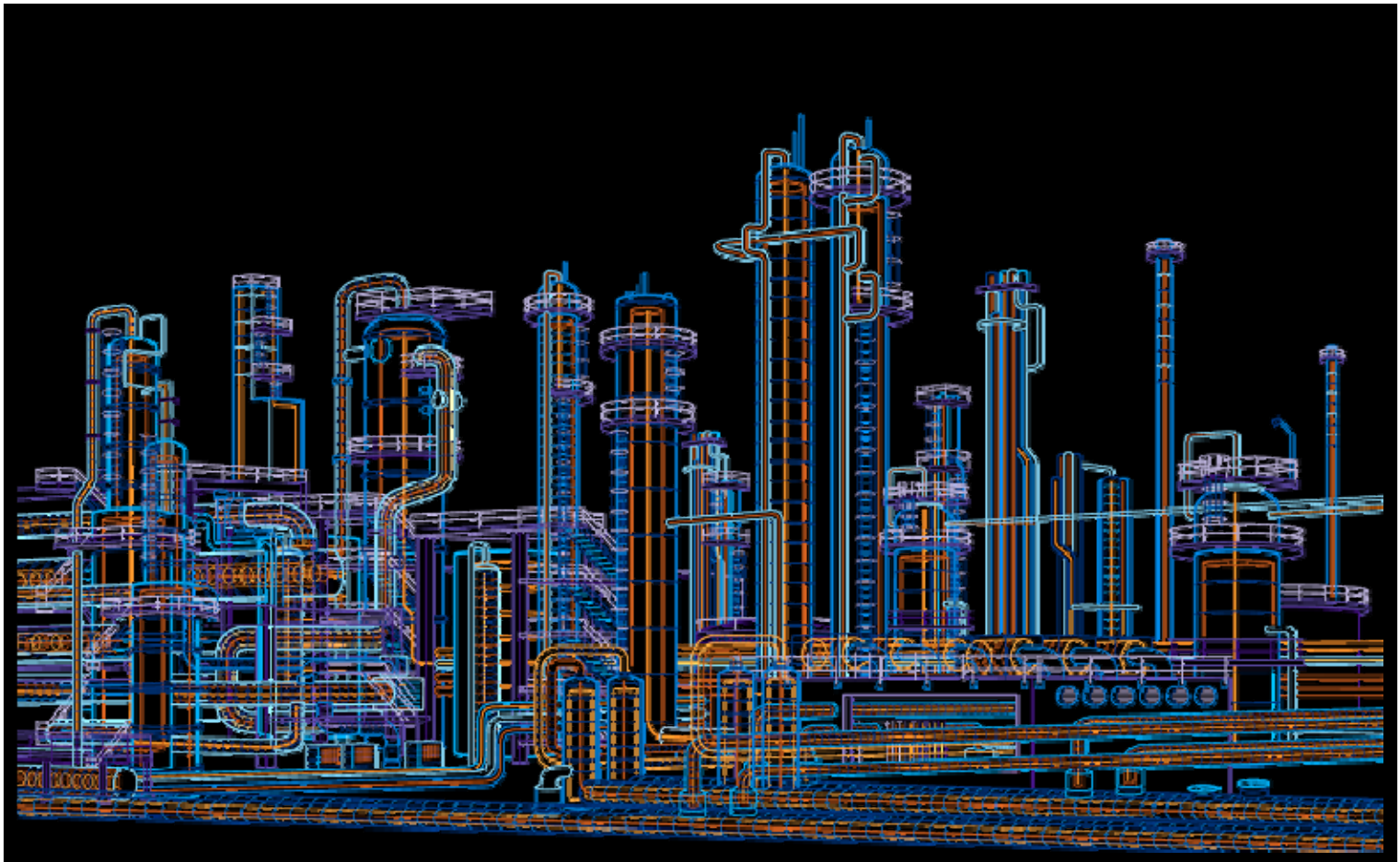

System 800xA
PC Toolkit Library for Melody
Function Diagram Template - PC_SFC_1
User Manual

System Version 5.1

Power and productivity
for a better world™

Purpose

The purpose of this document is to describe the features and functionality of the function diagram template for a two direction sequential functional chart. This document will define the ABB Control System standards for the implementation of the Toolkit specification to be adopted across all sites and on all plants.

Conditions

The System Extension supports System 800xA System Version 5.1 or higher.

Notice

This document contains information about one or more ABB products and may include a description of or a reference to one or more standards that may be generally relevant to the ABB products. The presence of any such description of a standard or reference to a standard is not a representation that all of the ABB products referenced in this document support all of the features of the described or referenced standard.

This document and parts thereof must not be reproduced or copied without written permission from ABB, and the contents thereof must not be imparted to a third party nor used for any unauthorized purpose.

Trademarks

All rights to copyrights, registered trademarks, and trademarks reside with their respective owners.

Copyright © 2011 by ABB.

All rights reserved.

Release: 2011-06-30

Document Number: 3BDA033930R5101EN_FD_PC_SFC_1

Table of contents

1. Function 4
1.1 General Functional Description 4
1.2 Used Blocks 4
1.2.1 Function Blocks 4
1.2.2 Diagram Output References 5
1.2.3 I/O Modules 5
1.2.4 Diagram Input References 5
1.3 Function Template 6
1.4 Configurable Parameters 10
1.4.1 Function Blocks 10
1.4.2 Diagram Output References / Signal parameters 13
1.5 Additional Information 14
1.6 Performance of the function module in a fault scenario 14
2. Document References 15

1. Function

1.1 General Functional Description

The function diagram template PC_SFC_1 realizes a two direction sequential functional chart in the process control system.

The two direction sequence chain is available for the control of start-up and shutdown procedure for continuous or intermittent processes.

The two direction sequence chain contains the following functionality:

- User interface
- Operator modes
- Manual, Automatic and Priority commands
- Interlocks
- Priority command alarms
- Stable End-positions with monitoring
- Runtime monitoring per SFC step (Step max time)
- Min Time per SFC step
- Directly change-over from start-up (On sequence) to shutdown (Off sequence) and vice versa

1.2 Used Blocks

1.2.1 Function Blocks

Function Block	Name	Library	Description
SC2-01	PC_SFC_1		Sequence control double branch Extended Function Block description see /5/ Operation description see /1/
SFC-01	PC_SFC_1	O&M	Operation intervention OL-control sequence control
AND-B0	PC_SFC_1	Binary	AND Boolean
OR-B0	PC_SFC_1	Binary	OR Boolean
DYNOR-00	PC_SFC_1	Binary	OR dynamic Boolean
DELAY-00	PC_SFC_1	Binary	Delay Boolean
CONPSRC	PC_SFC_1	Connectors	Connector source
CONPSNK	PC_SFC_1	Connectors	Connector sink

Table 1.1 Function Blocks

1.2.2 Diagram Output References

Signal	Data Type	Description
O01	BINARY	SFC 2-Branch
OAUT01	BINARY	SFC 2-Branch
OMAN01	BINARY	SFC 2-Branch
OOFR01	BINARY	SFC 2-Branch
OOFS01	BINARY	SFC 2-Branch
OONR01	BINARY	SFC 2-Branch
OONS01	BINARY	SFC 2-Branch
OSTP01	BINARY	SFC 2-Branch
S005	BINARY	SFC 2-Branch
S010	BINARY	SFC 2-Branch
S015	BINARY	SFC 2-Branch
S020	BINARY	SFC 2-Branch
S030	BINARY	SFC 2-Branch
S040	BINARY	SFC 2-Branch
S045	BINARY	SFC 2-Branch
S050	BINARY	SFC 2-Branch
S060	BINARY	SFC 2-Branch
S070	BINARY	SFC 2-Branch
S080	BINARY	SFC 2-Branch
S900	BINARY	SFC 2-Branch
S910	BINARY	SFC 2-Branch
STA01	PACKED	SFC 2-Branch
TEND01	BINARY	SFC 2-Branch
THLD01	BINARY	SFC 2-Branch
TSTP01	BINARY	SFC 2-Branch

Table 1.2 Function Diagram Output References

1.2.3 I/O Modules

No IO modules used in this function diagram template.

1.2.4 Diagram Input References

The diagram input references are not connected in this function diagram template.

1.3 Function Template

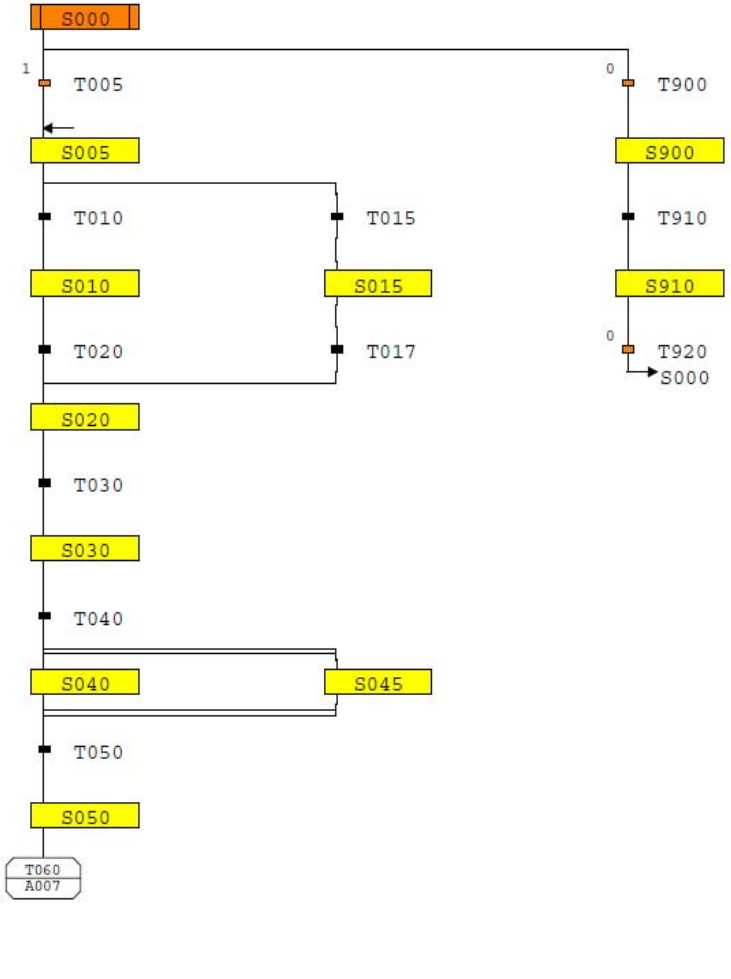

Figure 1.1 Function Template PC_SFC_1 (Page 1/4)

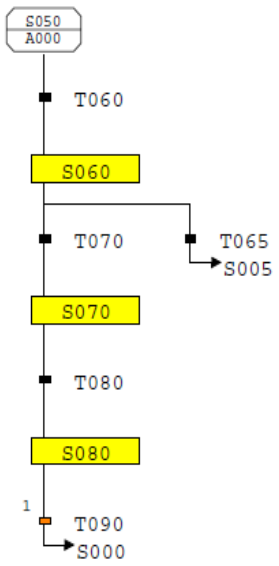

Figure 1.2 Function Template PC_SFC_1 (Page 2/4)

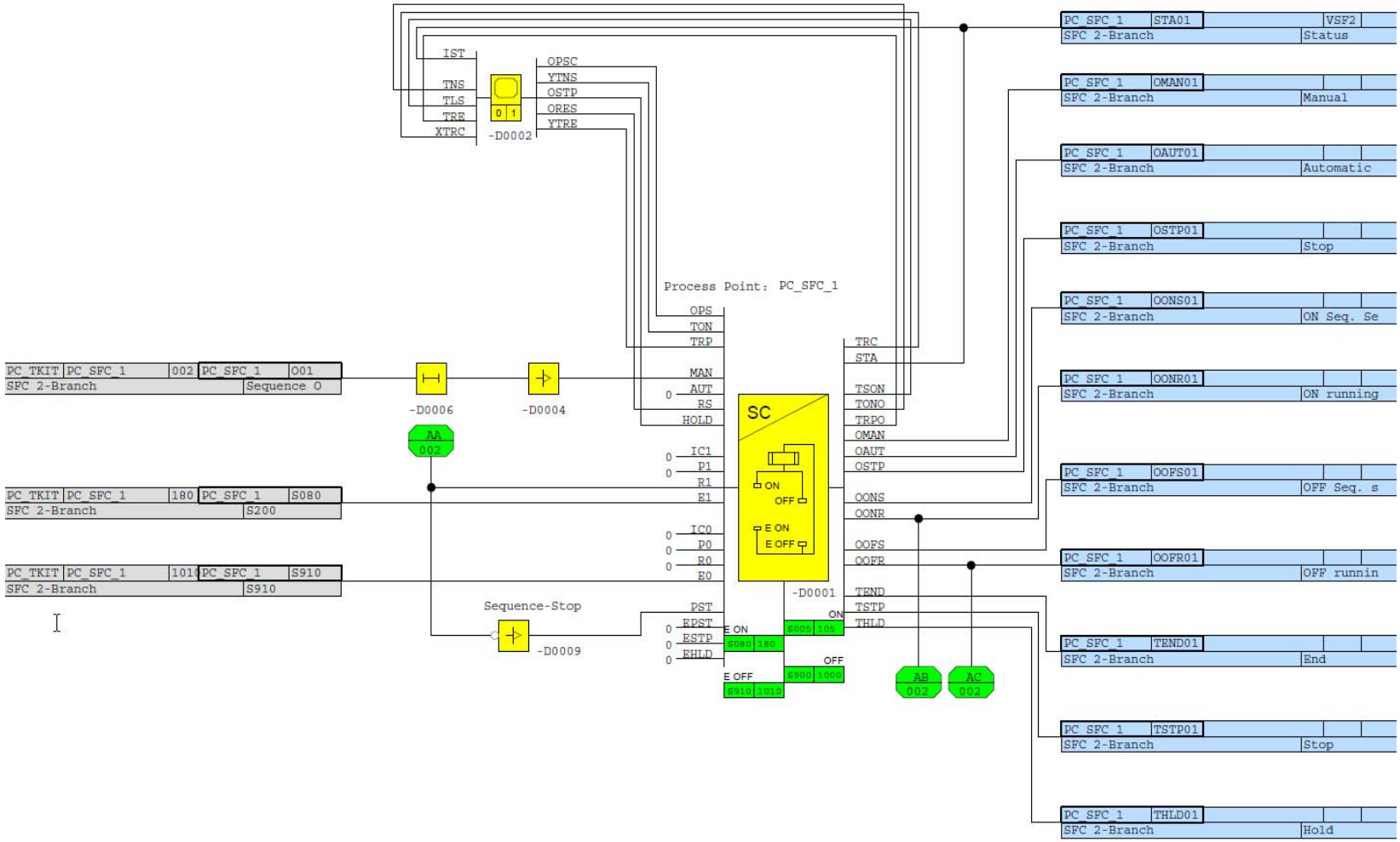

Figure 1.3 Function Template PC_SFC_1 (Page 3/4)

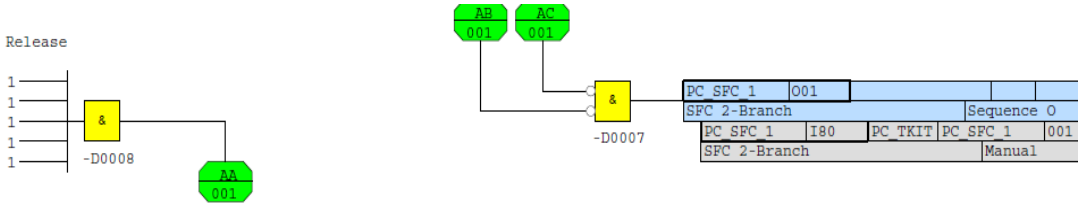

Figure 1.4 Function Template PC_SFC_1 (Page 4/4)

1.4 Configurable Parameters

The following parameters are in the function diagram template and can be engineered using Excel sheet data mechanisms.

In general the function block parameters and signals can be exported to Excel sheet and can be engineered and imported.

1.4.1 Function Blocks

The visible and not connected parameters in the function diagram template are in **Bold**.

PC_SFC_1

Function Block	Input	Value	Data Type	Description
AND-B0	I1	1	Bool	Input boolean
AND-B0	I2	1	Bool	Input boolean
AND-B0	I3	1	Bool	Input boolean
AND-B0	I4	1	Bool	Input boolean
AND-B0	I5	1	Bool	Input boolean
DELAY-00	RS1	0	Bool	Reset
DELAY-00	RS2	0	Bool	Reset
DELAY-00	T1	0:00:06.000	Duration	Delay in starting
DELAY-00	T2	0:00:00.000	Duration	Drop delay
DYNOR-00	T	0:00:02.000	Duration	Time value
DYNOR-00	T	0:00:02.000	Duration	Time value
SC2-01	**AUT**	**0**	**Bool**	**Automatic**
SC2-01	CLCK	0	Bool	Activate time function
SC2-01	E0	Connected	Bool	Feedback 0
SC2-01	E1	Connected	Bool	Feedback 1
SC2-01	EFRS	0	Bool	Reset end position error
SC2-01	**EHLD**	**0**	**Bool**	**Hold branch end**
SC2-01	**EPST**	**0**	**Bool**	**Protection stop branch end**
SC2-01	**ESTP**	**0**	**Bool**	**Stop branch end**
SC2-01	HOLD	Connected	Bool	Stop low priority
SC2-01	**IC0**	**0**	**Bool**	**Control 0**
SC2-01	**IC1**	**0**	**Bool**	**Control 1**
SC2-01	INHI	0	Bool	Lock mode switchover
SC2-01	MAN	Connected	Bool	Manual
SC2-01	OPN	00000020	Packed Bool	Operation locked

Function Block	Input	Value	Data Type	Description
SC2-01	OPS	Connected	OPSC	Operation sequence control
SC2-01	**P0**	**0**	**Bool**	**Protection 0**
SC2-01	**P1**	**0**	**Bool**	**Protection 1**
SC2-01	PARA	00000600	Packed Bool	PBool
SC2-01	PST	Connected	Bool	Protection Stop
SC2-01	**R0**	**0**	**Bool**	**Release 0**
SC2-01	R1	Connected	Bool	Release 1
SC2-01	REND	0	Bool	Restart in end branch
SC2-01	RFRS	0	Bool	Runtime error reset
SC2-01	RHLD	0	Bool	Restart in hold branch
SC2-01	RS	Connected	Bool	Reset
SC2-01	RSTP	0	Bool	Restart in stop branch
SC2-01	T1RS	0:00:05	Duration	Reset delay in endpos.
SC2-01	TON	Connected	Clock	New start time
SC2-01	TRP	Connected	Long Duration	Repeat time
SFC-01	I1	0	Bool	Input boolean
SFC-01	I2	0	Bool	Input boolean
SFC-01	I3	0	Bool	Input boolean
SFC-01	I4	0	Bool	Input boolean
SFC-01	IST	Connected	Packed Bool	Status
SFC-01	TLS	Connected	Clock	Last start time
SFC-01	TNS	Connected	Clock	New start time
SFC-01	TRE	Connected	Long Duration	Repeat time
SFC-01	XTRC	Connected	Long Duration	Runtime
STEP-00	STT	ON Seq Start	ST20	Step text
STEP-00	STT	Initial state	ST20	Step text
STEP-00	STT	Alternativ	ST20	Step text
STEP-00	STT	Pump ON	ST20	Step text
STEP-00	STT	Pump running	ST20	Step text
STEP-00	STT	Request level	ST20	Step text
STEP-00	STT	Parallel	ST20	Step text
STEP-00	STT	Dos. SP \ Reset	ST20	Step text

Function Block	Input	Value	Data Type	Description
STEP-00	STT	Temperature checking	ST20	Step text
STEP-00	STT	END	ST20	Step text
STEP-00	STT	ON Seq End	ST20	Step text
STEP-00	STT	OFF Seq Start	ST20	Step text
STEP-00	STT	OFF Seq End	ST20	Step text
STEP-00	TMO	0:00:20	Long Duration	Monitoring time step
STEP-00	TMO	0:01:00	Long Duration	Monitoring time step
STEP-00	TMO	0:00:20	Long Duration	Monitoring time step
STEP-00	TMO	0:01:00	Long Duration	Monitoring time step
STEP-00	TMO	0:01:00	Long Duration	Monitoring time step
STEP-00	TMO	0:01:00	Long Duration	Monitoring time step
STEP-00	TMO	0:00:20	Long Duration	Monitoring time step
STEP-00	TMO	0:01:00	Long Duration	Monitoring time step
STEP-00	TMO	0:01:00	Long Duration	Monitoring time step
STEP-00	TMO	0:01:00	Long Duration	Monitoring time step
STEP-00	TMO	0:01:00	Long Duration	Monitoring time step
STEP-00	TMO	0:01:00	Long Duration	Monitoring time step
STEP-00	TWA	0:00:02	Long Duration	Waiting time step
STEP-00	TWA	0:00:02	Long Duration	Waiting time step
STEP-00	TWA	0:00:02	Long Duration	Waiting time step
STEP-00	TWA	0:00:02	Long Duration	Waiting time step
STEP-00	TWA	0:00:02	Long Duration	Waiting time step
STEP-00	TWA	0:00:02	Long Duration	Waiting time step
STEP-00	TWA	0:00:02	Long Duration	Waiting time step
STEP-00	TWA	0:00:02	Long Duration	Waiting time step
STEP-00	TWA	0:00:02	Long Duration	Waiting time step
STEP-00	TWA	0:00:02	Long Duration	Waiting time step
STEP-00	TWA	0:00:02	Long Duration	Waiting time step
STEP-00	TWA	0:00:02	Long Duration	Waiting time step
STEP-00	TWA	0:00:02	Long Duration	Waiting time step
TRANS-00	CON	1	Bool	Sequence switching condition
TRANS-00	CON	1	Bool	Sequence switching condition

Function Block	Input	Value	Data Type	Description
TRANS-00	CON	1	Bool	Sequence switching condition
TRANS-00	OFL	0	Bool	Override condition
TRANS-00	OFL	0	Bool	Override condition
TRANS-00	OFL	0	Bool	Override condition
TRANS-00	OFL	0	Bool	Override condition
TRANS-00	OFL	0	Bool	Override condition
TRANS-00	OFL	0	Bool	Override condition
TRANS-00	OFL	0	Bool	Override condition
TRANS-00	OFL	0	Bool	Override condition
TRANS-00	OFL	0	Bool	Override condition
TRANS-00	OFL	0	Bool	Override condition
TRANS-00	OFL	0	Bool	Override condition
TRANS-00	OFL	0	Bool	Override condition

Table 1.3 Parameters of Function Block PC_SFC_1

1.4.2 Diagram Output References / Signal parameters

PC_SFC_1

Signal	Data Type	Value High	Value Low	Alarm Template	Archive Template
O01	BINARY	Sequence O			
OAUT01	BINARY	Automatic			
OMAN01	BINARY	Manual			
OOFR01	BINARY	OFF runnin			
OOFS01	BINARY	OFF Seq. s			
OONR01	BINARY	ON running			
OONS01	BINARY	ON Seq. Se			
OSTP01	BINARY	Stop			
S005	BINARY	S005	S005		
S010	BINARY	S010	S010		
S015	BINARY	S015	S015		
S020	BINARY	S020	S020		
S030	BINARY	S030	S030		
S040	BINARY	S040	S040		
S045	BINARY	S045	S045		

Signal	Data Type	Value High	Value Low	Alarm Template	Archive Template
S050	BINARY	S050	S050		
S060	BINARY	S060	S060		
S070	BINARY	S070	S070		
S080	BINARY	S200	S200		
S900	BINARY	S900	S900		
S910	BINARY	S910	S910		
STA01	PACKED	Status		VSF2	
TEND01	BINARY	End			
THLD01	BINARY	Hold			
TSTP01	BINARY	Stop			

Table 1.4 Signal Parameters of PC_SFC_1

1.5 Additional Information

- No additional information used in this function diagram template.

1.6 Performance of the function module in a fault scenario

No fault scenario used in this function diagram template.

2. Document References

Ref.	Document title	Document number
/1/	System 800xA PC Toolkit Library for Melody – Operation, User Manual	3BDA033439R5101EN
/2/	System 800xA PC Toolkit Library for Melody – Installation and Configuration, User Manual	3BDA033456R5103EN
/3/	S+ Engineering Function Blocks Operation	2VAA000580-530
/4/	S+ Engineering: Function Blocks Binary	2VAA000572-530
/5/	S+ Engineering: Function Blocks Control	2VAA000573-530

Table 2.1 References

3BDA033930R5101EN_FD_PC_SFC_1 Germany Jul 2011

Copyright © 2011 by ABB. All Rights Reserved
® Registered Trademark of ABB.
™ Trademark of ABB.

BU Oil, Gas and Petrochemical
Frankfurt, Germany
www.abb.com/chemicals