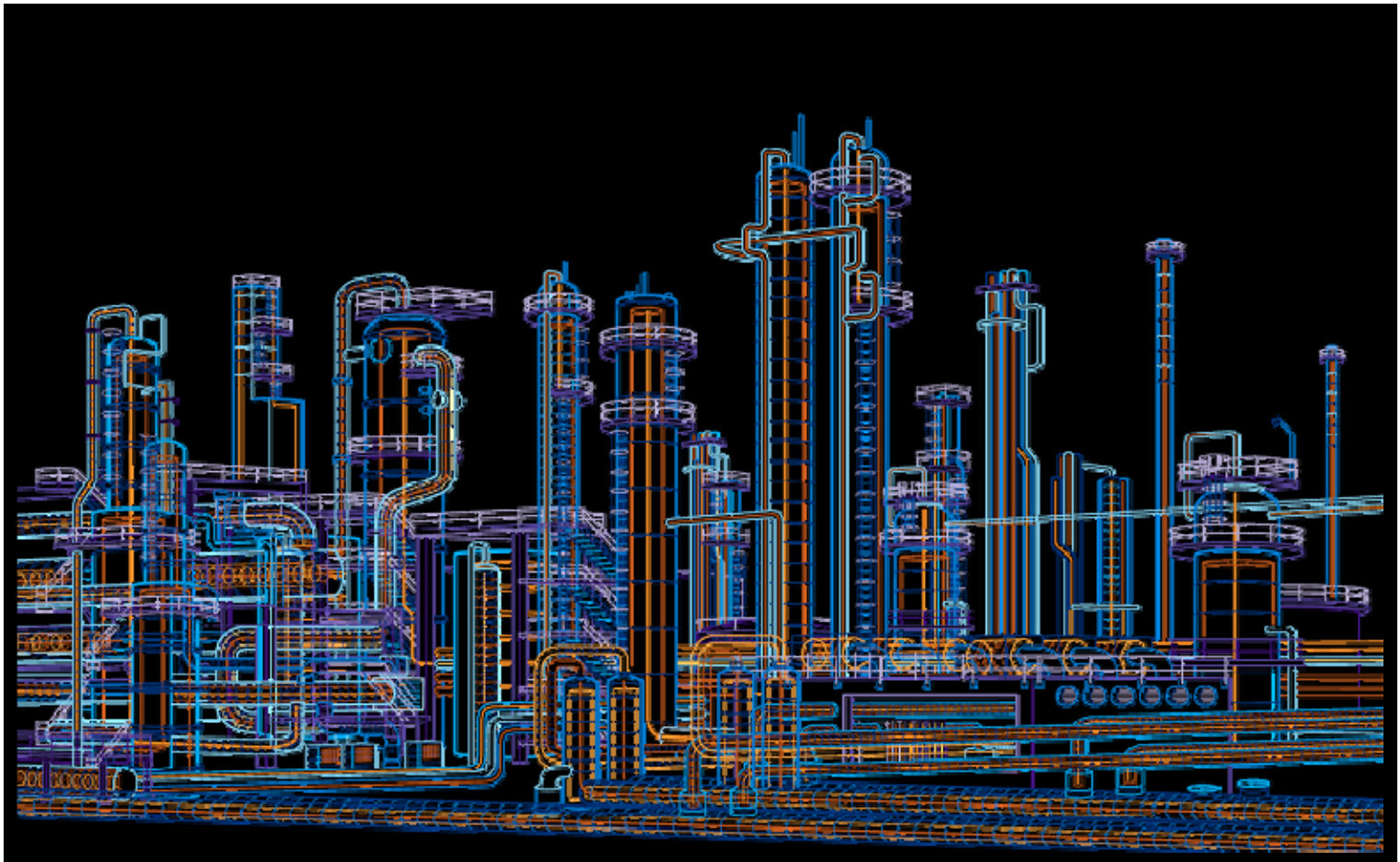

# System 800xA
# PC Toolkit Library for Melody
# Function Diagram Template - PC_HVFC_1
# User Manual

System Version 5.1

Power and productivity
for a better world™

## Purpose

The purpose of this document is to describe the features and functionality of the function diagram template for an on/off valve (fail close). This document will define the ABB Control System standards for the implementation of the Toolkit specification to be adopted across all sites and on all plants.

## Conditions

The System Extension supports System 800xA System Version 5.1 or higher.

## Notice

This document contains information about one or more ABB products and may include a description of or a reference to one or more standards that may be generally relevant to the ABB products. The presence of any such description of a standard or reference to a standard is not a representation that all of the ABB products referenced in this document support all of the features of the described or referenced standard.

This document and parts thereof must not be reproduced or copied without written permission from ABB, and the contents thereof must not be imparted to a third party nor used for any unauthorized purpose.

## Trademarks

All rights to copyrights, registered trademarks, and trademarks reside with their respective owners.

Copyright © 2011 by ABB.

All rights reserved.

Release: 2011-06-30

Document Number: 3BDA033930R5101EN_FD_PC_HVFC_1

# Table of contents

**1. Function ..... 4**
1.1 General Functional Description ..... 4
1.2 Used Blocks ..... 4
1.2.1 Function Blocks ..... 4
1.2.2 Diagram Output References ..... 5
1.2.3 I/O Modules ..... 5
1.2.4 Diagram Input References ..... 5
1.3 Function Template ..... 6
1.4 Configurable Parameters ..... 11
1.4.1 Function Blocks ..... 11
1.4.2 IO Modules ..... 12
1.4.3 Diagram Output References / Signal parameters ..... 12
1.5 Additional Information ..... 13
1.6 Performance of the function module in a fault scenario ..... 13
**2. References ..... 14**

# 1. Function

## 1.1 General Functional Description

The function diagram template PC_HVFC_1 serves to display, control and monitor an On/Off valve with safe failure position CLOSED. It covers the following main functionality:

- Open and close the actuator from a primary control function (AUTOMATIC mode)
- Manual opening and closing of the actuator (MANUAL mode)
- Interlocking of the actuator in the safe position (CLOSED)
- Limit-position indication
- Display of run-time / limit-position faults

When a fault of one of the hardware in-/outputs is detected in the system a fault message is generated and made available as an output signal at the module.

The On/Off Valve FC module provides the following hardware connections to the field:

- Command OPEN output
- Feedback valve OPEN limit switch input
- Feedback valve CLOSED limit switch input

## 1.2 Used Blocks

### 1.2.1 Function Blocks

| Function Block | Name | Library | Description |
|---|---|---|---|
| IDF1DOP-01 | PC_HVFC_1 | OLC | One direction with O&M Standard<br>Function Block description see /8/<br>Operation description see /1/ |
| NAMUREX-00 | PC_HVFC_1 | I/O | HW-In digital Ex (CBI21Ex) proximity NAMUR |
| BOUT1-00 | PC_HVFC_1 | I/O | HW-Out digital (CBO10) standard |
| IVDEC-B0 | PC_HVFC_1 | Analog/Binary | Invalid decoder Boolean |
| AND-B0 | PC_HVFC_1 | Binary | AND Boolean |
| OR-B0 | PC_HVFC_1 | Binary | OR Boolean |
| DELAY-00 | PC_HVFC_1 | Binary | Delay Boolean |
| CONPSRC | PC_HVFC_1 | Connectors | Connector source |
| CONPSNK | PC_HVFC_1 | Connectors | Connector sink |
| BSFUP_P | PC_HVFC_1 | | Bit select function diagram |

*Table 1.1 Function Blocks*

### 1.2.2 Diagram Output References

| Signal | Data Type | Description |
|---|---|---|
| O01 | BINARY | On/Off Valve (FC) |
| O01 | BINARY | On/Off Valve (FC) |
| O02 | BINARY | On/Off Valve (FC) |
| O03 | BINARY | On/Off Valve (FC) |
| O04 | BINARY | On/Off Valve (FC) |
| OAUT01 | BINARY | On/Off Valve (FC) |
| OC1_01 | BINARY | On/Off Valve (FC) |
| OCER01 | BINARY | On/Off Valve (FC) |
| OE0_01 | BINARY | On/Off Valve (FC) |
| OE1_01 | BINARY | On/Off Valve (FC) |
| OMAN01 | BINARY | On/Off Valve (FC) |
| STA01 | PACKED | On/Off Valve (FC) |
| STA02 | PACKED | On/Off Valve (FC) |

*Table 1.2 Function Diagram Output References*

### 1.2.3 I/O Modules

| Function Block | Name | Library | Description |
|---|---|---|---|
| NAMUREX-00 | PC_HVFC_1 | I/O | HW-In digital Ex (CBI21Ex) proximity NAMUR |
| BOUT1-00 | PC_HVFC_1 | I/O | HW-Out digital (CBO10) standard |

*Table 1.3 I/O Modules*

### 1.2.4 Diagram Input References

The diagram input references are not connected in this function diagram template.

## 1.3 Function Template

Reset after runtime error and endposition fault
MAN, AUTO and control inputs static

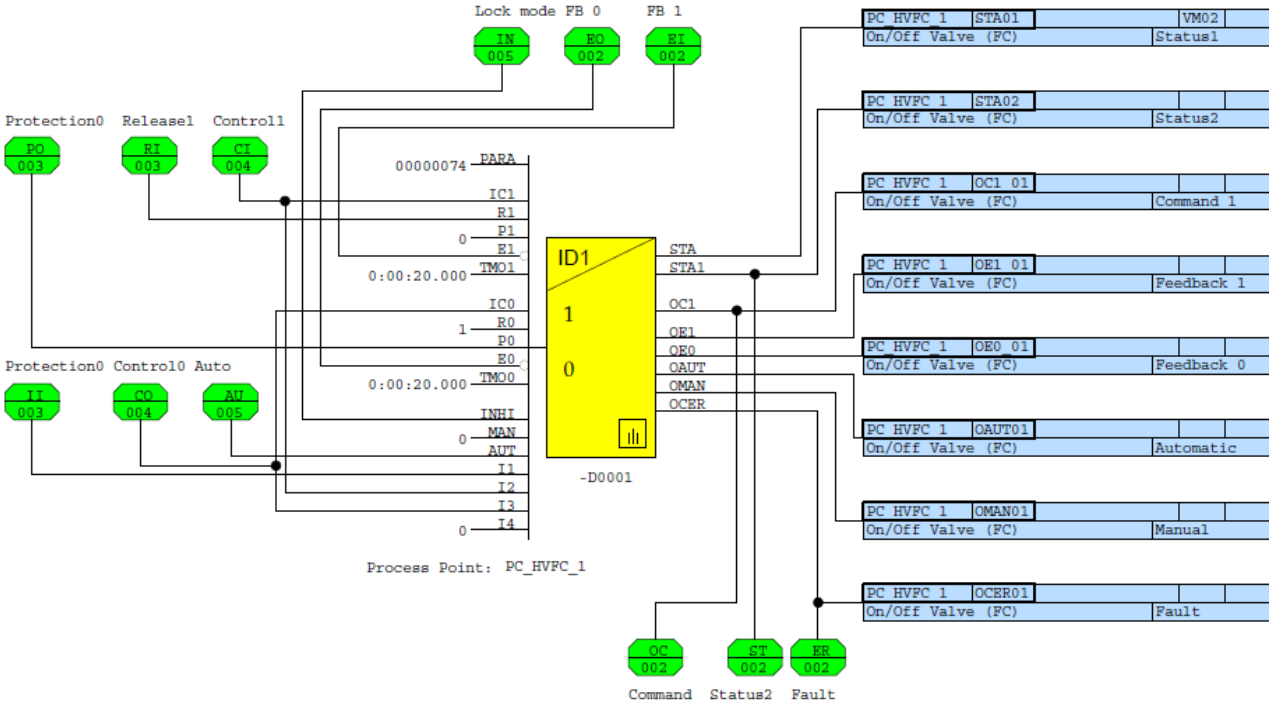


*Figure 1.1 Function Template PC_HVFC_1 (Page 1/5)*

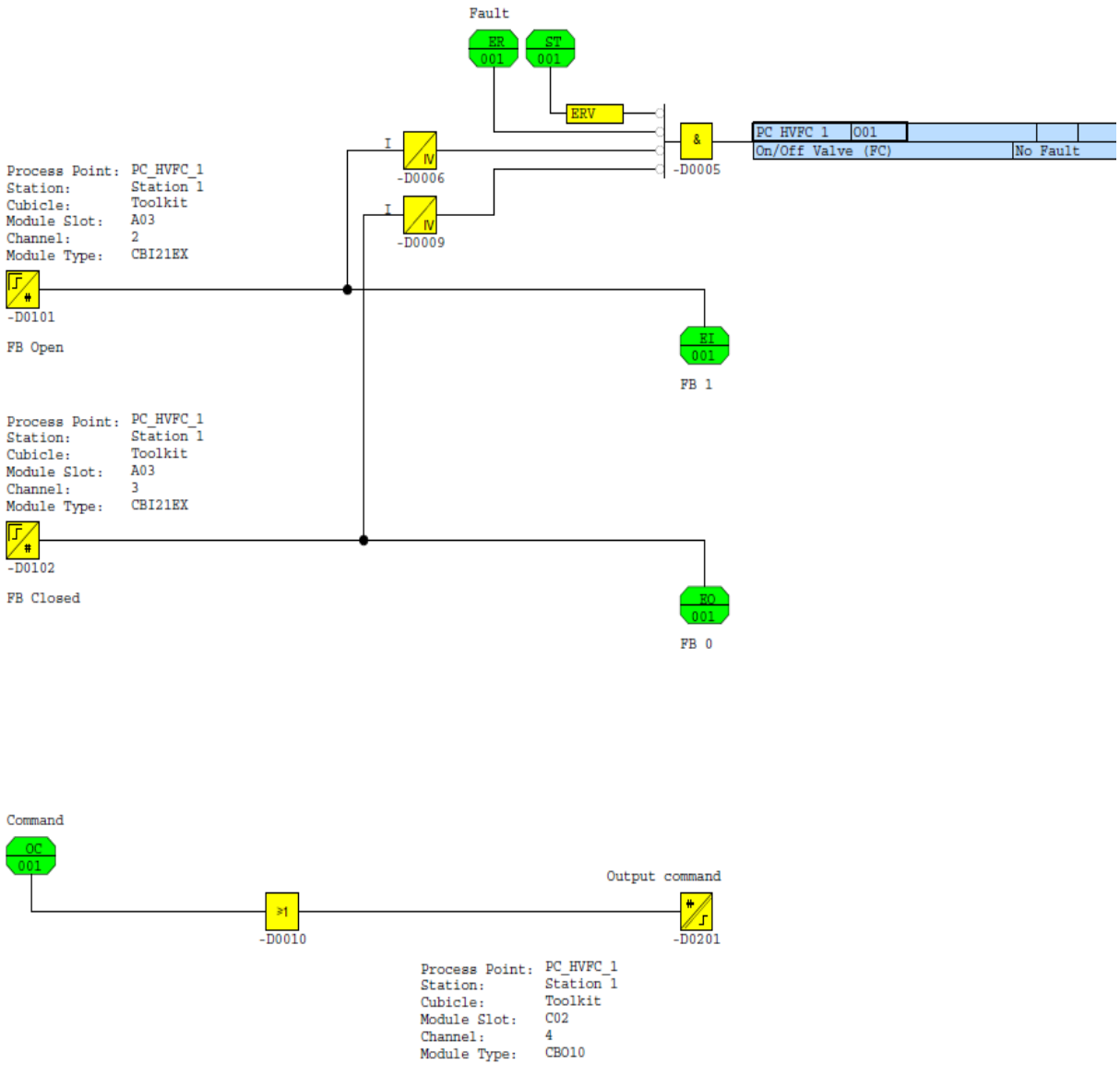


*Figure 1.2 Function Template PC_HVFC_1 (Page 2/5)*

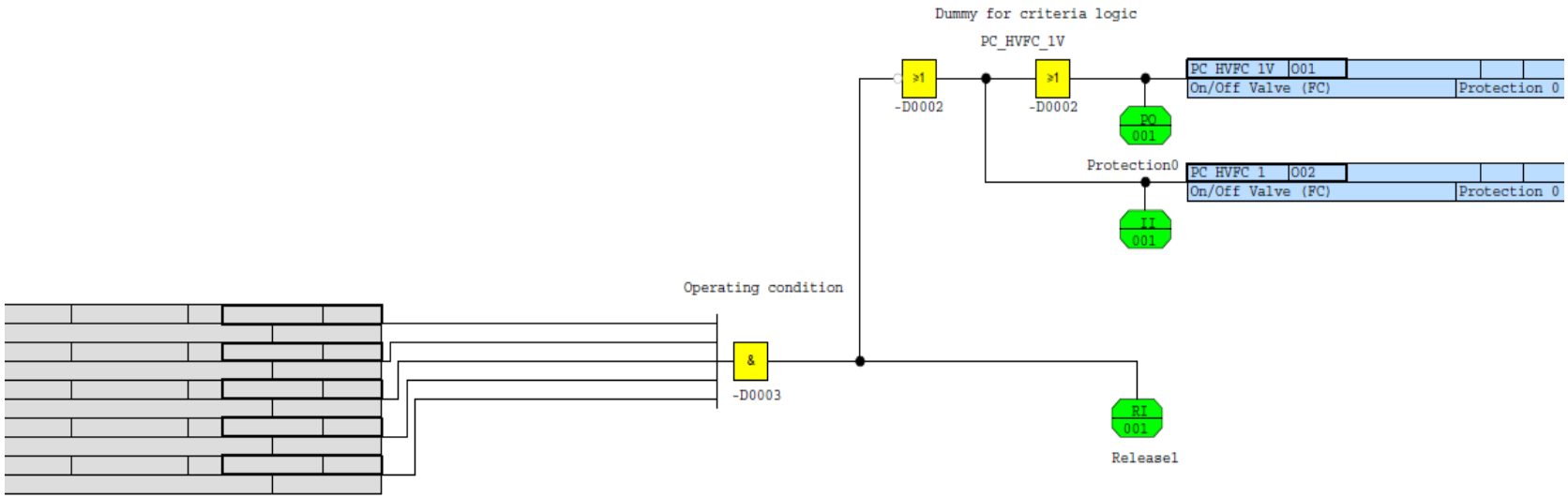


*Figure 1.3 Function Template PC_HVFC_1 (Page 3/5)*

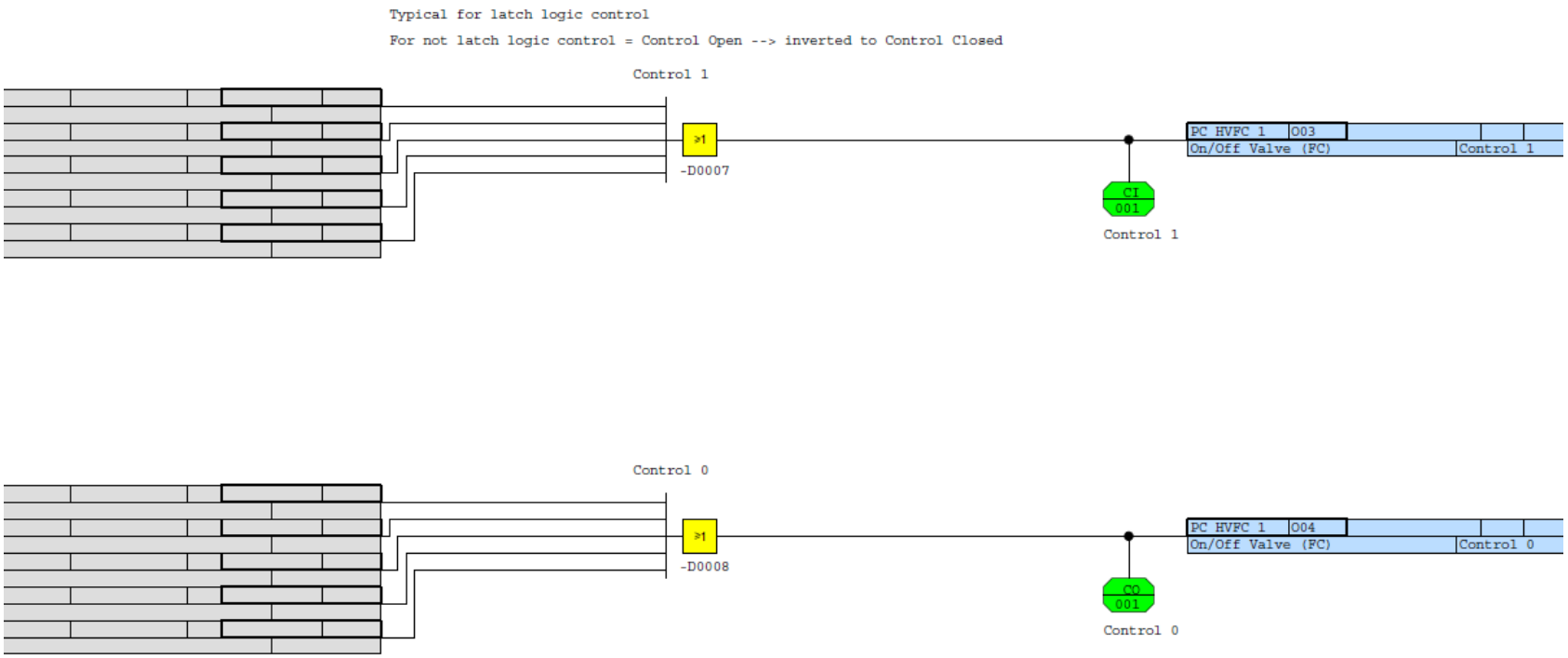


*Figure 1.4 Function Template PC_HVFC_1 (Page 4/5)*

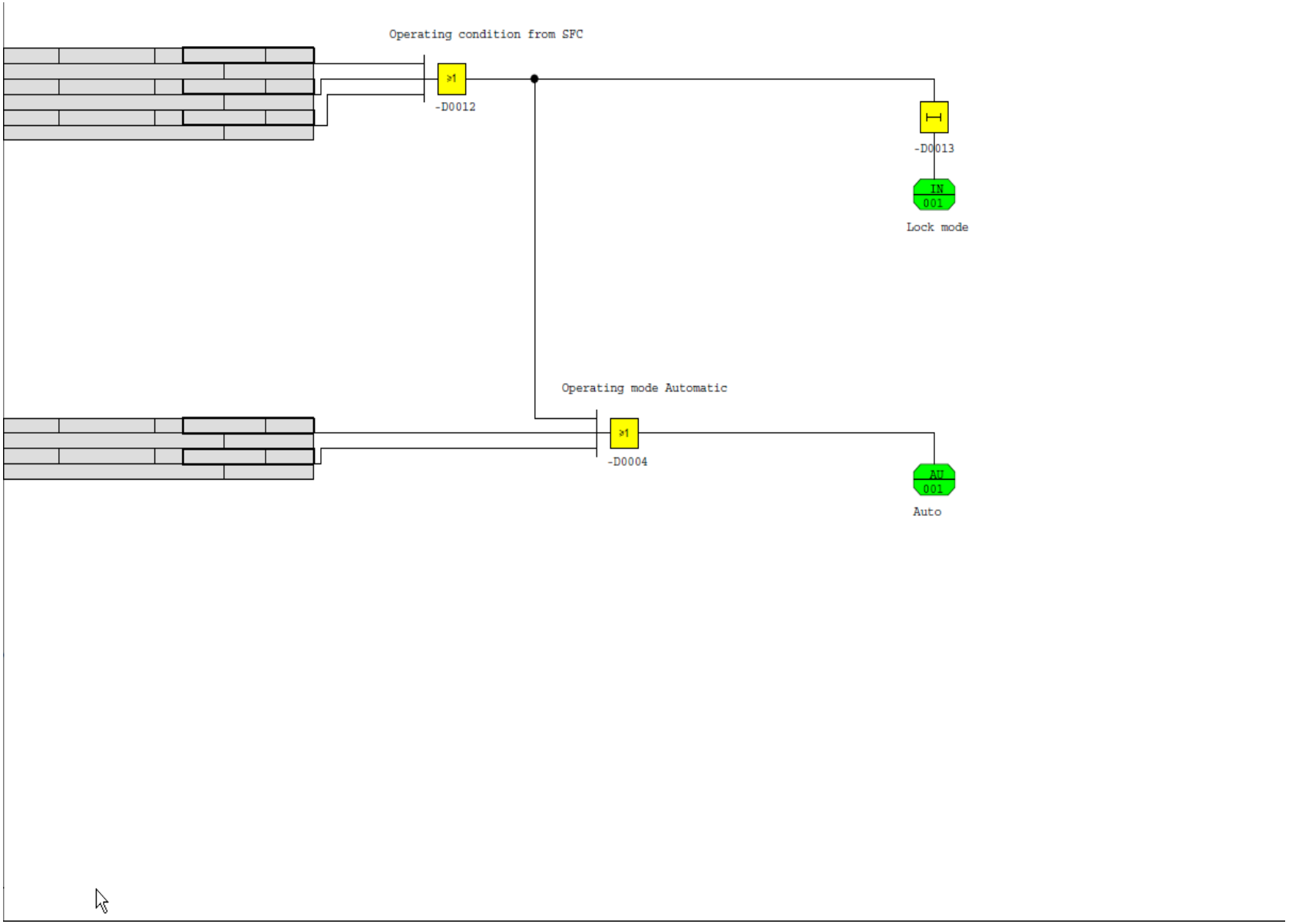


*Figure 1.5 Function Template PC_HVFC_1 (Page 5/5)*

## 1.4 Configurable Parameters

The following parameters are in the function diagram template and can be engineered using Excel sheet data mechanisms.

In general function block parameters and signals can be exported to Excel sheet and can be engineered and imported.

### 1.4.1 Function Blocks

The visible and not connected parameters in the function diagram template are in **Bold**.

#### PC_HVFC_1

| Function Block | Input | Value | Data Type | Description |
|---|---|---|---|---|
| BSFUP_P | BIT | 0 | Bool | |
| DELAY-00 | RS1 | 0 | Bool | Reset |
| DELAY-00 | RS2 | 0 | Bool | Reset |
| DELAY-00 | T1 | 0:00:02.000 | Duration | Delay in starting |
| DELAY-00 | T2 | 0:00:00.000 | Duration | Drop delay |
| IDF1DOP-01 | AUT | Connected | Bool | Automatic |
| IDF1DOP-01 | E0 | Connected | Bool | Feedback 0 |
| IDF1DOP-01 | E1 | Connected | Bool | Feedback 1 |
| IDF1DOP-01 | FCUT | 0 | Bool | Disturbance switchoff |
| IDF1DOP-01 | FINT | 0 | Bool | Disturbance intervention |
| IDF1DOP-01 | I1 | Connected | Bool | Input boolean |
| IDF1DOP-01 | I2 | Connected | Bool | Input boolean |
| IDF1DOP-01 | I3 | Connected | Bool | Input boolean |
| IDF1DOP-01 | **I4** | **0** | **Bool** | **Input boolean** |
| IDF1DOP-01 | IC0 | Connected | Bool | Control 0 |
| IDF1DOP-01 | IC1 | Connected | Bool | Control 1 |
| IDF1DOP-01 | INHI | Connected | Bool | Lock mode switchover |
| IDF1DOP-01 | LINT | 0 | Bool | Local intervention |
| IDF1DOP-01 | **MAN** | **0** | **Bool** | **Manual** |
| IDF1DOP-01 | OPEX | 00000000 | Bool | Boolean logic extern. |
| IDF1DOP-01 | P0 | Connected | Bool | Protection 0 |
| IDF1DOP-01 | **P1** | **0** | **Bool** | **Protection 1** |
| IDF1DOP-01 | **PARA** | **00000074** | **Bool** | **PBool** |
| IDF1DOP-01 | **R0** | **Connected** | **Bool** | **Release 0** |
| IDF1DOP-01 | R1 | Connected | Bool | Release 1 |

| Function Block | Input | Value | Data Type | Description |
|---|---|---|---|---|
| IDF1DOP-01 | TEST | 0 | Bool | Test position |
| IDF1DOP-01 | **TMO0** | **0:00:20.000** | **Duration** | **Monitoring time 0** |
| IDF1DOP-01 | **TMO1** | **0:00:20.000** | **Duration** | **Monitoring time 1** |

*Table 1.4 Parameters of Function Block PC_HVFC_1*

### 1.4.2 IO Modules

#### PC_HVFC_1

| Function Block | Input | Value | Data Type | Description |
|---|---|---|---|---|
| BOUT1-00 | SUV | 0 | Bool | Substitute value definition |
| BOUT1-00 | SUV_ON | 1 | Bool | Substitute value on |
| BOUT1-00 | T1IV | 0:00:01.500 | Duration | Del. time from INV to valid |

*Table 1.5 Parameters of IO Module PC_HVFC_1*

#### PC_HVFC_1

| Function block | Input | Value | Data type | Description |
|---|---|---|---|---|
| NAMUREX-00 | EBMO | 1 | Integer | Line break monitoring |
| NAMUREX-00 | EBMO | 1 | Integer | Line break monitoring |

*Table 1.6 Parameters of IO Module PC_HVFC_1*

### 1.4.3 Diagram Output References / Signal parameters

#### PC_HVFC_1

| Signal | Data Type | Value High | Value Low | Alarm Template | Archive Template |
|---|---|---|---|---|---|
| O01 | BINARY | No Fault | | | |
| O01 | BINARY | Protection 0 | Release | | |
| O02 | BINARY | Protection 0 | Release | | |
| O03 | BINARY | Control 1 | | | |
| O04 | BINARY | Control 0 | | | |
| OAUT01 | BINARY | Automatic | | | |
| OC1_01 | BINARY | Command 1 | | | |
| OCER01 | BINARY | Fault | | | |
| OE0_01 | BINARY | Feedback 0 | | | |
| OE1_01 | BINARY | Feedback 1 | | | |
| OMAN01 | BINARY | Manual | | | |

| Signal | Data Type | Value High | Value Low | Alarm Template | Archive Template |
|---|---|---|---|---|---|
| STA01 | PACKED | Status1 | | VM02 | |

*Table 1.7 Signal Parameters of PC_HVFC_1*

### PC_HVFC_1V

| Signal | Data Type | Value High | Value Low | Alarm Template | Archive Template |
|---|---|---|---|---|---|
| O01 | BINARY | Protection 0 | Release | | |

*Table 1.8 Signal Parameters of PC_HVFC_1V*

## 1.5 Additional Information

- The substitute value strategy (LOW, HIGH or actual value (hold last valid value)) is defined in the quality tab from the input configuration of the connector “E0” and “E1” for the function block IDF1DOP-01.
- The signal quality (Negate/inverted) is defined in the quality tab from the input configuration of the connector “E0” and “E1” for the function block IDF1DOP-01.

## 1.6 Performance of the function module in a fault scenario

In a fault scenario the module will generate an alarm/event and the function diagram output reference “OCER01” will be set to true.

# 2. References

| Ref. | Document title | Document number |
|---|---|---|
| /1/ | System 800xA PC Toolkit Library for Melody – Operation, User Manual | 3BDA033439R5101EN |
| /2/ | System 800xA PC Toolkit Library for Melody – Installation and Configuration, User Manual | 3BDA033456R5103EN |
| /3/ | S+ Engineering Function Blocks Operation | 2VAA000580-530 |
| /4/ | S+ Control – Melody – Binary Input | 2VAA000595-100 |
| /5/ | S+ Control – Melody – Binary Output | 2VAA000596-100 |
| /6/ | S+ Engineering: Function Blocks Analog / Binary | 2VAA000571-530 |
| /7/ | S+ Engineering: Function Blocks Binary | 2VAA000572-530 |
| /8/ | S+ Engineering: Function Blocks Actuator | 2VAA000575-530 |

*Table 2.1 References*

3BDA033930R5101EN_FD_PC_HVFC_1 Germany Jul 2011

Copyright © 2011 by ABB. All Rights Reserved
® Registered Trademark of ABB.
™ Trademark of ABB.

BU Oil, Gas and Petrochemical
Frankfurt, Germany
www.abb.com/chemicals