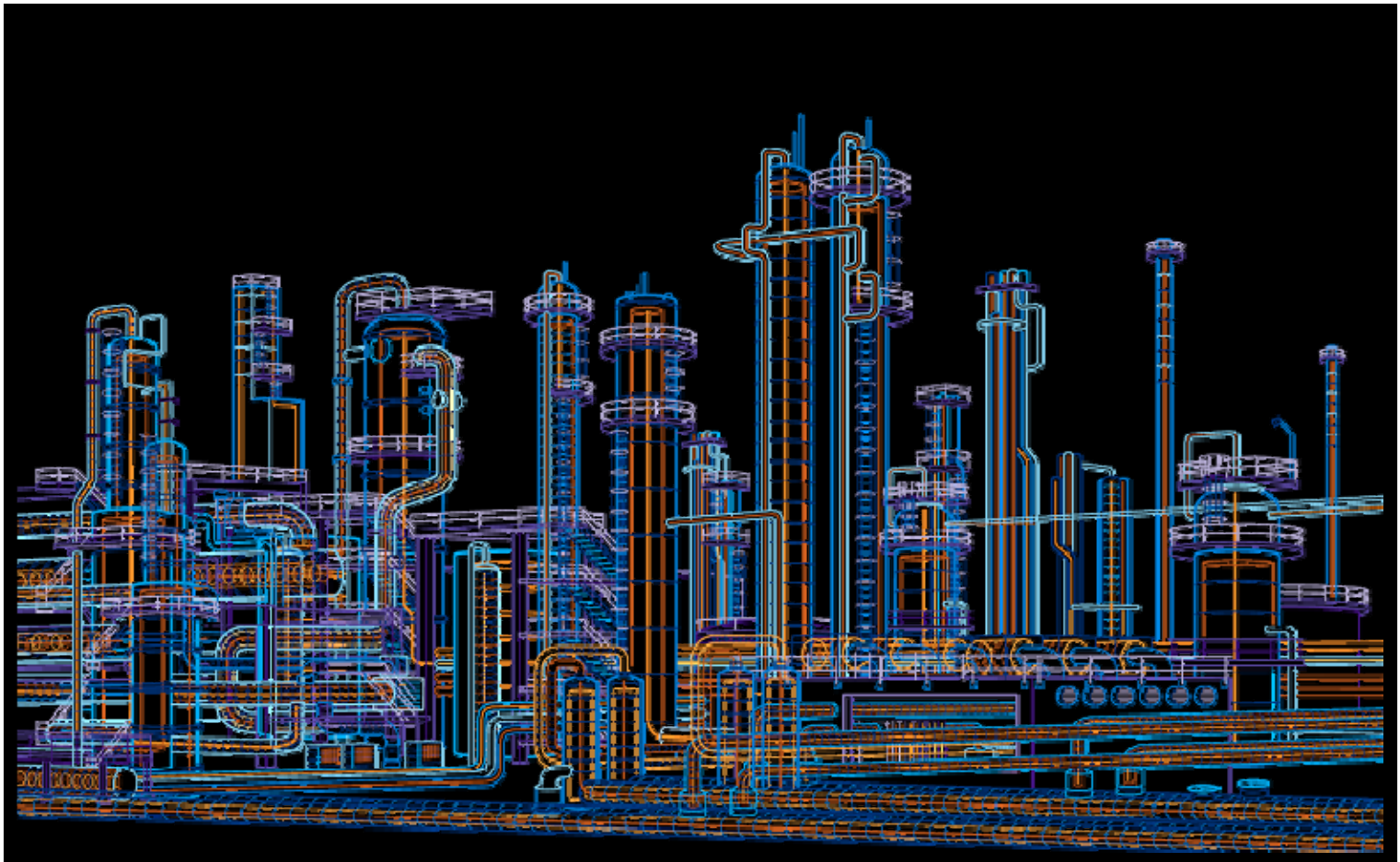

System 800xA
PC Toolkit Library for Melody
Function Diagram Template - PC_CNT_2
User Manual

System Version 5.1

Power and productivity
for a better world™

Purpose

The purpose of this document is to describe the features and functionality of the function diagram template for totalizer. This document will define the ABB Control System standards for the implementation of the Toolkit specification to be adopted across all sites and on all plants.

Conditions

The System Extension supports System 800xA System Version 5.1 or higher.

Notice

This document contains information about one or more ABB products and may include a description of or a reference to one or more standards that may be generally relevant to the ABB products. The presence of any such description of a standard or reference to a standard is not a representation that all of the ABB products referenced in this document support all of the features of the described or referenced standard.

This document and parts thereof must not be reproduced or copied without written permission from ABB, and the contents thereof must not be imparted to a third party nor used for any unauthorized purpose.

Trademarks

All rights to copyrights, registered trademarks, and trademarks reside with their respective owners.

Copyright © 2011 by ABB.

All rights reserved.

Release: 2011-06-30

Document Number: 3BDA033930R5101EN_FD_PC_CNT_2

Table of contents

1. Function 4
1.1 General Functional Description 4
1.2 Used Blocks 4
1.2.1 Function Blocks 4
1.2.2 Diagram Output References 4
1.2.3 I/O Modules 5
1.2.4 Diagram Input References 5
1.3 Function Template 6
1.4 Configurable Parameters 7
1.4.1 Function Blocks 7
1.4.2 Diagram Output References / Signal Parameters 8
1.5 Additional Information 8
2. Document References 9

1. Function

1.1 General Functional Description

The function diagram template PC_CNT_2 implements a counter device for endless analog values in the control system. The template provides the following functions:

- Display of the current counter value (QY/PVi) and the counter value during the last counter reset (QOY/PV)
- Resetting of the counter through a higher-level control (event-driven or cyclically)
- Standard counting function
- Supervision of the signal against a two high limits (Limit H and Limit HH). Whenever a limit is violated, an alarm/event is generated (depending on the alarm/event configuration)
- En-/Disabling alarms via logic
- Inhibiting limit supervision output for further processing via logic
- Entering of an alternative input value via faceplate

1.2 Used Blocks

1.2.1 Function Blocks

Function Block	Name	Library	Description
ANTOT-00	PC_CNT_2	Analog	Totalized value analog Real Function Block description see /6/ Operation description see /1/
GTEQ-R0	PC_CNT_2	Analog/Binary	Analog comparator A>=B Real
DYNOR-00	PC_CNT_2	Binary	OR dynamic Boolean
SWTV1-R0	PC_CNT_2	Analog/Binary	Changeover switch Real
DELAY-00	PC_CNT_2	Binary	Delay Boolean
OR-B0	PC_CNT_2	Binary	OR Boolean
LEEQ-R0	PC_CNT_2	Analog/Binary	Analog comparator A<=B Real

Table 1.1 Function Blocks

1.2.2 Diagram Output References

Signal	Data Type	Description
O01	BINARY	Analog Input endless
QOY01	ANALOG	Analog Input endless
QY01	ANALOG	Analog Input endless
STA01	PACKED	Analog Input endless

Table 1.2 Function Diagram Output References

1.2.3 I/O Modules

No I/O modules used in this function diagram template.

1.2.4 Diagram Input References

The diagram input references are not connected in this function diagram template.

1.3 Function Template

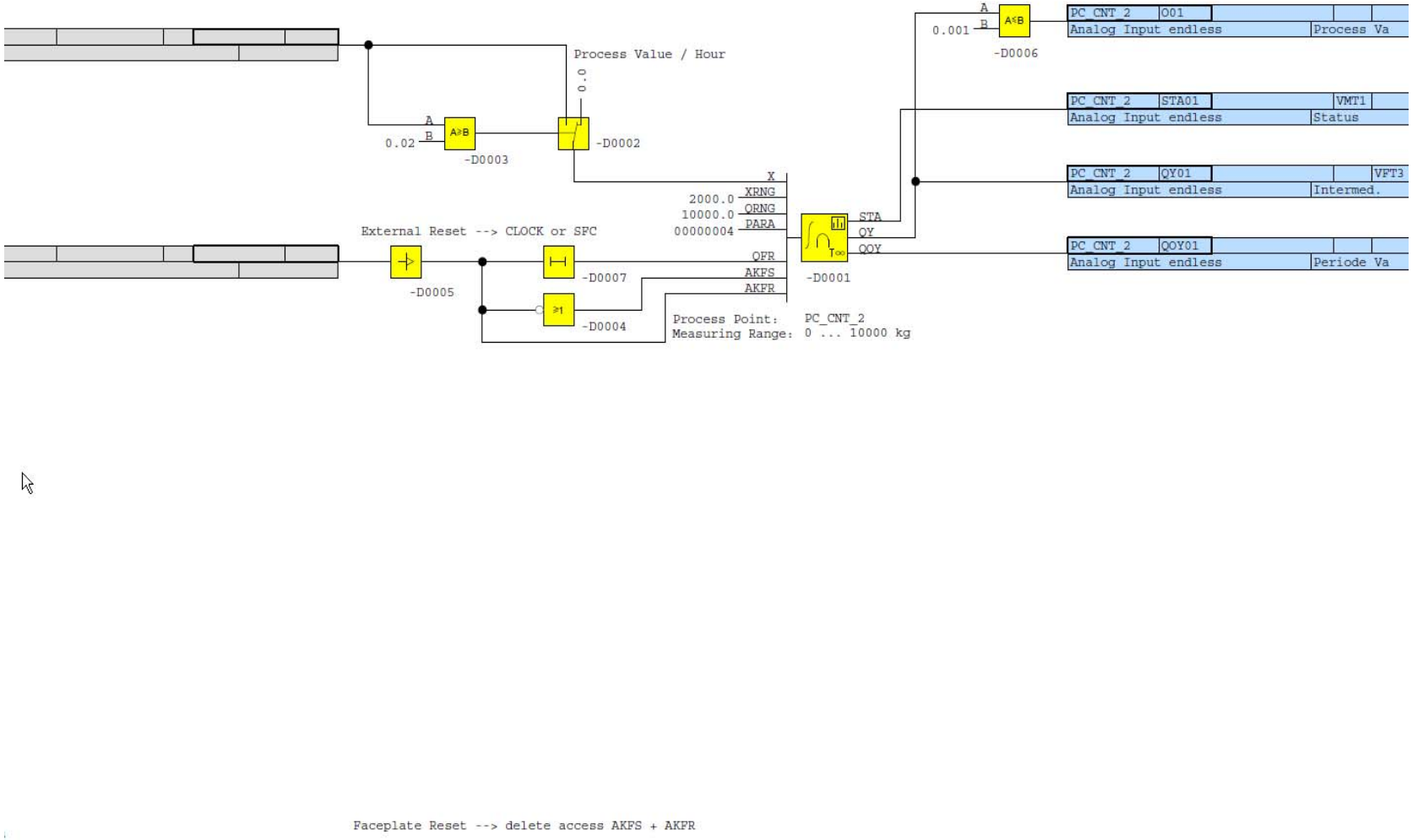

Figure 1.1 Function Template PC_CNT_2

1.4 Configurable Parameters

The following parameters are in the function diagram template and can be engineered using Excel sheet data mechanisms.

In general function block parameters and signals can be exported to Excel sheet and can be engineered and imported.

1.4.1 Function Blocks

The visible and not connected parameters in the function diagram template are in **Bold**.

PC_CNT_2

Function Block	Input	Value	Data Type	Description
ANTOT-00	AHB	0.0	Real	H-limit hysteresis
ANTOT-00	AHD	0	Bool	Disable H-limit
ANTOT-00	AHHB	0.0	Real	HH-limit hysteresis
ANTOT-00	AHHD	0	Bool	Disable HH-limit
ANTOT-00	AHHS	0	Bool	HH-limit message suppr.
ANTOT-00	AHHV	1.05	Real	HH-limit value
ANTOT-00	AHS	0	Bool	H-limit message suppr.
ANTOT-00	AHV	1.0	Real	H-limit value
ANTOT-00	AKFR	Connected	Bool	Reset access lock
ANTOT-00	AKFS	Connected	Bool	Set access lock
ANTOT-00	ATV	0.0	Real	Alternative value
ANTOT-00	FI1	1	Packed Bool	Backup input boolean
ANTOT-00	FIP1	00000000	Packed Bool	Backup input PBool
ANTOT-00	FX1	0.0	Real	Backup input real
ANTOT-00	MDO	00000000	Packed Bool	Oper. word operation
ANTOT-00	**PARA**	**00000004**	**Packed Bool**	**PBool**
ANTOT-00	QFR	Connected	Bool	Reset quantity value
ANTOT-00	**QRNG**	**10000.0**	**Real**	**Quantity value value range**
ANTOT-00	X	Connected	Real	Input Real
ANTOT-00	**XRNG**	**2000.0**	**Real**	**Value range input X**
DELAY-00	RS1	0	Bool	Reset
DELAY-00	RS2	0	Bool	Reset
DELAY-00	T1	0:00:01.000	Duration	Delay in starting
DELAY-00	T2	0:00:00.000	Duration	Drop delay
DYNOR-00	T	0:00:02.000	Duration	Time value

Function Block	Input	Value	Data Type	Description
GTEQ-R0	**B**	**0.02**	**Real**	**Input real**
LEEQ-R0	**B**	**0.001**	**Real**	**Input real**
SWTV1-R0	**X1**	**0.0**	**Real**	**Input real**

Table 1.3 Parameters of Function Block PC_CNT_2

1.4.2 Diagram Output References / Signal Parameters

PC_CNT_2

Signal	Data Type	Value High	Value Low	Alarm Template	Archive Template
O01	BINARY	Process Va			
QOY01	ANALOG	Periode Va			
QY01	ANALOG	Intermed.			Fast_7d
STA01	PACKED	Status		VMT1	

Table 1.4 Signal Parameters of PC_CNT_2

1.5 Additional Information

- The substitute value strategy is realized in the function block using the input “MDO” (Set/Reset alternative value or substitute value reset).
- In addition to them an alternative value can be activated independent from the invalidity status of the function.
- In the input configuration of “X” and in the tab quality a substitute value (actual value or a fixed value) can be defined.

2. Document References

Ref.	Document title	Document number
/1/	System 800xA PC Toolkit Library for Melody – Operation, User Manual	3BDA033439R5101EN
/2/	System 800xA PC Toolkit Library for Melody – Installation and Configuration, User Manual	3BDA033456R5103EN
/3/	S+ Engineering Function Blocks Operation	2VAA000580-530
/4/	S+ Engineering: Function Blocks Analog / Binary	2VAA000571-530
/5/	S+ Engineering: Function Blocks Binary	2VAA000572-530
/6/	S+ Engineering: Function Blocks Analog	2VAA000570-530

Table 2.1 References

3BDA033930R5101EN_FD_PC_CNT_2 Germany Jul 2011

Copyright © 2011 by ABB. All Rights Reserved
® Registered Trademark of ABB.
™ Trademark of ABB.

BU Oil, Gas and Petrochemical
Frankfurt, Germany
www.abb.com/chemicals