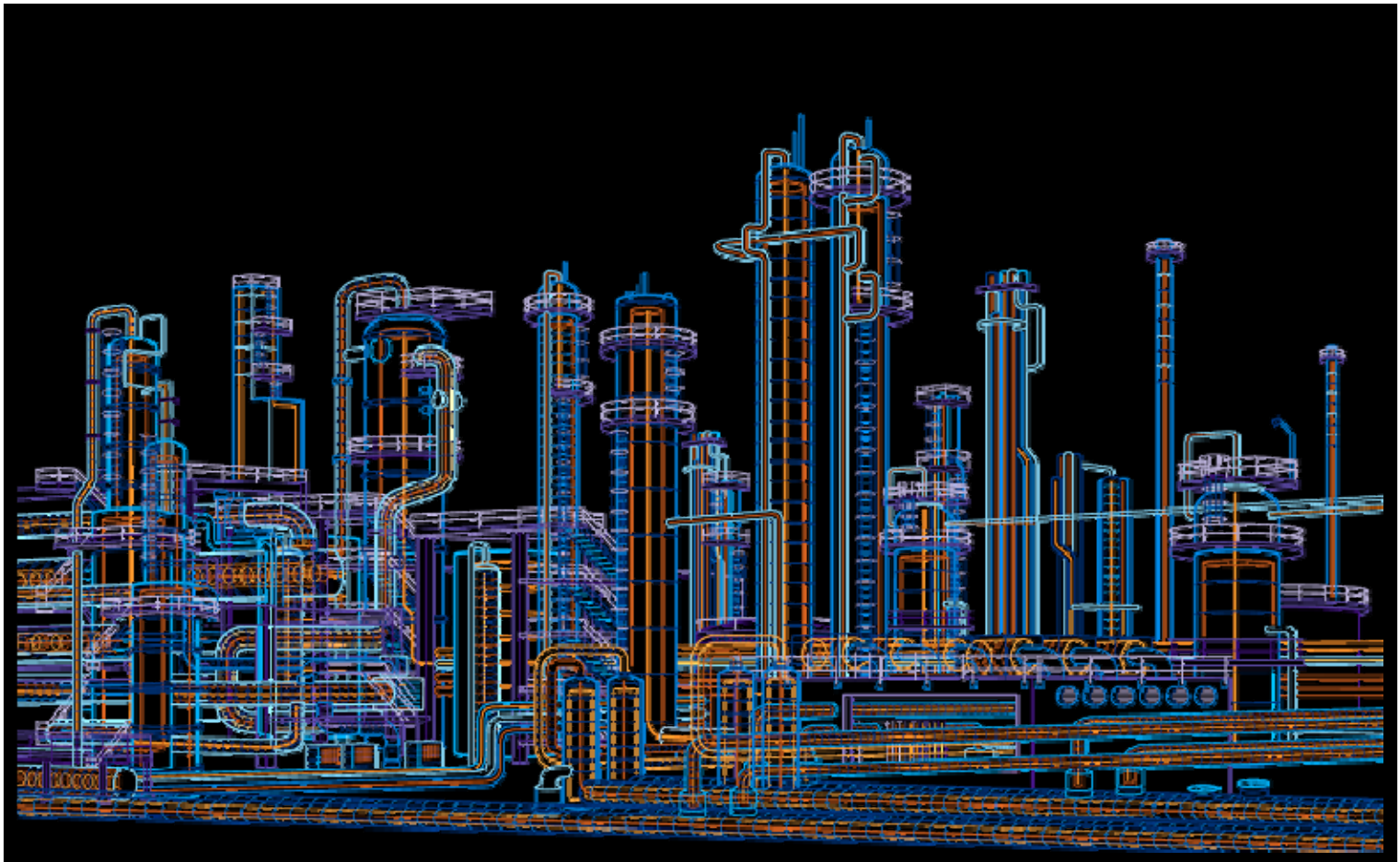

System 800xA
PC Toolkit Library for Melody
Function Diagram Template - PC_BO_1
User Manual

System Version 5.1

Power and productivity
for a better world™

Purpose

The purpose of this document is to describe the features and functionality of the function diagram template for a binary output. This document will define the ABB Control System standards for the implementation of the Toolkit specification to be adopted across all sites and on all plants.

Conditions

The System Extension supports System 800xA System Version 5.1 or higher.

Notice

This document contains information about one or more ABB products and may include a description of or a reference to one or more standards that may be generally relevant to the ABB products. The presence of any such description of a standard or reference to a standard is not a representation that all of the ABB products referenced in this document support all of the features of the described or referenced standard.

This document and parts thereof must not be reproduced or copied without written permission from ABB, and the contents thereof must not be imparted to a third party nor used for any unauthorized purpose.

Trademarks

All rights to copyrights, registered trademarks, and trademarks reside with their respective owners.

Copyright © 2011 by ABB.

All rights reserved.

Release: 2011-06-30

Document Number: 3BDA033930R5101EN_FD_PC_BO_1

Table of contents

1. Function 4
1.1 General Functional Description 4
1.2 Used Blocks 4
1.2.1 Function Blocks 4
1.2.2 Diagram Output References 4
1.2.3 I/O Modules 5
1.2.4 Diagram Input References 5
1.3 Function Template 6
1.4 Configurable Parameters 11
1.4.1 Function Blocks 11
1.4.2 IO Modules 12
1.4.3 Diagram Output References / Signal Parameters 12
1.5 Additional Information 12
1.6 Performance of the function module in a fault scenario 13
2. Document References 14

1. Function

1.1 General Functional Description

The function diagram template PC_BO_1 serves to display, control and monitor a binary signal output. When the function is in automatic mode, the output can be set by CI001 and reset by CO001 (CO001 is low-active and dominant). The output signal can be transmitted to a hardwired digital output module or to a software output. When a fault of the binary output (hardware) is detected in the system a module-fault message is generated and made available as an output signal at the module.

The template covers the following main functionality:

- Display of the binary value in the faceplate.
- The output value can result from the faceplate, from the logic in automatic mode
- The hardware output is monitored against errors.

1.2 Used Blocks

1.2.1 Function Blocks

Function Block	Name	Library	Description
IDF1DOP-01	PC_BO_1	OLC	IDF one direction with O&M Standard Function Block description see /7/ Operation description see /1/
BOUT1-00	PC_BO_1	I/O	HW-Out digital (CBO10) standard
OR-B0	PC_BO_1	Binary	OR Boolean
BSFUP_P	PC_BO_1		Bit select function diagram
AND_B0	PC_BO_1	Binary	AND Boolean
CONPSRC	PC_BO_1	Connectors	Connector source
CONPSNK	PC_BO_1	Connectors	Connector sink
DELAY-00	PC_BO_1	Binary	Delay Boolean

Table 1.1 Function Blocks

1.2.2 Diagram Output References

Signal	Data Type	Description
O01	BINARY	Binary Output Module
O01	BINARY	Binary Output Module
O02	BINARY	Binary Output Module
O03	BINARY	Binary Output Module
O04	BINARY	Binary Output Module
OAUT01	BINARY	Binary Output Module

Signal	Data Type	Description
OC1_01	BINARY	Binary Output Module
OCER01	BINARY	Binary Output Module
OE0_01	BINARY	Binary Output Module
OE1_01	BINARY	Binary Output Module
OMAN01	BINARY	Binary Output Module
STA01	PACKED	Binary Output Module
STA02	PACKED	Binary Output Module

Table 1.2 Function Diagram Output References

1.2.3 I/O Modules

Function Block	Name	Library	Description
BOUT1-00	PC_BO_1	I/O	HW-Out digital (CBO10) standard

Table 1.3 I/O Modules

1.2.4 Diagram Input References

The diagram input references are not connected.

1.3 Function Template

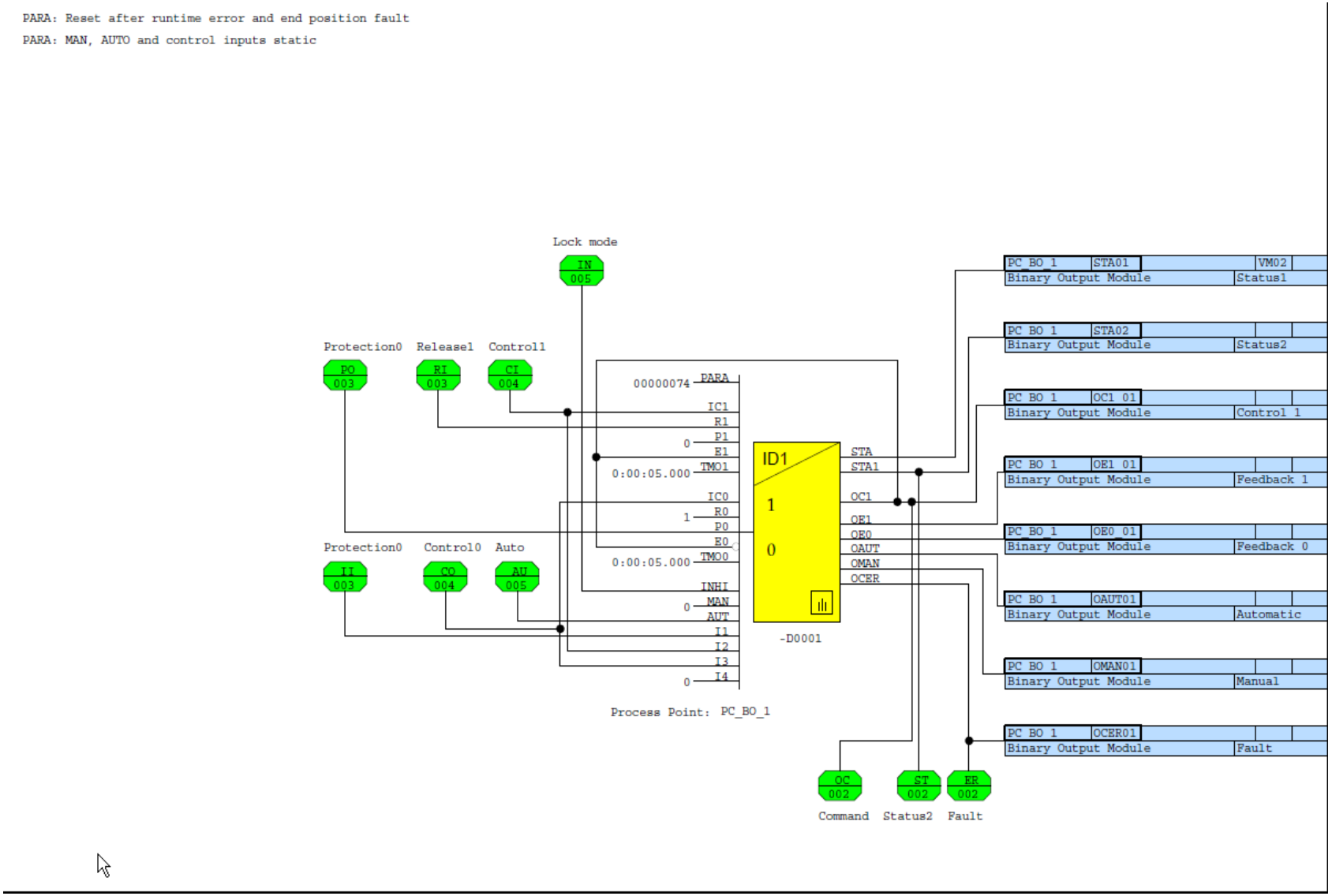

Figure 1.1 Function Template PC_BO_1 (Page 1/5)

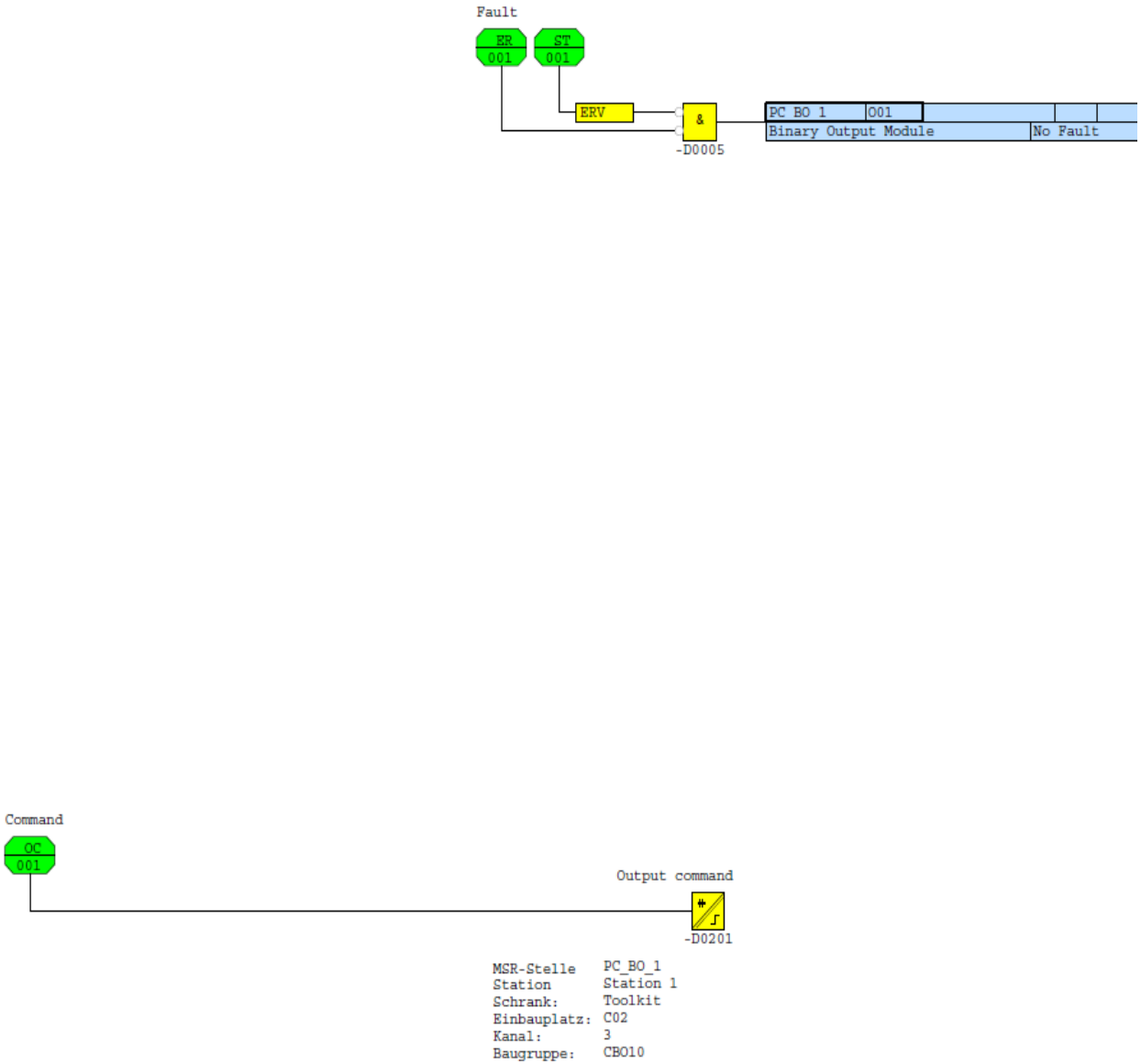

Figure 1.2 Function Template PC_BO_1 (Page 2/5)

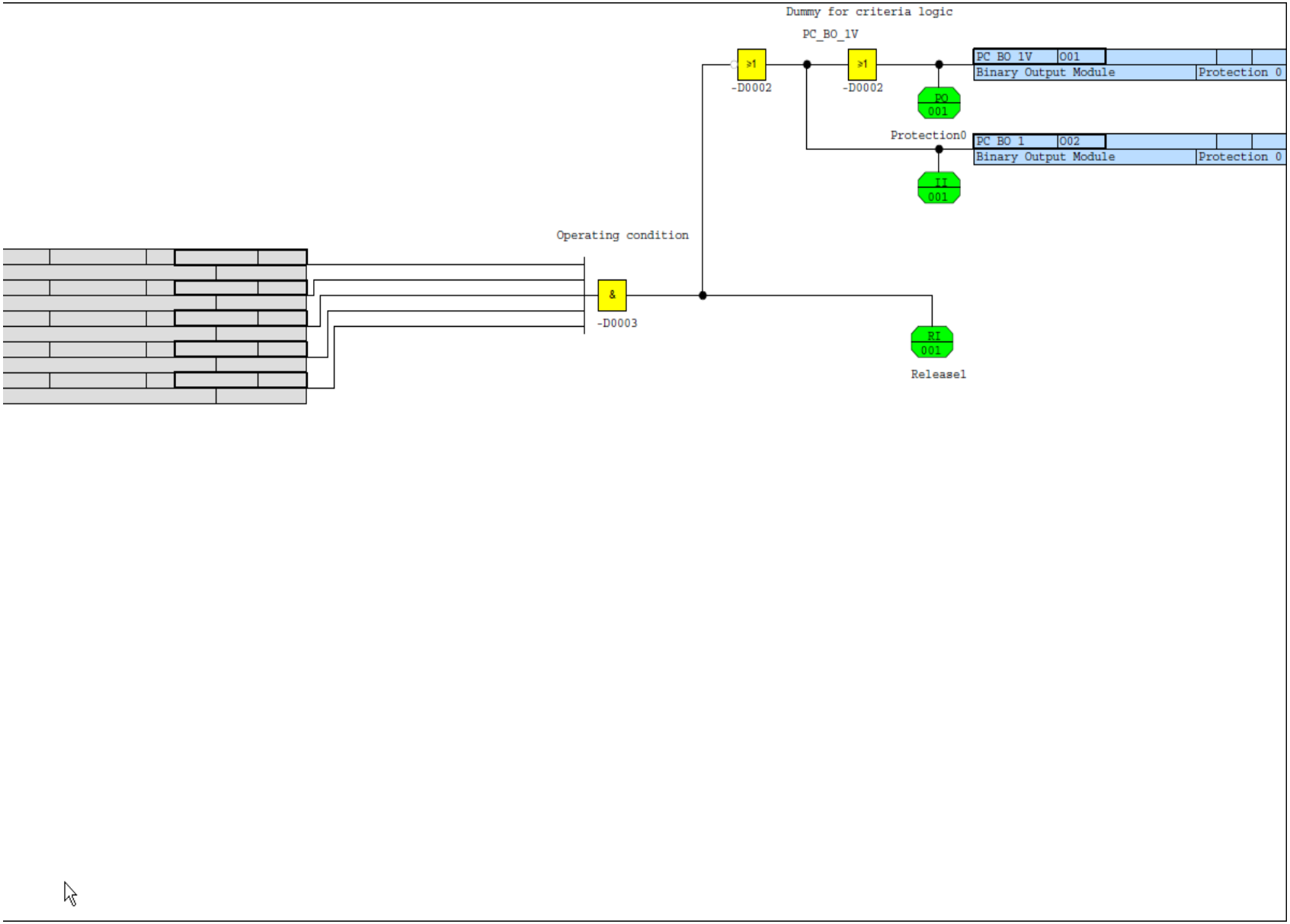

Figure 1.3 Function Template PC_BO_1 (Page 3/5)

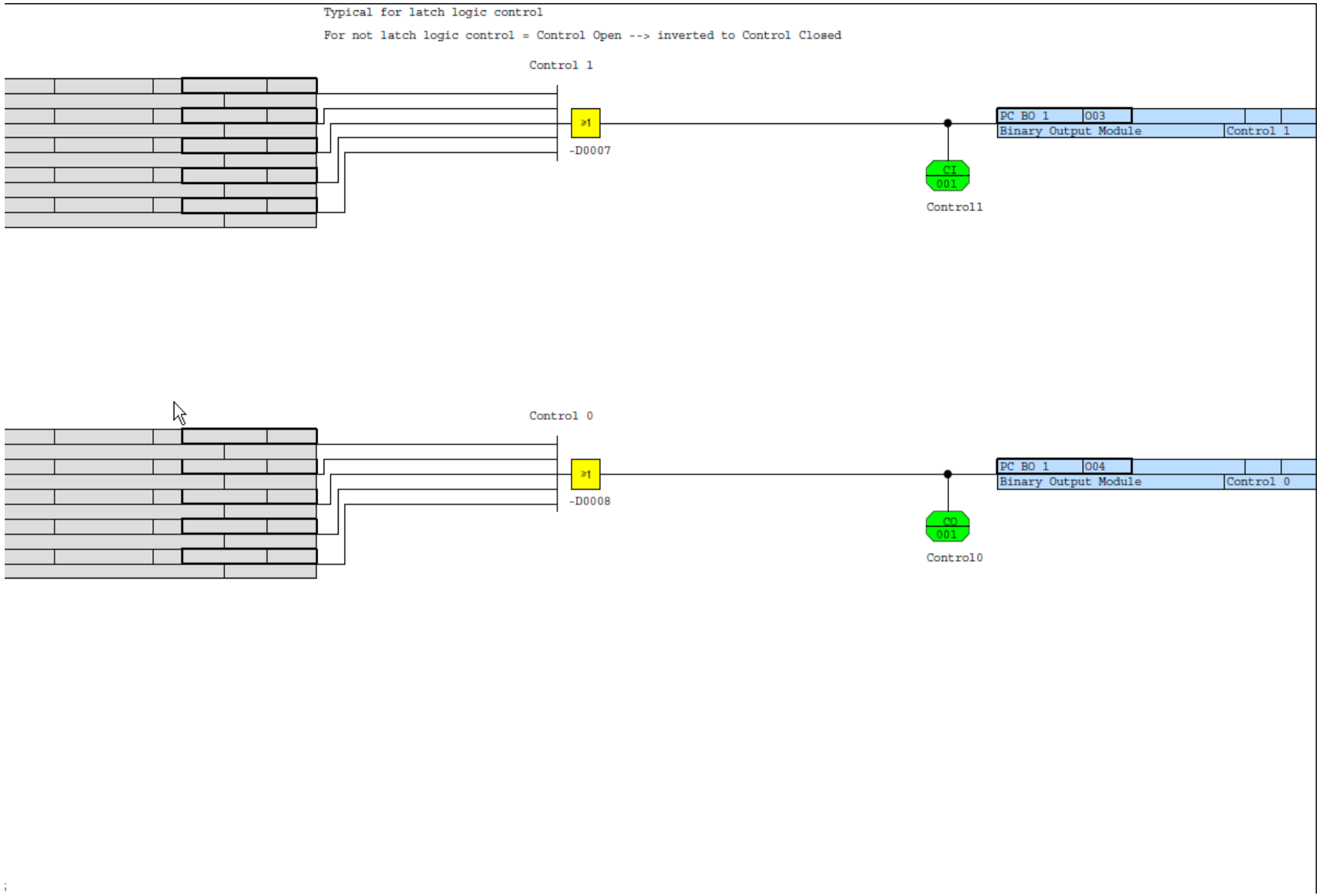

Figure 1.4 Function Template PC_BO_1 (Page 4/5)

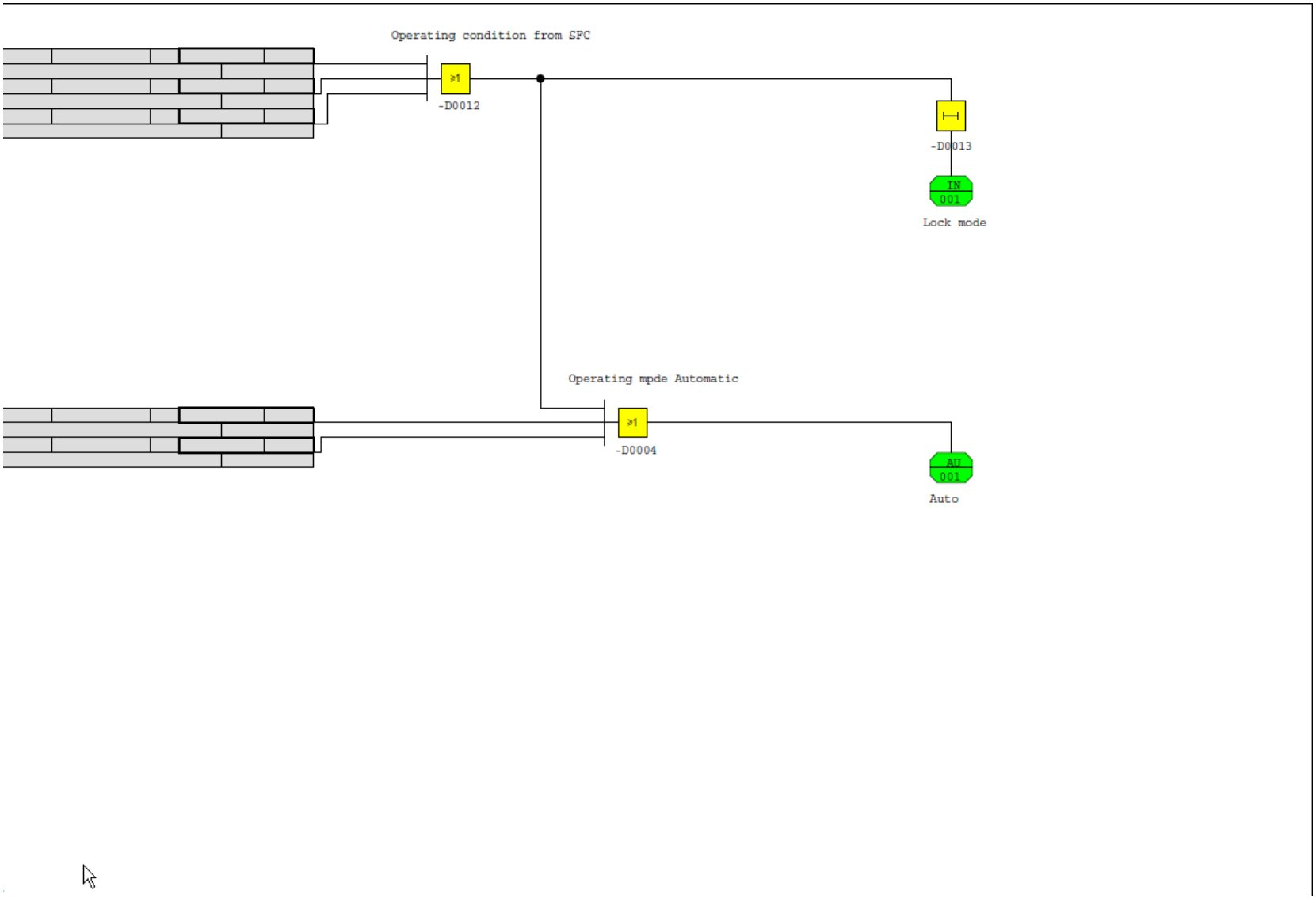

Figure 1.5 Function Template PC_BO_1 (Page 5/5)

1.4 Configurable Parameters

The following parameters are in the function diagram template and can be engineered using Excel sheet data mechanisms.

In general function block parameters and signals can be exported to Excel sheet and can be engineered and imported.

1.4.1 Function Blocks

The visible and not connected parameters in the function diagram template are in **Bold**.

PC_BO_1

Function Block	Input	Value	Data Type	Description
BSFUP_P	BIT	0	Bool	
DELAY-00	RS1	0	Bool	Reset
DELAY-00	RS2	0	Bool	Reset
DELAY-00	T1	0:00:02.000	Duration	Delay in starting
DELAY-00	T2	0:00:00.000	Duration	Drop delay
IDF1DOP-01	AUT	Connected	Bool	Automatic
IDF1DOP-01	E0	Connected	Bool	Feedback 0
IDF1DOP-01	E1	Connected	Bool	Feedback 1
IDF1DOP-01	FCUT	0	Bool	Disturbance switchoff
IDF1DOP-01	FINT	0	Bool	Disturbance intervention
IDF1DOP-01	I1	Connected	Bool	Input boolean
IDF1DOP-01	I2	Connected	Bool	Input boolean
IDF1DOP-01	I3	Connected	Bool	Input boolean
IDF1DOP-01	**I4**	**0**	**Bool**	**Input boolean**
IDF1DOP-01	IC0	Connected	Bool	Control 0
IDF1DOP-01	IC1	Connected	Bool	Control 1
IDF1DOP-01	INHI	Connected	Bool	Lock mode switchover
IDF1DOP-01	LINT	0	Bool	Local intervention
IDF1DOP-01	**MAN**	**0**	**Bool**	**Manual**
IDF1DOP-01	OPEX	00000000	**Packed Bool**	Boolean logic extern.
IDF1DOP-01	P0	Connected	Bool	Protection 0
IDF1DOP-01	**P1**	**0**	**Bool**	**Protection 1**
IDF1DOP-01	**PARA**	**00000074**	**Packed Bool**	**PBool**
IDF1DOP-01	**R0**	**1**	**Bool**	**Release 0**
IDF1DOP-01	R1	Connected	Bool	Release 1

Function Block	Input	Value	Data Type	Description
IDF1DOP-01	TEST	0	Bool	Test position
IDF1DOP-01	**TMO0**	**0:00:05.000**	**Duration**	**Monitoring time 0**
IDF1DOP-01	**TMO1**	**0:00:05.000**	**Duration**	**Monitoring time 1**

Table 1.4 Parameters of Function Block PC_BO_1

1.4.2 IO Modules

PC_BO_1

Function Block	Input	Value	Data Type	Description
BOUT1-00	SUV	0	Bool	Substitute value definition
BOUT1-00	SUV_ON	1	Bool	Substitute value on
BOUT1-00	T1IV	0:00:01.500	Duration	Del. time from INV to valid

Table 1.5 Parameters of IO Module PC_BO_1

1.4.3 Diagram Output References / Signal Parameters

PC_BO_1

Signal	Data Type	Value High	Value Low	Alarm Template	Archive Template
O01	BINARY	No Fault			
O01	BINARY	Protection 0	Release		
O02	BINARY	Protection 0	Release		
O03	BINARY	Control 1			
O04	BINARY	Control 0			
OAUT01	BINARY	Automatic			
OC1_01	BINARY	Control 1			
OCER01	BINARY	Fault			
OE0_01	BINARY	Feedback 0			
OE1_01	BINARY	Feedback 1			
OMAN01	BINARY	Manual			
STA01	PACKED	Status1		VM02	
STA02	PACKED	Status2			

Table 1.6 Signal Parameters of PC_BO_1

1.5 Additional Information

No additional information for this function module.

1.6 Performance of the function module in a fault scenario

In a fault scenario the module will generate an alarm/event and the function diagram output reference FAULT will be set to true.

2. Document References

Ref.	Document title	Document number
/1/	System 800xA PC Toolkit Library for Melody – Operation, User Manual	3BDA033439R5101EN
/2/	System 800xA PC Toolkit Library for Melody – Installation and Configuration, User Manual	3BDA033456R5103EN
/3/	S+ Engineering Function Blocks Operation	2VAA000580-530
/4/	S+ Control – Melody – Binary Output	2VAA000596-100
/5/	S+ Engineering: Function Blocks Analog / Binary	2VAA000571-530
/6/	S+ Engineering: Function Blocks Binary	2VAA000572-530
/7/	S+ Engineering: Function Blocks Actuator	2VAA000575-530

Table 2.1 References

3BDA033930R5101EN_FD_PC_BO_1 Germany Jul 2011

Copyright © 2011 by ABB. All Rights Reserved
® Registered Trademark of ABB.
™ Trademark of ABB.

BU Oil, Gas and Petrochemical
Frankfurt, Germany
www.abb.com/chemicals