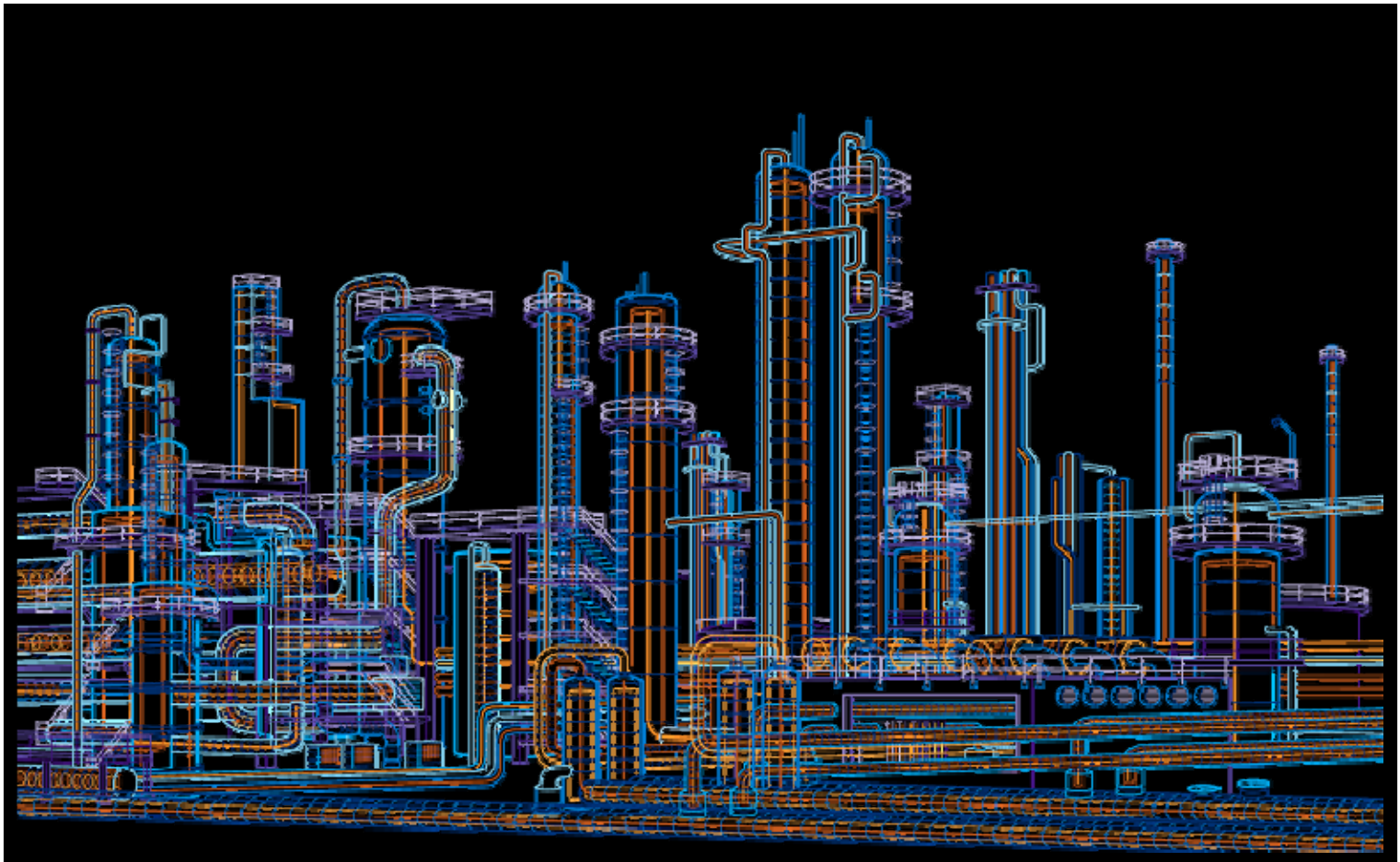

System 800xA
PC Toolkit Library for Melody
Function Diagram Template - PC_AO_1
User Manual

System Version 5.1

Power and productivity
for a better world™

Purpose

The purpose of this document is to describe the features and functionality of the function diagram template for an analog output. This document will define the ABB Control System standards for the implementation of the Toolkit specification to be adopted across all sites and on all plants.

Conditions

The System Extension supports System 800xA System Version 5.1 or higher.

Notice

This document contains information about one or more ABB products and may include a description of or a reference to one or more standards that may be generally relevant to the ABB products. The presence of any such description of a standard or reference to a standard is not a representation that all of the ABB products referenced in this document support all of the features of the described or referenced standard.

This document and parts thereof must not be reproduced or copied without written permission from ABB, and the contents thereof must not be imparted to a third party nor used for any unauthorized purpose.

Trademarks

All rights to copyrights, registered trademarks, and trademarks reside with their respective owners.

Copyright © 2011 by ABB.

All rights reserved.

Release: 2011-06-30

Document Number: 3BDA033930R5101EN_FD_PC_AO_1

Table of contents

1. Function 4
1.1 General Functional Description 4
1.2 Used Blocks 4
1.2.1 Function Blocks 4
1.2.2 Diagram Output References 4
1.2.3 I/O Modules 4
1.2.4 Diagram Input References 4
1.3 Function Template 5
1.4 Configurable Parameters 6
1.4.1 Function Blocks 6
1.4.2 IO Modules 7
1.4.3 Diagram Output References / Signal Parameters 7
1.5 Additional Information 8
1.6 Performance of the function in a fault scenario 8
2. Document References 8

1. Function

1.1 General Functional Description

The function diagram template PC_AO_1 serves to display, control and monitor a continuous signal output. The output signal can be transmitted to a hardwired analog output module (e.g. 4-20mA) or to an analog software output. When a fault of the analog output (only when using hardware output) is detected in the system a module-fault message is generated and made available as an output signal at the module.

The Analog Output Module is comparable to the Controller Module in the "Actuating" function. The template covers the following main functionality:

- Display of the value in the faceplate within its measuring range and engineering units.

1.2 Used Blocks

1.2.1 Function Blocks

Function Block	Name	Library	Description
YL-00	PC_AO_1	Analog	Major analog control function Real Function Block description see /7/ Operation description see /1/
OR-B0	PC_AO_1	Binary	OR Boolean
SWTV1-R0	PC_AO_1	Analog/Binary	Changeover switch Real

Table 1.1 Function Blocks

1.2.2 Diagram Output References

Signal	Data Type	Description
XSTA01	PACKED	Analog Output module basic
Y01	ANALOG	Analog Output module basic

Table 1.2 Function diagram Output References

1.2.3 I/O Modules

Function Block	Name	Library	Description
AOEX-00	PC_AO_1	I/O	HW -Out analog Ex (CAO10Ex) standard

Table 1.3 I/O Modules

1.2.4 Diagram Input References

The diagram input references are not connected in this function diagram template.

1.3 Function Template

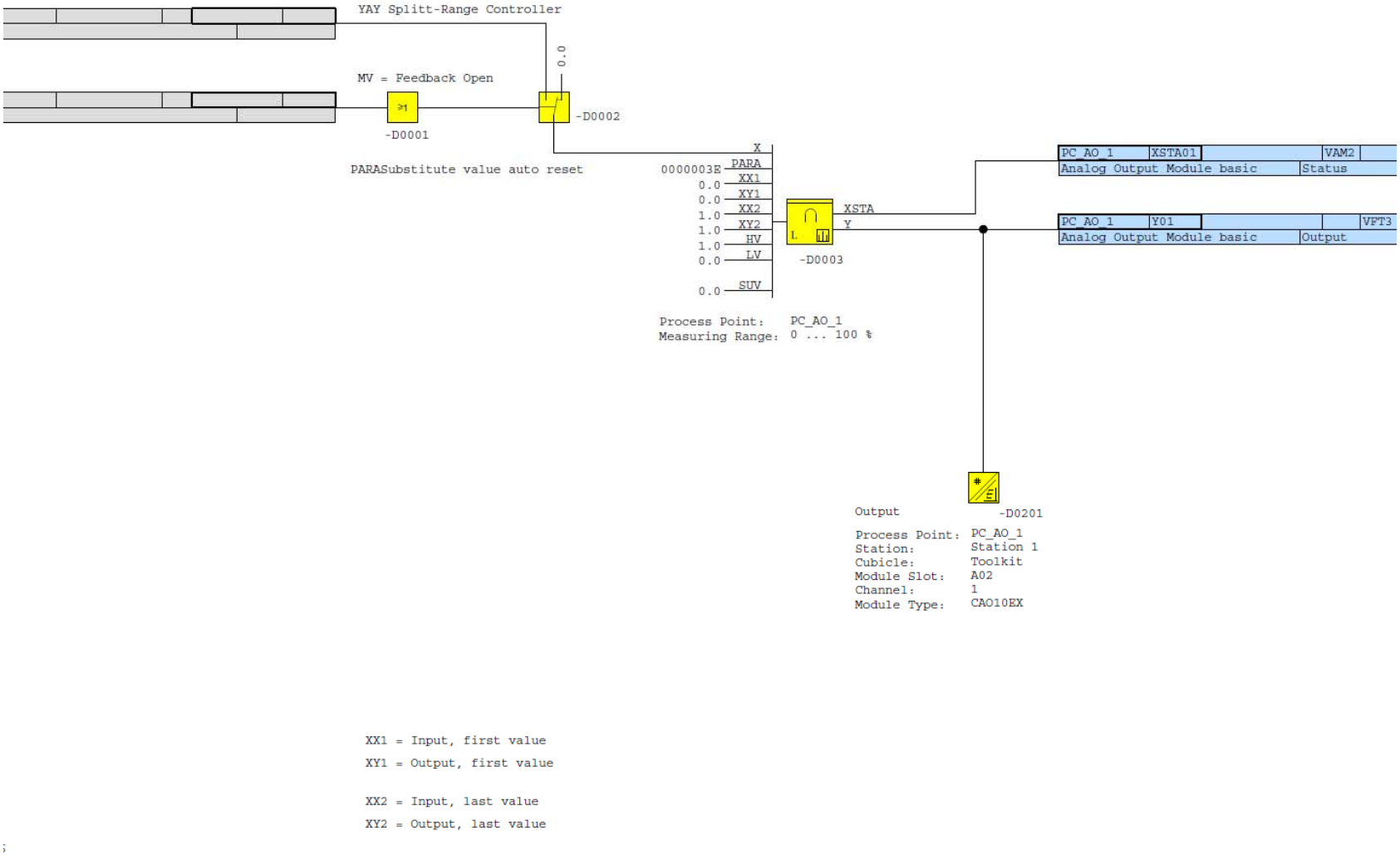

Figure 1.1 Function Template PC_AO_1

1.4 Configurable Parameters

The following parameters are in the function diagram template and can be engineered using Excel sheet data mechanisms.

In general function block parameters and signals can be exported to Excel sheet and can be engineered and imported.

1.4.1 Function Blocks

The visible and not connected parameters in the function diagram template are in **Bold**.

PC_AO_1

Function Block	Input	Value	Data Type	Description
YL-00	X	Connected	Real	Input real
SWTV1-R0	X1	0.0	Real	Input real
YL-00	AHB	0.01	Real	H-limit hysteresis
YL-00	AHD	0	Bool	Disable H-limit
YL-00	AHHB	0.01	Real	HH-limit hysteresis
YL-00	AHHD	0	Bool	Disable HH-limit
YL-00	AHHS	0	Bool	HH-limit message suppr.
YL-00	AHHV	0.9	Real	HH-limit value
YL-00	AHS	0	Bool	H-limit message suppr.
YL-00	AHV	0.8	Real	H-limit value
YL-00	AKI	0	Bool I	External access lock
YL-00	ALB	0.01	Real	L-limit hysteresis
YL-00	ALD	0	Bool	Disable L-limit
YL-00	ALLB	0.01	Real	LL-limit hysteresis
YL-00	ALLD	0	Bool	Disable LL-limit
YL-00	ALLS	0	Bool	LL-limit message suppr.
YL-00	ALLV	0.1	Real	LL-limit value
YL-00	ALS	0	Bool	L-limit message suppr.
YL-00	ALV	0.2	Real	L-limit value
YL-00	ATV	0.0	Real	Alternative value
YL-00	BRT	0:00:00.000	Duration	Switchov. filter time const.
YL-00	C1	0.0	Real	Offset
YL-00	**HV**	**1.0**	**Real**	**H-limit reached**
YL-00	IV	0	Bool	Invalid
YL-00	K1	1.0	Real	Weighting factor K

Function Block	Input	Value	Data Type	Description
YL-00	**LV**	**0.0**	**Real**	**L-limit**
YL-00	MDO	00000000	Packed Bool	Oper. word operation
YL-00	**PARA**	**0000003E**	**Packed Bool**	**PBool**
YL-00	**SUV**	**0.0**	**Real**	**Substitute value**
YL-00	**XX1**	**0.0**	**Real**	**Coordinate X**
YL-00	**XX2**	**1.0**	**Real**	**Coordinate X**
YL-00	**XY1**	**0.0**	**Real**	**Coordinate Y**
YL-00	**XY2**	**1.0**	**Real**	**Coordinate Y**

Table 1.4 Parameters of Function Block PC_AO_1

1.4.2 IO Modules

PC_AO_1

Function Block	Input	Value	Data Type	Description
AOEX-00	CY1	0	Bool	Falling characteristic
AOEX-00	EBMO	1	Bool	Elec. burden monitoring
AOEX-00	LZ	1	Bool	Live Zero
AOEX-00	SUV	0.0	Real	Substitute value definition
AOEX-00	SUV_LAV	0	Bool	Keep last value
AOEX-00	SUV_ON	0	Bool	Substitute value on

Table 1.5 Parameters of IO Module PC_AO_1

1.4.3 Diagram Output References / Signal Parameters

PC_AO_1

Signal	Data Type	Value High	Value Low	Alarm Template	Archive Template
XSTA01	PACKED	Status		VAM2	
Y01	ANALOG	Output			Fast_7d

Table 1.6 Signal Parameters of PC_AO_1

1.5 Additional Information

- The substitute value strategy is realized in the function block using the input “PARA” (hold last valid value or substitute value with auto reset).
- In addition to them an alternative value can be activated independent from the invalidity status of the function.
- In the input configuration of “X” and in the tab quality a substitute value (actual value or a fixed value) can be defined.

1.6 Performance of the function in a fault scenario

No fault scenario in the module will generate.

2. Document References

Ref.	Document title	Document number
/1/	System 800xA PC Toolkit Library for Melody – Operation, User Manual	3BDA033439R5101EN
/2/	System 800xA PC Toolkit Library for Melody – Installation and Configuration, User Manual	3BDA033456R5103EN
/3/	S+ Engineering Function Blocks Operation	2VAA000580-530
/4/	S+ Control – Melody – Analog Output	2VAA000594-100
/5/	S+ Engineering: Function Blocks Analog / Binary	2VAA000571-530
/6/	S+ Engineering: Function Blocks Binary	2VAA000572-530
/7/	S+ Engineering: Function Blocks Analog	2VAA000570-530

Table 2.1 References

3BDA033930R5101EN_FD_PC_AO_1 Germany Jul 2011

Copyright © 2011 by ABB. All Rights Reserved
® Registered Trademark of ABB.
™ Trademark of ABB.

BU Oil, Gas and Petrochemical
Frankfurt, Germany
www.abb.com/chemicals