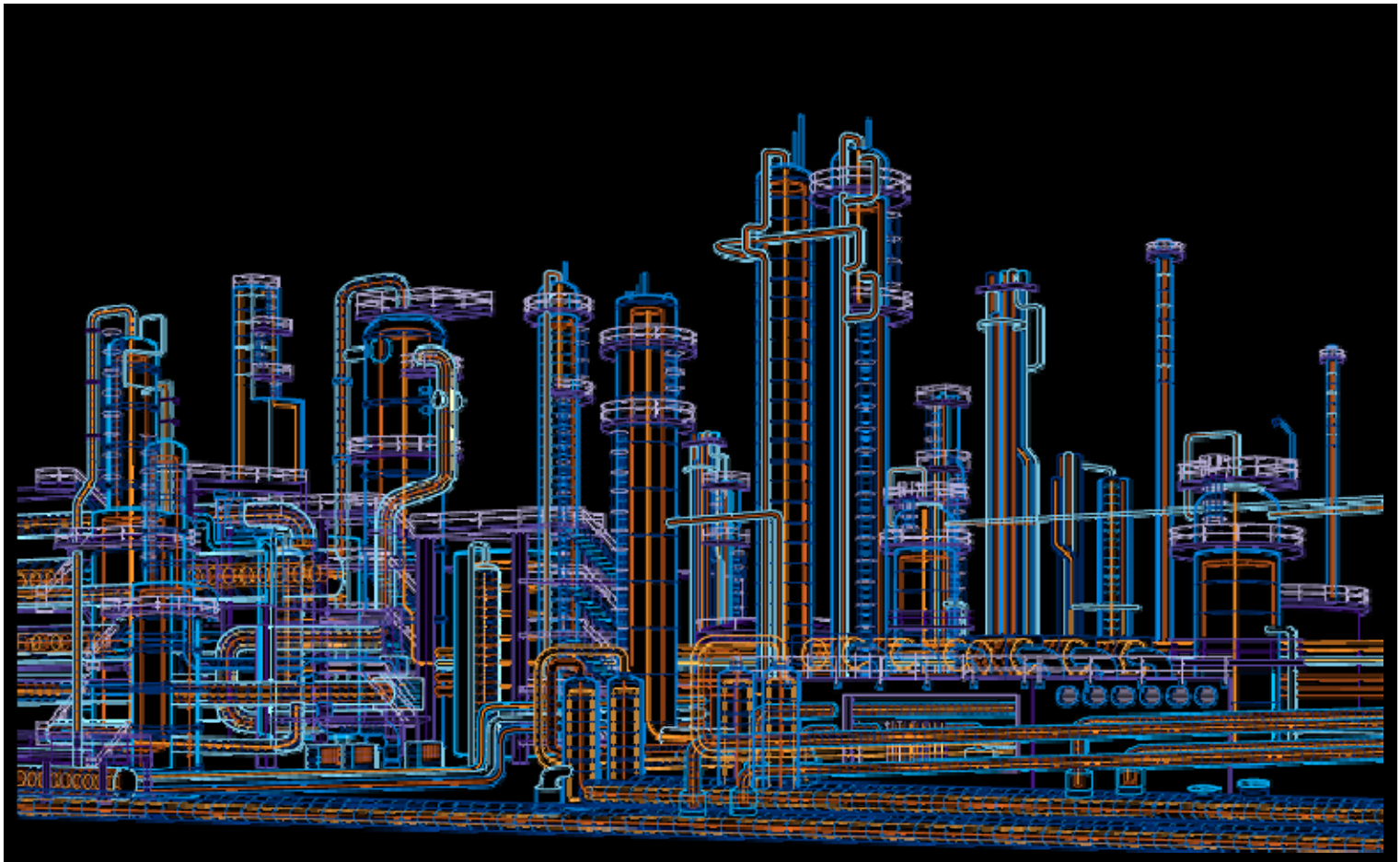

System 800xA
PC Toolkit Library for Melody
Function Diagram Template - PC_AO_2
User Manual

System Version 5.1

Power and productivity
for a better world™

Purpose

The purpose of this document is to describe the features and functionality of the function diagram template for an analog output. This document will define the ABB Control System standards for the implementation of the Toolkit specification to be adopted across all sites and on all plants.

Conditions

The System Extension supports System 800xA System Version 5.1 or higher.

Notice

This document contains information about one or more ABB products and may include a description of or a reference to one or more standards that may be generally relevant to the ABB products. The presence of any such description of a standard or reference to a standard is not a representation that all of the ABB products referenced in this document support all of the features of the described or referenced standard.

This document and parts thereof must not be reproduced or copied without written permission from ABB, and the contents thereof must not be imparted to a third party nor used for any unauthorized purpose.

Trademarks

All rights to copyrights, registered trademarks, and trademarks reside with their respective owners.

Copyright © 2011 by ABB.

All rights reserved.

Release: 2011-06-30

Document Number: 3BDA033930R5101EN_FD_PC_AO_2

Table of contents

1. Function 4
1.1 General Functional Description 4
1.2 Used Blocks 4
1.2.1 Function Blocks 4
1.2.2 Diagram Output References 4
1.2.3 I/O Modules 5
1.2.4 Diagram Input References 5
1.3 Function Template 6
1.4 Configurable Parameters 8
1.4.1 Function Blocks 8
1.4.2 IO Modules 12
1.4.3 Diagram Output References / Signal Parameters 12
1.5 Additional Information 13
1.6 Performance of the function in a fault scenario 13
2. Document References 14

1. Function

1.1 General Functional Description

The function diagram template PC_AO_1 serves to display, control and monitor a continuous signal output. The output signal can be transmitted to a hardwired analog output module (e.g. 4-20mA) or to an analog software output. When a fault of the analog output (only when using hardware output) is detected in the system a module-fault message is generated and made available as an output signal at the module.

The Analog Output Module is comparable to the Controller Module in the "Actuating" function. The template covers the following main functionality:

- Display of the value in the faceplate within its measuring range and engineering units.
- The output value can result from the faceplate, from the logic in automatic mode.

1.2 Used Blocks

1.2.1 Function Blocks

Function Block	Name	Library	Description
APIDM-01	PC_AO_2	CLC	Controller function Medium Function Block description see /7/ Operation description see /1/
OR-B0	PC_AO_2	Binary	OR Boolean
LWR-R0	PC_AO_2	Analog/Binary	Write value with enable Real
LWRNV-R0	PC_AO_2	Analog/Binary	Write value with enable Real
DELAY-00	PC_AO_2	Binary	Delay Boolean
ADD-R0	PC_AO_2	Binary	Adder Real
GT-R0	PC_AO_2	Analog/Binary	Analog comparator A>B Real
LE-R0	PC_AO_2	Analog/Binary	Analog comparator A<B Real
CONPSRC	PC_AO_2	Connectors	Connector source
CONPSNK	PC_AO_2	Connectors	Connector sink

Table 1.1 Function Blocks

1.2.2 Diagram Output References

Signal	Data Type	Description
O14	BINARY	Analog Output module mode
O15	BINARY	Analog Output module mode
O17	BINARY	Analog Output module mode
O18	BINARY	Analog Output module mode

	Data Type	Description
TSTA01	PACKED	Analog Output module mode
WAY01	ANALOG	Analog Output module mode
WSTA01	PACKED	Analog Output module mode
XAY01	ANALOG	Analog Output module mode
XSTA01	PACKED	Analog Output module mode
YAY01	ANALOG	Analog Output module mode
YSTA01	PACKED	Analog Output module mode

Table 1.2 Function diagram Output References

1.2.3 I/O Modules

Function Block	Name	Library	Description
AOEX-00	PC_AO_2	I/O	HW -Out analog Ex (CAO10Ex) standard

Table 1.3 I/O Modules

1.2.4 Diagram Input References

The diagram input references are connected internal and not connected for external connection in this function diagram template.

1.3 Function Template

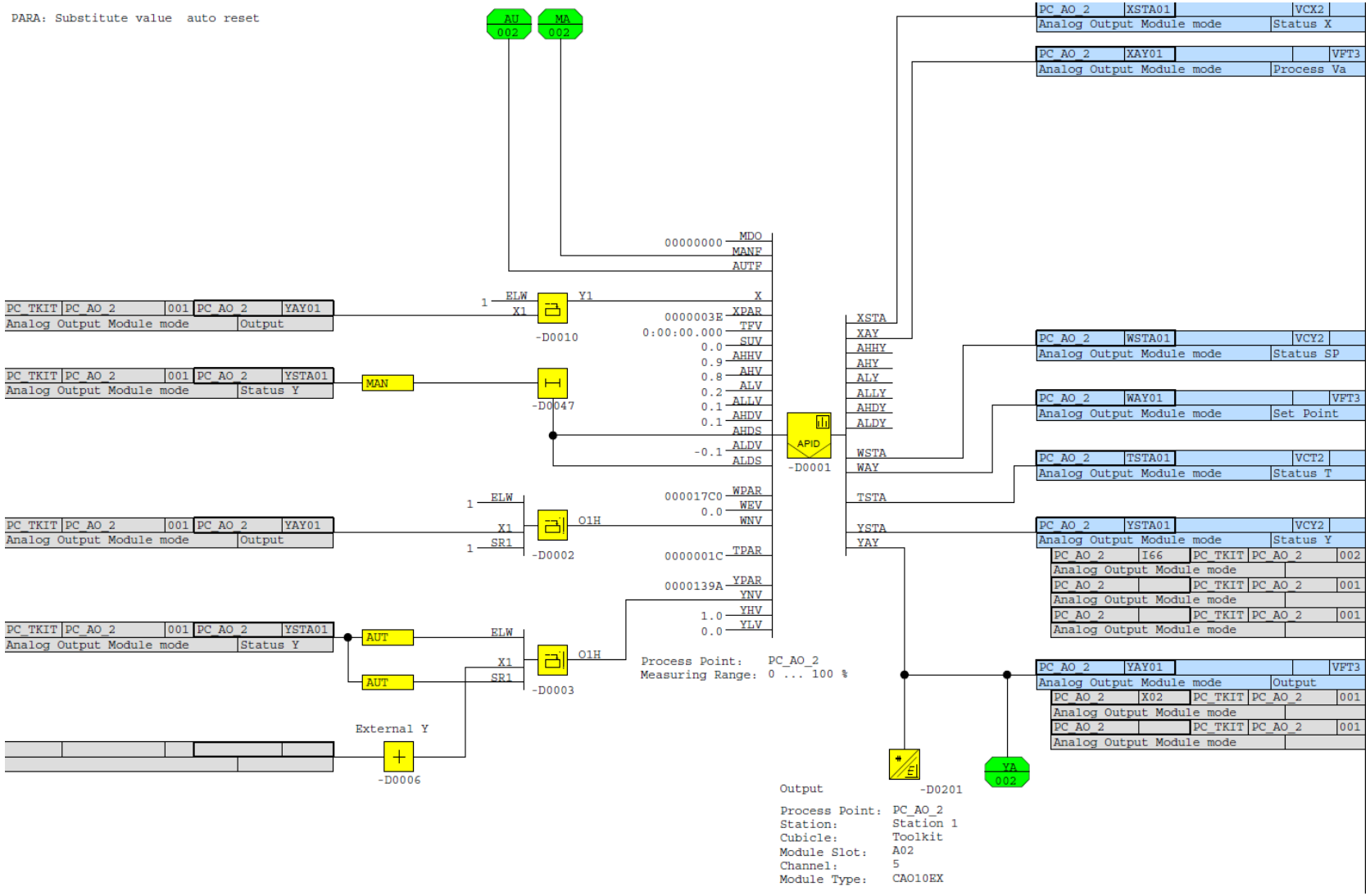

Figure 1.1 Function Template PC_AO_2 (Page 1/2)

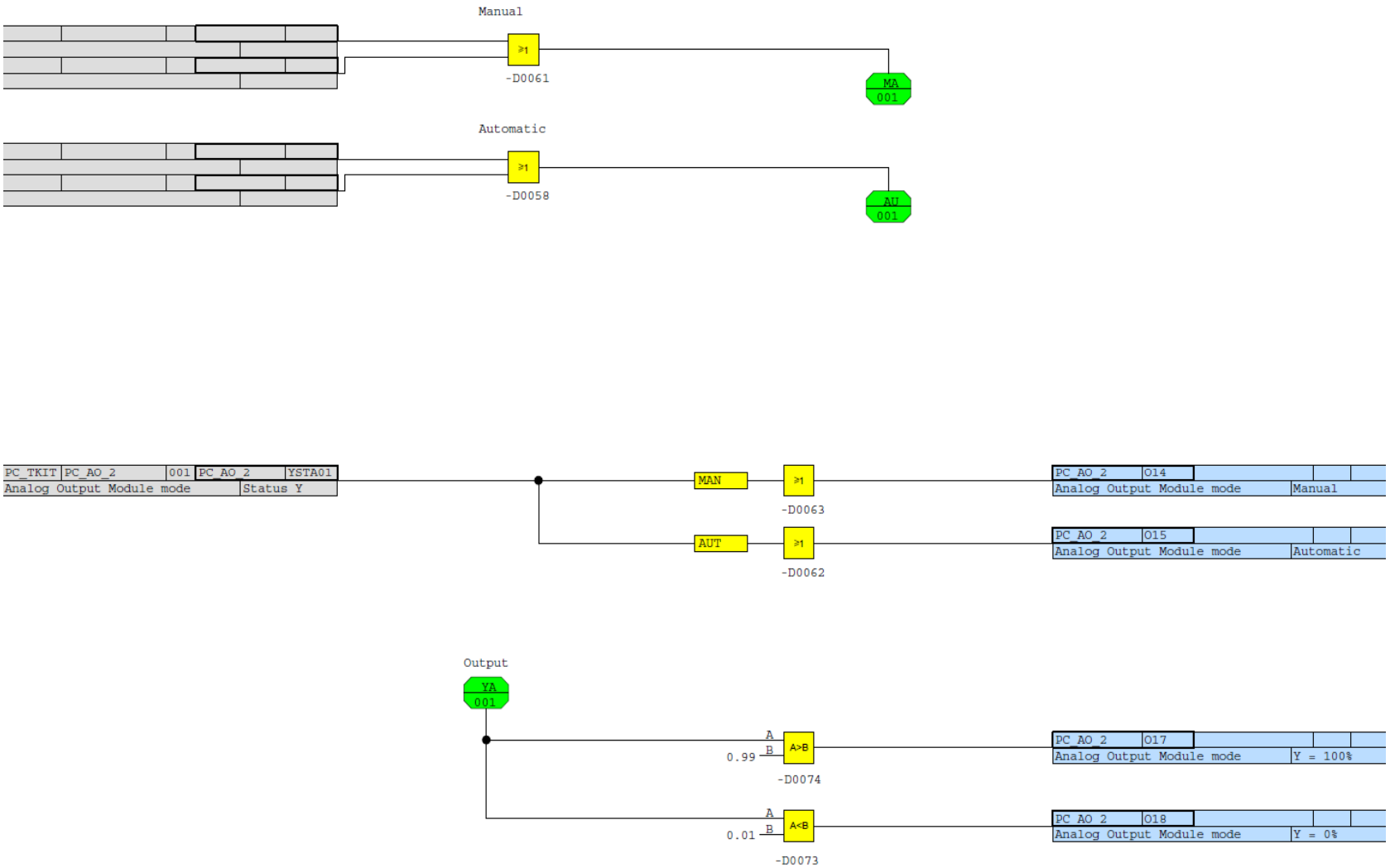

Figure 1.2 Function Template PC_AO_2 (Page 2/2)

1.4 Configurable Parameters

The following parameters are in the function diagram template and can be engineered using Excel sheet data mechanisms.

In general function block parameters and signals can be exported to Excel sheet and can be engineered and imported.

1.4.1 Function Blocks

The visible and not connected parameters in the function diagram template are in **Bold**.

PC_AO_2

Function Block	Input	Value	Data Type	Description
APIDM-01	X		Real	Input real
APIDM-01	AHB	0.01	Real	H-limit hysteresis
APIDM-01	AHD	0	Bool	Disable H-limit
APIDM-01	AHDB	0.01	Real	H-tolerance hysteresis
APIDM-01	AHDD	0	Bool	Disable H-tolerance limit
APIDM-01	**AHDV**	**0.1**	**Real**	**H-tolerance value**
APIDM-01	AHHB	0.01	Real	HH-limit hysteresis
APIDM-01	AHHD	0	Bool	Disable HH-limit
APIDM-01	AHHS	0	Bool	HH-limit message suppr.
APIDM-01	**AHHV**	**0.9**	**Real**	**HH-limit value**
APIDM-01	AHS	0	Bool	H-limit message suppr.
APIDM-01	**AHV**	**0.8**	**Real**	**H-limit value**
APIDM-01	AII	0	Bool	Interlock AUT
APIDM-01	AKFR	0	Bool	Reset access lock
APIDM-01	AKFS	0	Bool	Set access lock
APIDM-01	ALB	0.01	Real	L-limit hysteresis
APIDM-01	ALD	0	Bool	Disable L-limit
APIDM-01	ALDB	0.01	Real	L-tolerance hysteresis
APIDM-01	ALDD	0	Bool	Disable L-tolerance limit
APIDM-01	**ALDV**	**-0.1**	**Real**	**L-tolerance value**
APIDM-01	ALLB	0.01	Real	LL-limit hysteresis
APIDM-01	ALLD	0	Bool	Disable LL-limit
APIDM-01	ALLS	0	Bool	LL-limit message suppr.
APIDM-01	**ALLV**	**0.1**	**Bool**	**LL-limit value**
APIDM-01	ALS	0	Bool	L-limit message suppr.

Function Block	Input	Value	Data Type	Description
APIDM-01	**ALV**	**0.2**	**Real**	**L-limit value**
APIDM-01	ARB	1.0	Real	End position ARW band
APIDM-01	ARN	0	Bool	End position I-behaviour
APIDM-01	ATV	0.670166	Real	Alternative value
APIDM-01	AUTF		Bool	Mode of operation AUT
APIDM-01	BIP1	00000000	Packed Bool	Balancing request from slave
APIDM-01	BRT	0:00:10.000	Duration	Switchov. filter time const.
APIDM-01	BT	0:00:10.000	Duration	Sync. value transient time
APIDM-01	C1	0.0	real	Offset
APIDM-01	CII	0	Bool	Interlock DDC
APIDM-01	COMF	0	Bool	Mode of operation DDC
APIDM-01	COMH	0	Bool	DDC error-free
APIDM-01	COMV	00000000	LVR	Computer value
APIDM-01	CUT	0.05	Real	Threshold square root extr.
APIDM-01	DBV	0.0	Real	Dead band value
APIDM-01	DDN	0	Bool	D-ratio dead band off
APIDM-01	DIN	0	Bool	I-ratio dead band off
APIDM-01	DN-	1	Bool	D-ratio switchoff minus
APIDM-01	DN+	1	Bool	D-ratio switchoff plus
APIDM-01	DPN	0	Bool	P-ratio dead band off
APIDM-01	EII	0	Bool	Interlock EXT
APIDM-01	EXTF	0	Bool	Mode of operation EXT
APIDM-01	III	0	Bool	Interlock INT
APIDM-01	IN-	0	Bool	I-ratio switchoff minus
APIDM-01	IN+	0	Bool	I-ratio switchoff plus
APIDM-01	INTF	0	Bool	Mode of operation INT
APIDM-01	IV	0	Real	Invalid
APIDM-01	K1	1.0	Real	Weighting factor K
APIDM-01	KCN	0	Bool	Switchoff compens. Kp change
APIDM-01	KP	1.0	Real	Proportional gain
APIDM-01	LKFR	0	Bool	Interl. mode switchov. reset
APIDM-01	LKFS	0	Bool	Interl. mode switchov. set
APIDM-01	LOCI	0	Bool	Local intervention
APIDM-01	LOCV	0.0	Real	Local intervention value
APIDM-01	MANF		Bool	Mode of operation MAN

Function Block	Input	Value	Data Type	Description
APIDM-01	**MDO**	**00000000**	**Packed Bool**	**Oper. word operation**
APIDM-01	MII	0	Bool	Interlock MAN
APIDM-01	OVT1	1	Bool	Override type for signal n
APIDM-01	OVTI	0	Bool	Override type slave contr.
APIDM-01	OVV1	-1.0	real	Override signal n
APIDM-01	PN	0	Bool	Switchoff P-ratio
APIDM-01	**SUV**	**0.0**	**Real**	**Substitute value**
APIDM-01	TD	0:00:00.000	Duration	Decay time
APIDM-01	TFB	2.0	Real	Linear range NIFIL
APIDM-01	**TFV**	**0:00:00.000**	**Duration**	**Filter time constant**
APIDM-01	TI	0:01:00.000	Duration	Integration time
APIDM-01	**TPAR**	**0000001C**	**Packed Bool**	**Parameter setting time func.**
APIDM-01	TRT	0:00:05.000	Duration	Transient reset delay
APIDM-01	TRV	2.0	Real	Transient value
APIDM-01	VD	2.0	Real	Derivative gain
APIDM-01	WAC1	0.0	Real	Aux. variable offset
APIDM-01	WAF1	0	Integer	Selection comp. function
APIDM-01	WAK1	1.0	Real	Aux. variable gain
APIDM-01	WAX1	0.0	Real	Input aux. variable
APIDM-01	WBN	0	Bool	Disable limitation for W
APIDM-01	WCV	0.0	Real	Offset set point Wext.
APIDM-01	WET	0:00:10.000	Duration	Time for bump sm. filter
APIDM-01	**WEV**	**0.0**	**Real**	**External set point**
APIDM-01	WHN	0	Bool	Disable H-limit
APIDM-01	WHV	1.0	Real	H-limit value
APIDM-01	WHVS	1.0	Real	H-limit standard
APIDM-01	WKC	0.0	Real	Offset ratio for Wext.
APIDM-01	WKHV	1.05	Real	H-limit ratio
APIDM-01	WKK	1.0	Real	Gain for ratio
APIDM-01	WKLV	-0.05	Real	L-limit ratio
APIDM-01	WKV	1.0	Real	Ratio value for Wext.
APIDM-01	WLN	0	Bool	Disable L-limit
APIDM-01	WLV	0.0	Real	L-limit value
APIDM-01	WLVS	0.0	Real	L-limit standard
APIDM-01	WN-	0	Bool	Stop minus direction

Function Block	Input	Value	Data Type	Description
APIDM-01	WN+	0	Bool	Stop plus direction
APIDM-01	WNH	0	Bool	Hold last value
APIDM-01	WNV	00000000	LVR	Set point control
APIDM-01	WOV	0.0666667	Real	Set point operator
APIDM-01	**WPAR**	**000017C0**	**Packed Bool**	**Parameter setting W-function**
APIDM-01	WRN	0	Bool	Disable gradient limitation
APIDM-01	WRT-	0:00:00.000	Duration	Value gradient limit. minus
APIDM-01	WRT+	0:00:00.000	Duration	Value gradient limit. plus
APIDM-01	**XPAR**	**0000003E**	**Packed Bool**	**Parameter setting X-function**
APIDM-01	XX1	1.0	Real	Coordinate X
APIDM-01	XY1	1.0	Real	Coordinate Y
APIDM-01	YAC1	0.0	Real	Aux. variable offset
APIDM-01	YAF1	0	Integer	Selection comp. function
APIDM-01	YAK1	1.0	Real	Aux. variable gain
APIDM-01	YAX1	0.0	Real	Input aux. variable
APIDM-01	YBN	0	Bool	Disable limitation for Y
APIDM-01	YCRD	0	Bool	Selection start value 100 %
APIDM-01	YFSS	0	Bool	Forced switch-off
APIDM-01	YFSV	0.0	Real	Value for forced switch-off
APIDM-01	YHN	0	Bool	Disable H-limit
APIDM-01	**YHV**	**1.0**	**Real**	**H-limit value**
APIDM-01	YHVS	1.0	Real	H-limit standard
APIDM-01	YLN	0	Bool	Disable L-limit
APIDM-01	**YLV**	**0.0**	**Real**	**L-limit value**
APIDM-01	YLVS	0.0	Real	L-limit standard
APIDM-01	YN-	0	Bool	Stop minus direction
APIDM-01	YN+	0	Bool	Stop plus direction
APIDM-01	YN-1	0.0	Real	Yn-1
APIDM-01	YNH	0	Bool	Y hold last value
APIDM-01	YNV	00000000	LVR	Y substitute value extern
APIDM-01	YOV	0.0	Real	Positioning variable oper.
APIDM-01	**YPAR**	**0000139A**	**Packed Bool**	**Parameter setting Y-function**
BSFUP_P	BIT	3	Bool	
BSFUP_P	BIT	3	Bool	
BSFUP_P	BIT	2	Bool	

Function Block	Input	Value	Data Type	Description
BSFUP_P	BIT	2	Bool	
BSFUP_P	BIT	3	Bool	
DELAY-00	RS1	0	Bool	Reset
DELAY-00	RS2	0	Bool	Reset
DELAY-00	T1	0:00:00.000	Duration	Delay in starting
DELAY-00	T2	0:00:00.000	Duration	Drop delay
GT-R0	**B**	**0.99**	**Real**	**Input real**
LE-R0	**B**	**0.01**	**Real**	**Input real**
LWRNV-R0	**ELW**	**1**	**Bool**	**Write**
LWRNV-R0	PARA	00000001	Packed Bool	PBool
LWRNV-R0	PARA	00000001	Packed Bool	PBool
LWRNV-R0	**SR1**	**1**	**Bool**	**Set/reset**
LWR-R0	**ELW**	**1**	**Bool**	**Write**
LWR-R0	PARA	00000000	Packed Bool	PBool

Table 1.4 Parameters of Function Block PC_AO_2

1.4.2 IO Modules

PC_AO_2

Function Block	Input	Value	Data Type	Description
AOEX-00	CY1	0	Bool	Falling characteristic
AOEX-00	EBMO	1	Bool	Elec. burden monitoring
AOEX-00	LZ	1	Bool	Live Zero
AOEX-00	SUV	0.0	Real	Substitute value definition
AOEX-00	SUV_LAV	0	Bool	Keep last value
AOEX-00	SUV_ON	0	Bool	Substitute value on

Table 1.5 Parameters of IO Module PC_AO_2

1.4.3 Diagram Output References / Signal Parameters

PC_AO_2

Signal	Data Type	Value High	Value Low	Alarm Template	Archive Template
O14	BINARY	Manual			
O15	BINARY	Automatic			
O17	BINARY	Y = 100%			

Signal	Data Type	Value High	Value Low	Alarm Template	Archive Template
O18	BINARY	Y = 0%			
TSTA01	PACKED	Status T		VCT2	
WAY01	ANALOG	Set Point			Fast_7d
WSTA01	PACKED	Status SP		VCY2	
XAY01	ANALOG	Process Va			Fast_7d
XSTA01	PACKED	Status X		VCX2	
YAY01	ANALOG	Output			Fast_7d
YSTA01	PACKED	Status Y		VCY2	

Table 1.6 Signal Parameters of PC_AO_2

1.5 Additional Information

- The substitute value strategy is realized in the function block using the input “PARA” (hold last valid value or substitute value with auto reset).
- In addition to them an alternative value can be activated independent from the invalidity status of the function.
- In the input configuration of “X” and in the tab quality a substitute value (actual value or a fixed value) can be defined.

1.6 Performance of the function in a fault scenario

No fault scenario in the module will generate.

2. Document References

Ref.	Document title	Document number
/1/	System 800xA PC Toolkit Library for Melody – Operation, User Manual	3BDA033439R5101EN
/2/	System 800xA PC Toolkit Library for Melody – Installation and Configuration, User Manual	3BDA033456R5103EN
/3/	S+ Engineering Function Blocks Operation	2VAA000580-530
/4/	S+ Control – Melody – Analog Output	2VAA000594-100
/5/	S+ Engineering: Function Blocks Analog / Binary	2VAA000571-530
/6/	S+ Engineering: Function Blocks Binary	2VAA000572-530
/7/	S+ Engineering: Function Block APID	2VAA000575-530

Table 2.1 References

3BDA033930R5101EN_FD_PC_AO_2 Germany Jul 2011

Copyright © 2011 by ABB. All Rights Reserved
® Registered Trademark of ABB.
™ Trademark of ABB.

BU Oil, Gas and Petrochemical
Frankfurt, Germany
www.abb.com/chemicals