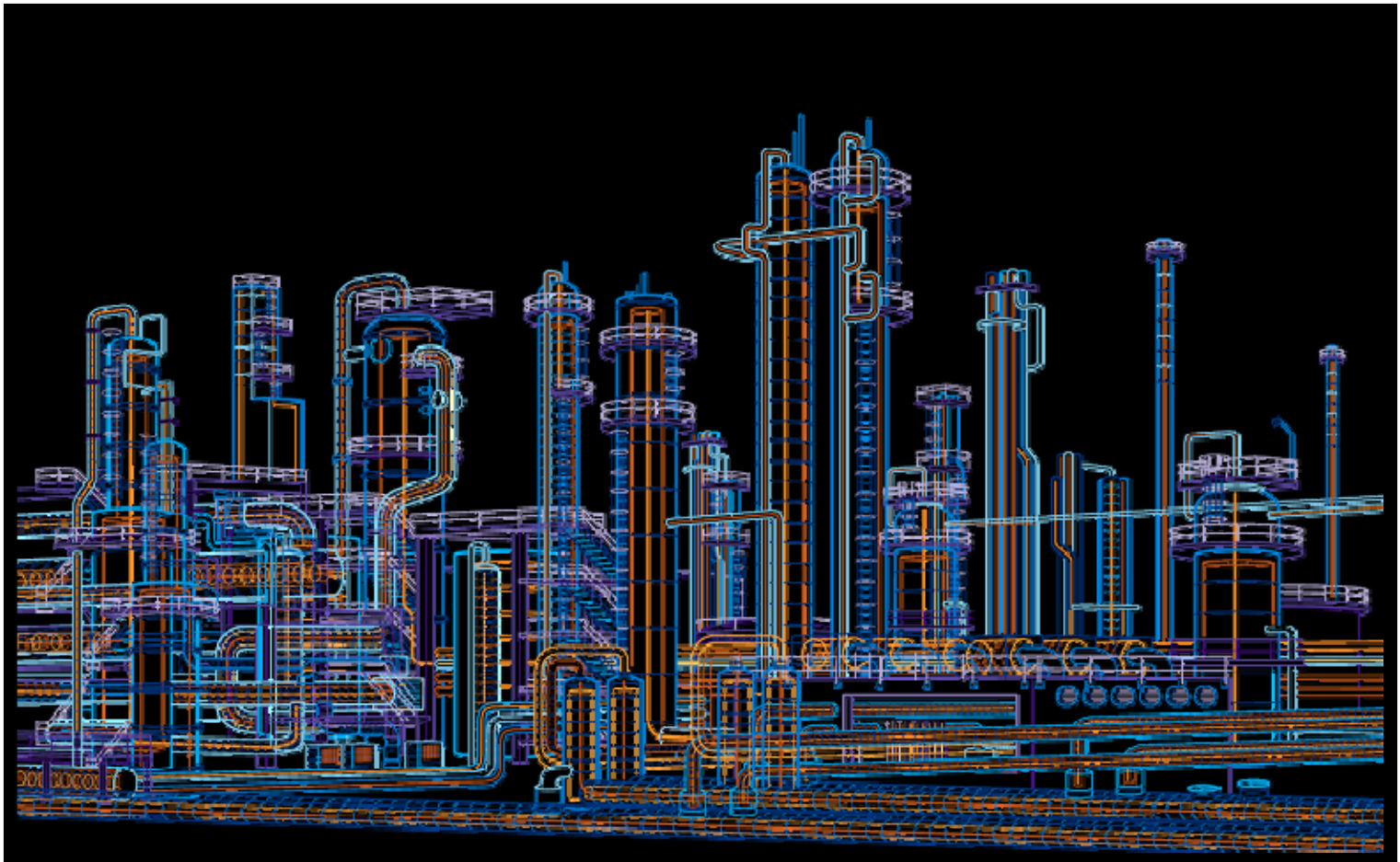

System 800xA
PC Toolkit Library for Melody
Function Diagram Template - PC_S88_SFC
User Manual

System Version 5.1

Power and productivity
for a better world™

Purpose

The purpose of this document is to describe the features and functionality of the function diagram template for a sequential functional chart with up to five sequence chains for batch. This document will define the ABB Control System standards for the implementation of the Toolkit specification to be adopted across all sites and on all plants.

Conditions

The System Extension supports System 800xA System Version 5.1 or higher.

Notice

This document contains information about one or more ABB products and may include a description of or a reference to one or more standards that may be generally relevant to the ABB products. The presence of any such description of a standard or reference to a standard is not a representation that all of the ABB products referenced in this document support all of the features of the described or referenced standard.

This document and parts thereof must not be reproduced or copied without written permission from ABB, and the contents thereof must not be imparted to a third party nor used for any unauthorized purpose.

Trademarks

All rights to copyrights, registered trademarks, and trademarks reside with their respective owners.

Copyright © 2011 by ABB.

All rights reserved.

Release: 2011-06-30

Document Number: 3BDA033930R5101EN_FD_PC_S88_SFC

Table of contents

1. Function 4
1.1 General Functional Description 4
1.2 Used Blocks 4
1.2.1 Function Blocks 4
1.2.2 Diagram Output References 5
1.2.3 I/O Modules 6
1.2.4 Diagram Input References 6
1.3 Function Template 7
1.4 Configurable Parameters 13
1.4.1 Function Blocks 13
1.4.2 Diagram Output References / Signal parameters 20
1.5 Additional Information 22
1.6 Performance of the function module in a fault scenario 22
2. Document References 23

1. Function

1.1 General Functional Description

The function diagram template PC_S88_SFC realizes a sequential functional chart with

- Running sequence
- Hold sequence
- Stop sequence
- Abort sequence
- Restart sequence

1.2 Used Blocks

1.2.1 Function Blocks

Function Block	Name	Library	Description
SC2-10	PC_S88_SFC		Sequence control double branch Phase Function Block description see /6/ Operation description see /1/
BSFUP_P	PC_S88_SFC		Bitselect function diagram
AND-B0	PC_S88_SFC	Binary	AND Boolean
OR-B0	PC_S88_SFC	Binary	OR Boolean
DYNOR-00	PC_S88_SFC	Binary	OR dynamic Boolean
EQ-I0	PC_S88_SFC	Analog/Binary	Analog comparator A=B Integer
MFLOP-B0	PC_S88_SFC	Binary	MonoFlop Boolean
DELAY-00	PC_S88_SFC	Binary	Delay Boolean
BFLAG-R0	PC_S88_SFC	Analog/Binary	Flag with O&M Real
BFLAG-I0	PC_S88_SFC	Analog/Binary	Flag with O&M Integer
LWR-R0	PC_S88_SFC	Analog/Binary	Write value with enable Real
LWR-I0	PC_S88_SFC	Analog/Binary	Write value with enable Integer
CONPSRC	PC_S88_SFC	Connectors	Connector source
CONPSNK	PC_S88_SFC	Connectors	Connector sink

Table 1.1 Function Blocks

1.2.2 Diagram Output References

Signal	Data Type	Description
O01	BINARY	S88 SFC 5-Branch
O02	BINARY	S88 SFC 5-Branch
O03	BINARY	S88 SFC 5-Branch
O04	BINARY	S88 SFC 5-Branch
O05	BINARY	S88 SFC 5-Branch
O06	BINARY	S88 SFC 5-Branch
O07	BINARY	S88 SFC 5-Branch
O08	BINARY	S88 SFC 5-Branch
O09	BINARY	S88 SFC 5-Branch
OAUT01	BINARY	S88 SFC 5-Branch
OMAN01	BINARY	S88 SFC 5-Branch
OOFR01	BINARY	S88 SFC 5-Branch
OOFS01	BINARY	S88 SFC 5-Branch
OONR01	BINARY	S88 SFC 5-Branch
OONS01	BINARY	S88 SFC 5-Branch
OSTP01	BINARY	S88 SFC 5-Branch
S005	BINARY	S88 SFC 5-Branch
S010	BINARY	S88 SFC 5-Branch
S020	BINARY	S88 SFC 5-Branch
S030	BINARY	S88 SFC 5-Branch
S040	BINARY	S88 SFC 5-Branch
S050	BINARY	S88 SFC 5-Branch
S610	BINARY	S88 SFC 5-Branch
S620	BINARY	S88 SFC 5-Branch
S630	BINARY	S88 SFC 5-Branch
S640	BINARY	S88 SFC 5-Branch
S710	BINARY	S88 SFC 5-Branch
S720	BINARY	S88 SFC 5-Branch
S730	BINARY	S88 SFC 5-Branch
S740	BINARY	S88 SFC 5-Branch
S810	BINARY	S88 SFC 5-Branch
S820	BINARY	S88 SFC 5-Branch
S830	BINARY	S88 SFC 5-Branch

Signal	Data Type	Description
S840	BINARY	S88 SFC 5-Branch
S850	BINARY	S88 SFC 5-Branch
S905	BINARY	S88 SFC 5-Branch
S910	BINARY	S88 SFC 5-Branch
S920	BINARY	S88 SFC 5-Branch
S930	BINARY	S88 SFC 5-Branch
S940	BINARY	S88 SFC 5-Branch
STA01	PACKED	S88 SFC 5-Branch
STA02	PACKED	S88 SFC 5-Branch
THLD01	BINARY	S88 SFC 5-Branch
TIME01	ANALOG	S88 SFC 5-Branch
TPST01	BINARY	S88 SFC 5-Branch
TSTP01	BINARY	S88 SFC 5-Branch
Y01	ANALOG	Real value 1 from batch
Y01	ANALOG	Real value 2 from batch
Y01	ANALOG	Real value 1 to batch
Y01	ANALOG	Real value 2 to batch
YI01	ANALOG	Integer value 1 from batch
YI01	ANALOG	Integer value 2 from batch
YI01	ANALOG	Integer value 1 to batch
YI01	ANALOG	Integer value 2 to batch

Table 1.2 Function Diagram Output References

1.2.3 I/O Modules

No IO modules used in this function diagram template.

1.2.4 Diagram Input References

The diagram input references are not connected in this function diagram template.

1.3 Function Template

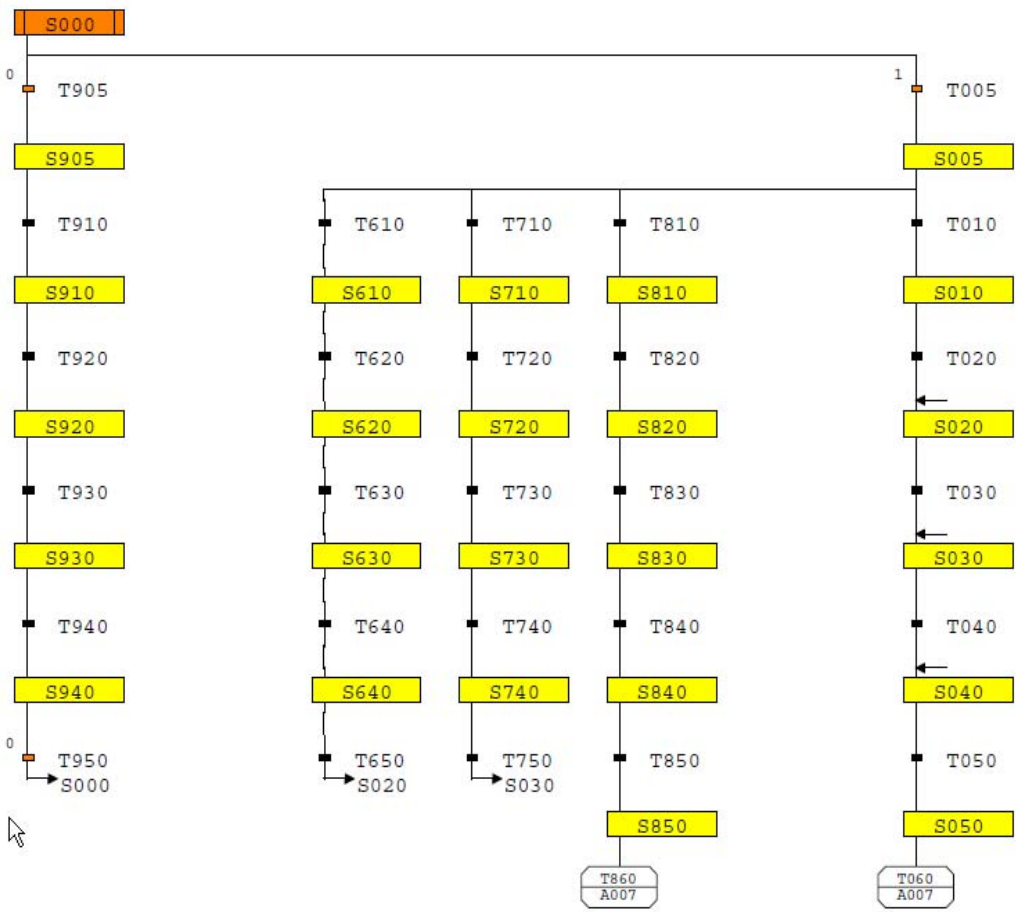

Figure 1.1 Function Template PC_S88_SFC (Page 1/6)

Figure 1.2 Function Template PC_S88_SFC (Page 2/6)

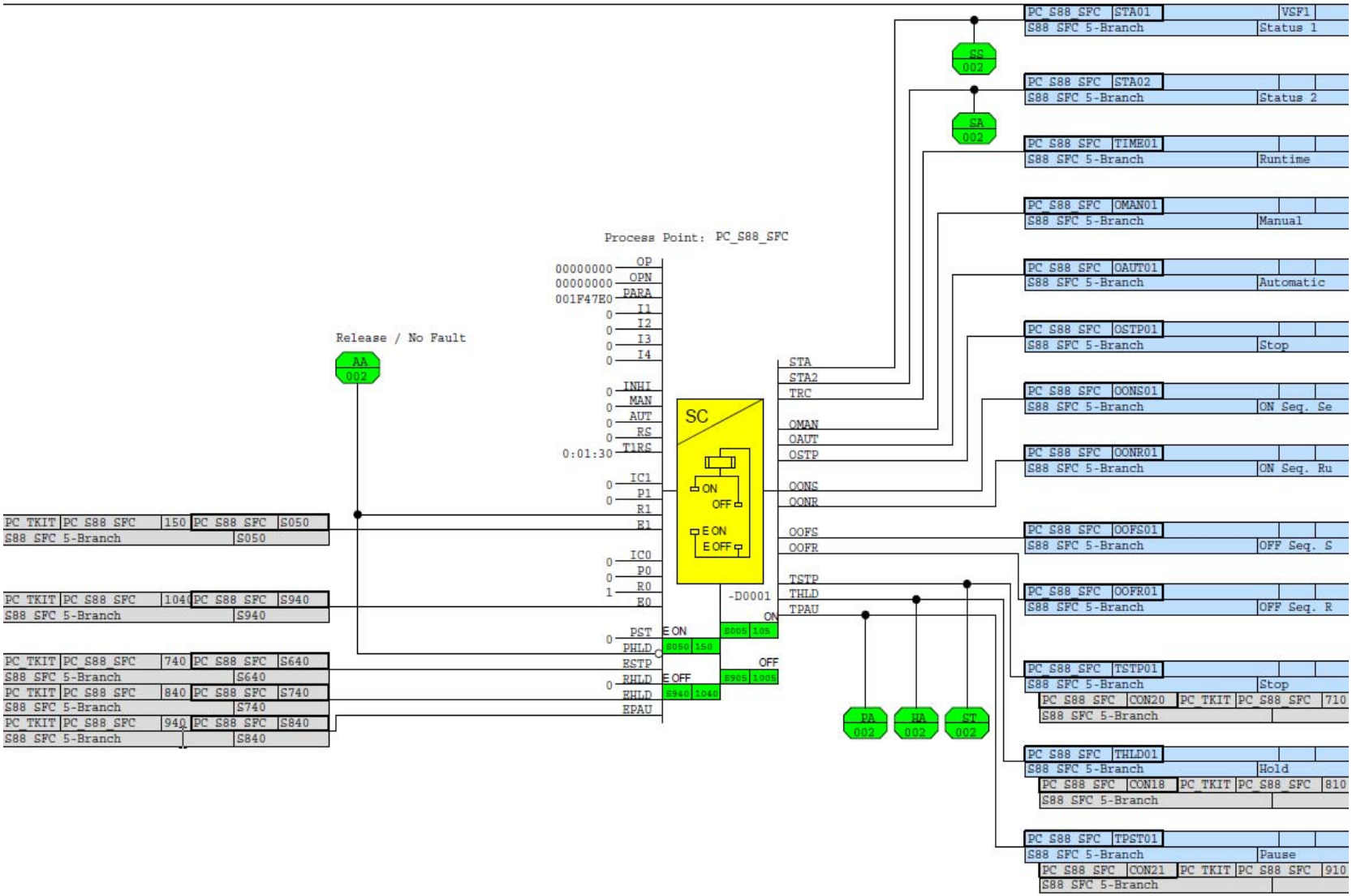

Figure 1.3 Function Template PC_S88_SFC (Page 3/6)

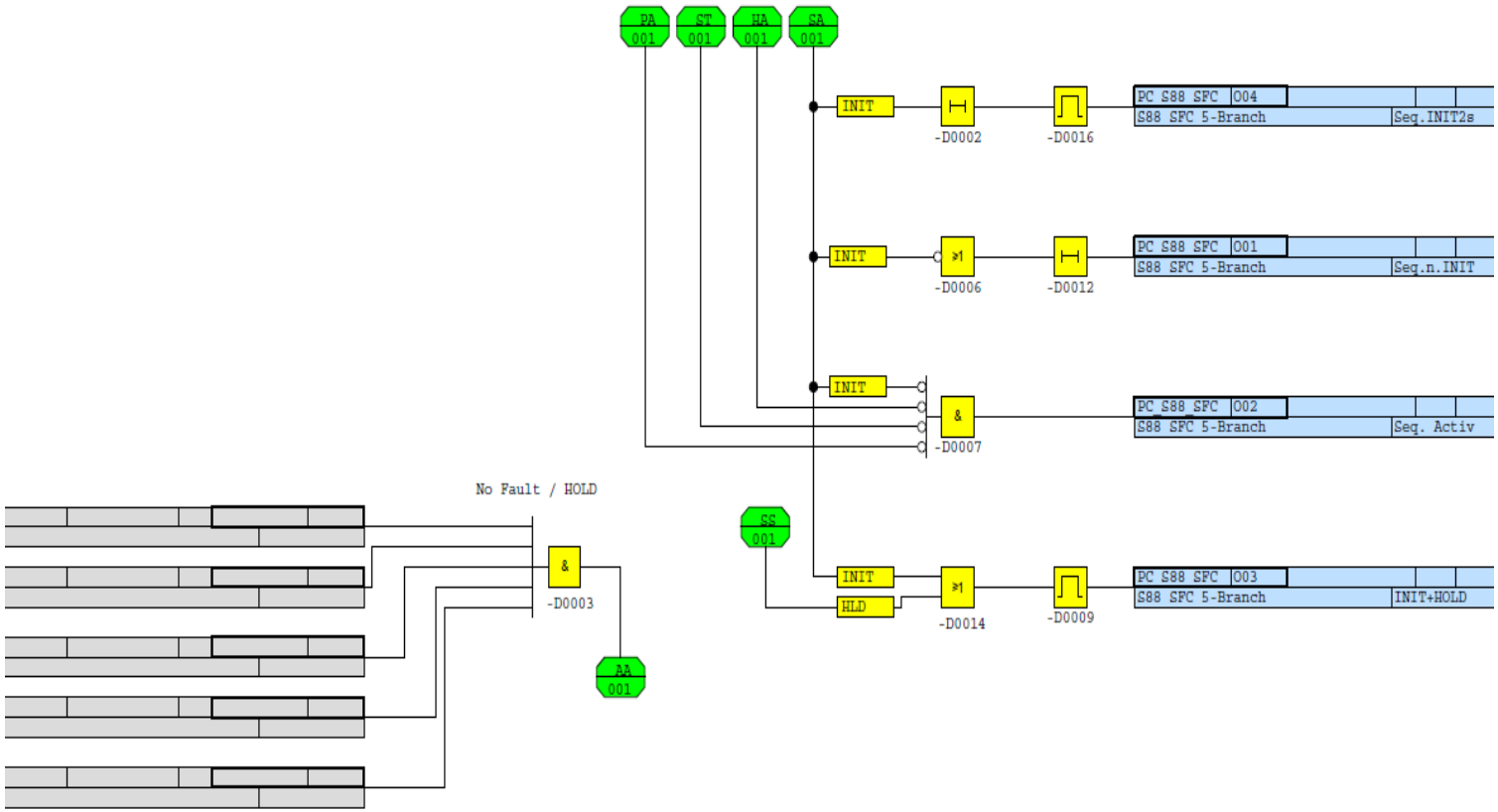

Figure 1.4 Function Template PC_S88_SFC (Page 4/6)

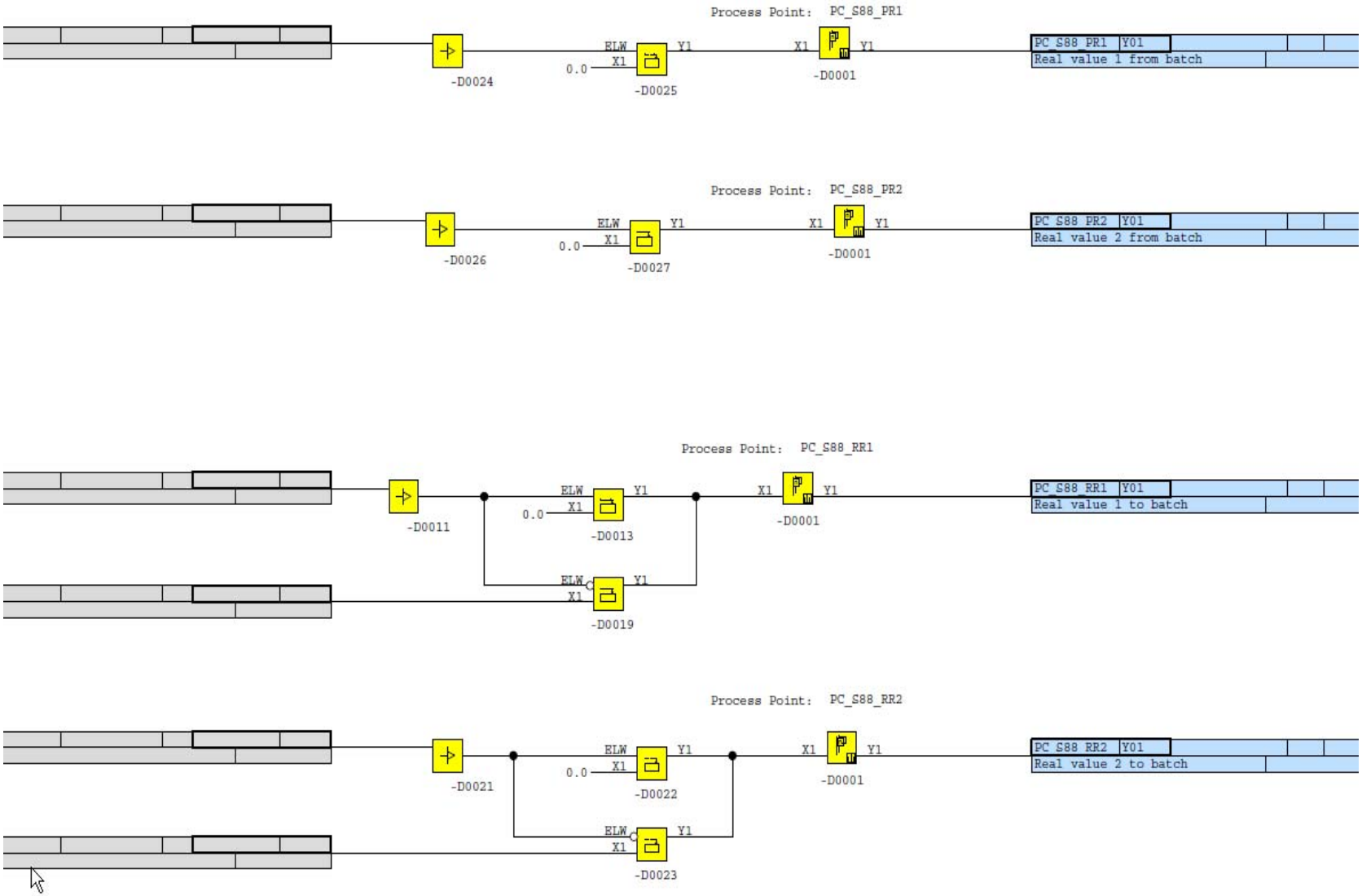

Figure 1.5 Function Template PC_S88_SFC (Page 5/6)

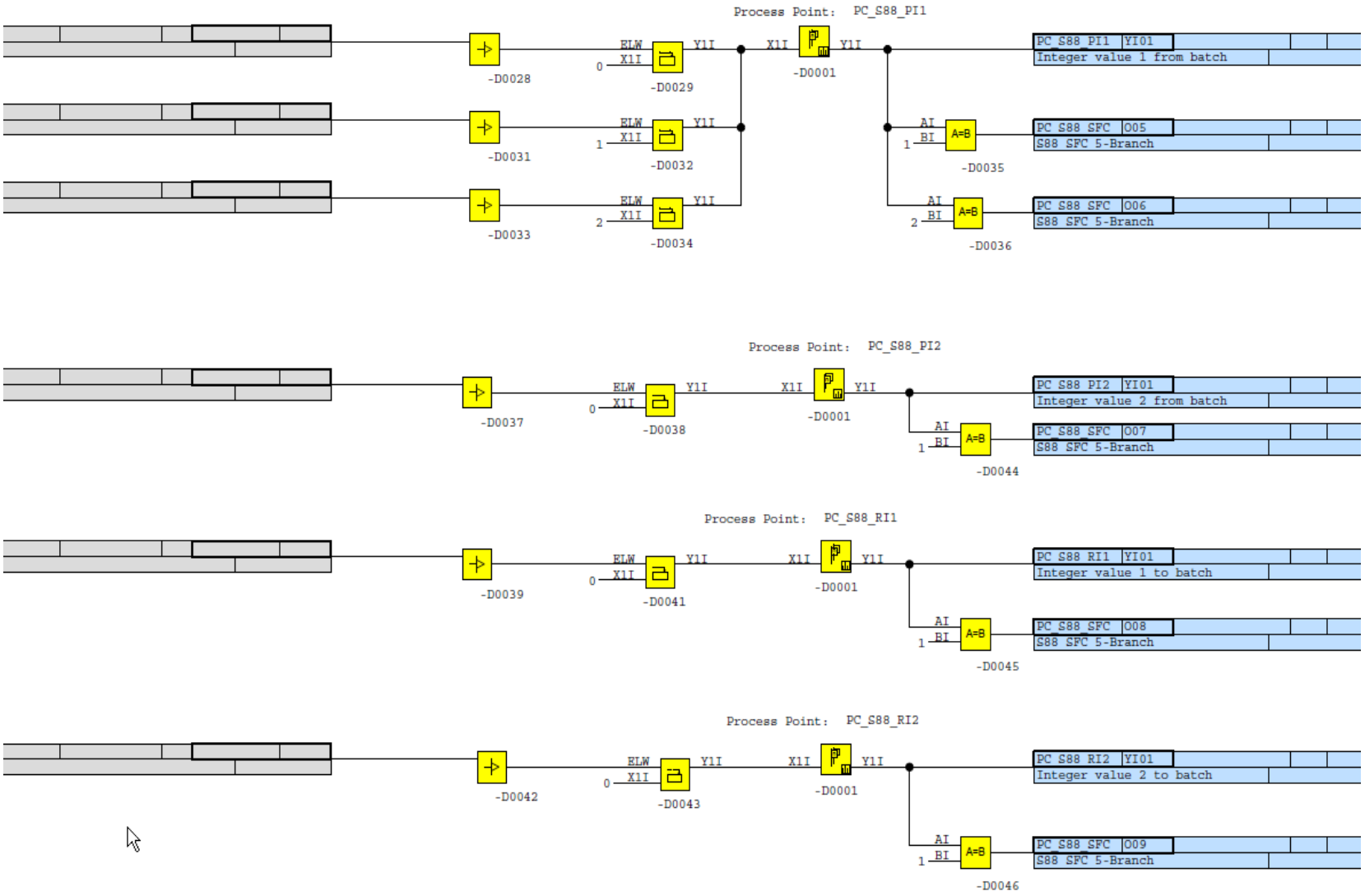

Figure 1.6 Function Template PC_S88_SFC (Page 6/6)

1.4 Configurable Parameters

The following parameters are in the function diagram template and can be engineered using Excel sheet data mechanisms.

In general the function block parameters and signals can be exported to Excel sheet and can be engineered and imported.

1.4.1 Function Blocks

The visible and not connected parameters in the function diagram template are in **Bold**.

PC_S88_SFC

Function Block	Input	Value	Data Type	Description
AND-B0	I1	1	Bool	Input boolean
AND-B0	I2	1	Bool	Input boolean
AND-B0	I3	1	Bool	Input boolean
AND-B0	I4	1	Bool	Input boolean
AND-B0	I5	1	Bool	Input boolean
BFLAG-I0	AKEF	0	Bool	Rel. access lock for funct.
BFLAG-I0	AKEF	0	Bool	Rel. access lock for funct.
BFLAG-I0	AKEF	0	Bool	Rel. access lock for funct.
BFLAG-I0	AKEF	0	Bool	Rel. access lock for funct.
BFLAG-I0	AKFR	0	Bool	Reset access lock
BFLAG-I0	AKFR	0	Bool	Reset access lock
BFLAG-I0	AKFR	0	Bool	Reset access lock
BFLAG-I0	AKFR	0	Bool	Reset access lock
BFLAG-I0	AKFS	0	Bool	Set access lock
BFLAG-I0	AKFS	0	Bool	Set access lock
BFLAG-I0	AKFS	0	Bool	Set access lock
BFLAG-I0	AKFS	0	Bool	Set access lock
BFLAG-I0	MDO	00000000	Packed Bool	Oper. word operation
BFLAG-I0	MDO	00000000	Packed Bool	Oper. word operation
BFLAG-I0	MDO	00000000	Packed Bool	Oper. word operation
BFLAG-I0	MDO	00000000	Packed Bool	Oper. word operation
BFLAG-I0	X1	0	Integer	Input integer
BFLAG-I0	X1	0	Integer	Input integer
BFLAG-I0	X1	0	Integer	Input integer
BFLAG-I0	X1	0	Integer	Input integer

Function Block	Input	Value	Data Type	Description
BFLAG-R0	AKEF	0	Bool	Rel. access lock for funct.
BFLAG-R0	AKEF	0	Bool	Rel. access lock for funct.
BFLAG-R0	AKEF	0	Bool	Rel. access lock for funct.
BFLAG-R0	AKEF	0	Bool	Rel. access lock for funct.
BFLAG-R0	AKFR	0	Bool	Reset access lock
BFLAG-R0	AKFR	0	Bool	Reset access lock
BFLAG-R0	AKFR	0	Bool	Reset access lock
BFLAG-R0	AKFR	0	Bool	Reset access lock
BFLAG-R0	AKFS	0	Bool	Set access lock
BFLAG-R0	AKFS	0	Bool	Set access lock
BFLAG-R0	AKFS	0	Bool	Set access lock
BFLAG-R0	AKFS	0	Bool	Set access lock
BFLAG-R0	MDO	00000000	Packed Bool	Oper. word operation
BFLAG-R0	MDO	00000000	Packed Bool	Oper. word operation
BFLAG-R0	MDO	00000000	Packed Bool	Oper. word operation
BFLAG-R0	MDO	00000000	Packed Bool	Oper. word operation
BFLAG-R0	X1	0.0	Real	Input real
BFLAG-R0	X1	0.0	Real	Input real
BFLAG-R0	X1	0.0	Real	Input real
BFLAG-R0	X1	0.0	Real	Input real
BSFUP_P	BIT	0	Bool	
BSFUP_P	BIT	0	Bool	
BSFUP_P	BIT	0	Bool	
BSFUP_P	BIT	20	Bool	
BSFUP_P	BIT	0	Bool	
DELAY-00	RS1	0	Bool	Reset
DELAY-00	RS1	0	Bool	Reset
DELAY-00	RS2	0	Bool	Reset
DELAY-00	RS2	0	Bool	Reset
DELAY-00	T1	0:00:02.000	Duration	Delay in starting
DELAY-00	T1	0:00:02.000	Duration	Delay in starting
DELAY-00	T2	0:00:00.000	Duration	Drop delay
DELAY-00	T2	0:00:00.000	Duration	Drop delay
DYNOR-00	T	0:00:02.000	Duration	Time value
DYNOR-00	T	0:00:02.000	Duration	Time value

Function Block	Input	Value	Data Type	Description
DYNOR-00	T	0:00:02.000	Duration	Time value
DYNOR-00	T	0:00:02.000	Duration	Time value
DYNOR-00	T	0:00:02.000	Duration	Time value
DYNOR-00	T	0:00:02.000	Duration	Time value
DYNOR-00	T	0:00:02.000	Duration	Time value
DYNOR-00	T	0:00:02.000	Duration	Time value
DYNOR-00	T	0:00:02.000	Duration	Time value
DYNOR-00	T	0:00:02.000	Duration	Time value
EQ-I0	BI	1	Integer	Input integer
EQ-I0	BI	2	Integer	Input integer
EQ-I0	BI	1	Integer	Input integer
EQ-I0	BI	1	Integer	Input integer
EQ-I0	BI	1	Integer	Input integer
LWR-I0	PARA	00000000	Packed Bool	PBool
LWR-I0	PARA	00000000	Packed Bool	PBool
LWR-I0	PARA	00000000	Packed Bool	PBool
LWR-I0	PARA	00000000	Packed Bool	PBool
LWR-I0	PARA	00000000	Packed Bool	PBool
LWR-I0	PARA	00000000	Packed Bool	PBool
LWR-I0	X1	0	Integer	Input integer
LWR-I0	X1	1	Integer	Input integer
LWR-I0	X1	2	Integer	Input integer
LWR-I0	X1	0	Integer	Input integer
LWR-I0	X1	0	Integer	Input integer
LWR-I0	X1	0	Integer	Input integer
LWR-R0	PARA	00000000	Packed Bool	PBool
LWR-R0	PARA	00000000	Packed Bool	PBool
LWR-R0	PARA	00000000	Packed Bool	PBool
LWR-R0	PARA	00000000	Packed Bool	PBool
LWR-R0	PARA	00000000	Packed Bool	PBool
LWR-R0	PARA	00000000	Packed Bool	PBool
LWR-R0	X1	0.0	Real	Input real
LWR-R0	X1	0.0	Real	Input real
LWR-R0	X1	0.0	Real	Input real
LWR-R0	X1	0.0	Real	Input real

Function Block	Input	Value	Data Type	Description
MFLOP-00	RS	0	Bool	Reset
MFLOP-00	RS	0	Bool	Reset
MFLOP-00	T	0:00:02.000	Duration	Time value
MFLOP-00	T	0:00:02.000	Duration	Time value
SC2-10	**AUT**	**0**	**Bool**	**Automatic**
SC2-10	E0	Connected	Bool	Feedback 0
SC2-10	E1	Connected	Bool	Feedback 1
SC2-10	EFRS	0	Bool	Reset end position error
SC2-10	EHLD	Connected	Bool	Hold branch end
SC2-10	EPAU	Connected	Bool	Pause branch end
SC2-10	ESTP	Connected	Bool	Stop branch end
SC2-10	**I1**	**0**	**Bool**	**Input boolean**
SC2-10	**I2**	**0**	**Bool**	**Input boolean**
SC2-10	**I3**	**0**	**Bool**	**Input boolean**
SC2-10	**I4**	**0**	**Bool**	**Input boolean**
SC2-10	**IC0**	**0**	**Bool**	**Control 0**
SC2-10	**IC1**	**0**	**Bool**	**Control 1**
SC2-10	**INHI**	**0**	**Bool**	**Lock mode switchover**
SC2-10	**MAN**	**0**	**Bool**	**Manual**
SC2-10	**OP**	**00000000**	**Packed Bool**	**Operation nom. word**
SC2-10	**OPN**	**00000000**	**Packed Bool**	**Operation locked**
SC2-10	**P0**	**0**	**Bool**	**Protection 0**
SC2-10	**P1**	**0**	**Bool**	**Protection 1**
SC2-10	**PARA**	**001F47E0**	**Packed Bool**	**PBool**
SC2-10	PHLD	Connected	Bool	Protection hold
SC2-10	**PST**	**0**	**Bool**	**Protection Stop**
SC2-10	**R0**	**0**	**Bool**	**Release 0**
SC2-10	R1	Connected	Bool	Release 1
SC2-10	RFRS	0	Bool	Runtime error reset
SC2-10	**RHLD**	**0**	**Bool**	**Restart in hold branch**
SC2-10	RPAU		Bool	Reset in pause branch
SC2-10	**RS**	**0**	**Bool**	**Reset**
SC2-10	RSTP	0	Bool	Restart in stop branch
SC2-10	**T1RS**	**0:01:30**	**Long Duration**	**Reset delay in endpos.**
SC2-10	ZOP	1	Bool	Integrated operation

Function Block	Input	Value	Data Type	Description
STEP-00	STT	RUN Start	ST20	Step text
STEP-00	STT	Running	ST20	Step text
STEP-00	STT	Running	ST20	Step text
STEP-00	STT	Running	ST20	Step text
STEP-00	STT	Running	ST20	Step text
STEP-00	STT	Complete	ST20	Step text
STEP-00	STT	STOP	ST20	Step text
STEP-00	STT	Stopping	ST20	Step text
STEP-00	STT	Stopping	ST20	Step text
STEP-00	STT	Stopped	ST20	Step text
STEP-00	STT	HOLD	ST20	Step text
STEP-00	STT	Holding	ST20	Step text
STEP-00	STT	Holding	ST20	Step text
STEP-00	STT	Held	ST20	Step text
STEP-00	STT	PAUSE	ST20	Step text
STEP-00	STT	Pausing	ST20	Step text
STEP-00	STT	Pausing	ST20	Step text
STEP-00	STT	Paused	ST20	Step text
STEP-00	STT	Resume	ST20	Step text
STEP-00	STT	ABORT Start	ST20	Step text
STEP-00	STT	Aborting	ST20	Step text
STEP-00	STT	Aborting	ST20	Step text
STEP-00	STT	Aborting	ST20	Step text
STEP-00	STT	Aborted	ST20	Step text
STEP-00	TMO	0:00:20	Long Duration	Monitoring time step
STEP-00	TMO	0:00:05	Long Duration	Monitoring time step
STEP-00	TMO	0:01:05	Long Duration	Monitoring time step
STEP-00	TMO	0:01:05	Long Duration	Monitoring time step
STEP-00	TMO	0:01:05	Long Duration	Monitoring time step
STEP-00	TMO	0:00:00	Long Duration	Monitoring time step
STEP-00	TMO	0:01:05	Long Duration	Monitoring time step
STEP-00	TMO	0:01:05	Long Duration	Monitoring time step
STEP-00	TMO	0:01:05	Long Duration	Monitoring time step
STEP-00	TMO	0:00:00	Long Duration	Monitoring time step
STEP-00	TMO	0:00:20	Long Duration	Monitoring time step

Function Block	Input	Value	Data Type	Description
STEP-00	TMO	0:01:05	Long Duration	Monitoring time step
STEP-00	TMO	0:01:05	Long Duration	Monitoring time step
STEP-00	TMO	0:00:00	Long Duration	Monitoring time step
STEP-00	TMO	0:01:05	Long Duration	Monitoring time step
STEP-00	TMO	0:01:05	Long Duration	Monitoring time step
STEP-00	TMO	0:01:05	Long Duration	Monitoring time step
STEP-00	TMO	0:00:00	Long Duration	Monitoring time step
STEP-00	TMO	0:01:05	Long Duration	Monitoring time step
STEP-00	TMO	0:00:20	Long Duration	Monitoring time step
STEP-00	TMO	0:01:05	Long Duration	Monitoring time step
STEP-00	TMO	0:01:05	Long Duration	Monitoring time step
STEP-00	TMO	0:01:05	Long Duration	Monitoring time step
STEP-00	TMO	0:00:00	Long Duration	Monitoring time step
STEP-00	TWA	0:00:02	Long Duration	Waiting time step
STEP-00	TWA	0:00:02	Long Duration	Waiting time step
STEP-00	TWA	0:00:30	Long Duration	Waiting time step
STEP-00	TWA	0:00:30	Long Duration	Waiting time step
STEP-00	TWA	0:00:30	Long Duration	Waiting time step
STEP-00	TWA	0:00:02	Long Duration	Waiting time step
STEP-00	TWA	0:00:02	Long Duration	Waiting time step
STEP-00	TWA	0:00:05	Long Duration	Waiting time step
STEP-00	TWA	0:00:05	Long Duration	Waiting time step
STEP-00	TWA	0:00:02	Long Duration	Waiting time step
STEP-00	TWA	0:00:02	Long Duration	Waiting time step
STEP-00	TWA	0:00:05	Long Duration	Waiting time step
STEP-00	TWA	0:00:05	Long Duration	Waiting time step
STEP-00	TWA	0:00:02	Long Duration	Waiting time step
STEP-00	TWA	0:00:02	Long Duration	Waiting time step
STEP-00	TWA	0:00:05	Long Duration	Waiting time step
STEP-00	TWA	0:00:05	Long Duration	Waiting time step
STEP-00	TWA	0:00:02	Long Duration	Waiting time step
STEP-00	TWA	0:00:10	Long Duration	Waiting time step
STEP-00	TWA	0:00:02	Long Duration	Waiting time step
STEP-00	TWA	0:00:05	Long Duration	Waiting time step
STEP-00	TWA	0:00:30	Long Duration	Waiting time step

Function Block	Input	Value	Data Type	Description
STEP-00	TWA	0:00:05	Long Duration	Waiting time step
STEP-00	TWA	0:00:02	Long Duration	Waiting time step
TRANS-00	CON	1	Bool	Sequence switching condition
TRANS-00	CON	1	Bool	Sequence switching condition
TRANS-00	CON	1	Bool	Sequence switching condition
TRANS-00	CON	1	Bool	Sequence switching condition
TRANS-00	CON	1	Bool	Sequence switching condition
TRANS-00	CON	1	Bool	Sequence switching condition
TRANS-00	CON	1	Bool	Sequence switching condition
TRANS-00	CON	1	Bool	Sequence switching condition
TRANS-00	CON	1	Bool	Sequence switching condition
TRANS-00	CON	1	Bool	Sequence switching condition
TRANS-00	CON	1	Bool	Sequence switching condition
TRANS-00	CON	1	Bool	Sequence switching condition
TRANS-00	CON	1	Bool	Sequence switching condition
TRANS-00	CON	1	Bool	Sequence switching condition
TRANS-00	CON	1	Bool	Sequence switching condition
TRANS-00	CON	1	Bool	Sequence switching condition
TRANS-00	CON	1	Bool	Sequence switching condition
TRANS-00	CON	1	Bool	Sequence switching condition
TRANS-00	CON	1	Bool	Sequence switching condition
TRANS-00	CON	1	Bool	Sequence switching condition
TRANS-00	CON	1	Bool	Sequence switching condition
TRANS-00	CON	1	Bool	Sequence switching condition
TRANS-00	CON	1	Bool	Sequence switching condition
TRANS-00	OFL	0	Bool	Override condition
TRANS-00	OFL	0	Bool	Override condition
TRANS-00	OFL	0	Bool	Override condition
TRANS-00	OFL	0	Bool	Override condition
TRANS-00	OFL	0	Bool	Override condition
TRANS-00	OFL	0	Bool	Override condition
TRANS-00	OFL	0	Bool	Override condition
TRANS-00	OFL	0	Bool	Override condition
TRANS-00	OFL	0	Bool	Override condition
TRANS-00	OFL	0	Bool	Override condition
TRANS-00	OFL	0	Bool	Override condition

Function Block	Input	Value	Data Type	Description
TRANS-00	OFL	0	Bool	Override condition
TRANS-00	OFL	0	Bool	Override condition
TRANS-00	OFL	0	Bool	Override condition
TRANS-00	OFL	0	Bool	Override condition
TRANS-00	OFL	0	Bool	Override condition
TRANS-00	OFL	0	Bool	Override condition
TRANS-00	OFL	0	Bool	Override condition
TRANS-00	OFL	0	Bool	Override condition
TRANS-00	OFL	0	Bool	Override condition
TRANS-00	OFL	0	Bool	Override condition
TRANS-00	OFL	0	Bool	Override condition
TRANS-00	OFL	0	Bool	Override condition
TRANS-00	OFL	0	Bool	Override condition
TRANS-00	OFL	0	Bool	Override condition
TRANS-00	OFL	0	Bool	Override condition

Table 1.3 Parameters of Function Block PC_S88_SFC

1.4.2 Diagram Output References / Signal parameters

PC_S88_SFC

Signal	Data Type	Value High	Value Low	Alarm Template	Archive Template
O01	BINARY	Seq.n.INIT			
O02	BINARY	Seq. Activ			
O03	BINARY	INIT+HOLD			
O04	BINARY	Seq.INIT2s			
O05	BINARY				
O06	BINARY				
O07	BINARY				
O08	BINARY				
O09	BINARY				
OAUT01	BINARY	Automatic			
OMAN01	BINARY	Manual			
OOFR01	BINARY	OFF Seq. R			
OOFS01	BINARY	OFF Seq. S			
OONR01	BINARY	ON Seq. Ru			

Signal	Data Type	Value High	Value Low	Alarm Template	Archive Template
OONS01	BINARY	ON Seq. Se			
OSTP01	BINARY	Stop			
S005	BINARY	S005	S005		
S010	BINARY	S010	S010		
S020	BINARY	S020	S020		
S030	BINARY	S030	S030		
S040	BINARY	S040	S040		
S050	BINARY	S050	S050		
S610	BINARY	S610	S610		
S620	BINARY	S620	S620		
S630	BINARY	S630	S630		
S640	BINARY	S640	S640		
S710	BINARY	S710	S710		
S720	BINARY	S720	S720		
S730	BINARY	S730	S730		
S740	BINARY	S740	S740		
S810	BINARY	S810	S810		
S820	BINARY	S820	S820		
S830	BINARY	S830	S830		
S840	BINARY	S840	S840		
S850	BINARY	S850	S850		
S905	BINARY	S905	S905		
S910	BINARY	S910	S910		
S920	BINARY	S920	S920		
S930	BINARY	S930	S930		
S940	BINARY	S940	S940		
STA01	PACKED	Status 1		VSF1	
STA02	PACKED	Status 2			
THLD01	BINARY	Hold			
TIME01	ANALOG	Runtime			
TPST01	BINARY	Pause			
TSTP01	BINARY	Stop			
Y01	ANALOG				
Y01	ANALOG				
Y01	ANALOG				

Signal	Data Type	Value High	Value Low	Alarm Template	Archive Template
Y01	ANALOG				
YI01	ANALOG				
YI01	ANALOG				
YI01	ANALOG				
YI01	ANALOG				

Table 1.4 Signal Parameters of PC_S88_SFC

1.5 Additional Information

No additional information used in this function diagram template.

1.6 Performance of the function module in a fault scenario

In a fault scenario the module will generate an alarm/event.

2. Document References

Ref.	Document title	Document number
/1/	System 800xA PC Toolkit Library for Melody – Operation, User Manual	3BDA033439R5101EN
/2/	System 800xA PC Toolkit Library for Melody – Installation and Configuration, User Manual	3BDA033456R5103EN
/3/	S+ Engineering Function Blocks Operation	2VAA000580-530
/4/	S+ Engineering: Function Blocks Binary	2VAA000572-530
/5/	S+ Engineering: Function Blocks Analog / Binary	2VAA000571-530
/6/	S+ Engineering: Function Blocks Control	2VAA000573-530

Table 2.1 References

3BDA033930R5101EN_FD_PC_S88_SFC Germany Jul 2011

Copyright © 2011 by ABB. All Rights Reserved
® Registered Trademark of ABB.
™ Trademark of ABB.

BU Oil, Gas and Petrochemical
Frankfurt, Germany
www.abb.com/chemicals