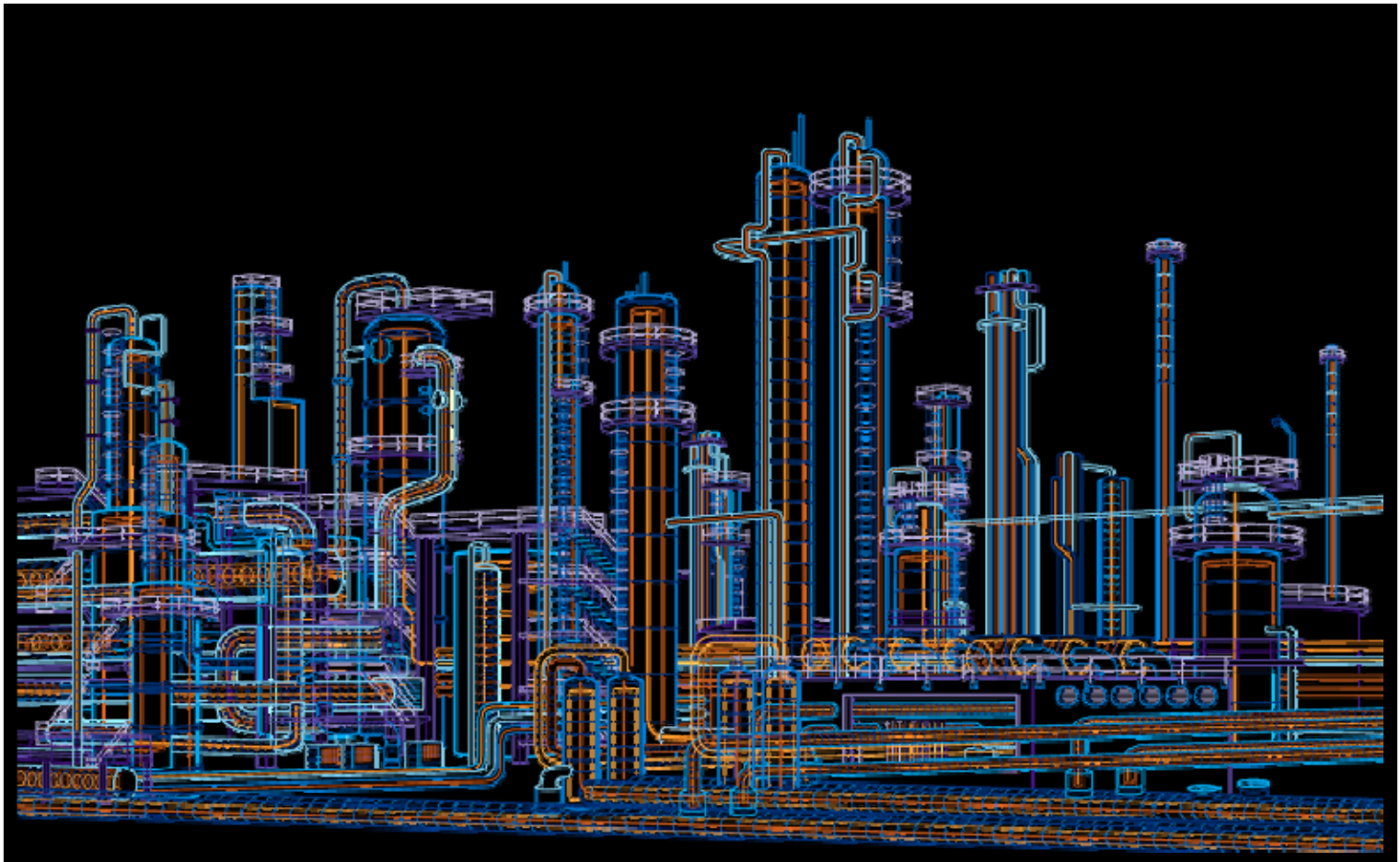

System 800xA
PC Toolkit Library for Melody
Function Diagram Template - PC_B_HVFC_1
User Manual

System Version 5.1

Power and productivity
for a better world™

Purpose

The purpose of this document is to describe the features and functionality of the function diagram template for a batch on/off valve (fail open). This document will define the ABB Control System standards for the implementation of the Toolkit specification to be adopted across all sites and on all plants.

Conditions

The System Extension supports System 800xA System Version 5.1 or higher.

Notice

This document contains information about one or more ABB products and may include a description of or a reference to one or more standards that may be generally relevant to the ABB products. The presence of any such description of a standard or reference to a standard is not a representation that all of the ABB products referenced in this document support all of the features of the described or referenced standard.

This document and parts thereof must not be reproduced or copied without written permission from ABB, and the contents thereof must not be imparted to a third party nor used for any unauthorized purpose.

Trademarks

All rights to copyrights, registered trademarks, and trademarks reside with their respective owners.

Copyright © 2011 by ABB.

All rights reserved.

Release: 2011-06-30

Document Number: 3BDA033930R5101EN_FD_PC_B_HVFC_1

Table of contents

1. Function 4
1.1 General Functional Description 4
1.2 Used Blocks 4
1.2.1 Function Blocks 4
1.2.2 Diagram Output References 5
1.2.3 I/O Modules 5
1.2.4 Diagram Input References 5
1.3 Function Template 6
1.4 Configurable Parameters 12
1.4.1 Function Blocks 12
1.4.2 IO Modules 13
1.4.3 Diagram Output References / Signal Parameters 14
1.5 Additional Information 14
1.6 Performance of the function module in a fault scenario 14
2. Document References 15

1. Function

1.1 General Functional Description

The function diagram template PC_B_HVFO_1 serves to display, control and monitor a batch On/Off valve with safe failure position OPENED. It covers the following main functionality:

- Open and close the actuator from a primary control function (AUTOMATIC mode)
- Manual opening and closing of the actuator (MANUAL mode)
- Interlocking of the actuator in the safe position (OPENED)
- Limit-position indication
- Display of run-time / limit-position faults
- Monitoring open, release and no fault for batch SFC

When a fault of one of the hardware in-/outputs is detected in the system a fault message is generated and made available as an output signal at the module.

The On/Off Valve FO module provides the following hardware connections to the field:

- Command OPEN output
- Feedback valve OPEN limit switch input
- Feedback valve CLOSED limit switch input

1.2 Used Blocks

1.2.1 Function Blocks

Function Block	Name	Library	Description
IDF1DOP-01	PC_B_HVFO_1	OLC	One direction with O&M Standard Function Block description see /8/ Operation description see /1/
NAMUREX-00	PC_B_HVFO_1	I/O	HW-In digital Ex (CBI21Ex) proximity NAMUR
BOUT1-00	PC_B_HVFO_1	I/O	HW-Out digital (CBO10) standard
IVDEC-B0	PC_B_HVFO_1	Analog/Binary	Invalid decoder Boolean
AND-B0	PC_B_HVFO_1	Binary	AND Boolean
OR-B0	PC_B_HVFO_1	Binary	OR Boolean
BMEM-01	PC_B_HVFO_1	Binary	Digital memory Boolean, dynamic
DELAY-00	PC_B_HVFO_1	Binary	Delay Boolean
CONPSRC	PC_B_HVFO_1	Connectors	Connector source

Function Block	Name	Library	Description
CONPSNK	PC_B_HVFO_1	Connectors	Connector sink
BSFUP_P	PC_B_HVFO_1		Bit select function diagram

Table 1.1 Function Blocks

1.2.2 Diagram Output References

Signal	Data Type	Description
O01	BINARY	Batch On/Off Valve (FO)
O01	BINARY	Batch On/Off Valve (FO)
O02	BINARY	Batch On/Off Valve (FO)
O03	BINARY	Batch On/Off Valve (FO)
O04	BINARY	Batch On/Off Valve (FO)
OAUT01	BINARY	Batch On/Off Valve (FO)
OC1_01	BINARY	Batch On/Off Valve (FO)
OCER01	BINARY	Batch On/Off Valve (FO)
OE0_01	BINARY	Batch On/Off Valve (FO)
OE1_01	BINARY	Batch On/Off Valve (FO)
OMAN01	BINARY	Batch On/Off Valve (FO)
STA01	PACKED	Batch On/Off Valve (FO)
STA02	PACKED	Batch On/Off Valve (FO)

Table 1.2 Function Diagram Output References

1.2.3 I/O Modules

Function Block	Name	Library	Description
NAMUREX-00	PC_B_HVFO_1	I/O	HW-In digital Ex (CBI21Ex) proximity NAMUR
BOUT1-00	PC_B_HVFO_1	I/O	HW-Out digital (CBO10) standard

Table 1.3 I/O Modules

1.2.4 Diagram Input References

The diagram input references are not connected in this function diagram template.

1.3 Function Template

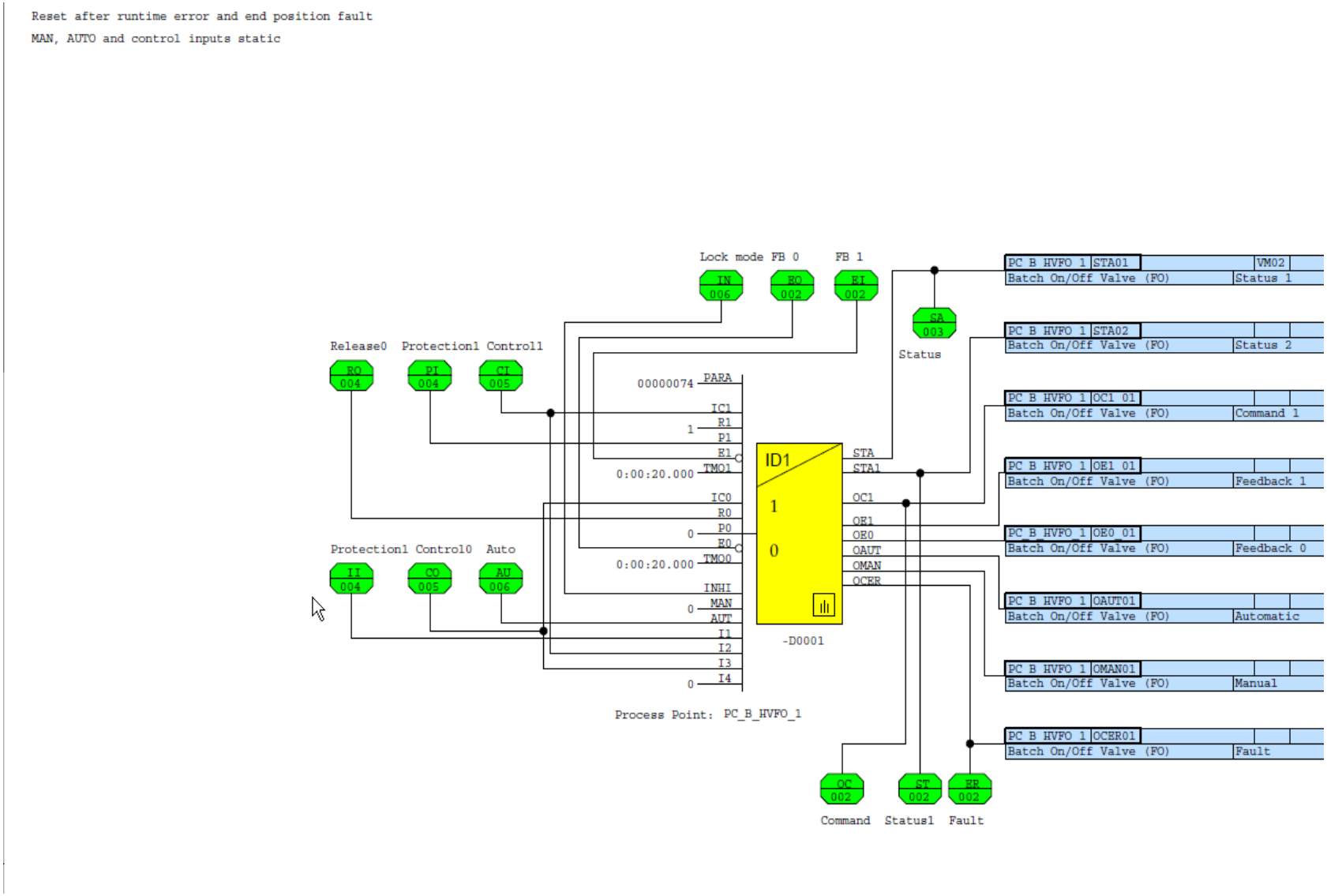

Figure 1.1 Function Template PC_B_HVFO_1 (Page 1/6)

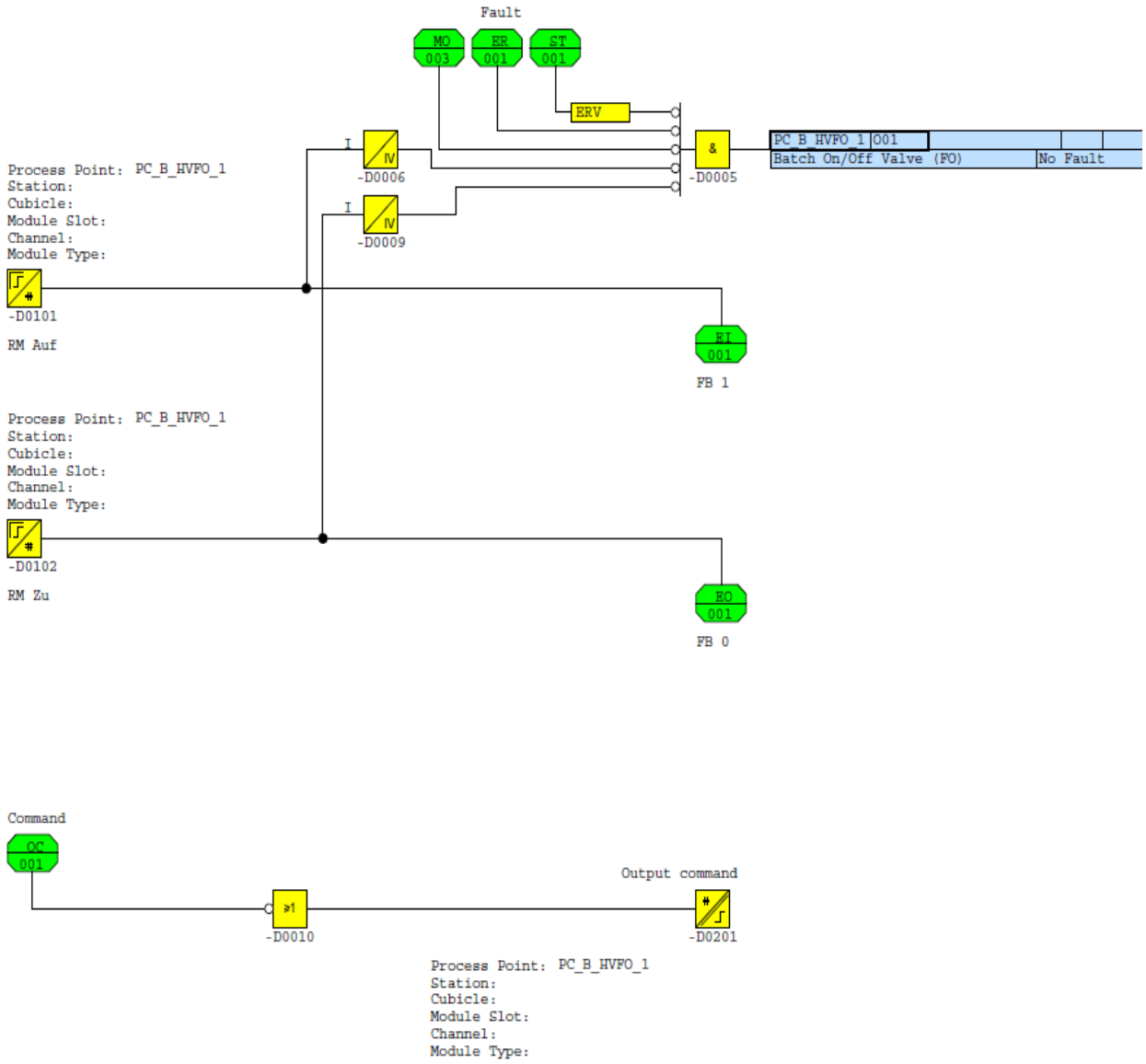

Figure 1.2 Function Template PC_B_HVFO_1 (Page 2/6)

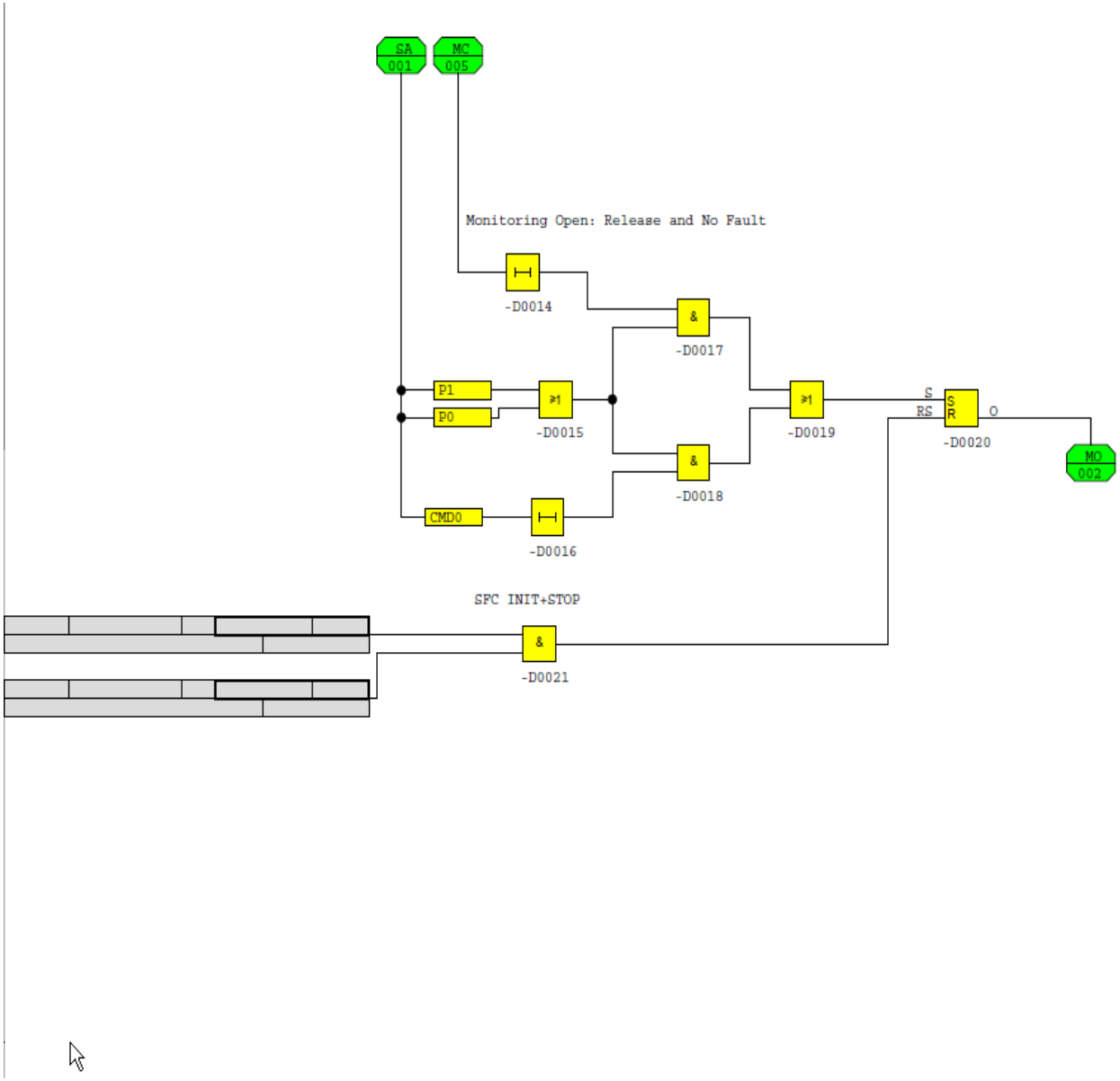

Figure 1.3 Function Template PC_B_HVFO_1 (Page 3/6)

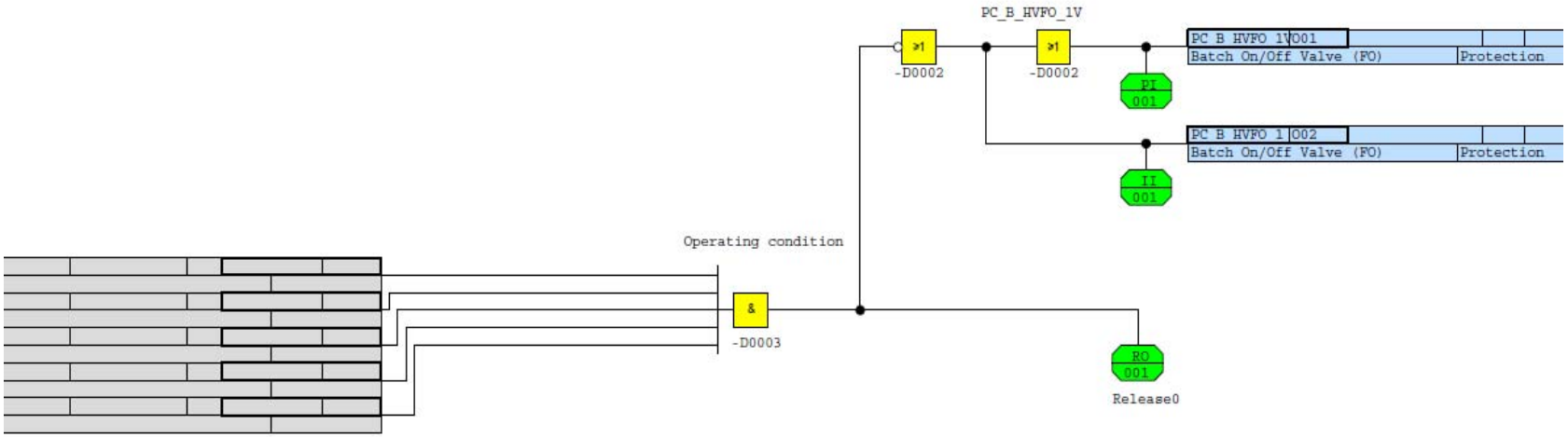

Figure 1.4 Function Template PC_B_HVFO_1 (Page 4/6)

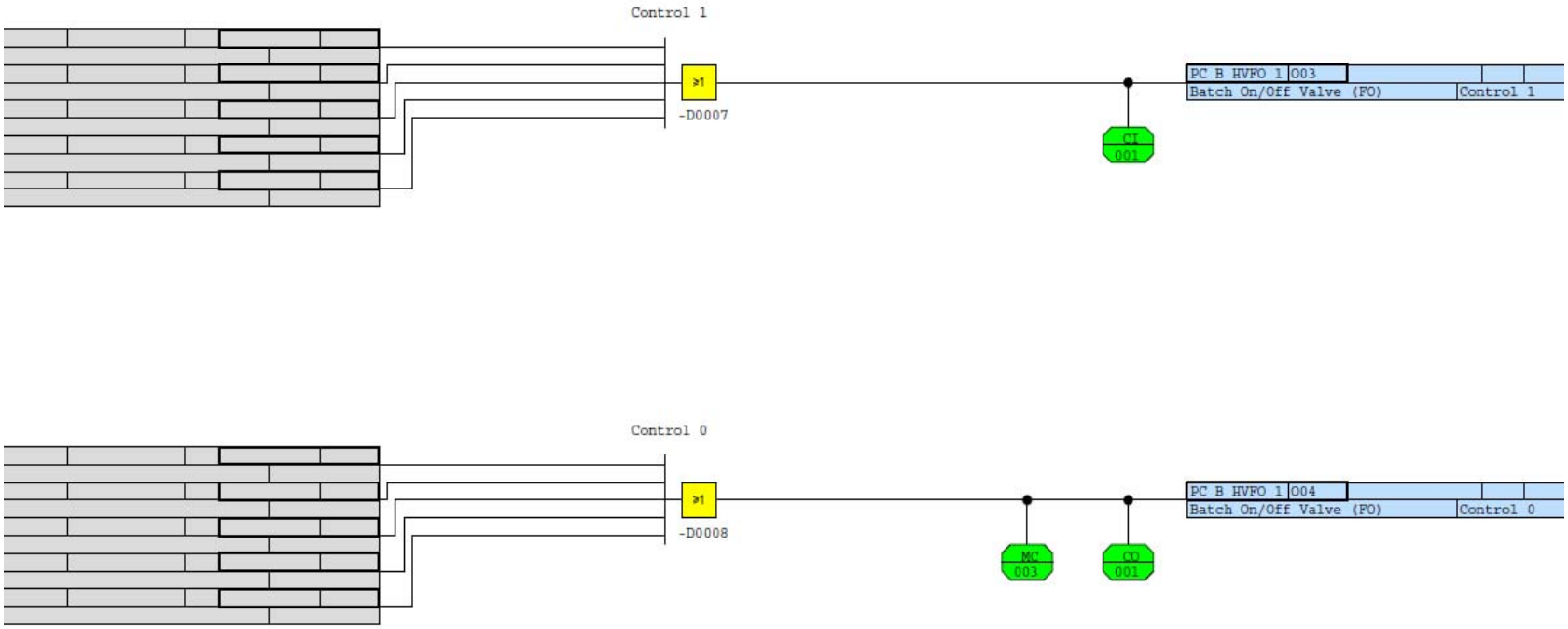

Figure 1.5 Function Template PC_B_HVFO_1 (Page 5/6)

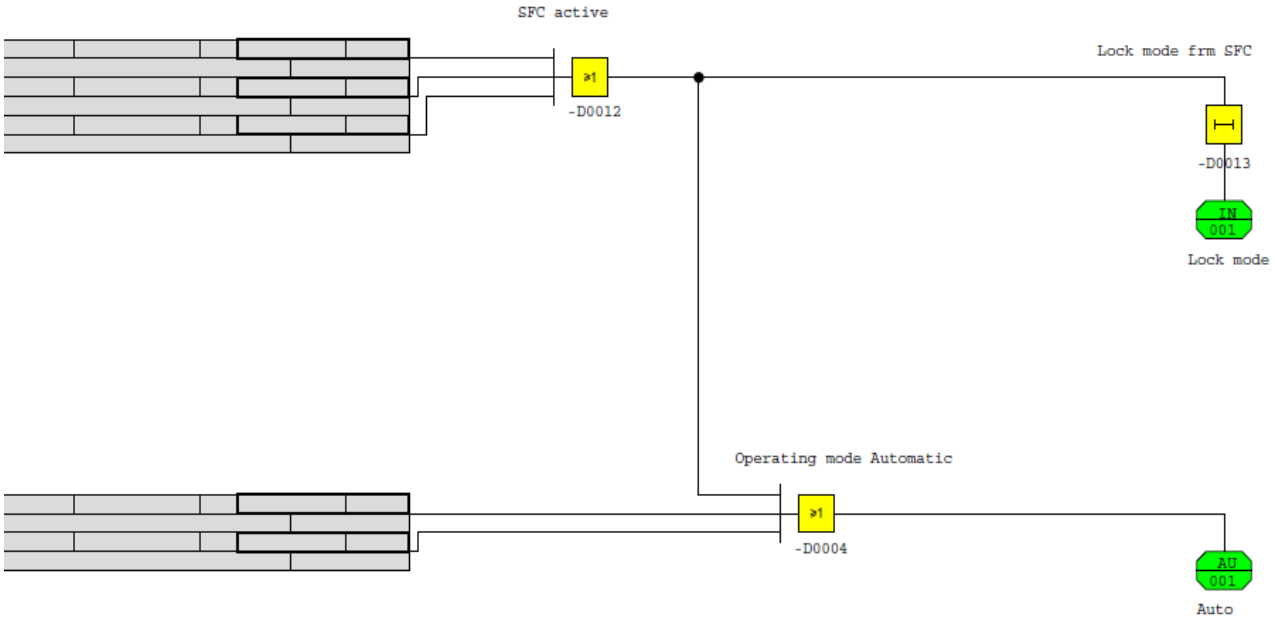

Figure 1.6 Function Template PC_B_HVFO_1 (Page 6/6)

1.4 Configurable Parameters

The following parameters are in the function diagram template and can be engineered using Excel sheet data mechanisms.

In general the function block parameters and signals can be exported to Excel sheet and can be engineered and imported.

1.4.1 Function Blocks

The visible and not connected parameters in the function diagram template are in **Bold**.

PC_B_HVFO_1

Function Block	Input	Value	Data Type	Description
BMEM-01	IVRD	0	Bool	Reset invalid
BMEM-01	IVSD	0	Bool	Set invalid
BMEM-01	RSD	0	Bool	Reset dynamic
BMEM-01	S_RS	0	Bool	Reset/set dynamic
BMEM-01	SD	0	Bool	Set dynamic
BSFUP_P	BIT	0	Bool	
BSFUP_P	BIT	13	Bool	
BSFUP_P	BIT	14	Bool	
BSFUP_P	BIT	7	Bool	
DELAY-00	RS1	0	Bool	Reset
DELAY	RS1	0	Bool	Reset
DELAY	RS1	0	Bool	Reset
DELAY-00	RS2	0	Bool	Reset
DELAY	RS1	0	Bool	Reset
DELAY	RS1	0	Bool	Reset
DELAY-00	T1	0:00:02.000	Duration	Delay in starting
DELAY	T1	0:00:05.000	Duration	Delay in starting
DELAY	T1	0:00:01.000	Duration	Delay in starting
DELAY-00	T2	0:00:00.000	Duration	Drop delay
DELAY	T2	0:00:00.000	Duration	Drop delay
DELAY	T2	0:00:00.000	Duration	Drop delay
IDF1DOP-01	AUT	Connected	Bool	Automatic
IDF1DOP-01	E0	Connected	Bool	Feedback 0
IDF1DOP-01	E1	Connected	Bool	Feedback 1
IDF1DOP-01	FCUT	0	Bool	Disturbance switchoff

Function Block	Input	Value	Data Type	Description
IDF1DOP-01	FINT	0	Bool	Disturbance intervention
IDF1DOP-01	I1	Connected	Bool	Input boolean
IDF1DOP-01	I2	Connected	Bool	Input boolean
IDF1DOP-01	I3	Connected	Bool	Input boolean
IDF1DOP-01	**I4**	**0**	**Bool**	**Input boolean**
IDF1DOP-01	IC0	Connected	Bool	Control 0
IDF1DOP-01	IC1	Connected	Bool	Control 1
IDF1DOP-01	INHI	Connected	Bool	Lock mode switchover
IDF1DOP-01	LINT	0	Bool	Local intervention
IDF1DOP-01	**MAN**	**0**	**Bool**	**Manual**
IDF1DOP-01	OPEX	00000000	Bool	Boolean logic extern.
IDF1DOP-01	**P0**	**0**	**Bool**	**Protection 0**
IDF1DOP-01	P1	Connected	Bool	Protection 1
IDF1DOP-01	**PARA**	**00000074**	**Bool**	**PBool**
IDF1DOP-01	R0	Connected	Bool	Release 0
IDF1DOP-01	**R1**	**1**	**Bool**	**Release 1**
IDF1DOP-01	TEST	0	Bool	Test position
IDF1DOP-01	**TMO0**	**0:00:20.000**	**Duration**	**Monitoring time 0**
IDF1DOP-01	**TMO1**	**0:00:20.000**	**Duration**	**Monitoring time 1**

Table 1.4 Parameters of Function Block PC_B_HVFO_1

1.4.2 IO Modules

PC_B_HVFO_1

Function Block	Input	Value	Data Type	Description
BOUT1-00	SUV	0	Bool	Substitute value definition
BOUT1-00	SUV_ON	1	Bool	Substitute value on
BOUT1-00	T1IV	0:00:01.500	Duration	Del. time from INV to valid

Table 1.5 Parameters of IO Module PC_B_HVFO_1

PC_B_HVFO_1

Function block	Input	Value	Data type	Description
NAMUREX-00	EBMO	1	Integer	Line break monitoring
NAMUREX-00	EBMO	1	Integer	Line break monitoring

Table 1.6 Parameters of IO Module PC_B_HVFO_1

1.4.3 Diagram Output References / Signal Parameters

PC_B_HVFO_1

Signal	Data Type	Value High	Value Low	Alarm Template	Archive Template
O01	BINARY	No Fault			
O02	BINARY	Protection 1	Release		
O03	BINARY	Control 1			
O04	BINARY	Control 0			
OAUT01	BINARY	Automatic			
OC1_01	BINARY	Command 1			
OCER01	BINARY	Fault			
OE0_01	BINARY	Feedback 0			
OE1_01	BINARY	Feedback 1			
OMAN01	BINARY	Manual		VM02	
STA01	PACKED	Status 1			
STA02	PACKED	Status 2			

Table 1.7 Signal Parameters of PC_B_HVFO_1

PC_B_HVFO_1V

Signal	Data Type	Value High	Value Low	Alarm Template	Archive Template
O01	BINARY	Protection 1	Release		

Table 1.8 Signal Parameters of PC_B_HVFO_1V

1.5 Additional Information

- The substitute value strategy (LOW, HIGH or actual value (hold last valid value)) is defined in the quality tab from the input configuration of the connector “E0” and “E1” for the function block IDF1DOP-01.
- The signal quality (Negate/inverted) is defined in the quality tab from the input configuration of the connector “E0” and “E1” for the function block IDF1DOP-01.

1.6 Performance of the function module in a fault scenario

In a fault scenario the module will generate an alarm/event and the function diagram output reference “OCER01” will be set to true.

2. Document References

Ref.	Document title	Document number
/1/	System 800xA PC Toolkit Library for Melody – Operation, User Manual	3BDA033439R5101EN
/2/	System 800xA PC Toolkit Library for Melody – Installation and Configuration, User Manual	3BDA033456R5103EN
/3/	S+ Engineering Function Blocks Operation	2VAA000580-530
/4/	S+ Control – Melody – Binary Input	2VAA000595-100
/5/	S+ Control – Melody – Binary Output	2VAA000596-100
/6/	S+ Engineering: Function Blocks Analog / Binary	2VAA000571-530
/7/	S+ Engineering: Function Blocks Binary	2VAA000572-530
/8/	S+ Engineering: Function Blocks Actuator	2VAA000575-530

Table 2.1 References

3BDA033930R5101EN_FD_PC_B_HVFC_1 Germany Jul 2011

Copyright © 2011 by ABB. All Rights Reserved
® Registered Trademark of ABB.
™ Trademark of ABB.

BU Oil, Gas and Petrochemical
Frankfurt, Germany
www.abb.com/chemicals