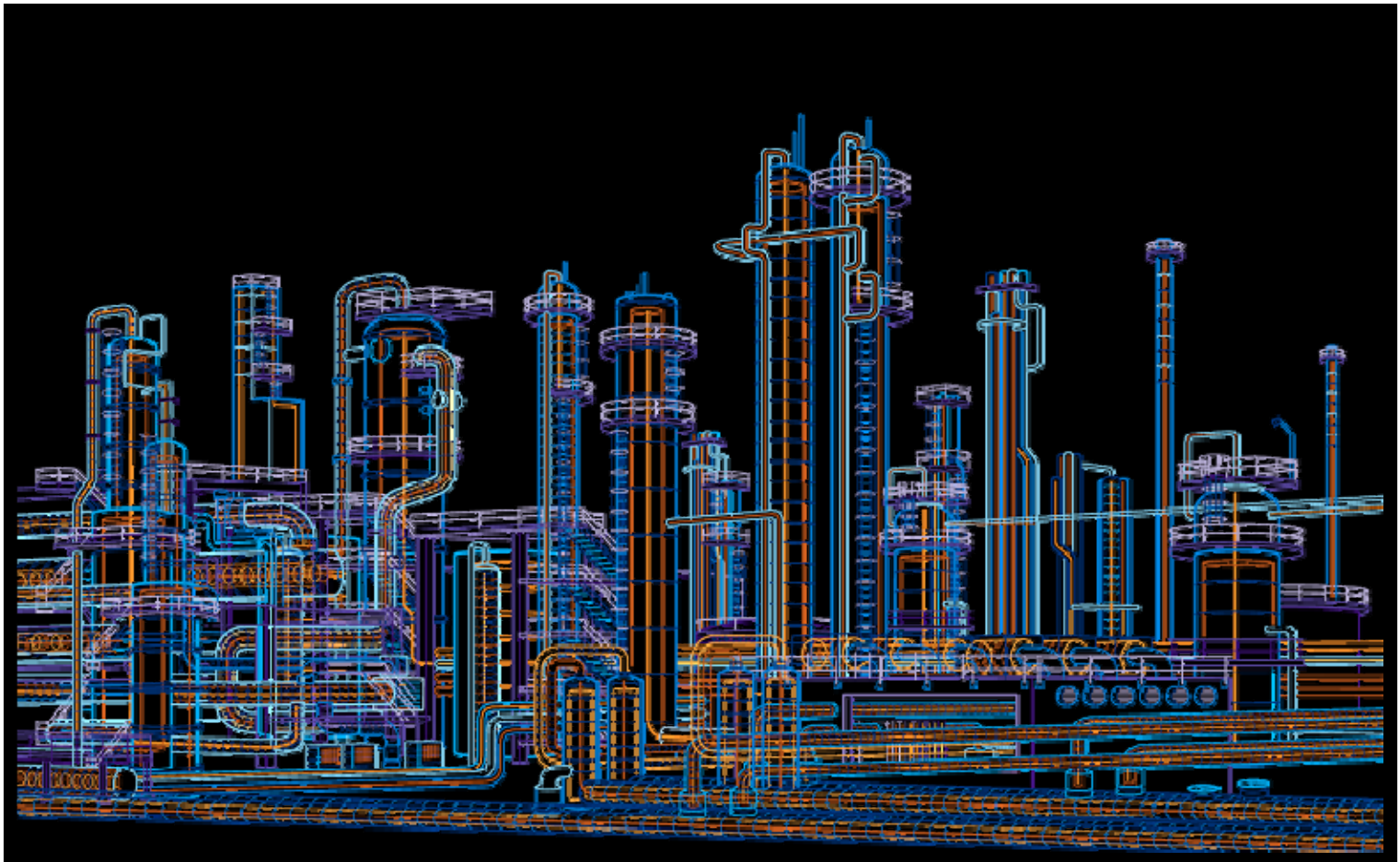

System 800xA
PC Toolkit Library for Melody
Function Diagram Template - PC_AI_1
User Manual

System Version 5.1

Power and productivity
for a better world™

Purpose

The purpose of this document is to describe the features and functionality of the function diagram template for an analog input. This document will define the ABB Control System standards for the implementation of the Toolkit specification to be adopted across all sites and on all plants.

Conditions

The System Extension supports System 800xA System Version 5.1 or higher.

Notice

This document contains information about one or more ABB products and may include a description of or a reference to one or more standards that may be generally relevant to the ABB products. The presence of any such description of a standard or reference to a standard is not a representation that all of the ABB products referenced in this document support all of the features of the described or referenced standard.

This document and parts thereof must not be reproduced or copied without written permission from ABB, and the contents thereof must not be imparted to a third party nor used for any unauthorized purpose.

Trademarks

All rights to copyrights, registered trademarks, and trademarks reside with their respective owners.

Copyright © 2011 by ABB.

All rights reserved.

Release: 2011-06-30

Document Number: 3BDA033930R5101EN_FD_PC_AI_1

Table of contents

1. Function 4
1.1 General Functional Description 4
1.2 Used Blocks 4
1.2.1 Function Blocks 4
1.2.2 Diagram Output References 5
1.2.3 I/O Modules 5
1.2.4 Diagram Input References 5
1.3 Function Template 6
1.4 Configurable Parameters 8
1.4.1 Function Blocks 8
1.4.2 IO Modules 10
1.4.3 Diagram Output References / Signal Parameters 10
1.5 Additional Information 11
1.6 Performance of the function in a fault scenario 11
2. Document References 12

1. Function

1.1 General Functional Description

The function diagram template PC_AI_1 realizes the monitoring of an analog signal in the process control system. Typically the input signal is provided from an analog board (e.g. 4-20mA, resistance thermometer, etc…) or it may already be available as a digital signal. The template covers the following main functionality:

- Display of the measuring signal at the input card with its measurement range and engineering unit
- Supervision of the input signal for faults (e.g. short circuits, line break, board error, channel error, etc…)
- In case of an error or fault condition, a substitute value may be used. Three substitute value strategies are available:
  1. The input value is written to the output value, no default value handling
  2. The last valid value at the input is written to the output and retained
  3. The output value is set to a preconfigured/substitute value
- Supervision of the signal against an operating range (Limit ALD, Limit AHD), two low (Limit L, Limit LL) and two high (Limit H, Limit HH) limits. Whenever a limit is violated, an alarm/event is generated (depending on the alarm/event configuration)
- En-/Disabling alarms via logic
- Inhibiting limit supervision output for further processing via logic
- Manipulating the output value of the module via faceplate (using alternative value)
- Filtering of the input signal

1.2 Used Blocks

1.2.1 Function Blocks

Function Block	Name	Library	Description
ANMONL-00	PC_AI_1	Analog	Analog monitoring function large Function Block description see /7/ Operation description see /1/
IVDEC-R0	PC_AI_1	Analog/Binary	Invalid decoder Real
IVCOD-R0	PC_AI_1	Analog/Binary	Invalid coder Real
OR-B0	PC_AI_1	Binary	OR Boolean
BSFUP_P	PC_AI_1		Bit select function diagram
AND-B0	PC_AI_1	Binary	AND Boolean
CONPSRC	PC_AI_1	Connectors	Connector source
CONPSNK	PC_AI_1	Connectors	Connector sink

Table 1.1 Function Blocks

1.2.2 Diagram Output References

Signal	Data Type	Description
AHDY01	LIMIT	Analog Input Module
AHHY01	LIMIT	Analog Input Module
AHY01	LIMIT	Analog Input Module
ALDY01	LIMIT	Analog Input Module
ALLY01	LIMIT	Analog Input Module
ALY01	LIMIT	Analog Input Module
O01	BINARY	Analog Input Module
O02	BINARY	Analog Input Module
O03	BINARY	Analog Input Module
O04	BINARY	Analog Input Module
O05	BINARY	Analog Input Module
O06	BINARY	Analog Input Module
O07	BINARY	Analog Input Module
O08	BINARY	Analog Input Module
O09	BINARY	Analog Input Module
O10	BINARY	Analog Input Module
O11	BINARY	Analog Input Module
O12	BINARY	Analog Input Module
O13	BINARY	Analog Input Module
XSTA01	PACKED	Analog Input Module
Y01	ANALOG	Analog Input Module
Y02	ANALOG	Analog Input Module

Table 1.2 Function Diagram Output References

1.2.3 I/O Modules

Function Block	Name	Library	Description
2WEX-00	PC_AI_1	I/O	HW in analog Ex (CAI10Ex) 2 wire

Table 1.3 I/O Modules

1.2.4 Diagram Input References

No diagram input references used in this function diagram template.

1.3 Function Template

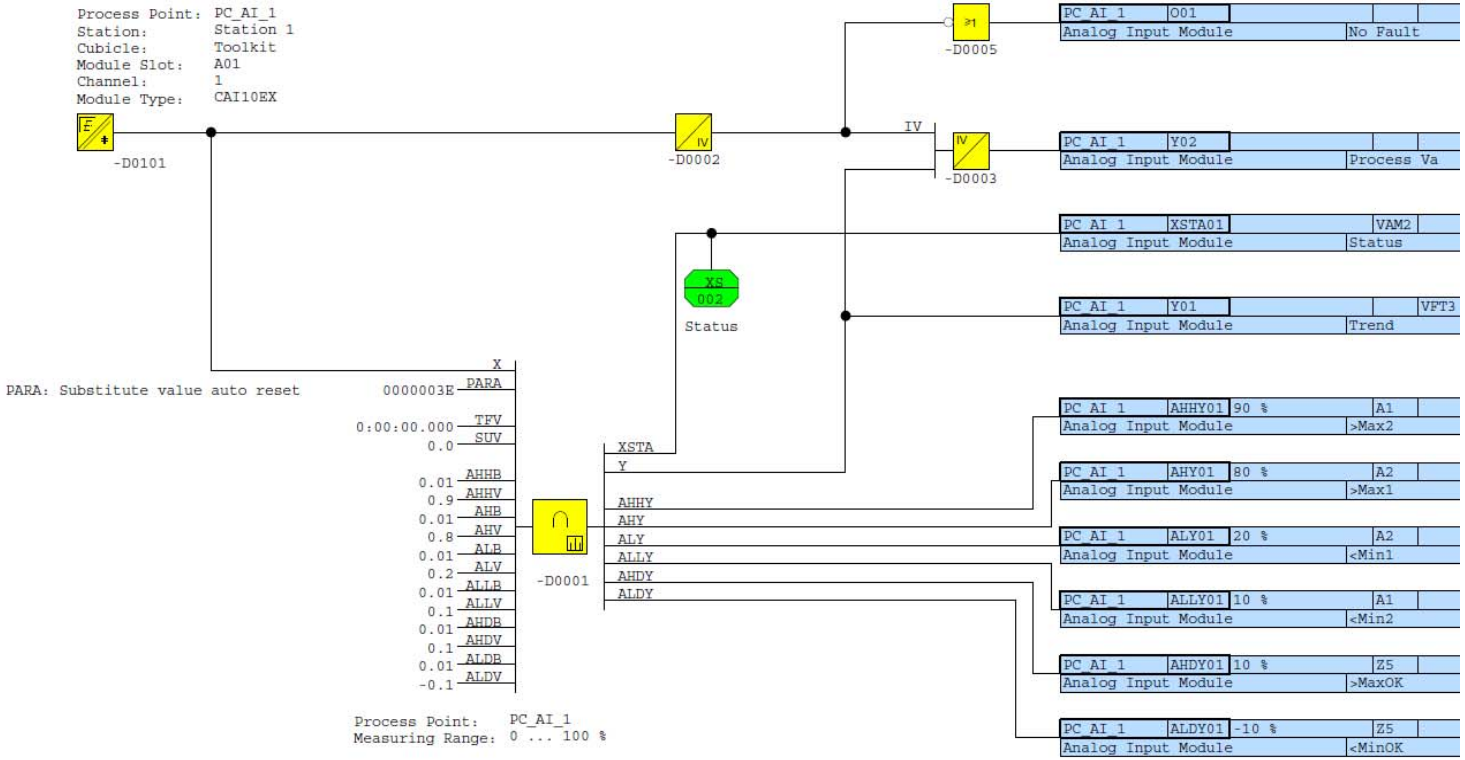

Figure 1.1 Function Template PC_AI_1 Page (1/2)

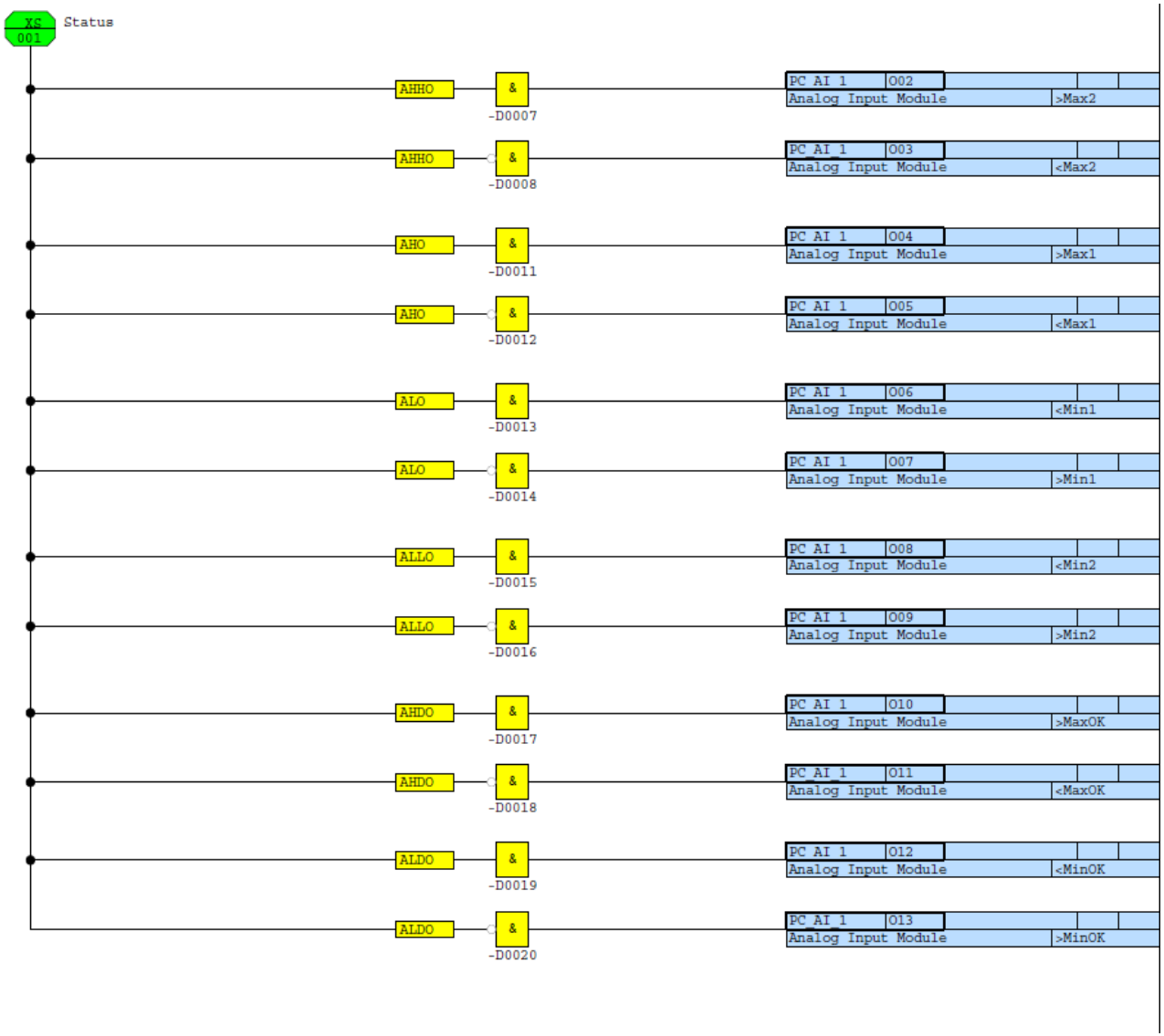

Figure 1.2 Function Template PC_AI_1 Page (2/2)

1.4 Configurable Parameters

The following parameters are in the function diagram template and can be engineered using Excel sheet data mechanisms.

In general function block parameters and signals can be exported to Excel sheet and can be engineered and imported.

1.4.1 Function Blocks

The visible and not connected parameters in the function diagram template are in **Bold**.

PC_AI_1

Function Block	Input	Value	Data Type	Description
ANMONL-00	X	Connected	Real	Input Real
ANMONL-00	**AHB**	**0.01**	**Real**	**H-limit hysteresis**
ANMONL-00	AHD	0	Bool	Disable H-limit
ANMONL-00	**AHDB**	**0.01**	**Real**	**H-tolerance hysteresis**
ANMONL-00	AHDD	0	Bool	Disable H-tolerance limit
ANMONL-00	AHDS	0	Bool	H-tolerance message suppr.
ANMONL-00	**AHDV**	**0.1**	**Real**	**H-tolerance value**
ANMONL-00	**AHHB**	**0.01**	**Real**	**HH-limit hysteresis**
ANMONL-00	AHHD	0	Bool	Disable HH-limit
ANMONL-00	AHHS	0	Bool	HH-limit message suppr.
ANMONL-00	**AHHV**	**0.9**	**Real**	**HH-limit value**
ANMONL-00	AHS	0	Bool	H-limit message suppr.
ANMONL-00	AHTB	0.01	Real	H-transient hysteresis
ANMONL-00	AHTD	0	Bool	Disable H-transient limit
ANMONL-00	AHTS	0	Bool	H-transient message suppr.
ANMONL-00	AHTV	1.0	Real	H-transient value
ANMONL-00	**AHV**	**0.8**	**Real**	**H-limit value**
ANMONL-00	AKFR	0	Bool	Reset access lock
ANMONL-00	AKFS	0	Bool	Set access lock
ANMONL-00	**ALB**	**0.01**	**Real**	**L-limit hysteresis**
ANMONL-00	ALD	0	Bool	Disable L-limit
ANMONL-00	**ALDB**	**0.01**	**Real**	**L-tolerance hysteresis**
ANMONL-00	ALDD	0	Bool	Disable L-tolerance limit
ANMONL-00	ALDS	0	Bool	L-tolerance message suppr.
ANMONL-00	**ALDV**	**-0.1**	**Real**	**L-tolerance value**

Function Block	Input	Value	Data Type	Description
ANMONL-00	**ALLB**	**0.01**	**Real**	**LL-limit hysteresis**
ANMONL-00	ALLD	0	Bool	Disable LL-limit
ANMONL-00	ALLS	0	Bool	LL-limit message suppr.
ANMONL-00	**ALLV**	**0.1**	**Real**	**LL-limit value**
ANMONL-00	ALS	0	Bool	L-limit message suppr.
ANMONL-00	ALTB	0.01	Real	L-transient hysteresis
ANMONL-00	ALTD	0	Bool	Disable L-transient limit
ANMONL-00	ALTS	0	Bool	L-transient message suppr.
ANMONL-00	ALTV	-1.0	Real	L-transient value
ANMONL-00	**ALV**	**0.2**	**Real**	**L-limit value**
ANMONL-00	ATRV	0.0	Real	Transient value defin. ext.
ANMONL-00	ATV	0.951416	Real	Alternative value
ANMONL-00	BRT	0:00:00.000	Duration	Switchov. filter time const.
ANMONL-00	C1	0.0	Real	Offset
ANMONL-00	CUT	0.05	Real	Threshold square root extr.
ANMONL-00	HV	1.05	Real	H-limit reached
ANMONL-00	IV	0	Bool	Invalid
ANMONL-00	K1	1.0	Real	Weighting factor K
ANMONL-00	LV	-0.05	Real	L-limit
ANMONL-00	MDO	00000000	Packed Bool	Oper. word operation
ANMONL-00	**PARA**	**0000003E**	**Packed Bool**	**PBool**
ANMONL-00	**SUV**	**0.0**	**Real**	**Substitute value**
ANMONL-00	TFB	2.0	Real	Linear range NIFIL
ANMONL-00	**TFV**	**0:00:00.000**	**Duration**	**Filter time constant**
ANMONL-00	TRT	0:00:05.000	Duration	Transient reset delay
ANMONL-00	TRV	2.0	Real	Transient value
ANMONL-00	W	0.0	Real	External set point
ANMONL-00	XAC1	0.0	Real	Aux. variable offset
ANMONL-00	XAF1	0	Bool	Selection comp. function
ANMONL-00	XAK1	1.0	Real	Aux. variable gain
ANMONL-00	XAX1	0.0	Real	Input aux. variable
ANMONL-00	XX1	0.0	Real	Coordinate X
ANMONL-00	XY1	0.0	Real	Coordinate Y

Table 1.4 Parameters of Function Block PC_AI_I

1.4.2 IO Modules

PC_AI_1

Function Block	Input	Value	Data Type	Description
2WEX-00	HV	1.1001	Real	Max. threshold
2WEX-00	LINR	1.0	Real	Linear range
2WEX-00	LV	0.149902	Real	MIn. threshold
2WEX-00	NLF	1	Integer	Non-linear filter
2WEX-00	TF1	0:00:02.000	Duration	Filter Time constant
2WEX-00	TOLB	0.00976562	Real	Tolerance band

Table 1.5 Parameters of IO Module PC_AI_1

1.4.3 Diagram Output References / Signal Parameters

PC_AI_1

Signal	Data Type	Value High	Value Low	Alarm Template	Archive Template
AHDY01	LIMIT	>MaxOK	<MaxOK	Z5	
AHHY01	LIMIT	>Max2	<Max2	A1	
AHY01	LIMIT	>Max1	<Max1	A2	
ALDY01	LIMIT	<MinOK	>MinOK	Z5	
ALLY01	LIMIT	<Min2	>Min2	A1	
ALY01	LIMIT	<Min1	>Min1	A2	
O01	BINARY	No Fault	Fault		
O02	BINARY	>Max2			
O03	BINARY	<Max2			
O04	BINARY	>Max1			
O05	BINARY	<Max1			
O06	BINARY	<Min1			
O07	BINARY	>Min1			
O08	BINARY	<Min2			
O09	BINARY	>Min2			
O10	BINARY	>MaxOK			
O11	BINARY	<MaxOK			
O12	BINARY	<MinOK			
O13	BINARY	>MinOK			

Signal	Data Type	Value High	Value Low	Alarm Template	Archive Template
XSTA01	PACKED	Status		VAM2	
Y01	ANALOG	Trend			Fast_7d
Y02	ANALOG	Process Va			

Table 1.6 Signal Parameters of PC_AI_1

1.5 Additional Information

- The substitute value strategy is realized in the function block using the input “PARA” (hold last valid value or substitute value with auto reset).
- In addition to them an alternative value can be activated independent from the invalidity status of the function.
- In the input configuration of “X” and in the tab quality a substitute value (actual value or a fixed value) can be defined.

1.6 Performance of the function in a fault scenario

In a fault scenario the module will generate an alarm/event and the function diagram output reference “O01” will be set to true.

2. Document References

Ref.	Document title	Document number
/1/	System 800xA PC Toolkit Library for Melody – Operation, User Manual	3BDA033439R5101EN
/2/	System 800xA PC Toolkit Library for Melody – Installation and Configuration, User Manual	3BDA033456R5103EN
/3/	S+ Engineering Function Blocks Operation	2VAA000580-530
/4/	S+ Control – Melody – Analog Input	2VAA000592-100
/5/	S+ Engineering: Function Blocks Analog / Binary	2VAA000571-530
/6/	S+ Engineering: Function Blocks Binary	2VAA000572-530
/7/	S+ Engineering: Function Blocks Analog	2VAA000570-530

Table 2.1 References

3BDA033930R5101EN_FD_PC_AI_1 Germany Jul 2011

Copyright © 2011 by ABB. All Rights Reserved
® Registered Trademark of ABB.
™ Trademark of ABB.

BU Oil, Gas and Petrochemical
Frankfurt, Germany
www.abb.com/chemicals