NOTES:

1. WARNING
   Using a non-factory RS232 data cable may result in damage and may void system warranty.
2. All installations in hazardous locations must comply with requirements of certification Drawing 2015246-CD.
3. In Switched Power configuration as shown, the Power Scheduler must be used.

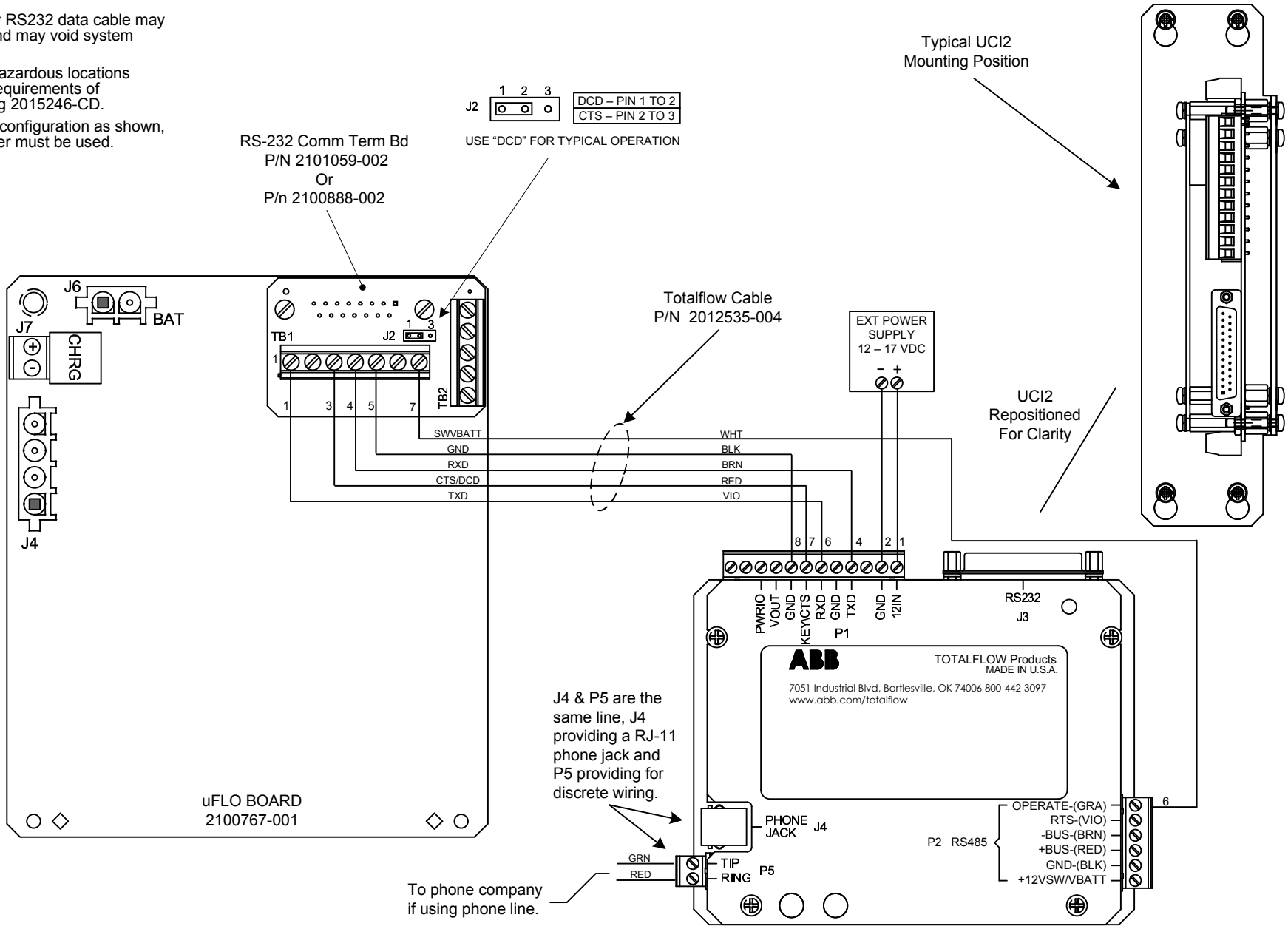

REF: 2101058-WI

ABB TOTALFLOW Products	ACTION	DOC TYPE	TITLE	DWG NO.	REV	SHEET
	D19345	UD	UFLO W/ RS-232 COM TERM BD TO UCI2 W/ EXTERNAL SWITCHED PWR	2101722	AB	1 OF 1