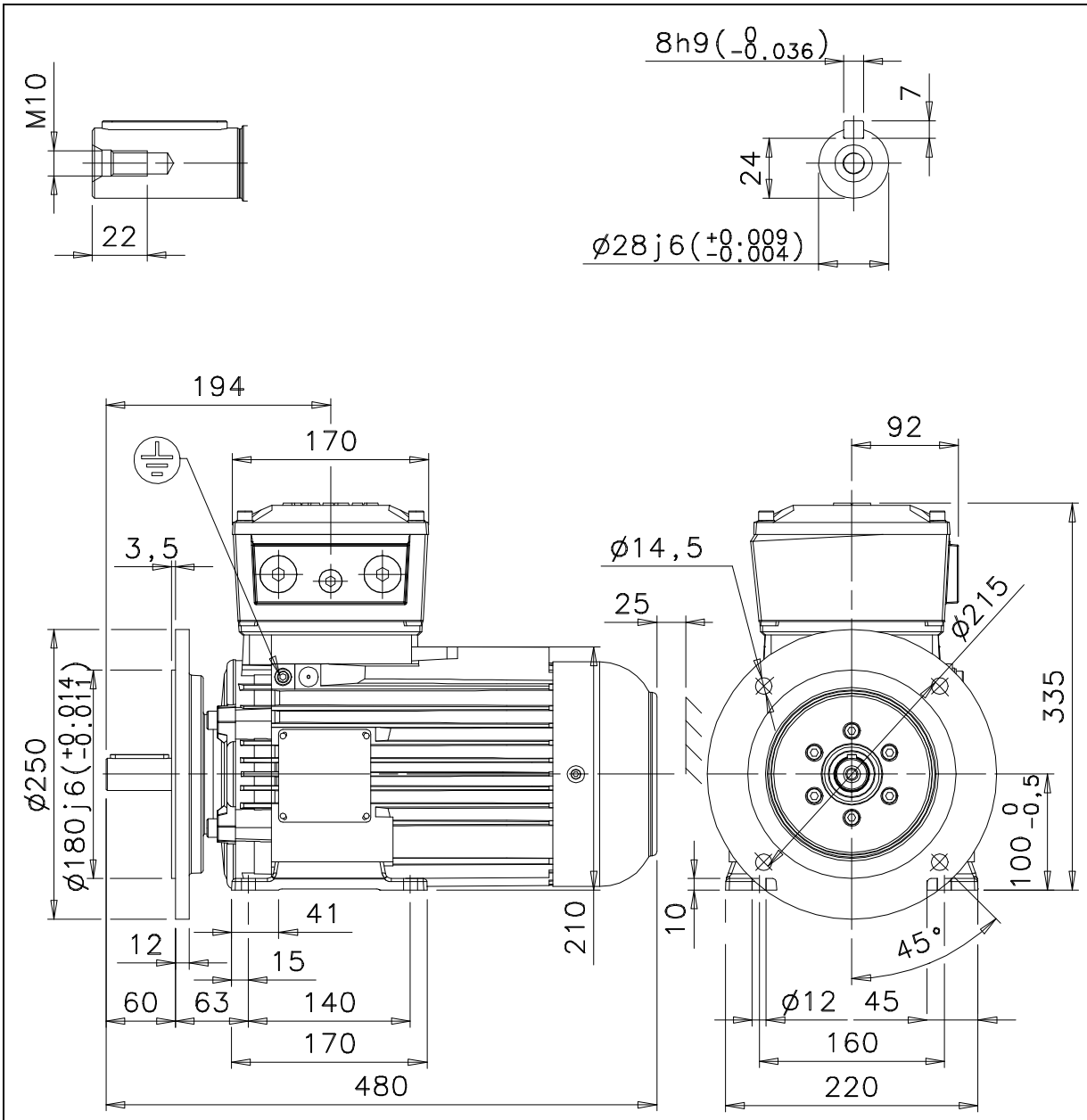

Additional information:

Dimension Print	Motor Type: M3JP 100L_2-8, B35, V36, FF215	Document No: 3GZF500210-55 A 13 JP 100 A
Description: STANDARD SQUIRREL CAGE MOTOR		

Unit:	ABB Oy, Motors and Generators	Issued by:	R.Ketonen	Replaces:
Date:	20.01.2011	Approved by:	P.Viitanen	Replaced by:

ABB Oy	Customer Reference:	ABB