BBC
BROWN BOVERI

Low-Oil-Volume Circuit-Breaker

Typ SBK 36 mc 1000
SBK 36 n 1500

Publication No. AG 90242 E

Instructions for erection and operation

Contents

Notice 1

Based on our own experience, you will obtain the best possible operational reliability from our equipment by following the recommendations given in these Instructions.
The data contained herein purports solely to describe the product and is not a warranty of performance or characteristics. It is with the best interests of our customers in mind that we constantly strive to improve our products and keep them abreast of advances in technology. This may, however, lead to discrepancies between a product and this Instruction.

Notice 2

Within the scope of these Instructions, it is impossible to take into account every possible eventuality which may arise with technical equipment in service. Please consult our local agents in the event of any irregularities, especially if not referred to herein.

Notice 3

We expressly decline liability for any damages resulting from any incorrect operation or wrong handling of our equipment, even if these Instructions contain no specific indication in this respect. We lay particular stress on the fact that only genuine spare parts should be used for replacements.

Notice 4

Without our written consent it is not permissible to disclose, reprint, copy or reproduce any part of these Instructions.

Printed in Switzerland (7301-100-1) Mod. A
Classification-No. 040210

Instructions for Erection and Operation

Low-Oil-Volume Circuit-Breakers with Spring Operating Mechanism

Type SBK 36 mc 1000
Type SBK 36 n 1500

Contents:

B R O W N B O V E R I

I.1973

AG 90242 E

Printed in Switzerland

Low - Oil - Volume Circuit-Breakers with Spring Operating Mechanism

Type SBK 36 mc 1000

Type SBK 36 n 1500

1. General

The type SBK low-oil-volume circuit-breaker with spring operating mechanism is simple, reliable and quick-acting. It is used for on - load circuit-breaking in high voltage installations.

It is intended for indoor operation and is available for a rated voltages of 36 kV at a rated current of 1250 A, and a breaking capacity of 1000 MVA.

Models available

Type SBK is for fixed installation in an open cell.

Type SBKJ is intended for installation in metalclad switchgear units. It is removable and fitted with plug-in contacts.

2. Technical Data

Breaker Type		SBK 36 mc 1000	SBK 36 n 1500
Rated Voltage	kV	30/36	30/36
Rated breaking capacity	MVA	1000	1500
Rated current	A	1250	1600
Rated frequency	c/s	50/60	50/60
Rated breaking current	kA_{RMS}	19,2/16	29/24
Rated making current	kA_{PEAK}	49/41	74/61
Short-time current (1 s)	kA	19,2	29
Impulse test Voltage 1,2/50 us	kV_{PEAK}	170	170
Power frequency test Voltage (50 c/s, 1 min)	kV	75	75

3. Construction

a) Breaker Pole

Each breaker has its own interrupter chamber. All three poles of a triple-pole breaker are arranged vertically and are mounted on supports 48a and 48b (Fig. 2)

The interrupter chamber cylinder 12 (Fig. 2 and 7) carries the breaker pole and is made of glassfibre-reinforced epoxy resin. It also carries the connecting flanges 12n and 12 l (Fig. 2) which, on the one hand, connect the current flow path from the pole to the busbars and, on the other, permit assembly of the breaker pole to the operating mechanism through the moulded resin rod insulators 11. The operating mechanism housing 19 is fixed to the lower connecting flange 12 l (Fig. 2). This houses the parts required for operating the switch rod, the switch rod itself 18 (Fig. 7d), the roller contact 17g (Fig. 7b) and the guide tube 20. The switch rod has a replaceable tip at the upper end 18a (Fig. 7d). It is somewhat tapered at the lower end and is damped by the oil-filled guide tube 20 as the circuit is broken. The guide tube 20 also serves as oil drain plug. The roller contact 17g is a following, low-friction type contact which guarantees a constant current flow from the lower connecting flange 12 l through the mechanism housing 19 to the switch rod 18 (Fig. 7d). The contact retainer 13 is situated on the upper connecting flange 12n (Fig. 2 and 7). It carries the static contact which consists of several fingers 14c in the shape of a tulip. The upper connection forms the pressure equalising chamber 15 (Fig. 2 and 7d), which is fitted with an oil level inspection window 15c (Fig. 2, 3 and 7d) and an oil separator 16.

The breaker can be fitted with three primary relays as shown in Fig. 3. The construction is such that all necessary inspections and maintenance of the interrupter chamber can be carried out without removing the relays.

b) Operating Mechanism

The circuit-breaker is fitted with a spring oparating mechanism which, apart from the normal open-close cycle, also allows for open - close - open auto-reclosing cycles when used in conjunction with a reclosing relay. The operating mechanism can be preloaded either by hand or with a motor. It consists of the following sub-assemblies:

The control unit 31 (Fig. 9) with mechanical and electrical trip mechanism; interlock 24 (Fig. 9) and tensioning device; spring operator 27d-g (Fig. 6 and 8) for opening and closing the circuit; the hand and motor-driven preloading mechanism 25 / 30 (Fig. 6) with ratchet and pawl; differential gearing and chain for loading the energy store 21n (Fig. 6 and 8); drive shaft with cams 21d; auxiliary switch 29 (Fig. 6); indicator and terminal strip 52 (Fig. 6); additional "On" spring 28u, 28v (Fig.9)(only for the type 36 n 1500) .

4. Principle

Fig. 7d shows a breaker pole in the open position. The active part of the pole is submerged in oil. When the circuit is opened, the switch rod 18 (Fig. 7d) is withdrawn very rapidly from the quenching chamber. Arcing occurs between the moving contact and the tulip shaped fixed contact 14c (Fig.7) which evaporates some of the oil. The quenching chamber 12 is divided into cells which ensure that the gas bubbles cannot expand and that the evaporation surface is confined to the immediate vicinity of the arc. The arc is rapidly cooled

and extinguished by the generation of gas and the intensive oil flow. The energy generated in opening the circuit is absorbed by the damping effect of the oil-filled sleeve 20 at the end of the travel.

Important! The breaker must not be operated unless there is sufficient oil in the interrupter chamber as otherwise the quenching system can not function properly and the breaker could suffer damage on opening the circuit.

(See instruction plate on the side of the breaker which states: Do not operate without oil!)

a) Switching operation

The necessary energy for opening the breaker is provided by the spring operating mechanism 27d-g (Fig. 6 and 9). As previously stated, the energy in the springs is sufficient for an autoreclosing cycle (open-clos-open). The springs 27 d-g exert a constant pressure upon the pinion 21z (Fig. 8) during the switching operation through the chain 21n and cam 21h shown (Fig. 6 and 8). The pinion is in mesh with two bevel gears. The right-hand gear 21i (Fig. 6) is mounted on the shaft by a roller bearing and its sole purpose is for loading the springs 27 d-g by means of the motor 30 or the crank handle 25g. The left-hand bevel gear 21 g transmits the torque to the drive shaft 21a (Fig. 6, 8 and 9), and the potential energy is stored by the cam 21c (Fig. 9). The breaker is opened or closed by rotating the switch shaft 28 through approximately 50° which releases the cam 21c on the drive shaft 21 (Fig. 6, 8 and 9) from the locking device, allowing it to engage with the operator 22. The power for the switch rod 18 (Fig. 7) is transmitted through the cam 21d to the switch shaft 28 and the switch rods 28h through the linkage to the switch rod 18 (Fig. 7).

b) A closing signal, given through the push-button 31b or the magnet 32 in the control unit 31, actuates the release pawl 31a (Fig. 6 and 9) which in turn releases the retaining pawl 31h at the control unit power source (Fig. 9). This consists of a toggle joint 31d and 31e and the intermediate springs 31f which throws the lever 31g downwards. The operator 22 (toggle joint) is released by the release rod 26 (Fig. 9).

The switch shaft 28 is rotated by the action of the springs 27d-g (Fig. 8) through the main shaft 21 and the cam 21d. The switch rod 18 (Fig. 7) is moved into the "on" position with force through the lever system by this process. The breaker is now closed.

c) For switching off

The same process is repeated from the "off" button of the control unit 31.

d) Preloading the springs by hand with the cranking handle 25g (fig. 6 and 9) requires approximately 75 turns, until the energy accumulator springs are fully loaded.

e) Preloading the springs 27d-g with the aid of the motor.
The electric motor is controlled automatically. It is switched on by the limit switch 49 (Fig. 6) as soon as the load on the springs dips below maximum and switched off again as soon as maximum load is reached again.

f) "Charge - Discharge" indicator

The indicator plate 27m (Fig. 8) only shows "charge" when the springs 27d-g are loaded to the maximum. When it shows "discharged" it indicates that the spring tension is somewhere between maximum and mimimum. It is dangerous to manipulate the mechanism or the contacts when the springs are under tension. Always ensure that springs are completely free from tension!

g) Anti-closing interlock

The control unit 31 (Fig. 9) only transmits closing signals when the springs 27d-g are adequately loaded i.e. it can cut out the signal immediately after it has been given. Closure is prevented at insufficient spring tension by the blocking device 24 (Fig. 6 and 9). This disengages the release cam 31a through a linkage. Deliberate blockage of closure for specific control purposes can be effected by the control magnets (Fig. 10e) which hold the release cam 31a out of engagement when the coil voltage fails.

h) Available models (to suit customers' requirements)

Electrical Control Components

a)	Closing magnet	d.c.	(Fig.10a)
b)	Closing magnet	a.c.	(Fig.10b)
c)	Tripping magnet (or current-transformer release)	d.c./a.c.	(Fig.10c)
d)	Second tripping magnet or current-transformer release with second release magnet		(Fig.10d)
e)	Blocking magnet to prevent closure		(Fig.10e)
f)	No-voltage release		(Fig.10f)

i) Electrical releases

These are available in various forms (see electrical control components above). The magnetic arrangements Fig. 10a, b,c, or d release through an electrical signal from an auxiliary supply.

The current-transformer trip Fig. 10c or 10d is fed by the main and auxiliary transformer, which renders auxiliary supply unnecessary.

The no-voltage trip Fig. 10f also known as closed-current trip, operates if the voltage at the coil fails.

Arbitrary remote control is blocked as shown in Fig. 10e.

5. Assembly and Operation

The breaker frame 48a/b (Fig. 1 and 2) is a bolted construction for supporting the interrupter chambers and also for fixing the complete unit (see attachement holes 47 in Fig. 3) in its various forms for outdoor installation. The power supply should be connected to the relay terminal bolts 41 (Fig. 3) or, in models without relays, to the upper terminal screws 12e (Fig. 2) and to the lower connecting screws 12m.

The wiring should be connected up in accordance with the wiring diagram packed with the breaker.

The earthing connection, which is painted yellow and (not visible in the illustrations) should be suitably earthed in accordance with the regulations in force.

Breakers are delivered in the switched-off condition.

a) Filling with oil

Before use, all three interrupter chambers must be filled with pure transformer oil of good quality and free from water, after loosening the oil separator housing bolts 16 (Fig. 1, 2 and 7). The oil should be poured in slowly until the level reaches the red spot on the inspection window 15c (Fig. 1 and 7). Each interrupter chamber requires approximately 7 litres of oil. The breaker should be tested for correct functioning under operating conditions. Several opening and closing operations should be carried out and all parts inspected for positive engagement. If the results of these tests are satisfactory, the breaker may be connected to the supply and put into operation.

6. Maintenance

All mechanical parts operate with complete reliability and are affected by dust or temperature changes under normal conditions.

Maintenance can be limited to a periodic cleaning and lubrication of the individual components, which is quite sufficient to prevent premature wear. Servicing must be carried out with the breaker in the open condition.

We recommend that the following checks and servicing be carried out:

a) Half-yearly checks

The oil level should be checked at the inspection window 15c (Fig. 1 and 7) and the oil topped up as necessary to the marked level. For filling instructions see paragraph 5a.

b) Changing the arcing contacts

The deterioration of the arcing contacts and the pollution of the oil depend to a great extent on the demands made on the breaker with respect to the breaking power and the number of switching cycles. The contacts can survive one thousand switching cycles at normal operating power (rated current). The contact life expectancy is reduced correspondingly when overloads are interrupted. It is essential to inspect the contacts for damage after four or five short-circuit interruptions. This should be carried out as follows:

1. Drain the oil from the three interrupter chambers into a clean receptacle by removing the oil drain plug 20(Fig.2 and 7d).

2. After loosening the four screws 12c (Fig. 7d), lift out the complete pressure equalising chamber 15 (Fig. 2 and 7d) and the interrupter chamber 13 (Fig. 7d).

3. The replaceable contact fingers 14c (Fig. 7a) are easily accessible after removing the interrupter chamber 13 and can, if necessary, be replaced.

4. It is recommended that the individual poles of the breaker be brought into the "closed" position which gives better accessibility to the contact tip 18a (Fig. 7d). The switch rods 28h (Fig. 2 and 6) must also be soosened. Under no circumstances may these be brought out of adjustment. Make sure, when reassembleding, that they are in exactly the same position as before.

5. The unserviceable tip 18a can be removed with an Allen key and replaced by a new one.

c) General overhaul

After draining the oil from the interrupter chambers, and apart from the work described under 6b, the four screws 12d (Fig. 2 and 7d) must also be loosened. This permits withdrawal of the active part of the pole, together with the switch rod 18, which can then be disassembled into its various component parts as shown in Fig. 7b,c and d. The reverse procedure is adopted for reassembly.

The quenching oil should also be checked, the more frequently the more often the breaker operates, and if it is found to be very polluted it should be changed. The insulating capacity of the oil is best tested in an oil testing apparatus.

The oil sample is allowed to stand for about half an hour before being subjected to the test voltage. It at a distance of 5 mm with 12,5 mm diameter spheres the oil breaks down below 10 to 15 kV, then it should be changed. The breakdown voltage of the fresh oil must be at least 40 kV.

d) Lubrication

The switching mechansim should be lubricated once a year,

or after every 1000 switching cycles, with graphite lubricating oil type BBC LM 2g or Molycote Paste Rapid. The operating mechanism in the interrupter chamber needs no lubrication as it is constantly submerged in oil. All lubricating holes marked red (on the control unit 31), as well as all joints, shaft bearings, ball bearings and gear wheels should be lubricated with the previously mentioned lubricant according to lubrication chart Fig. 11.

The graphite lubricating oil BBC 909 2g is a mineral oil with the following characteristics:

Viscosity at 20° C	30-60 centistokes
Neutralization number	0.2
Flash-point (Marcusson)	140° C
Ash content (incombustible material)	0.01 %

This oil must be carefully mixed with 5 % by weight of colloidal graphite.

7. Spare Parts

We recommend that adequate supplies of the following spare parts be carried in stock as the are subject to wear and tear or could conceivably become damaged. Considerable delays can be avoided by carrying this small stock of spares. Spare parts should be ordered from our appointed agents quoting the following details:

1. Equipment for which the spare parts are required
2. Its type designation and

3. Works serial number
   The data should be carefully noted from the identification plate.
4. Quantity required
   Description
   Item numbers of the desired spare parts (if quoted in this set of instructions)

Note:

The information required under 1, 2 and 3 must be quoted even if the order is accompanied by a sample, otherwise it is not possible to establish the exact type of apparatus. We further request that the type designation and works serial number be quoted in any correspondence associated with spare parts.

a) For the breaker pole	Item	Piece	Fig.
Arcing finger	14c2	8	7a
Arcing finger spring	14b	8	7a
Contact tip	18a	1	7d
Switch rod complete	18	1	7d
Roller cage complete	17	1	7b
Convector chamber complete	12	1	7d
Sealing ring	19k	1	7c
" "	15b	1	7a
" "	14a	1	7a
" "	13a	3	7a
Seal	20a	1	7a
"	16a	1	7a
"	19h	1	7c
b) For spring operating mechanism			
Magnet coil "ON"	32	1	10a/b
Magnet coil "OFF"	32	1	10c
Tension spring	23f	2	8/23
Motor	30	1	9

Captions to Illustrations

Fig. 1 Low-oil-volume circuit-breaker type SBK 36 mc 1000 with spring operating mechanism, viewed from the mechanism side.

Fig. 2 Low-oil-volume circuit-breaker type SBK 36 mc 1000 with spring operating mechanism, viewed from the interrupter chamber side.

Fig. 3 Type SBK 36 mc 1000, fitted with three primary relays, type HB and HT, viewed from the mechanism side.

Fig. 4 Low-oil-volume circuit-breaker, type SBKJ 36 mc 1000 mounted on a trolley for metalclad installation, viewed from the quenching chamber side. (Quenching chambers hidden by insulating covers).

Fig. 5 Type SBKJ 36 mc 1000 circuit-breaker on a trolley for metalclad installation, viewed from the mechanism side.

Fig. 6 Spring operating mechanism for low-oil-volume circuit-breaker, type SBK 36 mc 1000.

Fig. 7a, b,c & d Assembly diagrams of interrupter chamber of one pole of a type SBK 36 mc 1000 circuit-breaker.

Fig. 8 Spring operating mechanism, taken apart into its main components.

Fig. 9 Diagrammatic view of spring operating mechanism. Springs under tension. (Breaker in "OFF" position.)

Component Parts

10	Trolley
11	Supporting insulator
12	Quenching chamber insolator assembled
12a	Washer
12b	Spring washer
12c	Screw
12d	Screw
12e	Connection bolt
12f	Washer
12g	Spring washer
12h	Threaded plate
12i	Nut
12k	Screw
13	Retainer for contact fingers
13a	Sealing ring
13b	Retaining ring
13c	Steel ball
13d	Screw
13e	Spring washer
13f	Washer
14	Finger holder complete
14a	Sealing ring

14b	Springs
14c	Replaceable contact finger
15	Pressure equalizing chamber, complete
15a	Retaining ring
15b	Sealing ring
15c	Inspection window (oil level gauge)
15d	Ring
15e	Oil level graduations
16	Oil separator complete (oil filler plug)
16a	Seal
17	Roller cage complete
17a	Conducting stud
17b	Plate
17c	Plate
17d	Washer
17e	Nut
17f	Nut
17g	Roller complete
17h	Plate
17i	Screw
18	Switch rod complete
18a	Contact tip
18b	Pressure spring
18c	Switch rod
18d	Screwed ring
18e	Pin

18f	Guide
19	Mechanism housing complete
19a	Switch lever
19b	Split pin
19c	Friction disc
19d	Washer
19e	Fulcrum pin
19f	Locking key
19g	Retaining ring
19h	Seal
19i	Threaded bush
19k	Sealing ring
19 l	mechanism lever
19m	Retaining ring
19n	Spring ring
20	Guide tube complete (oil drain screw)
20a	Seal
21	Drive shaft complete
21a	Drive shaft
21b	Key
21c	Cam
21d	Cam disc complete
21e	Split pin
21f	Loading shaft
21g	Bevel gear
21h	Sprocket complete
21i	Bevel gear complete

21k	Bush
21l	Shim
21m	Clip
21n	Roller chain
21o	Split link
21p	Roller bearing
21q	Roller bearing
21r	Screw
21s	Nut
21t	Spring washer
21u	Retaining ring
21v	Washer
21w	Bastle Nut
21x	Split pin
21y	Washer
21z	Bevel pinion
22	Lock complete
22a	Link left
22b	Link right
22c	Link
22d	Lever
22e	Pin
22f	Pin
22g	Pin
22h	Pin
22i	Roller
22k	Spacer tube
22l	Spacer tube

22m	Spacer ring
22n	Stop
22o	Tension spring
22p	Washer
22q	Retaining ring
22r	Retaining ring
23	Gear complete
23a	Gear shaft
23b	Bevel pinion
23c	Bearing bush
23d	Screwed stud
23e	Peg
23f	Tension spring
23g	Nut
23h	Spring washer
23i	Locking pin
23k	Retaining ring
23l	Damper
24	Interlock complete
24a	Interlock shaft
24b	Spring washer
24c	Indicator rod
24d	Blocking rod
24e	Interlocking rod
24f	Guide
24g	Nut

24h	Spring ring
24i	Retaining ring
24n	Spring ring
25	Hand crank complete
25a	Bearing bracket
25b	Shaft
25c	Bush
25d	Bush
25e	Angle bracket
25f	Stop
25g	Crank handle
25h	Sleeve
25i	Angle
25k	Locking pin
25l	Locking pin
25m	Pressure spring
25n	Bevel gear wheel
25p	Pressure spring
25q	Bush
25r	Retaining ring
25s	Retaining ring
25t	Retaining ring
25u	Retaining ring
25v	Washer
25w	Split pin
25x	Nut

26 Release mechanism complete

26a Release rod

26b Release lever

26c Shaft

26d Sleeve

26e Shaft

26f Washer
26g Split pin

27 Spring frame, complete (with energy accumulator)

27a Spring frame

27b Pulley

27c Shaft

27d Compression spring

27e Compression spring

27f Compression spring

27g Compression spring

27h Spring plate

27i Chain retainer

27k Shaft

27l Top plate

27m Indicator plate (Charged - Discharged)

27n Indicator plate (I - O)

27o Indicator rod

27p Screw

27q Nut

27r Nut

27s Spring washer

27t Retaining ring

28	Switch rod complete
28a	Switch rod
28b	Bush
28c	Bearing bush
28d	Washer
28e	Shaft
28f	Cam
28g	Diaphragm
28h	Switch rod
28i	Adjusting bush
28k	Washer
28l	Ball bearing
28m	Cheese-head screw
28n	Peg
28o	Retaining ring
28q	Spring washer
28r	Spring washer
28s	Spring ring
28t	Spring ring
28u	Tension spring with eye
28v	Pull-rod
28w	Washer
28x	Split pin
29	Auxiliary switch
30	Motor

31	Control unit complete
31a	Release pawl
31b	Push-button "ON"
31c	Push-button "OFF"
31d	Toggle joint
31e	Toglle joint
31f	Compression spring in the control unit
31g	Lever
31h	Retaining pawl
32	Coil on/off
33	Coil
34	Armature
34a	Armature with short-circuit ring
35	Magnet armature
35a	Tension spring
36	Magnet armature
36a	Tension spring
38	Loading cam in the control unit
39	Relay loading cam
40	Cam for actuating the under-voltage trip magnet
41	Main power connection for use with primary relays
42	Primary relays, series relays, type HB
43	Primary relays, thermal relays, type HT
44	Relay - release rodding

45 Relay - release rodding

46 Relay release shaft

47 Fixing holes

48a Upper support

48b Lower support

49 Limit switch

50 Inspection cover

51 Alarm contact re-set

52 Terminal strip

53 Pole isolating housing

54 Front housing

55 Roller

56 Tulip contact

57 Push-button for illumination of oil-level indicator

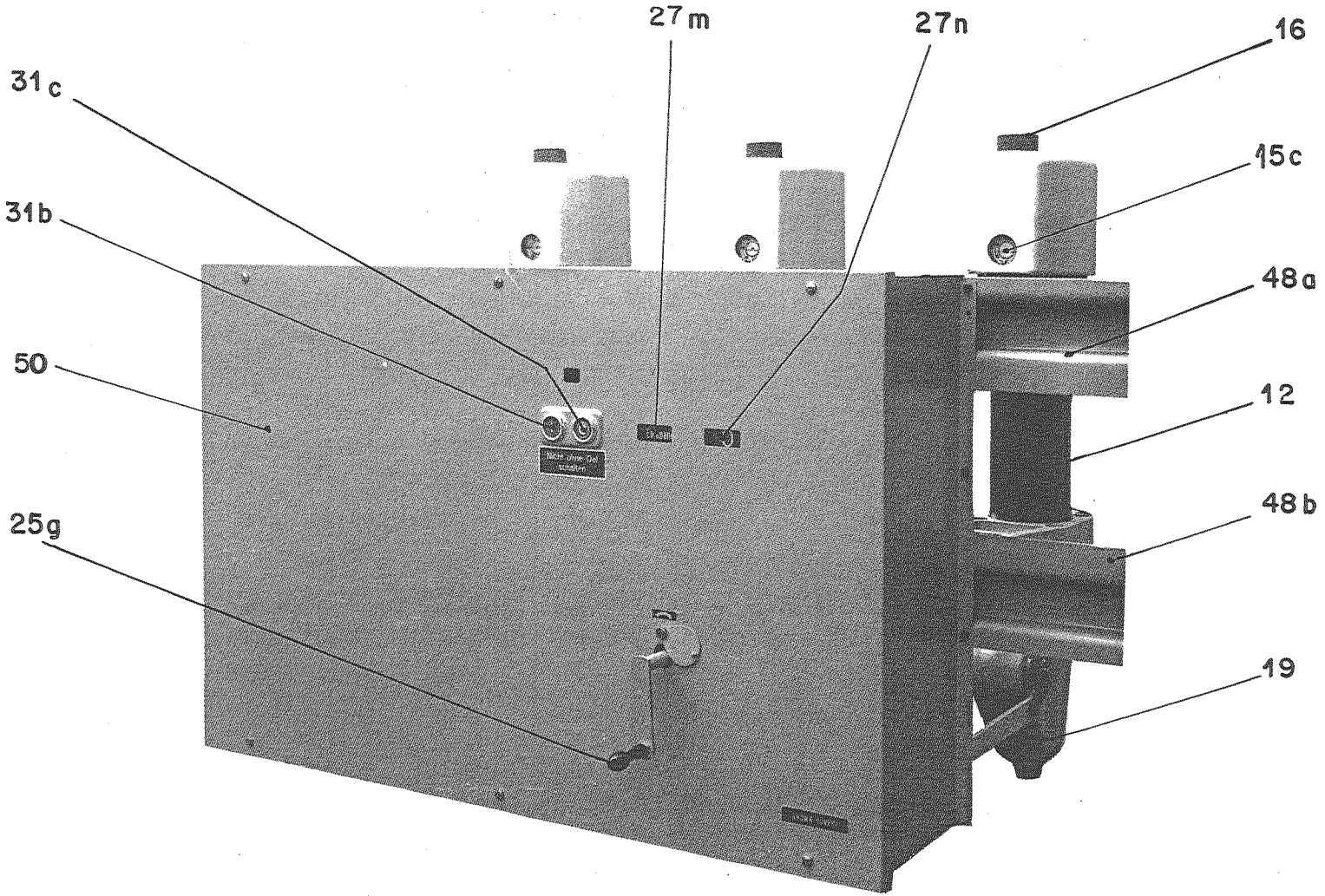

Fig.1

139984

BROWN BOVERI

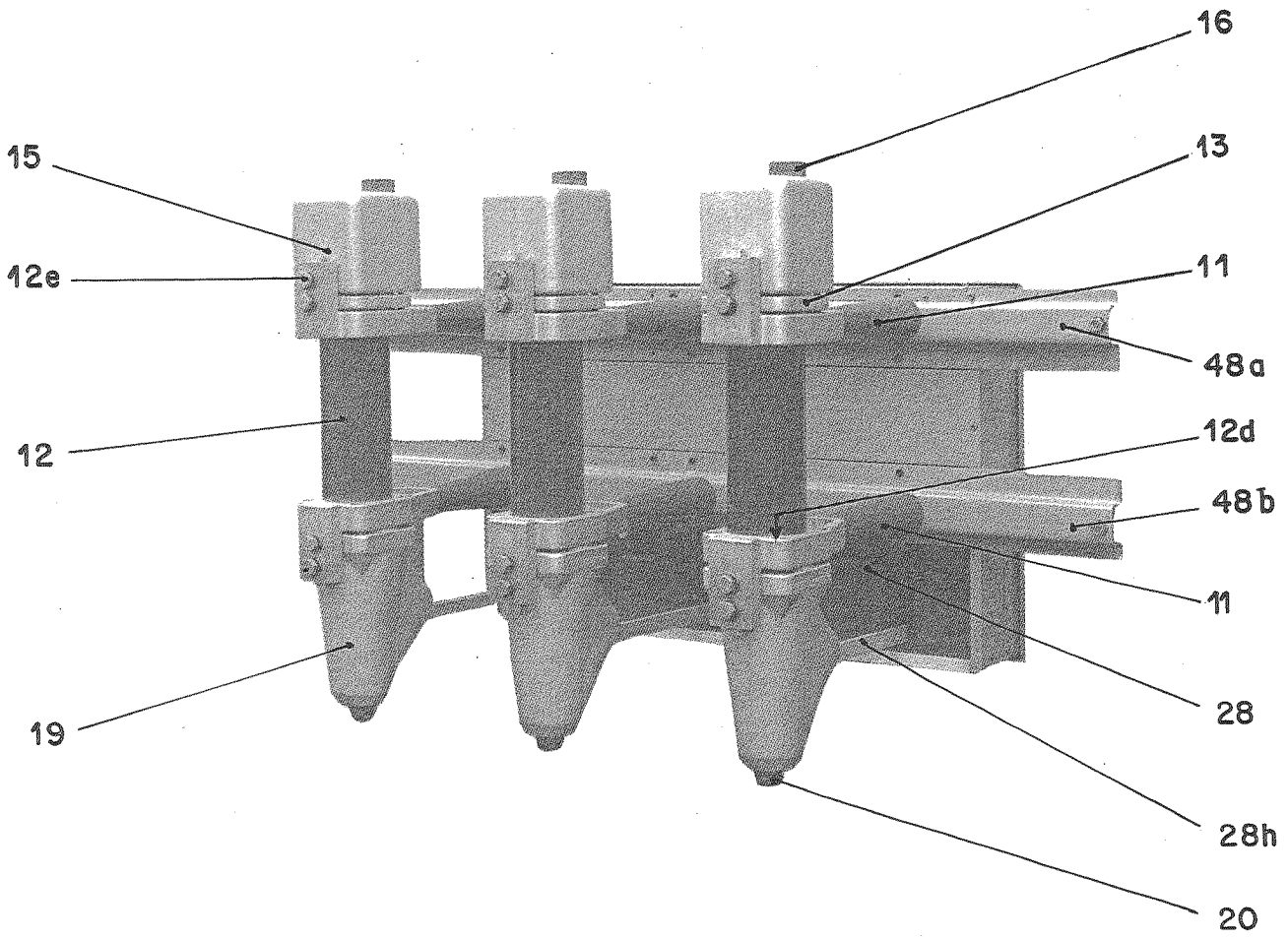

Fig. 2

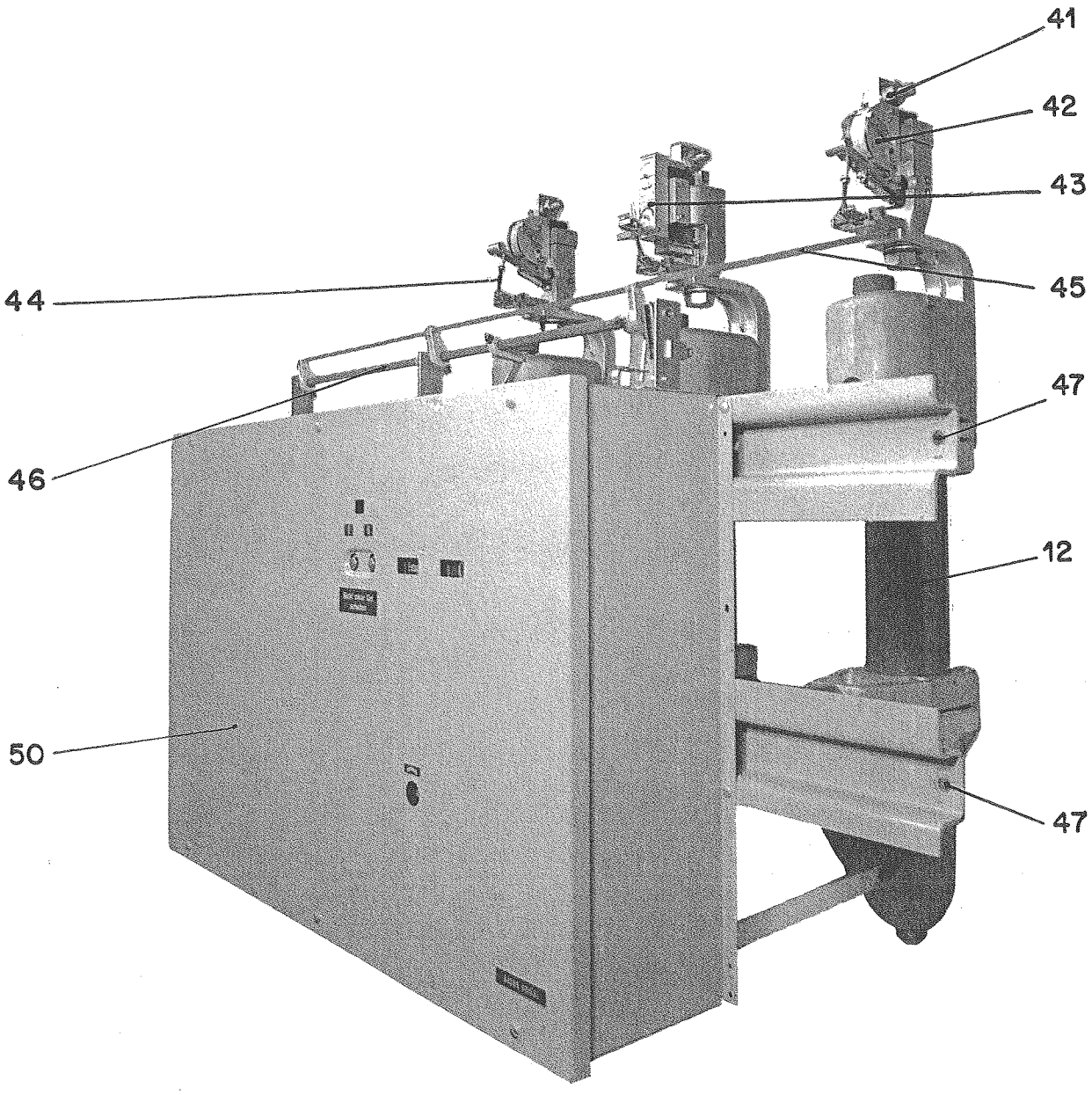

138238

BROWN BOVERI

Fig. 3

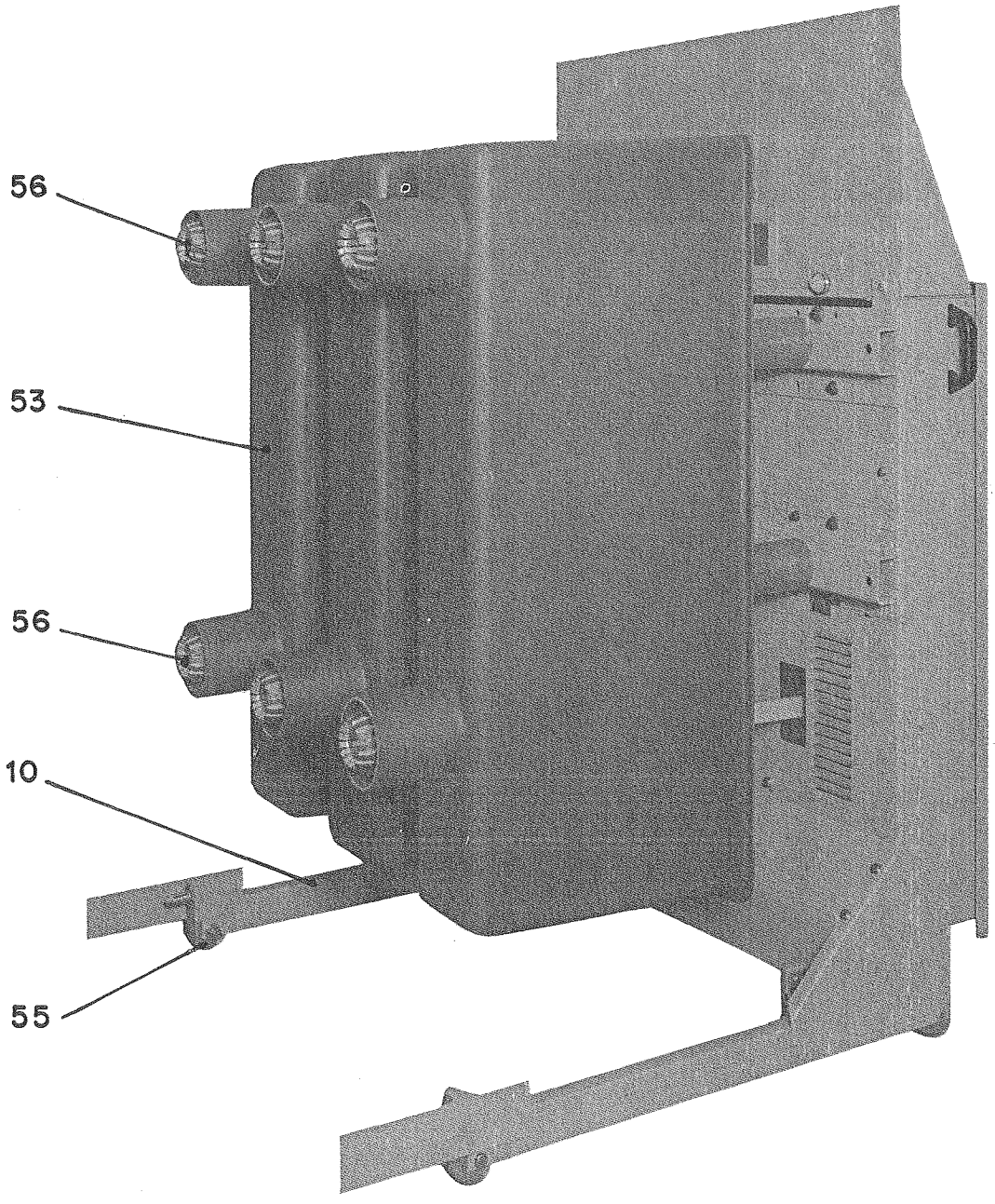

BROWN BOVERI

139983

Fig. 4

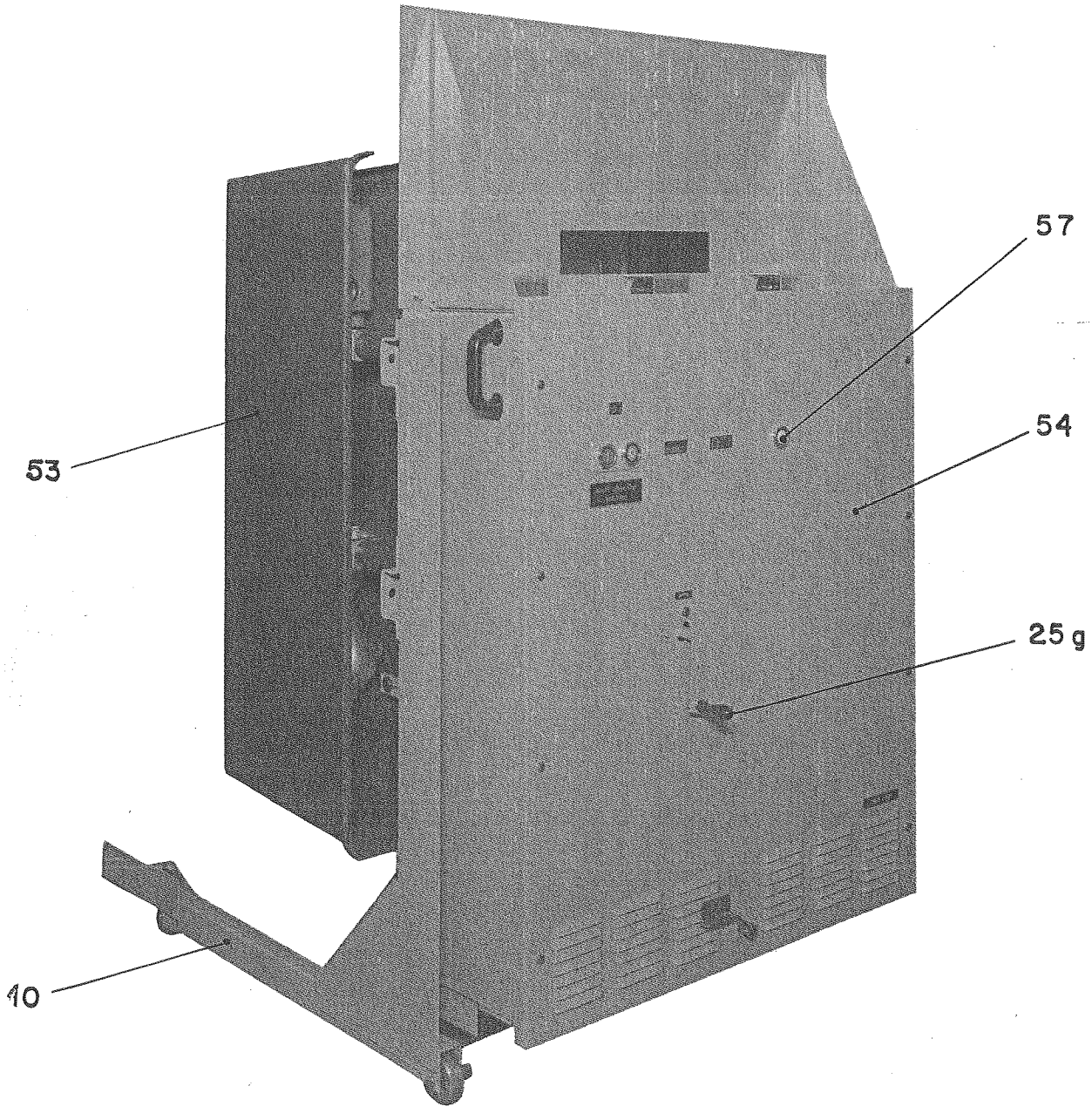

BROWN BOVERI

139982

Fig. 5

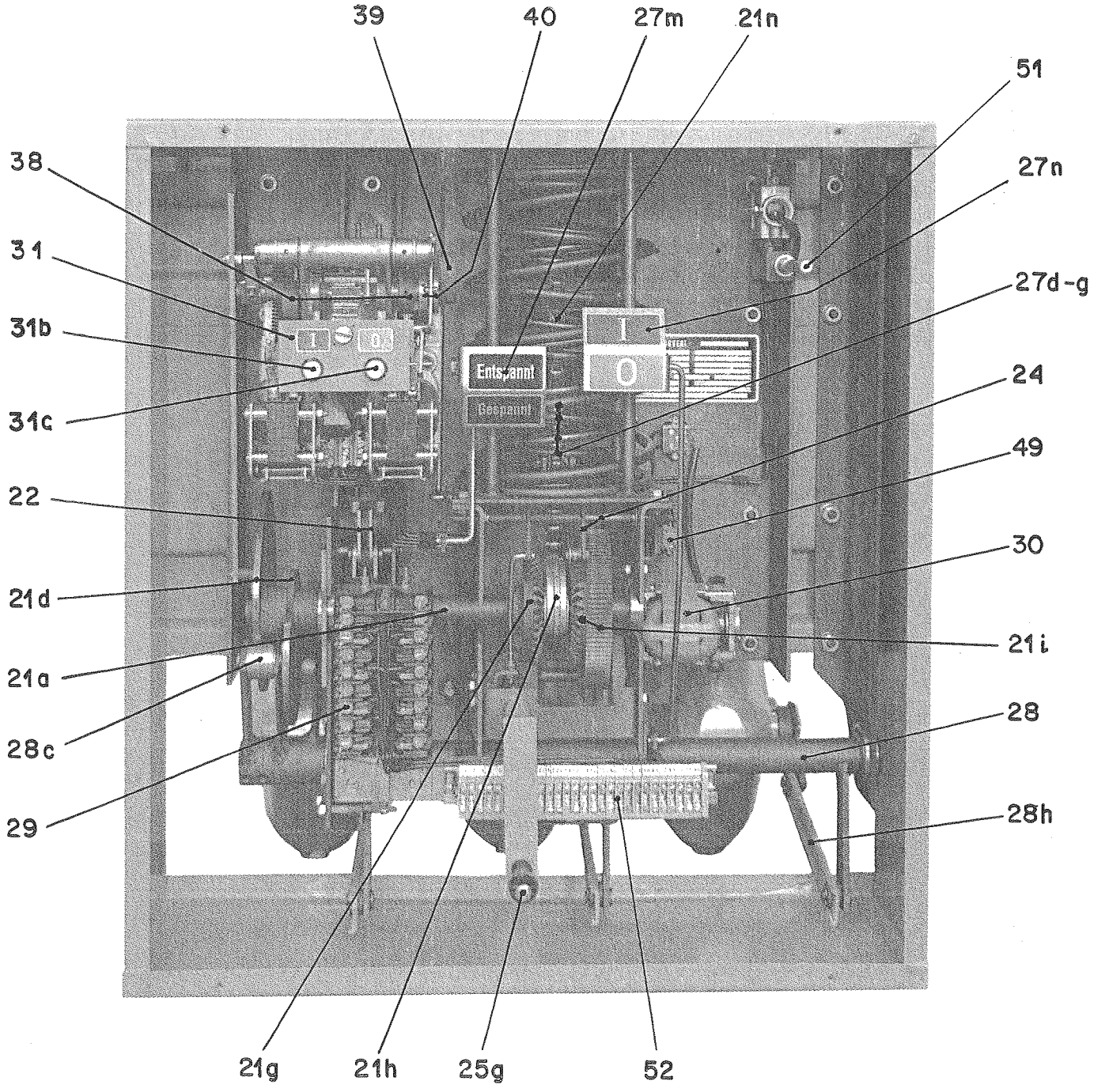

BROWN BOVERI

128934

Fig.6

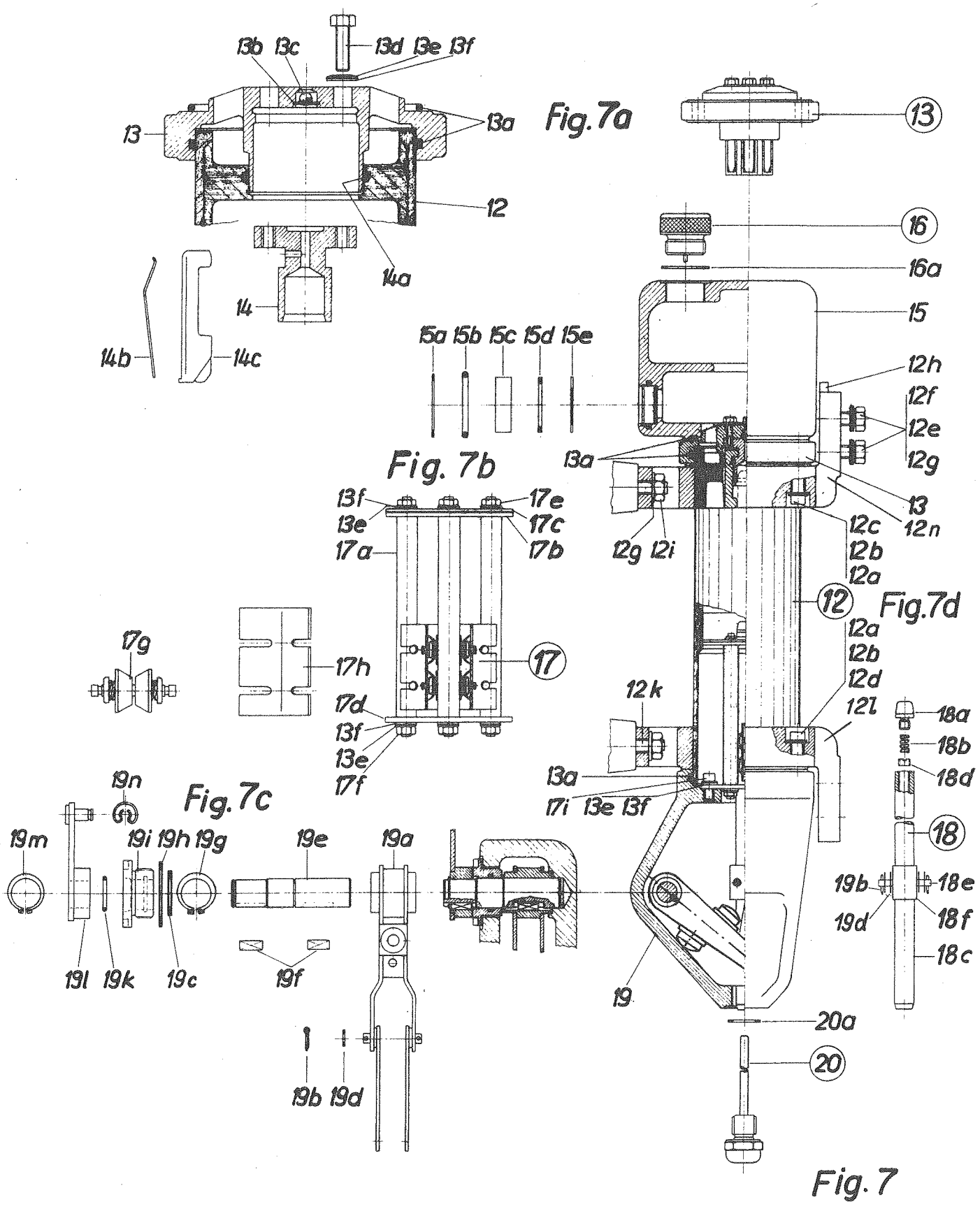

Fig. 7

AG 90 242

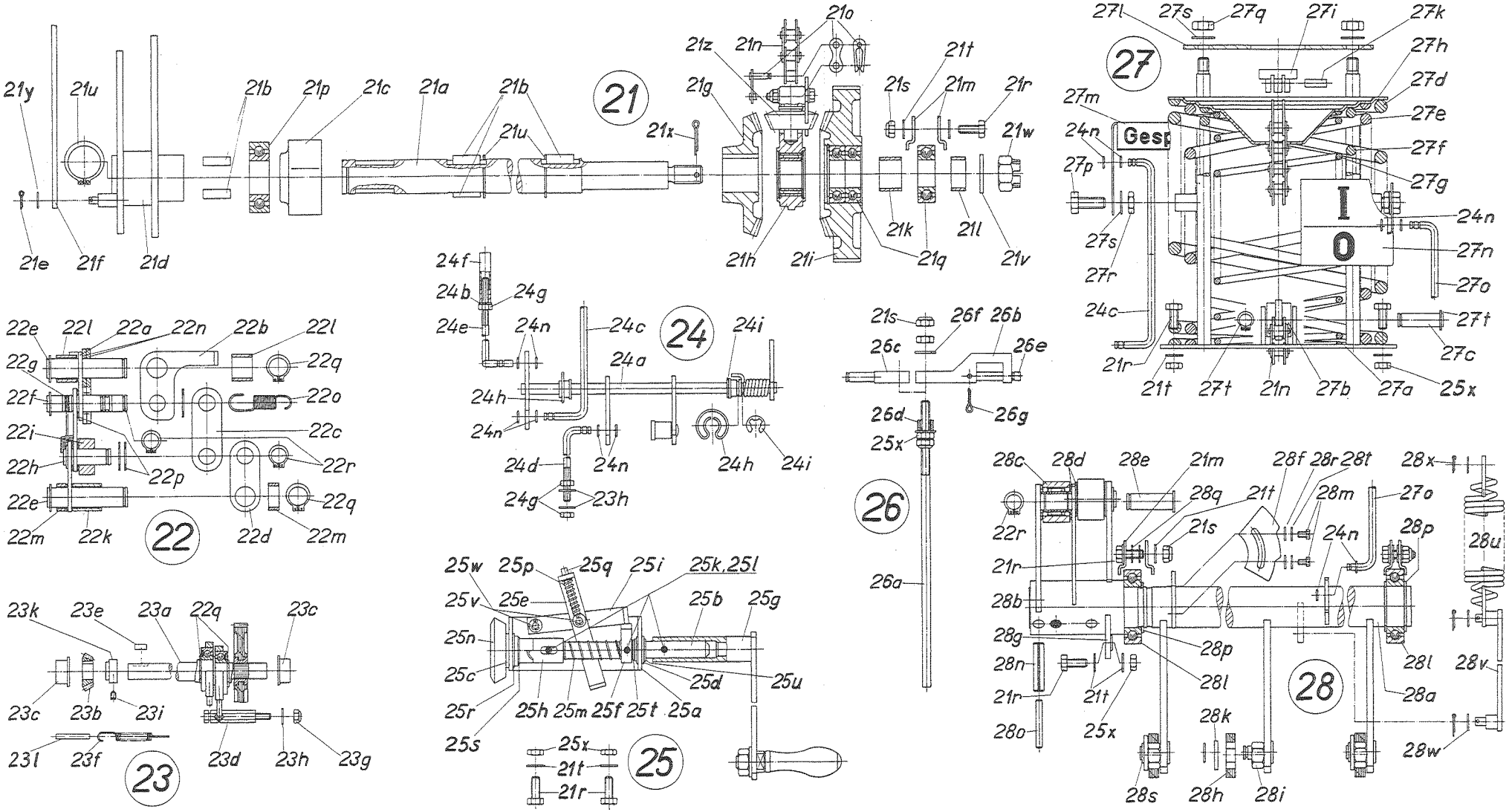

Fig.8

AG 90234 142144

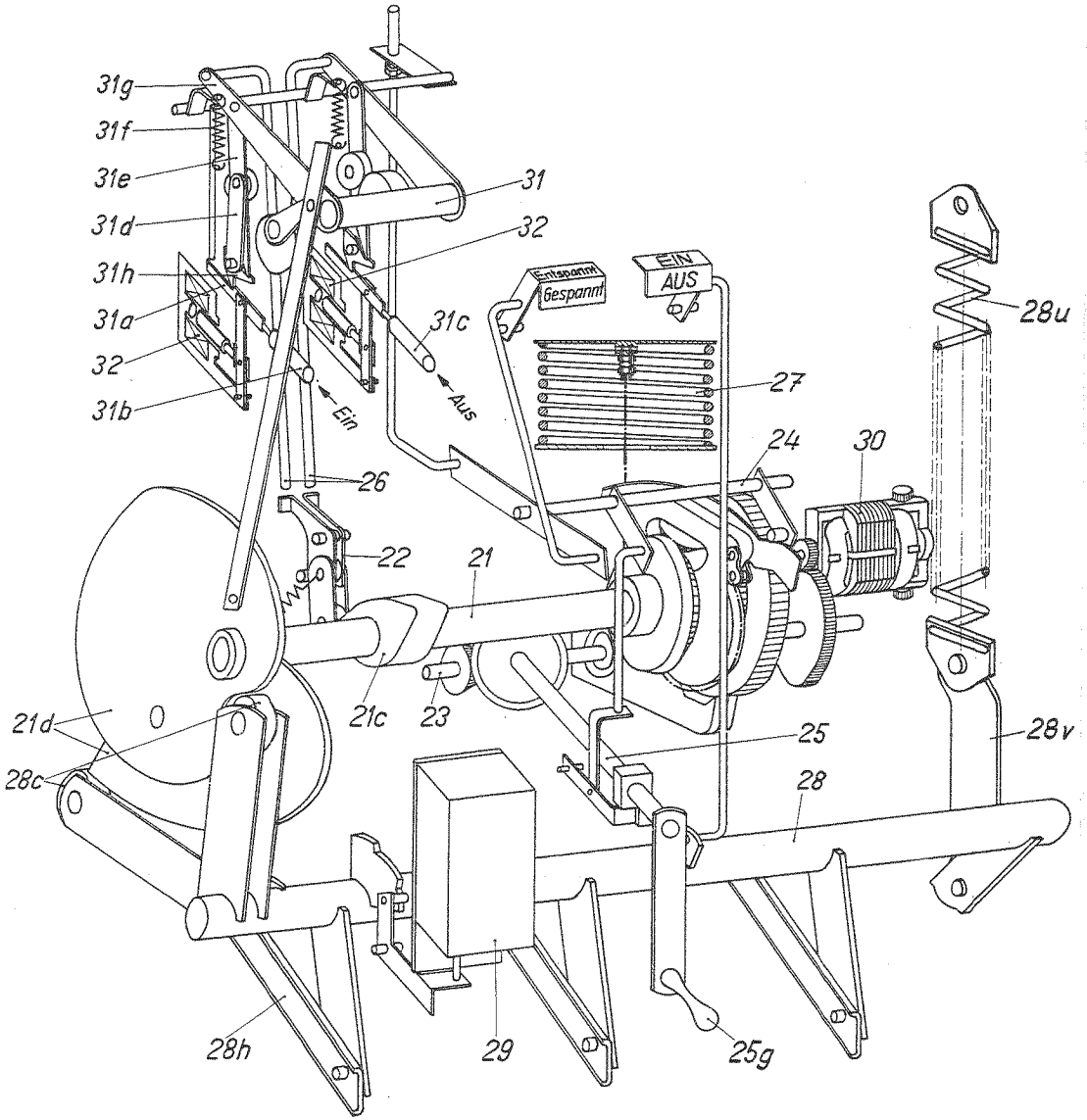

Fig. 9

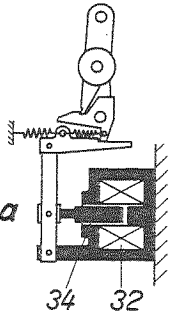

Fig. 10a

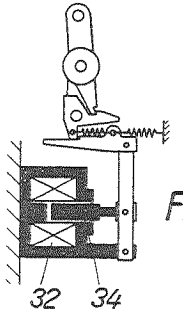

Fig. 10c

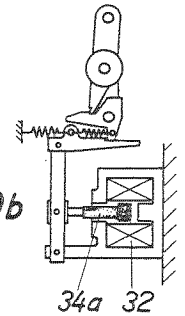

Fig. 10b

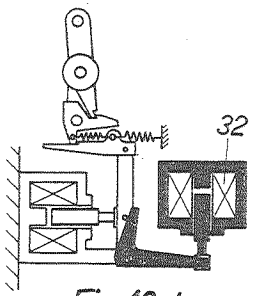

Fig. 10d

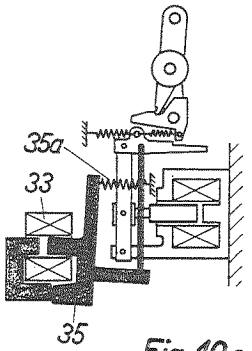

Fig. 10e

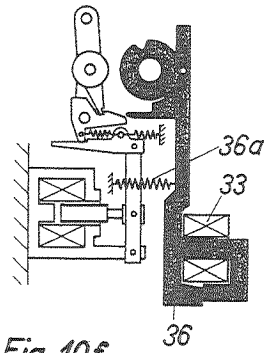

Fig. 10f

AG 90234/242/244 Fig. 10

Lubricating chart for SBK

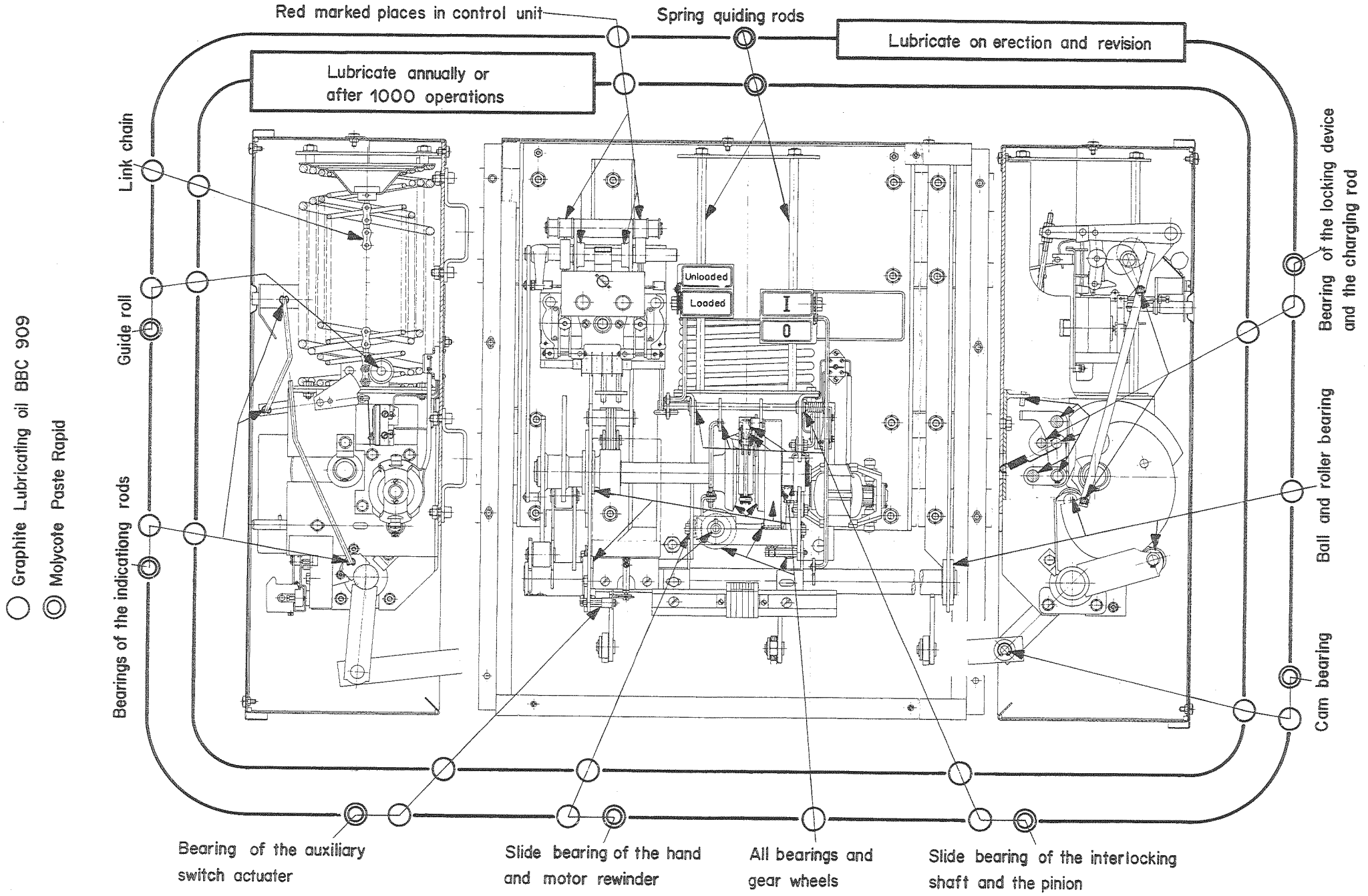

BV-AG 90234/242/244
AG 332842

Fig.11