Table of contents

1/1x19"

Rear view slot

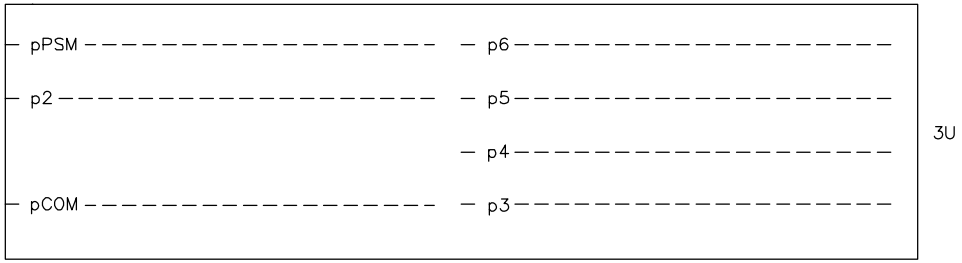

p= Position

Rear view terminal

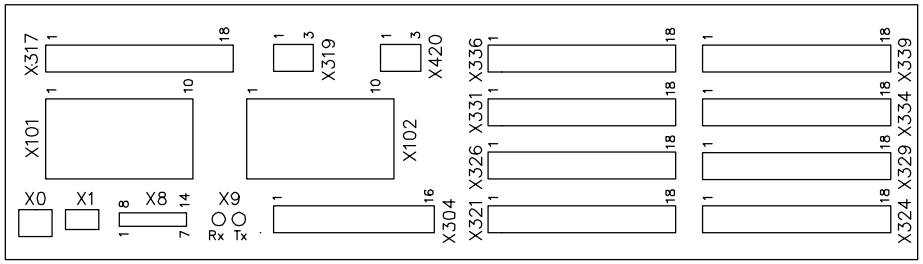

Designation for 3U, 1/1x19" casing with 1 TRM

Module	Slot	Terminal
COM	pCOM	X0, X1, X8, X9, X304
TRM	p2	X101, X102
PSM	pPSM	X317. X319, X420
BIO	p3	X321, X324
BIO	p4	X326, X329
BIO	p5	X331, X334
BIO	p6	X336, X339

Based on	Prepared 2011-08-17	Agneta Rydh	Title Connection Diagram REL650 (1Ph/1CB) A11 IEC symbols
	Approved 2012-04-24	Roger Karlsson	
	Project		
Rev / Rev. Note / Date / Name			ABB AB

Doc.des.	Doc.kind	Ref.des.	
Resp.dept.	PSNX/TPLA	Rev.ind. A	Lang. en
Doc.No. 1MRK006501-KC			Sheet 2
			Cont. 3

Communication module (COM)

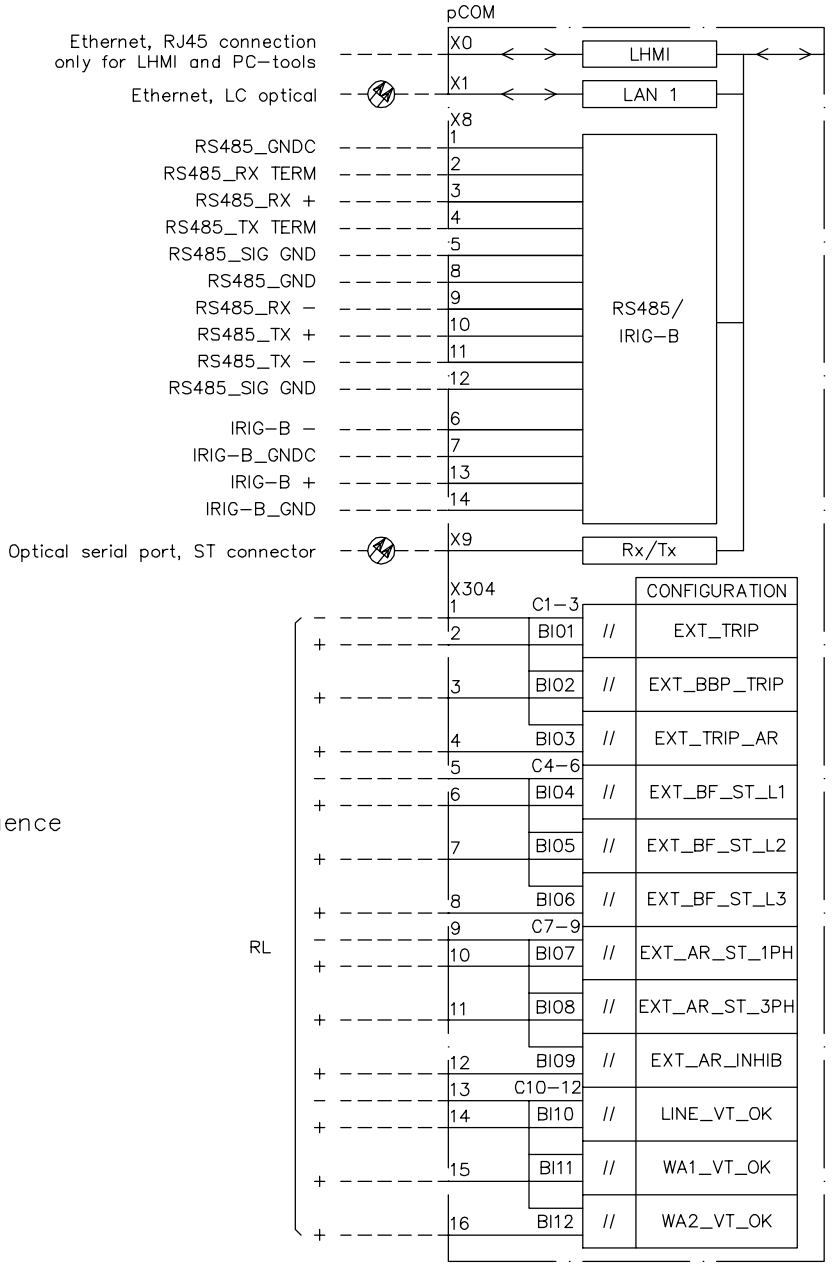

Observe polarity sequence of RL connectors

Based on	Prepared 2011-08-23 Agneta Rydh	Title Connection Diagram REL650 (1Ph/1CB) A11 IEC symbols	Doc.des. Doc.kind
	Approved 2012-04-24 Roger Karlsson		Ref.des.
	Project		Resp.dept. PSNX/TPLA Rev.ind. A Lang. en
Rev Rev. Note Date Name		ABB AB	Doc.No. 1MRK006501-KC Sheet 3 Cont. 4

Power supply module 48–125 VDC (PSM)

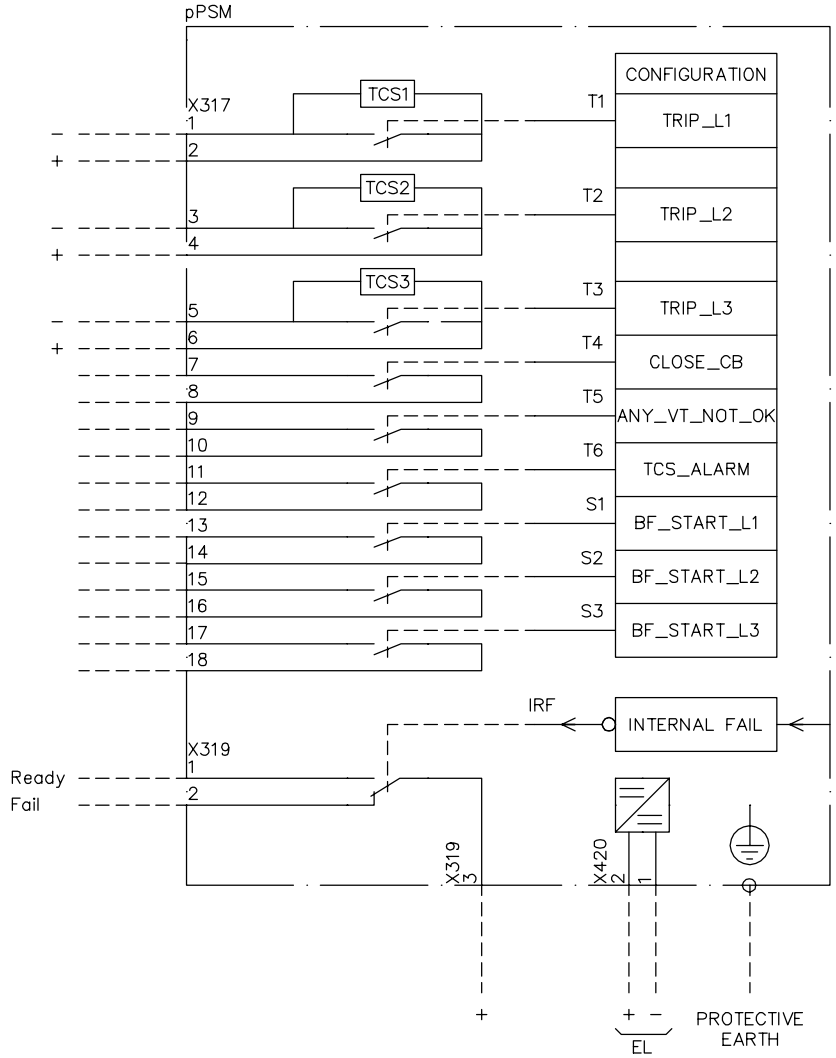

Observe polarity sequence

Based on	Prepared 2011–08–23	Agneta Rydh	Title Connection Diagram REL650 (1Ph/1CB) A11 IEC symbols
	Approved 2012–04–24	Roger Karlsson	
	Project		

Rev	Rev. Note	Date	Name

ABB AB

Doc.des.	Doc.kind	Ref.des.	
Resp.dept.	PSNX/TPLA	Rev.ind. A	Lang. en
Doc.No. 1MRK006501–KC		Sheet 4	Cont. 5

Power supply module 110–250 VDC, 100–240 VAC (PSM)

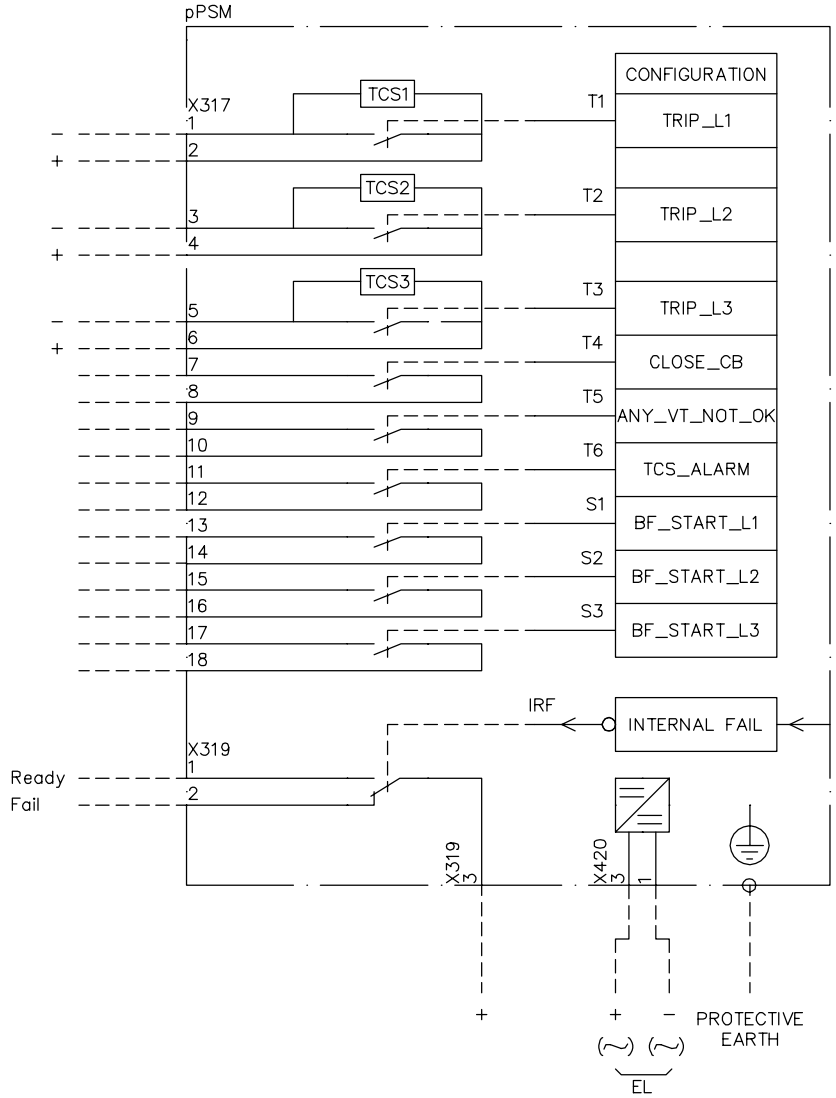

Observe polarity sequence

Based on	Prepared 2011-08-23	Agneta Rydh	Title Connection Diagram REL650 (1Ph/1CB) A11 IEC symbols
	Approved 2012-04-24	Roger Karlsson	
	Project		

Rev	Rev. Note	Date	Name

ABB AB

Doc.des.	Doc.kind	Ref.des.	
Resp.dept.	PSNX/TPLA	Rev.ind. A	Lang. en
Doc.No. 1MRK006501-KC		Sheet 5	Cont. 6

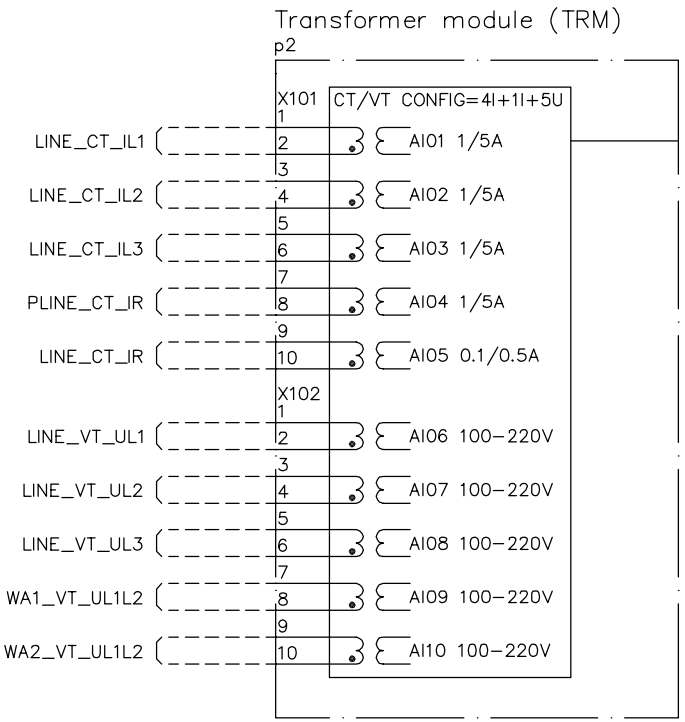

Compression or ringlug terminals

- Indicates high polarity. Note that internal polarity can be adjusted by setting of analog input CT neutral direction and or on SMAI pre–processing function blocks.

Based on	Prepared 2011–08–23 Agneta Rydh	Title Connection Diagram REL650 (1Ph/1CB) A11 IEC symbols	Doc.des. Doc.kind
	Approved 2012–04–24 Roger Karlsson		Ref.des.
	Project		Resp.dept. PSNX/TPLA Rev.ind. A Lang. en
Rev Rev. Note Date Name		ABB AB	Doc.No. 1MRK006501–KC Sheet 6 Cont. 7

Binary input/output module (BIO)

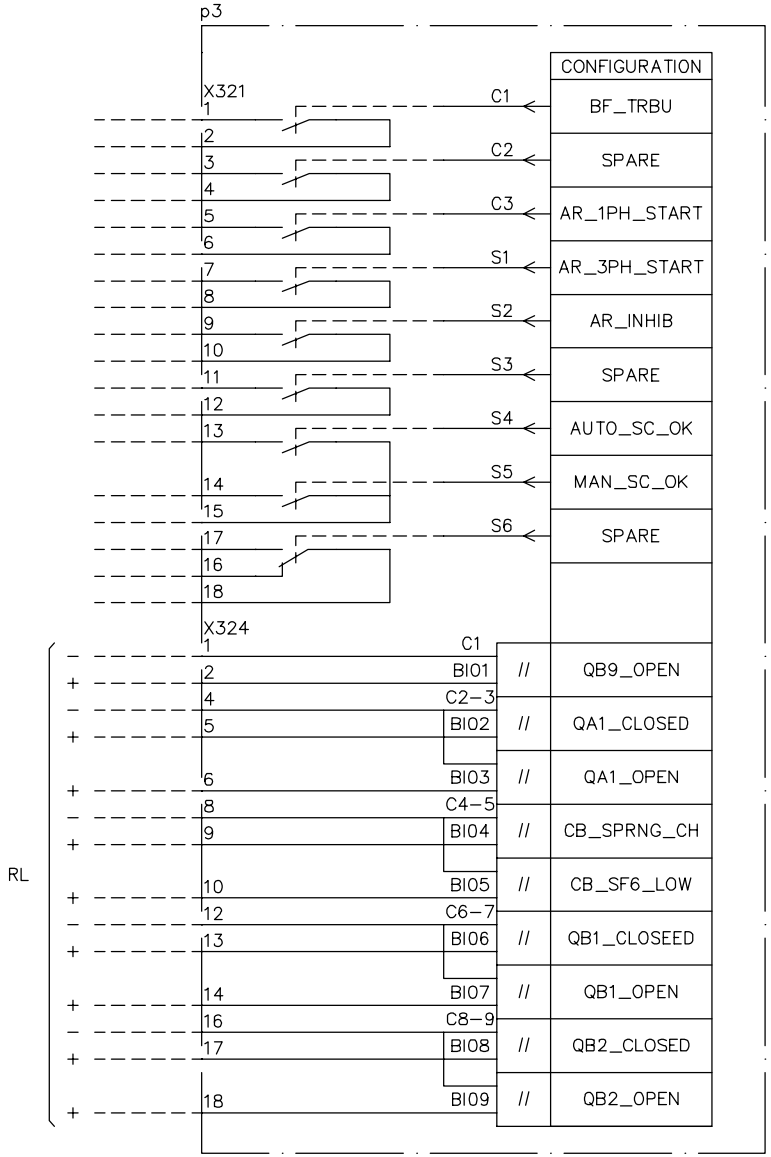

Observe polarity sequence of RL connectors

Based on	Prepared 2011–08–23	Agneta Rydh	Title Connection Diagram REL650 (1Ph/1CB) A11 IEC symbols
	Approved 2012–04–24	Roger Karlsson	
	Project		
Rev / Rev. Note / Date / Name			ABB AB

Doc.des.	Doc.kind	Ref.des.	
Resp.dept.	PSNX/TPLA	Rev.ind. A	Lang. en
Doc.No. 1MRK006501–KC		Sheet 7	Cont. 8

Binary input/output module (BIO)

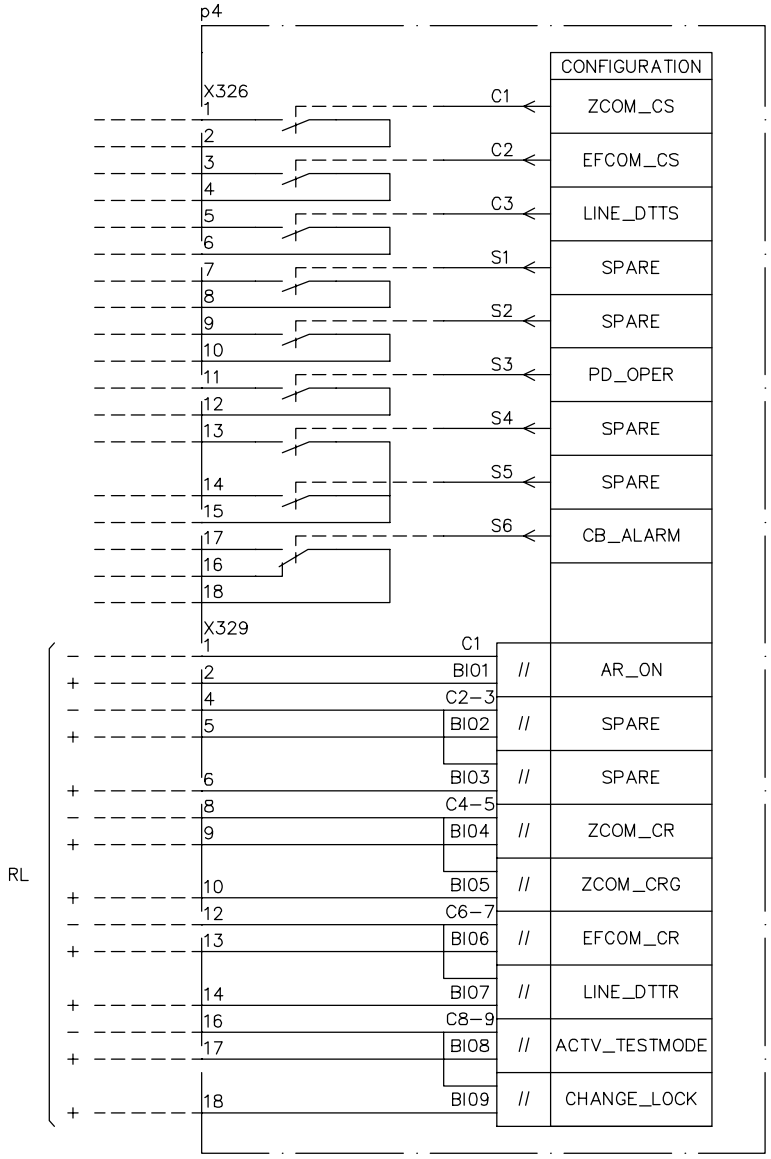

Observe polarity sequence of RL connectors

Based on	Prepared 2011–08–23	Agneta Rydh	Title Connection Diagram REL650 (1Ph/1CB) A11 IEC symbols
	Approved 2012–04–24	Roger Karlsson	
	Project		

Rev	Rev. Note	Date	Name

ABB AB

Doc.des.	Doc.kind	Ref.des.	
Resp.dept. PSNX/TPLA	Rev.ind. A	Lang. en	
Doc.No. 1MRK006501–KC		Sheet 8	Cont. –