Technical instruction
ACS250 micro drives, 110-480 V
Additional relay output option module - RCRO-01

Overview

ACS250 drives include one built-in form C relay as part of the standard I/O configuration. For applications requiring an additional output relay, the RCRO-01 relay output module can be added. Details on the option module are shown in the following table.

Option part number	Additional relays provided	Notes
RCRO-01	1	The relay output module attaches to the ACS250 control terminal block.

Note! The relay output module replaces the analog output function the ACS250. The analog output is no longer available when using the relay output module.

Relay output module (RCRO-01)

Terminal configuration

Terminal	Control terminals	Long name	Terminal function
1	+24 V	+Supply voltage	Normal ACS250 function
2	DI1	Digital input 1	Normal ACS250 function
3	DI2	Digital input 2	Normal ACS250 function
4	DI3/AI2	Digital input 3/ analog input 2	Normal ACS250 function
5	+10 V	Potentiometer supply (10 V)	Normal ACS250 function
6	DI4/AI1	Digital input 4/ analog input 1	Normal ACS250 function
7	0 V	0 V user ground	Normal ACS250 function
8	RL2-C	Relay 2 output common	Relay contacts 50 V AC, 30 V DC, 5 A
9	RL2-NO	Relay 2 output NO	Relay contacts 250 V AC, 30 V DC, 5 A
10	RL1-C	Relay 1 output common	Relay contacts 250 V AC, 30 V DC, 5 A
11	RL1-NO	Relay 1 output NO	Relay contacts 250 V AC, 30 V DC, 5 A

The relay output module attaches to pins 1-11 on the control terminal block of the ACS250 drive.

Relay output module terminals

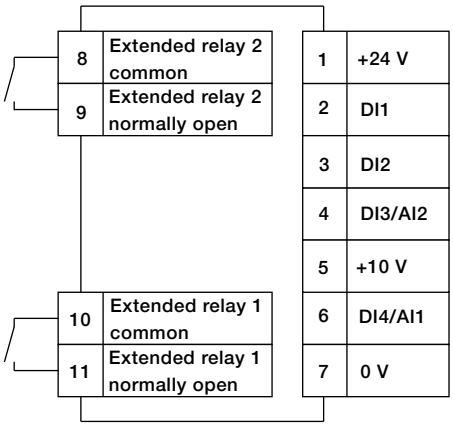

Parameter configuration

Parameter 1501 is used for selecting the conditions under which the second relay contacts open or close. On the standard drive, without the relay option module, this parameter controlled the analog output on terminals 8 & 9.

Setting the function of the second relay

Parameter 1501 is used to select the analog output function of a standard drive and, with the relay output module installed on the drive, the digital function of the second relay. The analog output is converted to a digital output (relay contact closure or opening) using the following function table.

1501	Function	Explanation
0	Drive enabled	The relay contacts close when the drive enable signal is present and the drive has gone to an enabled state (i.e. no trip or fault present).
1	Drive healthy	The relay contacts close when the drive is powered up and no fault exists. If the power is removed, or the drive trips, the relay contacts will open.
2	Motor at target speed	The relay contacts close when the drive output frequency matches the requested set point frequency.
3	Drive tripped	The relay contacts are open when the drive is powered up and no fault exists. If the drive trips the relay contacts will close.
4	Output frequency ≥limit	The relay contacts close when the output frequency of the drive is greater than the limit programmed in 3200 and reopens when the output frequency falls below the level programmed in 3200.
5	Motor current ≥limit	The relay contacts close when the output current of the drive is greater than the limit programmed in 3200 and reopens when the output current falls below the level programmed in 3200.
6	Output frequency <limit	The relay contacts close when the output frequency of the drive is below the limit programmed in 3200 and reopens when the output frequency goes above the level programmed in 3200.
7	Motor current <limit	The relay contacts close when the output current of the drive is below the limit programmed in 3200 and reopens when the output current goes above the level programmed in 3200.

Note that options 8, 9 in 1501 cannot be used to control the relay, as these are analog outputs.

3200 Relay adjustable threshold limit

This parameter is used to define the closing and opening level (limit) for the output relays (1 and 2) where the switching point is a variable or adjustable value. The parameter is active when 1501 is set to a value between 4 and 7.

The adjustable threshold parameter is set as a percentage of the function selected in 1501. The percentage values set relate to the following drive values.

1501	Function	3200 Settings
4	Output frequency≥limit	3200 is set as a percentage of 2008 (motor maximum speed).
5	Motor current≥limit	3200 is set as a percentage of 9906 (motor rated current).
6	Output frequency<limit	3200 is set as a percentage of 2008 (motor maximum speed).
7	Motor current<limit	3200 is set as a percentage of 9906 (motor rated current).

Example

If 1501 is set to ‘4’ (output frequency≥limit) then 3200 is set as a percentage of 2008 (motor maximum speed).

Assuming the parameter 2008=60 Hz, and 3200=50.0 %, then relay 2 contacts will close when the output frequency is equal or above 30.0 Hz, and reopens when the output frequency is less than 30.0 Hz.

Note that parameter 3200 is active for both user relay 1 and user relay 2 simultaneously. When one or the other relays are configured with a value between 4 and 7 then the opposing relay should be assigned to a digital function (value between 0 and 3).

For more information please contact your local ABB representative or visit:

www.abb.com/drives

3AUA0000156943 REV A EN 6.5.2015

Power and productivity for a better world™