Station Automation & Protection

Installation and commissioning manual

RET 521*2.3

Transformer protection terminal

ABB

Contents

The chapter “Installation”

This chapter instructs the user how to install the protection terminal RET 521. The instructions covers mechanical, electrical and fiber optical installation, which has to be done before the commissioning work can be performed.

1 Introduction

The mechanical and electrical environmental conditions at the installation site must be within the permissible range according to at the data sheets of the terminal. Dusty, damp places, places liable to rapid temperature variations, powerful vibrations and shocks, surge voltages of high amplitude and fast rise time, strong induced magnetic fields or similar extreme conditions should be avoided.

Sufficient space must be available in front of and at rear of the terminal to allow access for maintenance and future modifications.

2 Preparations

2.1 Receiving, unpacking and checking

1 **Remove the protection terminal from the transport case and perform a visual inspection of any possible transport damage.**

   Check that all items are included in accordance with the delivery documents. In case of transport damage, appropriate action must be taken against the last carrier and the nearest ABB office or agent should be informed. ABB should be notified immediately if there are any discrepancies in relation to the delivery documents.

2 **Check that the terminal has the correct identity markings on the front.**

   The check should confirm that the terminal type, markings and serial number corresponds to what ordered.

2.2 Storage

If the protection terminal is to be stored before installation, this must be done in a dry and dust-free place, preferably in the original transport case.

3 Mechanical installation

The RET 521 protection terminal is built in the mechanical packaging system described in the Buyer’s Guide. See “Reference publications” on page 47.

Suitable mounting kits for 19" rack mounting, flush mounting, semi-flush mounting and wall mounting can be ordered. The mounting kits contains all parts needed for the mounting, including screws and assembly instructions.

3.1 19" rack installation

3.1.1 Single case installation

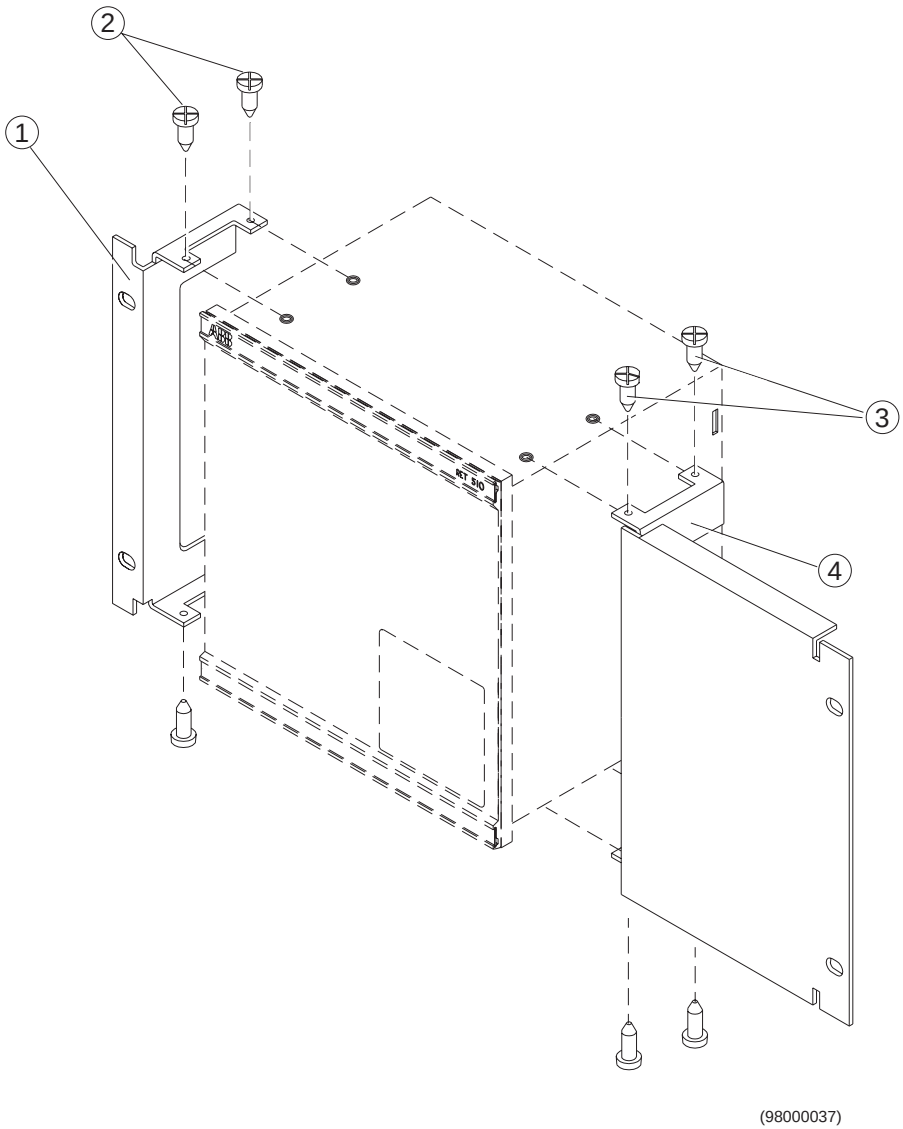

Fig. 1 RET 521 with side plate mounted in 19" rack

The mounting kit, article number 1MRK 000 020-BA for case size 6Ux3/4 consists of:

- one mounting angle for 6U, 19" rack, with four screws (TORX T20), pos (1) and (2)
- one mounting angle for 6U, with four screws (TORX T20) and a side plate suitable for case size 6Ux 3/4, pos (3) and (4)
- assembly instructions.

3.1.2 Side-by-side mounting

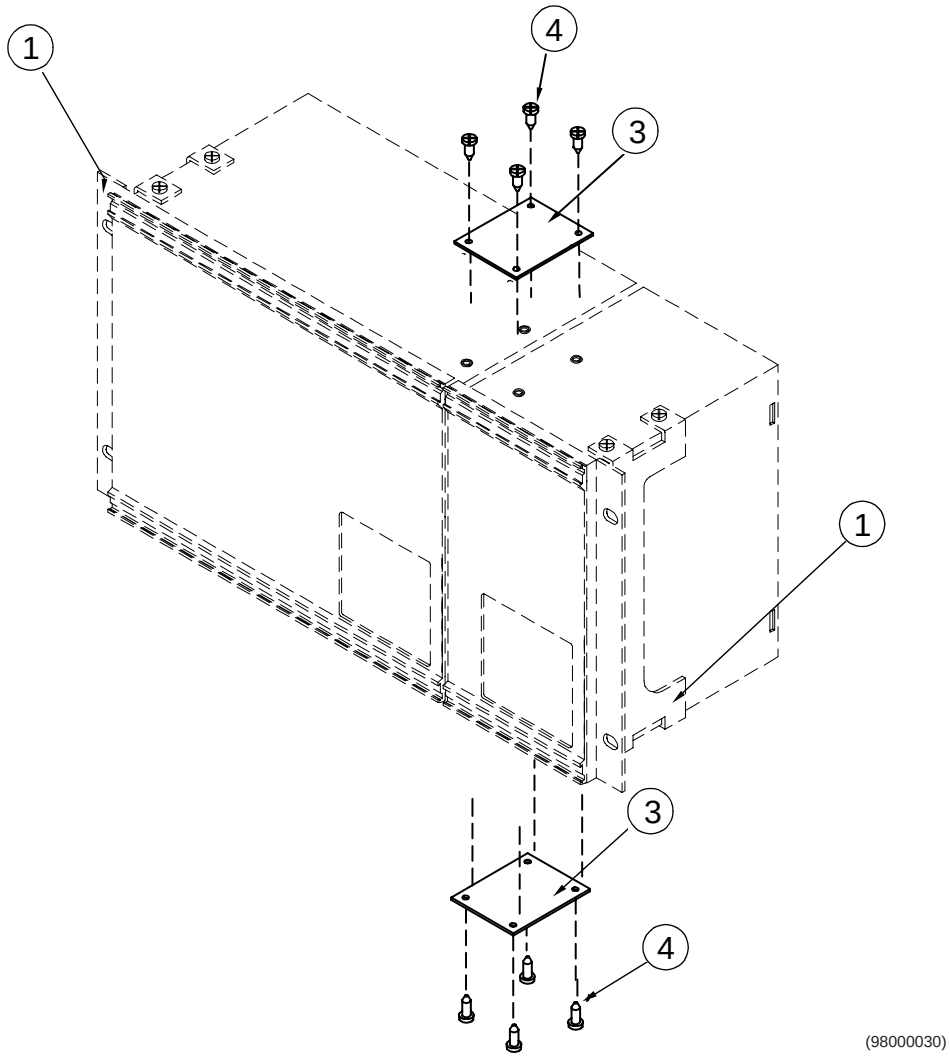

Fig. 2 Side-by-side mounting

The mounting kit, article number 1MRK 000 020-CA for side-mounting of one case size 6U x 3/4 and one case size 6Ux 1/4 consists of:

- two mounting angles for 6U, 19” rack, each with four screws (TORX T20), pos (1)
- two side-by-side mounting plates, each with with four screws (TORX T20), pos (3) and (4)
- assembly instructions.

3.2 Flush mounting

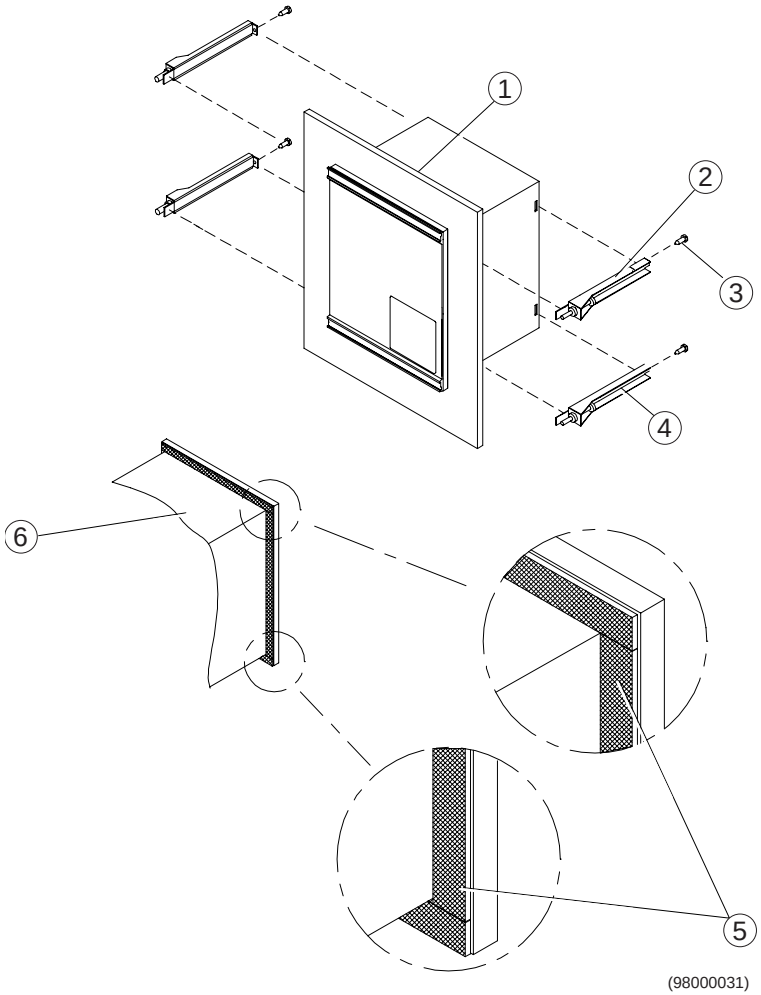

Fig. 3 Flush mounting

Mounting kit, article number 1MRK 000 020-Y, for flush-mounting of all sizes of case 6U consists of:

- four side holders and a sealing strip, pos (4) and (5)
- four small (TORX T10), pos (3), and four big screws (TORX T25), not shown
- assembly instructions.

Also see “Case and cut-out dimensions” .

3.2.1 Mounting procedure

1. **Cut and affix the sealing strip if IP 54 is required.**
2. **Put the protection terminal in the cut-out.**
3. **Fasten the side holders to the back of the protection terminal with the small screws.**
4. **Fix the protection terminal with the big screws.**

3.3 Semi-flush mounting

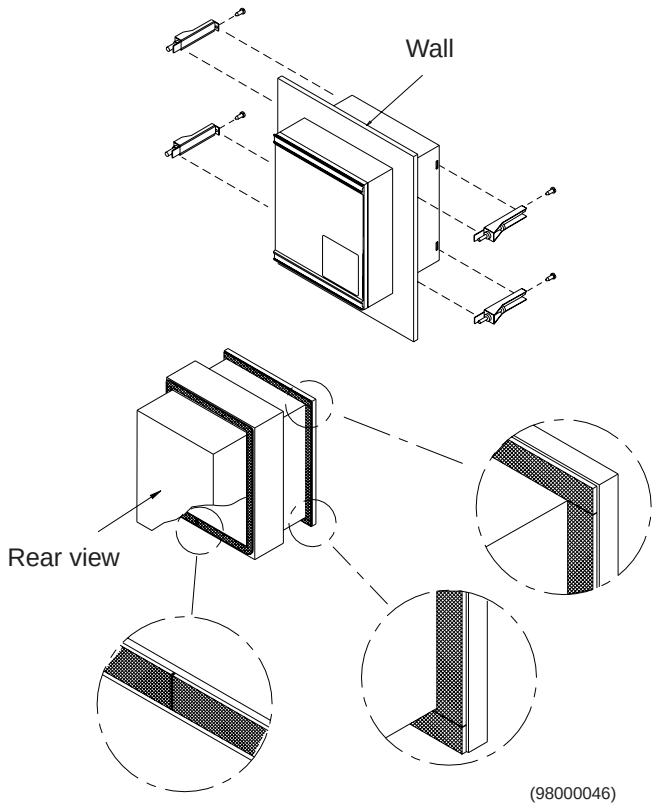

Fig. 4 Semi-flush mounting

The mounting kit, Article number 1MRK 000 020-AL, for semi-flush mounting of case size 6U x 3/4, consists of the same parts as the flush-mounting kit, plus a distance frame. The distance frame is mounted around the protection terminal case before it is placed in the terminal cut-out.

3.4 Wall mounting

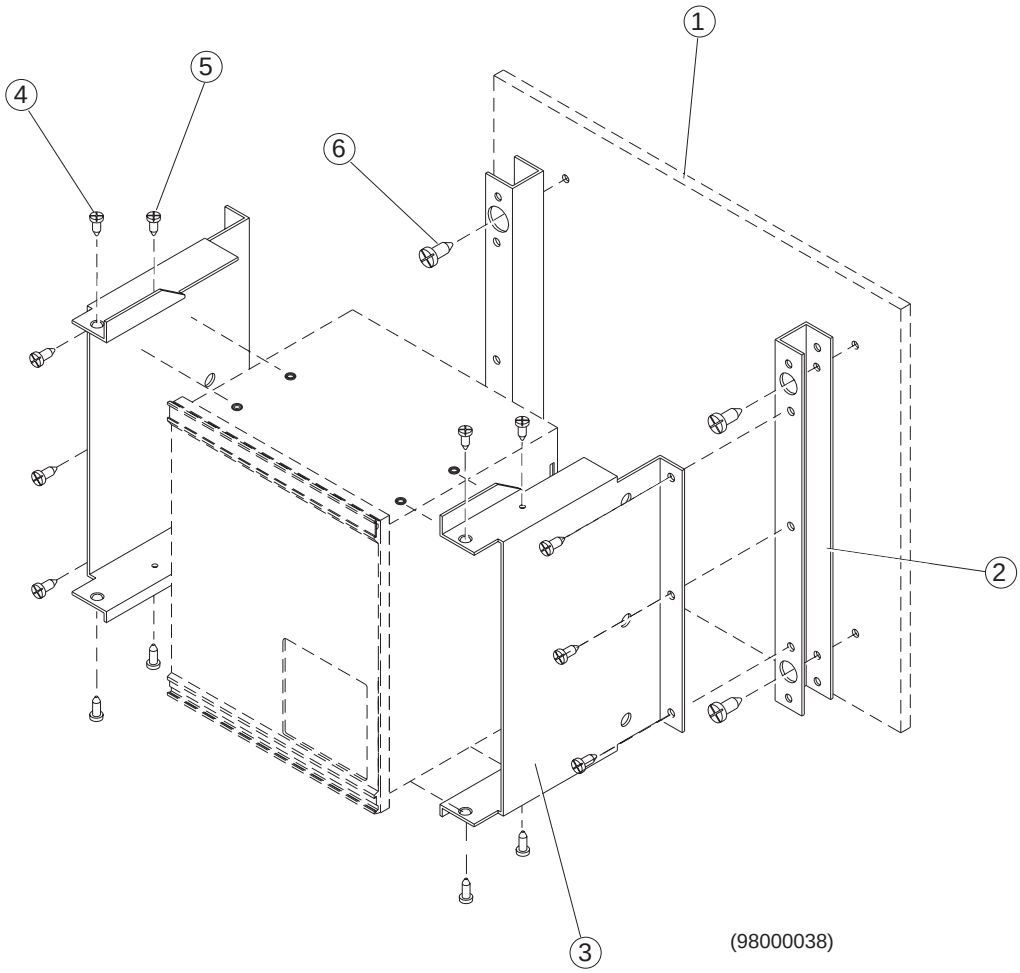

Fig. 5 Wall mounting

Mounting kit, article number 1MRK 000 020-DA, for wall mounting of all sizes of case 6U consists of:

- two mounting angles (side plates), pos (3)
- screws (grip size TORX T20, T25 and T30), pos (4), (5) and (6)
- two mounting bars to be mounted on the wall, pos (2)
- assembly instructions.

3.5 Case and cut-out dimensions

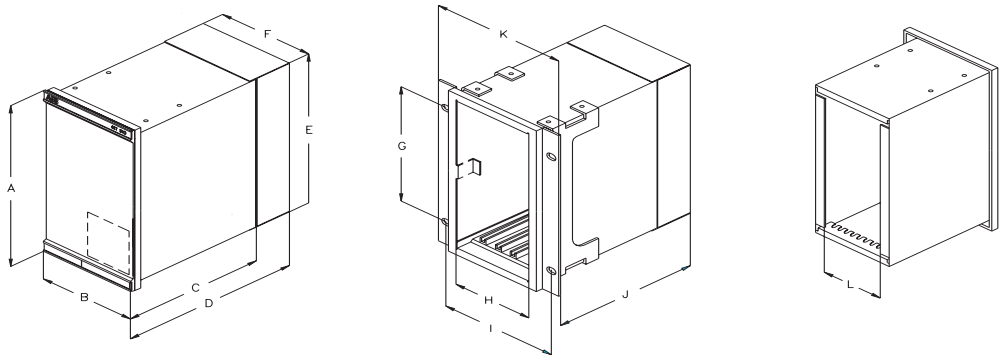

Case size	A	B	C	D	E	F	G	H	I	J	K	L
6U x 1/2	265,9	223,7	204,1	245,1	255,8	205,7	190,5	203,7	–	227,6	–	189,7
6U x 3/4		336				318		316	–		–	302
6U x 1/1		448,3				430,3		426,3	465,1 *)		482,6	414,3

*) equal to 19” (mm)

Flush mounting

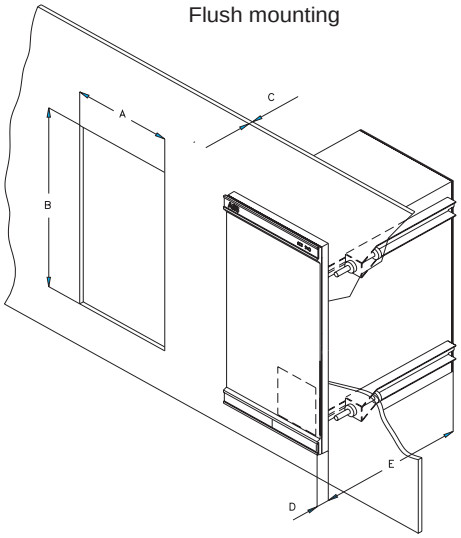

Semi-flush mounting

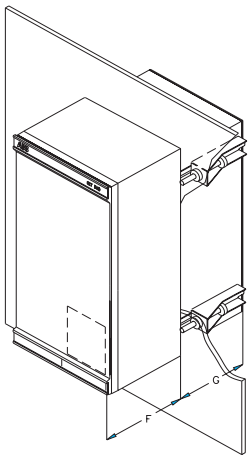

Case size	Cut-out dimensions A ±1	Cut-out dimensions B ±1
6U x 1/2	210,1	259,3
6U x 3/4	322,4	
6U x 1/1	434,7	

(mm)

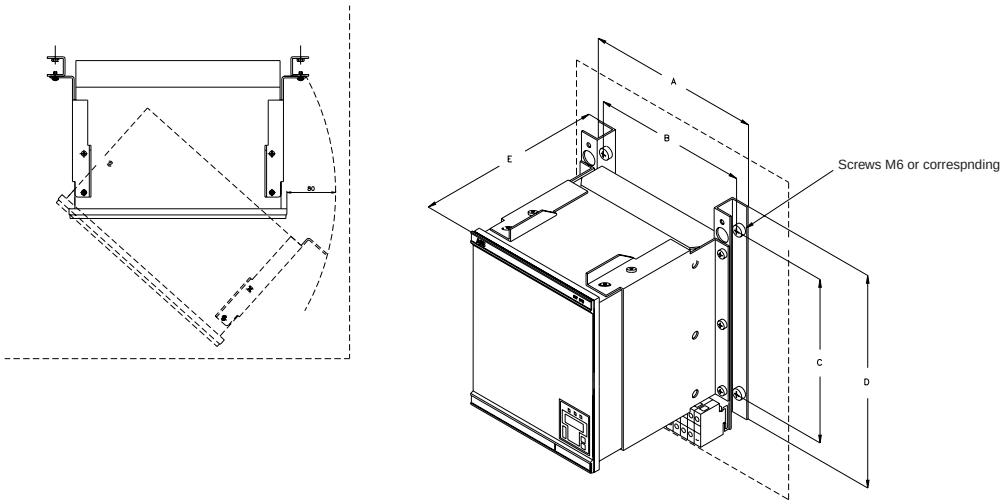

(98000047)

Case size	A	B	C	D
6U x 1/2	292	267,1	272,8	390
6U x 3/4	404,3	379,4		
6U x 1/1	516	491,1		

(mm)

E = 247 mm

4 Electrical installation

The wiring from the cubicle terminals to the terminals on the rear side of the unit must be made in accordance with the established guidelines for this type of equipment. The wires for binary inputs and outputs and the auxiliary supply should be laid separated from the current and voltage transformer cables between the cubicle terminals and the protection terminal.

The external connections to the terminals of RET 521 shall be made in accordance with the valid terminal diagram. The cables from the current and voltage transformers should be identified with regards to phases and connected to the proper terminals.

4.1 Connectors for CT and VT circuits

Connectors X31 and X71 for current and voltage transformer circuits are so called “feed-through terminal blocks” and are designed for conductors with cross sectional area up to 4 mm^2.

4.2 Signal connectors

Signal cabling are connected to female screw compression connector, which in turn is connected to corresponding circuit board male connectors, sited at the rear of the unit.

At installation, all wiring to the female connector should be done before plugged into the male part and fixed to the case by screws. The conductors can be of rigid type (solid, stranded) or of flexible type

The female connectors can be used with conductors with a cross section area of 0.2-2.0 mm^2. If more than one conductor is used in the same screw terminal, the allowed cross section area is 0.2-1 mm^2.

If two conductors, each with area 1,5 mm^2 shall be applied to the same socket, a ferrule must be used. This ferrule, ABB article number 1MKC 840 003-4 or Phoenix type AI-TWIN 2 . 1,5 - 8 BK, is applied with crimping pliers type ZA3 from Phoenix. No soldering is needed.

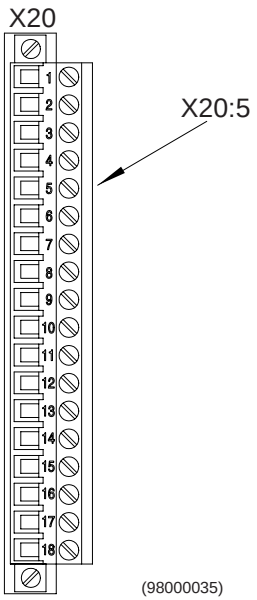

Fig. 6 Signal connector

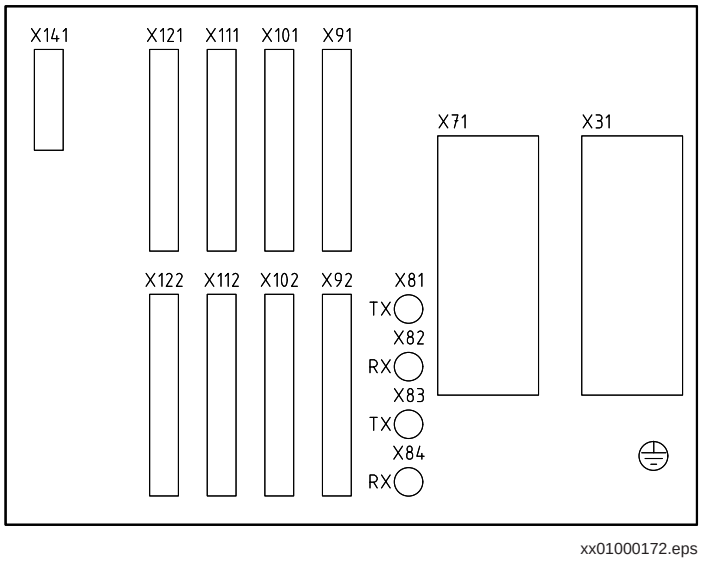

Fig. 7 Rear side of RET 521 with maximum number of connectors.

The number of connectors depends on the type of RET 521. Connectors which are not included are replaced with a blanking plate.

Table 1: Connectors and associated printed board assemblies

Connector	Location of PBA	Type of PBA (printed board assembly)
X31	P3	Analogue input module 1
X71	P7	Analogue input module 2
X81-X84	P8	Optical communication module
X91/X92	P9	Binary I/O module, or binary input module, or binary output module
X101/X102	P10	Same alternatives as for P9
X111/X112	P11	Same alternatives as for P9
X121/X122	P12	mA input unit or same alternatives as for P9
X141	P14	DC/DC converter module

Also see the terminal diagrams, part of the Technical descriptions manual, see “Reference publications” .

4.3 Safety and EMC earthing

To fulfill safety regulations and to get e full EMC protection, a separate flexible earthing wire must be connected the shortest possible route from the earthing screw at the rear of the terminal case to the nearest earthing point in the cubicle. The cubicle must be properly connected to the station earthing system.

4.4 Protection terminals with COMBITEST test switch

If RET 521 is provided with a COMBITEST test switch, COMBIFLEX wires are used to interconnect the test switch and the connection terminals on the rear side of the terminal. The wires have 20 A sockets on the end which is connected to the test switch. See the Buyer's Guide.

5 Fiber optic installation

The terminal can, if ordered accordingly, be equipped with optical SPA and LON communication. In such case optical ports are provided on the rear side of the case for connection of the optic fibres. Optical ports X81 and X82 are used for the SPA bus communication, and ports X83 and X84 are used for the LON bus communication.

Either plastic or glass fibres can be used. Plastic fibres uses a snap-in connector, glas fibres a bayonet connector. Connectors are color coded to help avoid making faulty connections. Blue or dark grey fibre connector always goes to blue or dark grey chassie connector, and is used for receiving data. Black or grey fibre connector always goes to black or grey chassie connector, and is used for transmitting data. Depending on the fibre type used, plastic or glass, the blue/black (plastic) or dark grey/grey (glass) connector colors are used.

Fibre optical cables are sensitive to handling. The most important to have in mind when handling optical fibres is that they must not be bent too sharply. The minimum curvature radius is:

- 15 cm for plastic fibres.
- 25 cm for glass fibres.

When connecting or disconnecting the optical fibres, be certain not to apply any force to the fibre itself. Always hold the contact in a firmly grip, without twisting, pulling or bending the optical fibre.

If the optical fibre is too long and cable straps have to be used, the cable strap must not be applied too hard. There should always be some space between the optical fibre and the cable strap.

The chapter “commissioning“

This chapter instructs the user how to perform the commissioning work.The commissioning work includes general testing of associated equipment, entering the configuration and setting values into the terminal, secondary injection testing and primary injection test.

1 Introduction

A number of checks must be carried out before the protection terminal is taken into service.

Secondary testing of RET521 is made to verify that the all protection functions operate in accordance with the relay setting plan.

Checking of external circuits and associated equipment, such as CT's and VT's, circuit-breakers and signalling equipment is part of the commissioning work.

The commissioning work must also be properly documented for future reference.

2 Preparations

Before the commissioning work is started up, check that all necessary test equipment and documentation are available at site. Necessary documentation for commissioning includes:

- operators manual for RET 521. See "Reference publications" on page 47.
- valid circuit diagrams.
- protection setting list and sheets for test protocols.

For secondary testing of RET 521, a test set with three-phase current and voltage outputs and time measuring function should be available. The magnitude and phase angle of the output currents and voltages should be variable. The FREJA computer aided test set according to the Buyer's Guide is recommended.See "Reference publications" on page 47.

3 General testing

3.1 Check of CT circuits

The CT's must be connected in accordance with the circuit diagram provided with the terminal, both with regards to phases and polarity. The following tests are recommended:

- primary injection test to verify the current ratio and the correct wiring up to the protection terminal for all current transformers and phases.
- polarity check.
- check of the earthing of the CT circuits.
- verification of data for the CT's.

CT circuits must be properly connected to the station earth and only at one electrical point.

A plotting of the excitation characteristic of the CT secondary windings will verify the data for saturation voltage and hence the performance of the CT.

Note!

Both primary and secondary side must be disconnected from line and terminal when plotting the excitation characteristics.

Check that the screen is earthed outside the cable current transformers used for measuring of earth-fault currents.

3.2 Check of VT circuits

The VT's must be connected in accordance with the circuit diagram provided with the terminal, both with regards to phases and polarity. The following checks should be made:

- check of the connection up to the protection terminal for all voltage transformers and all phases.
- polarity check.
- check of the earthing of the VT circuits.

3.3 Check of auxiliary voltage circuits

Check that the auxiliary voltage supplied to the DC/DC converter is in accordance with the data for the terminal and that the voltage has correct polarity.

3.4 Check of binary input circuits

Check the connections to the digital inputs so that both input levels and polarity are in accordance with terminal specifications.

3.5 Check of binary output circuits

Check the connections to the digital outputs so that both output loads and polarity are in accordance with terminal specifications.

3.6 Check of trip circuits and circuit breakers

The trip circuits are tested as part of the secondary/primary injection test.

4 Generating setting and configuration values

All parameter settings can be made:

- locally, by means of the local human-machine interface (HMI).
- locally, by means of a PC via the optical front connector, using the Parameter Setting Tool (PST) in CAP 535 or SMS
- locally or remotely, via one of the ports on the rear, using the Parameter Setting Tool (PST) in CAP 535, or SMS or SCS.

The configuration of functions and logics in RET 521 is made by means of the configuration tool CAP 531 in CAP 535. The CAP 535 configuration and setting tool can be connected either to the front of the terminal or to the rear SPA port.

4.1 Built-in human machine interface (HMI)

The setting access on the built-in HMI can be blocked by configuring a binary input to the HMI--BLOCKSET signal. When this signal is active, the LEDs can still be cleared from the front. This configuration can be performed only from the built-in HMI under the menu:

Configuration
BuiltInHMI

4.2 Front Communication

The PC is conveniently connected to RET 521 via the optical front connector. You can use CAP 535 for both configuration and for setting. For setting and supervision, you can use PST (For the collection of disturbances to a front connected PC, RECOM is not required because all necessary functionality is built in to SMS 510).

You must use a special interface cable for connecting your PC to the front of the terminal. This can be ordered from ABB Automation Products AB, order No.
1MKC 950 001-1. It is plugged into the optical contact on the left side of the built-in HMI. The other end of the cable is plugged directly into the serial port of the PC. The cable includes an optical contact, an opto/electrical converter and an electrical cable with a standard 9-pole D-sub contact. This gives you a disturbance-free and safe communication with the terminal.

When communicating with a PC, the setting of the slave number and baud rate (communication speed) must be equal in the program and in the terminal. Further instructions on how to set these parameters in the PC program is found in the CAP 535 user's manual. For more information see "Reference publications" .

The setting of the slave number and baud rate of the front port of the terminal is done on the built-in HMI at:

Configuration
SPAComm
Front

4.3 Remote Communication, SMS or SCS

Setting can be performed via either of the optical ports at the rear of the terminal. When a PC is connected to the SMS system, PST is used. For the configuration, CAP 531 is used. For the collection of analogue data to a PC, RECOM or SMS510 is also required in the PC. Setting can also be done via the SCS based on MicroSCADA including the library module HV/RET 521.

For all setting and configuration via the optical ports on the rear, set the Setting Restrictions to Open. Otherwise, no setting is allowed via the rear communication ports. This setting applies for both the SPA port and the LON port. This parameter can only be set on the local HMI, and is located at:

Configuration
SPAComm
Rear
SettingRestrict

You can also permit changes between active setting groups with ActGrpRestrict in the same menu section.

When communicating with SMS or SCS via the SPA port, the setting of the slave number and baud rate (communication speed) must be equal in the computer program and in the terminal. For more information see "Reference publications" .

The setting of the slave number and baud rate of the rear SPA port of the terminal is done on the built-in HMI at:

Configuration
SPA Comm
Rear

When communicating via the LON port, the settings are made with the LNT 505, LON Configuration Tool. See “Reference publications” for details. The settings are shown on the built-in HMI at:

Configuration
LON Comm

From this menu, it is also possible to send the “ServicePinMessage” to the LNT. For further instructions, see the section *“Remote communication”* in the application manual.

5 Secondary injection testing

5.1 General

Secondary injection testing is a normal part of the commissioning. The operating value of all protection functions, the output to the proper trip and alarm contacts and the operation of digital input signals is checked and documented for future reference.

The connection of the test set to RET 521 is greatly simplified if the RTXP 24 test switch is included. When the test handle RTXH 24 is inserted in the test switch, preparations for testing are automatically carried out in the proper sequence, i.e. blocking of the tripping circuits, short-circuiting of the current circuits on the transformer side, opening of the voltage and current transformer circuits and making relay terminals accessible from the terminals on the test plug handle.

If RET 521 is not provided with a test switch, the terminal has to be tested in the proper way from external circuit terminals. Make sure that the instrument transformers are isolated from the circuits connected to the test set. The secondary phase terminals of the current transformers must be short-circuited to neutral before the circuit is opened if any current can flow on the primary side.

The testing requires a good understanding of the protection functions and the functional logic downloaded into the terminal. Several protection functions of the same type can be available within one RET 521, e.g. there are available three identical time-overcurrent functions. The commissioning engineer must be able to read out from the configuration diagram the connections from analog and digital inputs to the different protection functions and also the outputs from the functions to tripping and alarm relays.

A testing instruction is given for each type of protection function. In some cases, blocking of one stage, e.g. blocking of the high set stage when testing the low set stage, is used. The testing is performed in a sequence which secures that the blocked stage is released and tested. Blocking and releasing of stages are made in the setting menu and can be done on the built-in HMI.

Blocking or release of protection functions from digital input(s) shall, when included, be checked as a part of the secondary testing of the individual protection functions.

Before starting the test, go to the Test menu in the built-in HMI and activate the test mode with the setting:

Test
TestMode
Operation = On

When the setting has been saved, the test mode is activated and the yellow LED starts to flash.

When the test menu is activated, the setting:

DisturbReport
Operation = On

has the effect that:

- information on start and trip is displayed on the built-in HMI.
- disturbances are stored.

The different protection functions can be individually blocked in the sub-menu:

Test
TestMode
BlockFunctions

when the Test menu is activated. A slower back-up function can then be tested without interference from a faster function. E.g. with the setting BlockDÍFP = On, a three-phase time delayed over-current protection function with the same current inputs as the differential protection function can be conveniently tested.

In the Service Report/Functions menu, the start of the low or high set stage can be read when selecting the actual protection function and submenu FuncOutputs. For example, when function TOC1, low set stage of phase L1 operates, the reading in the built-in HMI changes to TOC1-STLSL1=1.

Note that RET 521 is designed for a maximum continuous current of four times rated value and a maximum continuous voltage of 1,5 times rated value. Fig. 1 shows test set FREJA connected to the two-winding transformer terminal RET521, Configuration No 1, for testing of protection functions connected to CT’s and VT’s on the delta (LV) side of the power transformer.

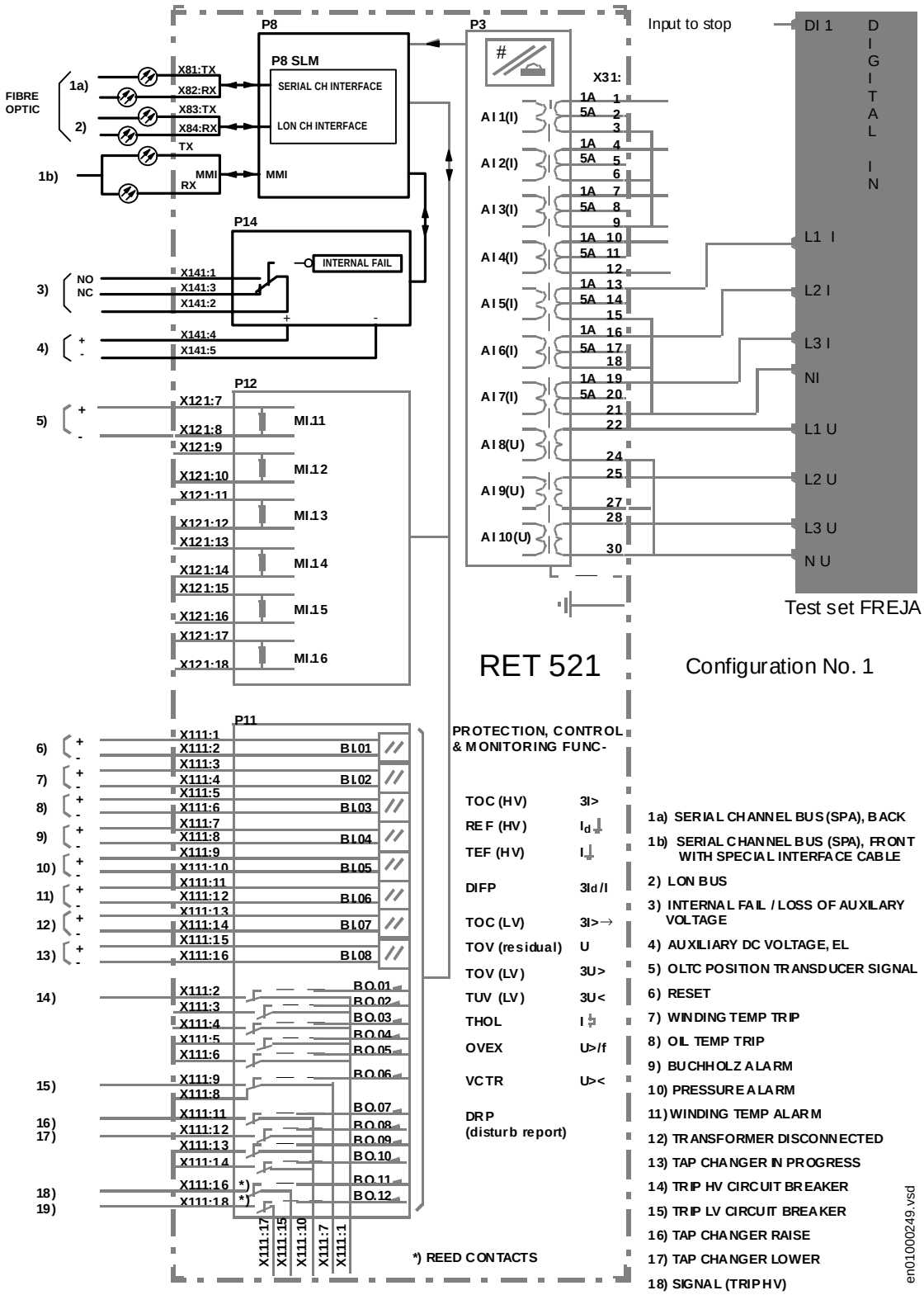

Fig. 1 Example of Freja test set connection to RET 521

5.2 Set active group (GRP)

Configure the GRP--ACTGRPn input signals to the corresponding binary inputs of a terminal and browse the local HMI for the information about the active setting group under the menu:

ServiceReport
ActiveGroup

Connect the appropriate dc voltage to the corresponding binary input of the terminal and observe the information presented on the HMI display. The displayed information must always correspond to the activated input. Check that corresponding output indicates the active group.

5.3 Restricted settings (BLOCKSET)

1. **Configure the MMI--BLOCKSET functional input to the binary input, which is determined by the engineering or the input that is not used by any other function.**
2. **Set the setting restriction to SettingRestrict = Block.**
3. **Connect the rated control DC voltage to the selected binary input.**
4. **Try to change the setting of any parameter for one of the functions. Reading of the values must be possible. The terminal must not respond to any attempt to change the setting value or configuration.**
5. **Disconnect the control DC voltage from the selected binary input.**
6. **Repeat the attempt under item 1.4. The terminal must accept the changed setting value or configuration.**
7. **Depending on the requested design for a complete terminal, leave the function active or reconfigure the function into the default configuration and set the setting restriction function out of operation to SettingRestrict = Open.**

5.4 Terminal hardware structure (THWS)

I/O modules that are not configured are not supervised. When an I/O module is configured as a logical I/O module (AIM, BIM, BOM, IOM, or MIM), the logical I/O modules are supervised.

Each logical I/O module has an error flag that is set if anything is wrong with any signal or the whole module. The error flag is also set when there is no physical I/O module of the right type present in the connected slot.

When the error output is set, *Internal Fail* will be indicated and the erroneous module is pointed out under the HMI menu:

Terminal Status
SelfSuperv

5.5 Configurable logic

You can separately test configurable logic function blocks. To perform the test you must connect all:

- Input signals to the function block to the corresponding binary inputs.
- Output signals to the function block to the corresponding binary outputs of the terminal.

Then check the operation of each function block by applying the rated DC voltage to the corresponding binary inputs and observing the logic status of the corresponding binary outputs.

5.6 Command function (CM/CD)

For each Single Command (CD) function block, it is necessary to connect the output signals to corresponding binary outputs of the terminal.Each function block is then operated from the built-in HMI command menu. Change the function block configuration by using the CAP 531 configuration tool between Off, Not pulsed and Pulsed and observe the status/operation of the connected binary outputs.

Test of the Multiple Command (CM) function block is recommended to be performed in a system, that is, either in a complete delivery system as an acceptance test (FAT/SAT).

5.7 Transformer Differential protection (DIFP)

1 **Go to the Test/TestMode/BlockFunction menu and block the time earth-fault (TEF) and restricted earth-fault (REF) functions, which are configured to the same current transformer inputs as the transformer differential protection.**

2 **Connect the test set for injection of 3-phase current to the current terminals of RET 521 which are connected to the CT's on the HV side of the power transformer.**

3 **Increase the current in phase L1 until the protection function operates and note the operating current.**

4 **Check that trip and alarm contacts operate according to the configuration logic.**

5 **Decrease the current slowly from operate value and note the reset value.**

Depending of the power transformer vector group (Yd etc.), the single phase injection current may appear as differential current in one or two phases and the operating value of the injected single-phase current will be different.

6 **Check in the same way the function by injecting current in phases L2 and L3.**

7 **Inject a symmetrical 3-phase current and note the operate value.**

8 **Connect the timer and set the current to twice the operate value.**

9 **Switch on the current and note the operate time.**

10 **Check in the same way the functioning of the measuring circuits connected to CT's on the LV side and other current inputs to the transformer differential protection.**

11 **Finally check that trip information is stored in the Event menu.**

Information on how to use the event menu is found in the RET 521 operator's manual. See"Reference publications" .

12 **If available on the test set a 2:nd harmonic current of about 20 % (assumes 15 % setting on I1/I2ratio parameter) can be added to the fundamental tone in phase L1. Increase the current in phase L1 above the pickup value measured in point 3 above. If setting " Always" is used the function shall be blocked by the second harmonic blocking function. If setting " Conditionally" is used the function shall be blocked during one minute from the beginning of the test and thereafter trip. Repeat test with current injection in phases L2 and L3 respectively.**

The balancing of currents flowing into and out of the differential zone is checked by primary injection testing, See "Primary injection testing" on page 44.

For more detailed formulas please refere to chapter "Secondary injection into DIFP" and Application manual, RET 521*2.3, chapter appendix.

5.8 Three-phase time overcurrent protection (TOC)

5.8.1 Directional overcurrent function

1 **Connect the test set for injection of symmetrical 3-phase currents to the appropriate current terminals of RET 521 and symmetrical 3-phase voltages to the appropriate voltage terminals.**

2 **Set the phase currents to lag the phase voltages by an angle equal to the set relay characteristic angle (rca) if forward directional function is selected.**

If reverse directional function is selected, set the phase currents to lag the phase voltages by an angle equal to rca +´180 degrees.

3 **Increase the current in phase L1 until the low set stage operates.**

4 **Decrease the current slowly and check the reset value.**

5 **Block high set stage if the injection current will activate the high set stage when testing the low set stage according to below.**

6 **Connect a trip output contact to the timer.**

7 **Set the current to 200 % of the operate value of low set stage , switch on the current and check the time delay.**

For inverse time curves, check the operate time at a current equal to 110% of the operate current at tmin.

8 **Check that trip and start contacts operate according to the configuration logic.**

9 **Reverse the direction of the injection current and check that the protection does not operate.**

10 **Check with low polarization voltage that the function becomes nondirectional or blocked according to the setting.**

11 **Check in the same way the function for phases L2 and L3.**

12 **Release the blocking of the high set stage and check the operate and reset value and the time delay for the high set stage in the same way as for the low set stage.**

13 **Finally check that start and trip information is stored in the Event menu.**

Information on how to use the event menu is found in the RET 521 operators manual. See “Reference publications” .

5.8.2 Nondirectional overcurrent function

Check in principle as instructed above, without applying any polarizing voltage.

5.9 Restricted earth fault protection (REF)

1 **Connect the test set for single-phase current injection to the protection terminals connected to the CT in the power transformer neutral-to-earth circuit.**

2 **Increase the injection current and note the operating value of the protection function.**

3 **Check that all trip and start contacts operate according to the configuration logic.**

4 **Decrease the current slowly from operate value and note the reset value.**

5 **Connect the timer and set the current to twice the operate value.**

6 **Switch on the current and note the operate time.**

7 **Connect the test set to terminal L1 and neutral of the 3-phase current input configurated to the REF protection. Also inject a current about 3 to 4 % of rated current in the neutral-to-earth circuit with the same phase angle and with polarity corresponding to an internal fault.**

Increase the current injected in L1, and note the operate value. Decrease the current slowly and note the reset value.

8 **Inject current into terminals L2 and L3 in the same way as in point 7 above and note the operate and reset values.**

9 **Inject a current equal to 10 % of rated current into terminal L1.**

10 **Inject a current in the neutral-to-earth circuit with the same phase angle and with polarity corresponding to an external fault.**

11 **Increase the current to five times the operating value and check that the protection does not operate.**

12 **Finally check that trip information is stored in the Event menu.**

Information on how to use the event menu is found in the RET 521 operators manual. See “Reference publications” .

5.10 Earth fault time current protection (TEF)

5.10.1 Directional earth fault current function

1 **Connect the test set for single-phase current injection to the appropriate protection terminals.**

If the function is configured to a 3-phase current input, connect the injection current to terminals IL1 and neutral.

2 **Set the polarizing voltage to 2% of rated voltage Ur and set the injection current to lag the voltage by an angle equal to the set relay characteristic angle (rca) if forward directional function is selected.**

If reverse directional function is selected, set the injection current to lag the polarizing voltages by an angle equal to rca +180 degrees.

3 **Increase the current in phase L1 and note the operate value of the low set stage.**

4 **Decrease the current slowly and note the reset value.**

5 **Note the operating value when injecting current into terminals L2 and L3 with polarizing voltage connected to terminals L2 respectively L3.**

6 **Block the high set stage if the injection current will activate the high set stage when testing the low set stage according to below.**

7 **Connect a trip output contact to the timer.**

8 **Set the current to 200% of the operate value of the low set stage, switch on the current and check the time delay.**

For inverse time curves, check the operate time at a current equal to 110% of the operate current of tmin.

9 **Check that all trip and start contacts operate according to the configuration logic.**

10 **Reverse the direction of the injection current and check that the protection does not operate.**

11 **Check that the protection does not operate when the polarizing voltage is zero.**

12 **Release the blocking of the high set stage and check the operate, reset value and the time delay for this stage in the same way as for the low set stage.**

13 **Finally check that start and trip information is stored in the Event menu.**

Information on how to use the event menu is found in the RET 521 operators manual. See “Reference publications” .

5.10.2 Check of the nondirectional current function

Check in principle as instructed above, without applying any polarizing voltage.

5.11 Single/three-phase overvoltage protection (TOV)

5.11.1 Check of the 3-phase overvoltage function

1 **Connect the test set for 3-phase voltage injection to the appropriate terminals.**

2 **Increase the voltage in phase L1 until the low set stage operates and note the operate value.**

3 **Decrease the voltage slowly and check the reset value.**

4 **Block of the high set stage if the injection voltage will activate the high set stage when testing the low set stage according to below.**

5 **Connect a trip output contact to the timer.**

6 **Set the voltage to 160% of the operate value of the low set stage, switch on the voltage and check the time delay.**

For inverse time curves, check the operate time at a voltage equal to 110% of the operate voltage of tmin.

7 **Check that all trip and start contacts operate according to the configuration logic.**

8 **Check in the same way the functions for phases L2 and L3.**

If the function is configured to give trip only when all phase voltages exceed the limit, the time measurement is done with symmetrical 3-phase voltage injection.

9 **Release the blocking of the high set stage and check the operate and reset value and the time delay for this stage in the same way as for the low set stage.**

10 **Finally check that start and trip information is stored in the Event menu.**

Information on how to use the event menu is found in the RET 521 operators manual. See “Reference publications” .

5.11.2 Check of the single-phase overvoltage function

Connect a single-phase injection voltage the appropriate terminals and test the function in principle as stated above.

5.11.3 Using TOV as neutral overvoltage protection

1 **Connect the test set for single-phase voltage injection to the appropriate protection terminals.**

If the function is configured to a 3-phase voltage input, connect the single phase voltage input to terminals UL1 and neutral.

2 **Increase the injection voltage until the low set stage operates and note the operate value.**

Decrease the voltage slowly and note the reset value.

3 **Connect the voltage to terminals U2 and then U3 and note the operate and reset values.**

4 **Block the high set stage if the injection voltage will activate the high set stage when testing the low set stage according to below.**

5 **Connect a trip output contact to the timer.**

6 **Set the voltage to 120 % of the operate value of the low set stage and check the time delay.**

For inverse time curves, check one more point, e.g. at voltage 1,5 times the low set stage.

7 **Check that all trip and alarm contacts operate according to the configuration logic.**

8 **Release the blocking of the high set stage and check the operate and reset value and the time delay for this stage in the same way as for the low set stage.**

9 **Finally check that start and trip information is stored in the Event menu.**

Information on how to use the event menu is found in the RET 521 operators manual. See “Reference publications” .

5.12 Single/three-phase time undervoltage protection (TUV)

5.12.1 Check of the 3-phase undervoltage function

1 **Connect the test set for 3-phase voltage injection to the appropriate terminals if the undervoltage function is configured to a 3-phase voltage input.**

Start with a symmetrical 3-phase injection voltage higher than the high set stage.

2 **Decrease the injection voltage in phase L1 until the high set stage operates and note the operating value.**

3 **Increase the voltage slowly and note the reset value.**

4 **Block the low set stage.**

5 **Set the symmetrical 3-phase voltage to 110% of the operate value of the high set stage, and connect a trip output contact to the timer.**

6 **Switch off the voltage in phase L1and check the time delay tDefHigh.**

7 **Check that all trip and start contacts operate according to the configuration logic.**

8 **Check in the same way the functions for phases L2 and L3.**

9 **Release the low set stage and disconnect the trip input to the timer.**

Start with a symmetrical 3-phase injection voltage higher than the low set stage.

10 **Decrease the injection voltage in phase L1 until the stage the low set stage operates and note the operating value.**

11 **Increase the voltage slowly and note the reset value.**

12 **Set the symmetrical 3-phase voltage to 110% of the operate value of the high set stage, and connect a trip output contact to the timer.**

13 **Switch off the voltage in phase L1and check the time delay tDefLow.**

14 **Check that all trip and start contacts operate according to the configuration logic.**

15 **Check in the same way the functions for phases L2 and L3.**

16 **Finally check that start and trip information is stored in the Event menu.**

Information on how to use the event menu is found in the RET 521 operators manual. See “Reference publications” .

5.12.2 Check of the single-phase undervoltage function

1 **Connect a single-phase injection voltage to the input terminals.**

The high and low set functions are in principle tested in the same way as described above for the 3-phase protection function.

5.13 Thermal overload protection (THOL)

1 **Connect symmetrical 3-phase currents to the appropriate current terminals of RET 521.**

2 **Set the Time constant 1 and Time Constant 2 temporarily to 1 minute.**

3 **Set the 3-phase injection currents slightly lower than the set operate value of stage Ib1, increase the current in phase L1 until stage Ib1 operates and note the operate value.**

4 **Decrease the current slowly and note the reset value.**

Check in the same way the operate and reset values of Ib1 for phases L2 and L3.

5 **Activate the digital input for cooling input signal to switch over to base current Ib2.**

6 **Check for all three phases the operate and reset values for Ib2 in the same way as described above for stage Ib1.**

7 **Deactivate the digital input signal for stage Ib2.**

8 **Set the time constant for Ib1 in accordance with the setting plan.**

9 **Set the injection current for phase L1 to 1,50 x Ib1.**

10 **Connect a trip output contact to the timer and the output of contacts Alarm 1 and Alarm 2 to digital inputs in Freja.**

Read the heat content in the thermal protection from the built-in HMI and wait until the content is zero.

11 **Switch on the injection current and check that Alarm 1 and Alarm 2 contacts operate at the set percentage level and that the operate time for tripping is in accordance with the set Time Constant 1.**

With setting Itr = 101% Ibx and injection current 1,50 x Ib1, the trip time from zero content in the memory shall be 0,60 x Time Constant 1.

12 **Check that all trip and alarm contacts operate according to the configuration logic.**

13 **Switch off the injection current and check from the service menu readings of thermal status and THOL LOCKOUT that the lockout resets at the set percentage of heat content.**

14 **Activate the digital input for cooling input signal to switch over to base current Ib2.**

Wait 5 minutes to empty the thermal memory and set Time Constant 2 in accordance with the setting plan.

15 **Test with injection current 1,50 x Ib2 the thermal alarm level, the operate time for tripping and the lockout reset in the same way as described for stage Ib1.**

16 **Finally check that start and trip information is stored in the Event menu**

Information on how to use the event menu is found in the RET 521 operators manual. See “Reference publications” .

5.14 Overexcitation protection (OVEX)

1 **Enable frequency measuring (FRME function)**

2 **Connect a symmetrical 3-phase voltage input from the test set to the appropriate connection terminals if the overexcitation function is configured to a 3-phase voltage input.**

A single-phase injection voltage is applied if the function is configured to a phase-to-phase voltage input.

The function is conveniently tested using rated frequency for the injection voltage and increasing the injection voltage to get the desired overexcitation level.

3 **Connect the alarm contact to the timer and set the time delay for the alarm temporarily to zero.**

4 **Increase the voltage and note the operate value Emaxcont.**

5 **Reduce the voltage slowly and note the reset value.**

6 **Set the alarm time delay to the correct value according to the setting plan and check the time delay, injecting a voltage corresponding to 1,2 x Emaxcont.**

7 **Connect a trip output contact to the timer and set the time delay tmin temporarily to 0,5 s.**

8 **Increase the voltage and note the operate value Emax.**

9 **Reduce the voltage slowly and note the reset value.**

10 **Set the time delay to the correct value according to the setting plan and check the time delay tmin, injecting a voltage corresponding to 1,2 x Emax.**

11 **Check that trip and alarm contacts operate according to the configuration logic.**

12 **Set the cooling time constant temporarily to min value (1min.) to empty the thermal content quickly.**

13 **Wait a time equal to 6 times Tcool, switch on a voltage 1,15 x Emaxcont and check the inverse operate time.**

Wait until the thermal memory is emptied, set the cooling time constant according to the setting plan and check another point on the inverse time curve injecting a voltage 1,3 x Emaxcont.

14 **Finally check that start and trip information is stored in the Event menu.**

Information on how to use the event menu is found in the RET 521 operators manual. See “Reference publications” .

5.15 Voltage control (VCTR)

Secondary currents have to be measured respectively. The function also includes an option for parallel control of power transformer based on the minimum circulating current method with terminal-to-terminal communication.

The busbar voltage UB is a shorter notation for the measured voltages Ua, Ub, Uc or Uij, where Uij is the phase-to-phase voltage, Uij = Ui -Uj, or Ui, where Ui is one single phase to ground voltage.

IL is a shorter notation for the measured load current; it is be used instead of the three phase quantities Ia, Ib, Ic or the two phase quantities Ii and Ij, or single phase current Ii.

The VCTR in single operation mode assumes that the configuration consists of one tap changer on a single power transformer,

The test consists mainly in:

1 Changing the voltage at the analogue inputs of the protection , either increasing or decreasing it.
2 Checking that the corresponding signals (Lower or Raise) are issued by the voltage control function.

5.15.1 Procedure

Before starting any test, check the set Output duration tPulseDur to be suitable to the actual tap changer step requirements.

5.15.2 Secondary test

Regulating limits and actions.

Operation of VCTR.

When the load voltage, UL, stays within the interval between [U1, U2] (See “Voltage Scale” on page 93., in Application Manual, 1MRK 504 021-UEN) no actions will be taken. If UL < U1 or UL > U2, a command timer will start (constant time or inverse time) The command timer will be running as long as the measured voltage stays outside the inner deadband, which also is settable, otherwise the command will be cancelled. This procedure will be repeated until the measured voltage is brought back within the inner deadband.

5.15.3 Check the activation of the Voltage Control Operation

1 Operation = 1

(When the parameter Operation is = 0 the Voltage Control function is inoperative)

The test set is connected but no voltage is applied: The parameter" BlockCond" will be shown in the built in HMI (value = 1).

2 Check that the U_{set} corresponds to the system voltage.

3 Apply the corresponding voltage

(three phase to ground, phase to phase voltage or phase to earth voltage depending on the Function Selector setting; 0, 1, 2 or 3).

The parameter "Block Cond " in the Built in HMI will assume value 0 (zero).

4 Apply a voltage slightly below U_{block} :

The parameter "Block Cond " in the Built in HMI will assume value 1.

5.15.4 Check the setting of parameter U_{min} and U_{max}

1 Decrease the applied voltage slightly below the U_{min} value

The command will be inhibited independently of control mode

2 Increase the voltage to nominal value

3 Check the setting of parameter U_{max}

4 Increase the applied voltage slightly above the U_{max} value

The command will be inhibited independently of control mode. The VCTR function will try to decrease the voltage to nominal value U_{set}.

The delay time for operation will be time t2 (See setting of constant or inverse time characteristic).

5 Decrease the applied voltage about 1% below U_{set}

The VCTR function will try to increase the voltage to nominal value U_{set}.

After Time t1 has elapsed the RAISE output will show a positive voltage (value 1).

6 Repeat the operation increasing the applied voltage 1% above U_{set}

The VCTR function will try to decrease the voltage to nominal value U_{set}.

After time t1 has elapsed the LOWER output will show a positive voltage (value 1).

If the input signal DISC, indicating disconnected transformer is set High (=1) no automatic control function is allowed.

5.15.5 Overcurrent blocking

1 Inject a current higher than the Iblock setting.

The VCTR function will be blocked and the parameter Iblock assume status 1. IBLK output will show a positive voltage (value 1). Both automatic and manual mode will be blocked.

Beside the status of the configured BOs, signals issued by the VCTR can be checked via the HMI in the Disturbance Report and Service Report.

5.15.6 Load drop compensation function, LDC

This function can be tested directly with operational currents i.e. with the power transformer in service and loaded.

When the system is carrying load there will be a difference between the busbar voltage (transformer output) and the voltage at the load point.This difference is load dependent and can be compensated.

The load current is fed into the VCTR function where parameters corresponding to the line data for resistance and inductance are set.

The voltage drop calculated by the LDC will be proportional to the voltage drop in the system up to the load point.

In the terminal this voltage will be subtracted from the measured busbar voltage and the result, corresponding to the voltage at load point, presented to the VCTR function. This voltage will be lower (if resitive or inductive load current is applied) than the Uset voltage and VCTR will increase the voltage in order to achieve the correct system voltage at the load point.

1 Set the line data (RL + j XL) for the LDC.

2 Check the position of the tap changer.

3 Read the busbar and load voltage (CompVoltage) in the HMI under Service Report

Note the values and the difference. The voltage at the busbar will be the system voltage corresponding to U_{set}. At load point it will be lower than the system voltage.

4 Set R and XL for the LDC to 0 (Zero)

5 Check again busbar and load voltage in the in the HMI.

a) Both shall be higher than the first readings. At load point it will be the system voltage and at the busbar the system voltage increased with the line voltage drop.

b) The VCTR will have operated.

6 Check the position of the tap changer.

5.15.7 Testing the LDC function

1 Check the correct setting of Uset and Udeadband

2 Switch the tap changer control to manual mode and step up to the correct tap changer position.

To determine whether the currents for the LDC are correctly oriented the transformer must be subject to an inductive/resistive load.

3 Set R_{line} and X_{line} for the LDC to 0 (Zero).

4 Manually operate the tap changer so that the voltage at the transformer corresponds to the regulating value Us.

Neither the "Raise" nor the "Lower" command shall be operating. (Check the configured BOs and the Event Report)

The test of the LDC should be carried out with a current at the time from the main transformers in L1 and L3 phase.

a) When measuring the current from the L1 phase the main CT in L3 phase must have its secondary winding short circuited and the cables to the RET terminal disconnected.

b) When measuring the current from the L3 phase the main current transformer in L1 phase must have its secondary winding short-circuited and the cables to the terminal disconnected in the same way.

1 Increase slowly the setting of Us until the RAISE output activates.

2 Modify the connections according to a) above

3 Set R_{line} and X_{line} to zero.

4 Increase slightly the setting Us so that the RAISE output is on the verge of activation

The RAISE output will activate when either R_{line} or X_{line} will be set to the maximum value.

The operation can be checked at the corresponding binary output. and in the Event Report.

If the RAISE output does not activate reset both R_{line} and X_{line} to Zero and set Uset to a little lower value until the Lower circuit is on the verge of operation.

If the LOWER output activates when either R_{line} or X_{line} have a high setting the current circuits of the L1 phase are incorrect and must be reversed.

The operation can be checked at the corresponding binary output and in the Event Report.

5 **Restore the original connections at the CT in phase T**

6 **Modify the connections according to b)**

7 **Increase slowly the setting of Us until the "Raise" circuit is on the verge of operation.**

8 **Set R_{line} and X_{line} to zero.**

9 **Increase slightly the setting Us so that the Raise function is on the verge of operation**

The Raise circuit will operate when either R_{line} or X_{line} will be set to the maximum value.

The operation can be checked at the corresponding B.O. and in the Event Report.

10 **Set back Rline and X_{line} to Zero.**

11 **Decrease slowly the setting of Us until the "Lower" circuit is on the verge of operation.**

12 **Increase the setting of X_{line} to its maximum until the "Lower" circuit operates.**

If the operation of Raise and Lower is inverted (Lower instead of Raise and Raise instead Lower) the current connections have to be reversed.

13 **Restore the original connections at the CT in phase T**

After these tests the individually operating RET 521 can be taken in to service

5.16 Voltage control of Parallel Transformers

5.16.1 Minimum Circulating Current (MCC) method

The method is used when more than one transformers are to be parallel controlled and complete load drop compensation is required. A maximum of four transformers can be controlled simultaneously.

To use this method, each transformator protection terminal must be connected to the station communication bus, in order to exchange data.

Check all settings and signals according to following tables:

- Settings Parallel Control
- Connectable
- Output signals Parallel Control
- Service Report Parallel Control

If all previous tests have been successful the VCTRs of the transformer group can be checked during load.

1 **Set Uset and Udeadband to the correct operate values.**

2 **Set the Overcurrent blocking level to the correct operate value.**

3 **Set R_{line} and X_{line} to 0**

4 **Set the parallel operation Off, i.e.parameter Operation PAR = Off**

5 **Set CtrlMode = Manual**

6 **Connect all transformers to the Busbar**

- Step up the Tap Changer for transformer T1, two steps above the setting for the other transformers.
- Change the setting of Uset to correspond to the manually determined busbar voltage. Check it in the:

Service report
VCTR/Measur
BusbarVoltage

c) Set in all the parallel connected bays the parameter

OperationPAR = On

At transformer T1 adjust the parameter Comp so that the LOWER output is activated due to circulating current.

7 **Set back Uset to the correct setting and step down the tap changer to its normal position.**

If there are three transformers connected in parallel, and the tap changer of transformer T1 lies two steps over the tap changer of T2 and T3, the circulating current detected by the VCTR for T1 will be the sum (with opposite sign) of the current measured at T2 and T3. The currents measured at T2 and T3 will ideally be about the same values.

If the voltage is close to the upper limit of the Udeadband the tap changer of T1 will try to decrease the controlled voltage, but in the opposite case, i.e. the voltage is close to the lower limit of Udeadband, the tap changer at T1 will not try to decrease the controlled voltage.

The tap changer for T2 and T3 will not operate due to the fact that the detected circulating current will be half of the current detected at T1.

The setting of the parameter Comp then might need to be increased a little.

d) The setting of the parameter Comp at T2 and T3 will be carried out in the same manner as at T1. According to the described procedure when the Tap Changer of one transformer lies two steps above the others, it shall automatically step down.

When there are only two transformers in the group either shall one step down or the other step up depending on the voltage level at the VCTR.

At least one Tap Changer step difference between the different transformers should be allowed in order to avoid the Tap Changers to operate too often.

If the allowed difference is for example two steps, the Tap Changer shall be stepped up three steps when setting parameter Comp.

This applies to all the VCTR in the same group.

After test under 6.4.1 has been carried out the VCTR can be put in service.

1 **Check again the correct settings of Uset, Udeadband, the sending and receiving intervals TXINT and RXINT, the blocking settings for overcurrent and undervoltage, the compensating parameters R_{line} and X_{line}.**
2 **Switch back to CtrlMode = 1 for automatic operation and set the parameter OperationPAR = 1 for parallel control of the tap changers.**

5.17 Event function (EV)

During testing, the terminal can be set in Test Mode from the Parameter Setting Tool (PST) in CAP 535 or from SMS. The functionality of the event reporting during Test Mode is set as follows:

- *Use event masks;* the normal reporting of events, that is, the events are reported as defined in the database. An event mask can be set individually for each available signal in the terminal. The setting of the event mask can be performed from the PST or SMS. All event mask settings are treated commonly for all communication channels of the terminal.
- *Report no events;* means blocking of all events in the terminal.
- *Report all events;* means that all events, that are set to OnSet/OnReset/OnChange are reported as OnChange, that is, both at set and reset of the signal. For double indications when the suppression time is set, the event ignores the timer and is reported directly. Masked events are still masked.

Test of the Event function blocks are recommended to be performed in a system, that is, either in a complete delivery system as an acceptance test (FAT/SAT).

5.18 Disturbance Report (DRP)

The function can preferably be tested when tests of other functions are carried out. Test of other functions will generate suitable trig conditions, events and analogue quantities for the disturbance recorder.

The following points should be checked:

- the function operates when enabled and does not operate when disabled.
- events are recorded and the capacity is correct.
- indications are available.
- trip values correspond to the injected quantities.
- re-trig operates when enabled and does not when disabled.
- recording times including the limit time.

In case the optional disturbance recorder is included, the following should be checked:

- recording is generated for all trig conditions.
- recording can be analyzed using REVAL.

5.19 Remote communication (RC)

5.19.1 Front communication

The front communication function is a standard function in the RET 521 terminal. For the communication the following is required:

- a special interface cable, optically isolating the PC from the terminal, which minimizes interference
- a PC with suitable software installed, as listed below.

Suitable software:

- CAP535 (configuration tool CAP 531 and Parameter setting Tool (PST))
- SMS510 (disturbance reading is included)
- REVAL (for displaying disturbance files)

The communication shall work properly provided that

- the slave number and baud rate values match each other in the terminal and tools.
- communication parameters are correctly set in the terminal and the used tools.

5.19.2 Communication via the rear ports

5.19.2.1 SPA communication

SPA communication is normally used by SMS. The communication link is optical fibre within the substation and switched telephone network for communication outside the substation.

The test can only be carried out when the whole communication system is installed. Thus, the test is a system test and is not dealt with here.

5.19.2.2 LON communication

LON communication is normally used by SCS. The communication link is optical fibre within the substation.

The test can only be carried out when the whole communication system is installed. Thus, the test is a system test and is not dealt with here.

5.20 Secondary testing of several setting groups

All secondary testing of the functions in one setting group should be made before starting to test the next group.

5.21 Check of the trip circuits

Check that the circuit breakers of the power transformer operate when the tripping relays are activated. The trip relays are conveniently activated by secondary injection to activate a suitable protection function.

6 Primary injection testing

A test with primary current through the power transformer constitutes a final check that the current circuits are correctly connected and balanced so that the currents in the differential circuits will be small in the case of a fully operational power transformer. The overcurrent protection on the injection side should be activated with a short time delay on the low set stage and the differential protection blocked when performing the test.

1 **Apply a three-phase injection voltage source outside the current transformers on one side of the power transformer and a three-phase short-circuit outside the current transformers on the other side of the power transformer.**

The injection current I_{inj} in per cent of rated transformer current on the injection side will be

$$I_{inj} = 100 / Z_k \times U_1 / U \ (\%)$$

where Zk = short-circuit impedance in per cent and U_1 / U is the ratio between rated voltage of the power transformer on the injection side and the injection voltage.

The injection current should be at least 10% of rated transformer current and the differential current in all phases should be negligible. If the differential current is small, check the influence of the tap-changer position.

A differential current equal to twice the injection current probably indicates wrong polarity of the CT's on one side. A differential current in all three phases equal to the injection current probably indicates a configuration not corresponding to the connection group of the power transformer.

2 Set the time delay of the low set stage in accordance with the setting plan and release the differential function when satisfactory balance is obtained.

The power transformer can now be connected to the network.

Reference publications

Technical Overview Brochure, Series RE 500 Mechanical design and mounting accessories, 1MRK 514 003-BEN

Technical Overview Brochure, Combiflex Connection and installation components, 1MRK 513 003-BEN

User´s manual CAP 531*1.6, 1MRK 511 105-UEN

Operators manual SMS510 1MRS 751 267-MUM

Installation & commissioning manual, SMS510 1MRS 751 265-MEN

Operator’s manual RET 521*2.3, 1MRK 504 015-UEN

Technical description manual RET 521*2.3, 1MRK 504 016-UEN

Application manual RET 521*2.3, 1MRK 504 021-UEN

LNT 505, LON Configuration Tool, 1MRS 151 400

SLDT, LON configuration module REx 500, 1MRK 001 700-A

Product:

ABB Automation Products AB would appreciate your comments on this product. Please grade the following questions by selecting one alternative per category. Your answer will enables us to improve our products.

How do you grade the quality of the product?

	Excellent				Poor
Total impression	☐	☐	☐	☐	☐
Useability	☐	☐	☐	☐	☐
Functionality	☐	☐	☐	☐	☐
Human-machine interface	☐	☐	☐	☐	☐

Comments: _____

_____

_____

Remove from binder

How do you grade the quality of the documentation?

	Excellent				Poor
Total impression	☐	☐	☐	☐	☐
Layout	☐	☐	☐	☐	☐
Illustrations	☐	☐	☐	☐	☐
Readability	☐	☐	☐	☐	☐
Easy to find	☐	☐	☐	☐	☐
Content structure	☐	☐	☐	☐	☐

Comments: _____

_____

_____

Suggestions for improvments:

Remove from binder

Please send this report to:

ABB Automation Products AB
Substation Automation Divistion
SA-T, Support Line
SE-721 59 Västerås
Sweden

By facsimile:

Send to + 46 21 14 69 18

Memo

Secondary Injection for DIFP function in RET 521 Version 2.3

1. Introduction

This document explains how to calculate minimum operate current for DIFP function, for different types of ideal, internal faults injected from one side only. Three winding application will be explained, but the formulas can be used for two winding cases as well.

2. Required input quantities and symbols used in this document

The following settings are necessary as input data in the calculation:

- Power transformer data for HV winding (i.e. winding 1 in PST): S_{r1}, U_{r1}, I_{r1}
- Power transformer data for MV winding (i.e. winding 2 in PST): S_{r2}, U_{r2}, I_{r2}
- Power transformer data for LV winding (i.e. winding 3 in PST): S_{r3}, U_{r3}, I_{r3}
- HV CT rated primary and secondary currents: $1CT_{rPri}$, $1CT_{rSec}$
- MV CT rated primary and secondary currents: $2CT_{rPri}$, $2CT_{rSec}$
- LV CT rated primary and secondary currents: $3CT_{rPri}$, $3CT_{rSec}$

For three winding transformers the value for S_{max} is defined as:

S_{max} =max[S_{r1} ; S_{r2} ; S_{r3}] (i.e. maximum value of the three set values).

All formulas in this document will be applicable to two winding transformers as well with the following assumption: S_{r1}= S_{r2}= S_{max}.

The formulas in this document shall to be independent of side therefore the more general values S_{rSide}, U_{rSide}, I_{rSide} will be used, where suffix “Side” should be replaced with corresponding number of the winding in which the injection is done.

As well the more general values for CT data $SideCT_{rPri}$, $SideCT_{rSec}$ will be used, where prefix “Side” should be replaced with corresponding number of the winding in which the injection is done.

It is as well assumed the following regarding the test equipment:

The currents are injected only in one three phase CT input at the time regardless if the DIFP is with “T” connection.

Secondary injected current in phase L1 has RMS magnitude $I_{L1\_Test\_Set}$ (in CT secondary Amps) and Phase Angle $A_{L1\_Test\_Set}$ (in degrees)

Secondary injected current in phase L2 has RMS magnitude $I_{L2\_Test\_Set}$ (in CT secondary Amps) and Phase Angle $A_{L2\_Test\_Set}$ (in degrees)

Secondary injected current in phase L3 has RMS magnitude $I_{L3\_Test\_Set}$ (in CT secondary Amps) and Phase Angle $A_{L3\_Test\_Set}$ (in degrees)

Corresponding “injected” primary currents can be calculated as:

$I_{L1} = I_{L1\_Test\_Set} \times (SideCT_{rPri} / SideCT_{rSec})$ with phase angle $A_{L1\_Test\_Set}$

$I_{L2} = I_{L2\_Test\_Set} \times (SideCT_{rPri} / SideCT_{rSec})$ with phase angle $A_{L2\_Test\_Set}$

$I_{L3} = I_{L3\_Test\_Set} \times (SideCT_{rPri} / SideCT_{rSec})$ with phase angle $A_{L3\_Test\_Set}$

The minimum pickup value for DIFP function is defined by setting I_{dmin}[%] under DIFP function settings.

$I_{dmin}[pu] = I_{dmin}[\%] / 100$

$I_{dmin}[Amps] = I_{dmin}[pu] \times I_{r1}$

In Version 2.3, winding one (i.e. Primary Winding) is normally used as a reference!!!

3. General formula for calculation of the Bias Current for injection into one three-phase CT input

When current is injected only into one three-phase current input, the bias current in pu is taken as maximum pu current on the transformer winding rating (i.e. measured primary current divided by rated primary current of the winding where injection is performed). It is as well necessary to compensate for possible difference of the rated powers between the windings, therefore the factor S_{rSide} / S_{max} have to be introduced in the calculation. For injection from one set of CT only the following formula is applicable:

$Ibias\ [pu] = (S_{rSide} / S_{max}) \times \{\max [I_{L1} / I_{rSide} ; I_{L2} / I_{rSide}; I_{L3} / I_{rSide}]\}$

$Ibias\ [Amps] = Ibias\ [pu] \times I_{r1}$ (visible on HMI under Service Report for DIFP function)

4. General formula for calculation of the Differential Current for injection into one three-phase CT input

In RET 521 Version 2.3 the differential current is normally related to the HV side (winding 1 in the setting software tool-PST). It can be shown that the module of the differential current in phase L1, for this type of injection, related to the winding 1 side can be calculated as per the following formula:

$$I_{Diff}L1[Amps] = Module\_of\left\{\frac{S_{r1}}{S_{\max}} * \frac{U_{rSide}}{U_{r1}} * \frac{1}{k} * \left[\vec{I}_{L1} - \vec{I}_{y}\right]\right\}$$ where

- I_y is an another current from the same three-phase CT input group, which can have one of the following values depending on the set value for the transformer vector group under settings for “Power Transformer Data” and the set value for the parameter “ZSCSub” under settings for DIFP function:

  - When for all three windings the set vector group have the same connection type (i.e. all star or all delta connected; for example Yy0y0 or Dd6d0)

    $\vec{I}_y = \frac{\vec{I}_{L1} + \vec{I}_{L2} + \vec{I}_{L3}}{3} = \vec{I}_{Zero\_Sequence}$ when “ZSCSub” is set to “On” or

    $\vec{I}_y = 0$ when “ZSCSub” is set to “Off”

  - When for three windings the set vector group have different connection types (i.e. star-delta connections; for example Yy0d1 or Dy5d6)

    $\vec{I}_y = \frac{\vec{I}_{L1} + \vec{I}_{L2} + \vec{I}_{L3}}{3} = \vec{I}_{Zero\_Sequence}$ for injection into DELTA connected winding when parameter “ZSCSub” under DIFP settings is set to “On”

    $\vec{I}_y = 0$ for injection into DELTA connected winding when parameter “ZSCSub” under DIFP settings is set to “Off”

    $\vec{I}_y = \vec{I}_{L2}$ or $\vec{I}_y = \vec{I}_{L3}$ for injection into STAR connected winding regardless the set value for parameter “ZSCSub”. Exactly which phase current should be taken depends on the transformer phase shift (i.e. Yd11 or Yd1).

- k is a constant witch can have one of the following two values depending on the value for I_y

  when $\vec{I}_y = \frac{\vec{I}_{L1} + \vec{I}_{L2} + \vec{I}_{L3}}{3} = \vec{I}_{Zero\_Sequence}$ or $\vec{I}_y = 0$ then $k = 1$

  when $\vec{I}_y = \vec{I}_{L2}$ or $\vec{I}_y = \vec{I}_{L3}$ then $k = \sqrt{3}$

The differential current in pu can be calculated as follows:

$$I_{Diff} L1[pu] = \frac{I_{diff} L1[Amps]}{I_{r1}}$$

5. Detailed Calculation for Single Phase to Ground Fault

Calculation will be done for phase L1 only. Similar calculations can be performed for other two phases.

For this type of fault the following hold true:

$\vec{I}_{L1} = I_{L1}$; I_{L2}=0 and I_{L3}=0 therefore $\vec{I}_{Zero\_Sequence} = \frac{\vec{I}_{L1}}{3} = \frac{I_{L1}}{3}$

Ibias [pu] = (S_{rSide}/S_{max}) * [I_{L1}/ I_{rSide}]

Ibias [Amps] = Ibias [pu] x I_{r1}

5.1 Idiff calculation for winding where $\vec{I}_y = 0$ (i.e. k=1 & “ZSCSub”=“Off”)

$$I_{Diff} L1[Amps] = \frac{S_{r1}}{S_{\max}} \times \frac{U_{rSide}}{U_{r1}} \times I_{L1}$$

To obtain pickup the following should be true:

$$I_{Diff} L1[Amps] = I_{d\min}[Amps]$$

Therefore:

$I_{d\min}[pu] \times I_{r1} = \frac{S_{r1}}{S_{\max}} \times \frac{U_{rSide}}{U_{r1}} \times I_{L1}$ now we can calculate the following:

$I_{L1} = \frac{U_{r1} \times I_{r1}}{S_{r1}} \times \frac{S_{\max}}{U_{rSide}} \times I_{d\min}[pu]$ Current I_{L1} in primary Amps.

If the data for primary winding are set in the usual way for three-phase system (i.e. $S_{r1} = \sqrt{3} \times U_{r1} \times I_{r1}$) than the following formula can be derived:

$I_{L1} = \frac{1}{\sqrt{3}} \times \frac{S_{\max}}{U_{rSide}} \times I_{d\min}[pu]$ (Current I_{L1} in primary Amps)

Finally, if the data for winding in which injection is performed are set in the usual way for three-phase system (i.e. $S_{rSide} = \sqrt{3} \times U_{rSide} \times I_{rSide}$) than the following simplified formula can be used:

$I_{L1} = \frac{S_{\max}}{S_{rSide}} \times I_{rSide} \times I_{d\min}[pu]$ (Current I_{L1} in primary Amps)

$I_{L1\_Test\_Set}$ = I_{L1} x ($SideCT_{rSec}$ / $SideCT_{rPri}$) This defines the pickup in secondary Amps

It should be noted that for this case the following would hold true:

$I_{Diff}L2 = I_{Diff}L3 = 0$ (i.e. DIFP will have START signal set to one for phase L1 only)

5.2 Idiff calculation for winding where $\vec{I}_y = \frac{\vec{I}_{L1} + \vec{I}_{L2} + \vec{I}_{L3}}{3} = \vec{I}_{Zero\_Sequence}$ (k=1 & “ZSCSub”=“On”)

$I_{Diff}L1[Amps] = \frac{S_{r1}}{S_{\max}} \times \frac{U_{rSide}}{U_{r1}} \times \frac{2}{3} I_{L1}$

To obtain pickup the following should be true:

$$I_{Diff}L1[Amps] = I_{d\min}[Amps]$$

Therefore:

$I_{d\min}[pu] \times I_{r1} = \frac{S_{r1}}{S_{\max}} \times \frac{U_{rSide}}{U_{r1}} \times \frac{2}{3} I_{L1}$ now we can calculate the following:

$$I_{L1} = \frac{3}{2} \times \frac{U_{r1} \times I_{r1}}{S_{r1}} \times \frac{S_{\max}}{U_{rSide}} \times I_{d\min}[pu]$$ Current I_{L1} in primary Amps.

If the data for primary winding are set in the usual way for three-phase system (i.e. $S_{r1} = \sqrt{3} \times U_{r1} \times I_{r1}$) than the following formula can be derived:

$$I_{L1} = \frac{\sqrt{3}}{2} \times \frac{S_{\max}}{U_{rSide}} \times I_{d\min}[pu]$$ (Current I_{L1} in primary Amps)

Finally, if the data for winding in which injection is performed are set in the usual way for three-phase system (i.e. $S_{rSide} = \sqrt{3} \times U_{rSide} \times I_{rSide}$) than the following simplified formula can be used:

$$I_{L1} = \frac{3}{2} \times \frac{S_{\max}}{S_{rSide}} \times I_{rSide} \times I_{d\min}[pu]$$ (Current I_{L1} in primary Amps)

$I_{L1\_Test\_Set}$ = I_{L1} x ($SideCT_{rSec}$ / $SideCT_{rPri}$) This defines the pickup in secondary Amps

It should be noted that for this case the following would hold true:

$I_{Diff}L2 = I_{Diff}L3 = \frac{I_{Diff}L1}{2}$ (i.e. DIFP will have START signal set to one for phase L1 only)

5.3 Idiff calculation for winding where $\vec{I}_y = \vec{I}_{L2}$ or $\vec{I}_y = \vec{I}_{L3}$ ($k = \sqrt{3}$ & "ZSCSub" has no influence)

$$I_{Diff}L1[Amps] = \frac{S_{r1}}{S_{\max}} \times \frac{U_{rSide}}{U_{r1}} \times \frac{I_{L1}}{\sqrt{3}}$$

To obtain pickup the following should be true:

$$I_{Diff}L1[Amps] = I_{d\min}[Amps]$$

Therefore:

$$I_{d\min}[pu] \times I_{r1} = \frac{S_{r1}}{S_{\max}} \times \frac{U_{rSide}}{U_{r1}} \times \frac{I_{L1}}{\sqrt{3}}$$ now we can calculate the following:

$$I_{L1} = \sqrt{3} \times \frac{U_{r1} \times I_{r1}}{S_{r1}} \times \frac{S_{\max}}{U_{rSide}} \times I_{d\min}[pu]$$ Current I_{L1} in primary Amps.

If the data for primary winding are set in the usual way for three-phase system (i.e. $S_{r1} = \sqrt{3} \times U_{r1} \times I_{r1}$) then the following formula can be derived:

$$I_{L1} = \frac{S_{\max}}{U_{rSide}} \times I_{d\min}[pu]$$ (Current I_{L1} in primary Amps)

Finally, if the data for winding in which injection is performed are set in the usual way for three-phase system (i.e. $S_{rSide} = \sqrt{3} \times U_{rSide} \times I_{rSide}$) than the following simplified formula can be used:

$$I_{L1} = \sqrt{3} \times \frac{S_{\max}}{S_{rSide}} \times I_{rSide} \times I_{d\min}[pu]$$ (Current I_{L1} in primary Amps)

$I_{L1\_Test\_Set}$ = I_{L1} x ($SideCT_{rSec}$ / $SideCT_{rPri}$) This defines the pickup in secondary Amps

It should be noted that for this case another one differential current will have the same value, while the third differential current will be equal to zero. (i.e. DIFP will have START signal set to one for phase L1 and for another one phase, depending on the transformer phase shift)

6. Detailed Calculation for Phase to Phase Fault

Calculation will be done only for L1-L2 fault. Similar calculations can be performed for other phase combinations. For this type of fault the following hold true:

$\vec{I}_{L1} = I_{L1}$; $\vec{I}_{L2} = -I_{L1}$ and I_{L3}=0 therefore $\vec{I}_{Zero\_Sequence} = 0$

Ibias [pu] = (S_{rSide}/S_{max}) * [I_{L1}/ I_{rSide}]

Ibias [Amps] = Ibias [pu] x I_{r1}

6.1 Idiff calculation for winding where $\vec{I}_y = \frac{\vec{I}_{L1} + \vec{I}_{L2} + \vec{I}_{L3}}{3} = \vec{I}_{Zero\_Sequence} = 0$ or $\vec{I}_y = 0$ (i.e. k=1)

$$I_{Diff} L1[Amps] = \frac{S_{r1}}{S_{\max}} \times \frac{U_{rSide}}{U_{r1}} \times I_{L1}$$

To obtain pickup the following should be true:

$$I_{Diff} L1[Amps] = I_{d\min}[Amps]$$

Therefore:

$I_{d\min}[pu] \times I_{r1} = \frac{S_{r1}}{S_{\max}} \times \frac{U_{rSide}}{U_{r1}} \times I_{L1}$ now we can calculate the following:

$$I_{L1} = \frac{U_{r1} \times I_{r1}}{S_{r1}} \times \frac{S_{\max}}{U_{rSide}} \times I_{d\min}[pu]$$ Current I_{L1} in primary Amps.

If the data for primary winding are set in the usual way for three-phase system (i.e. $S_{r1} = \sqrt{3} \times U_{r1} \times I_{r1}$) than the following formula can be derived:

$$I_{L1} = \frac{1}{\sqrt{3}} \times \frac{S_{\max}}{U_{rSide}} \times I_{d\min}[pu]$$ (Current I_{L1} in primary Amps)

Finally, if the data for winding in which injection is performed are set in the usual way for three-phase system (i.e. $S_{rSide} = \sqrt{3} \times U_{rSide} \times I_{rSide}$) than the following simplified formula can be used:

$$I_{L1} = \frac{S_{\max}}{S_{rSide}} \times I_{rSide} \times I_{d\min}[pu]$$ (Current I_{L1} in primary Amps)

$I_{L1\_Test\_Set}$ = I_{L1} x ($SideCT_{rSec}$ / $SideCT_{rPri}$) This defines the pickup in secondary Amps

It should be noted that for this case phase L2 differential current will have the same value, while the phase L3 differential current will be equal to zero. (i.e. DIFP will have START signal set to one for phase L1 and phase L2).

6.2 Idiff calculation for winding where $\vec{I}_y = \vec{I}_{L2}$ or $\vec{I}_y = \vec{I}_{L3}$ (i.e. $k = \sqrt{3}$)

$$I_{Diff}L1[Amps] = \frac{2}{\sqrt{3}} \times \frac{S_{r1}}{S_{\max}} \times \frac{U_{rSide}}{U_{r1}} \times I_{L1}$$

To obtain pickup the following should be true:

$$I_{Diff}L1[Amps] = I_{d\min}[Amps]$$

Therefore:

$$I_{d\min}[pu] \times I_{r1} = \frac{2}{\sqrt{3}} \times \frac{S_{r1}}{S_{\max}} \times \frac{U_{rSide}}{U_{r1}} \times I_{L1}$$ now we can calculate the following:

$$I_{L1} = \frac{\sqrt{3}}{2} \times \frac{U_{r1} \times I_{r1}}{S_{r1}} \times \frac{S_{\max}}{U_{rSide}} \times I_{d\min}[pu]$$ Current I_{L1} in primary Amps.

If the data for primary winding are set in the usual way for three-phase system (i.e. $S_{r1} = \sqrt{3} \times U_{r1} \times I_{r1}$) than the following formula can be derived:

$$I_{L1} = \frac{1}{2} \times \frac{S_{\max}}{U_{rSide}} \times I_{d\min}[pu]$$ (Current I_{L1} in primary Amps)

Finally, if the data for winding in which injection is performed are set in the usual way for three-phase system (i.e. $S_{rSide} = \sqrt{3} \times U_{rSide} \times I_{rSide}$) than the following simplified formula can be used:

$$I_{L1} = \frac{\sqrt{3}}{2} \times \frac{S_{\max}}{S_{rSide}} \times I_{rSide} \times I_{d\min}[pu]$$ (Current I_{L1} in primary Amps)

$I_{L1\_Test\_Set}$ = I_{L1} x ($SideCT_{rSec}$ / $SideCT_{rPri}$) This defines the pickup in secondary Amps

It should be noted that for this case the following would hold true:

$I_{Diff}L2 = I_{Diff}L3 = \frac{I_{Diff}L1}{2}$ (i.e. DIFP will have START signal set to one for phase L1 only)

7. Detailed Calculation for Three-Phase Fault

For this type of fault operator a have to be defined as $a = e^{j\frac{2\pi}{3}}$.
For this type of fault the following hold true:

$\vec{I}_{L1} = I_{L1}$; $\vec{I}_{L2} = a^2 I_{L1}$ and $\vec{I}_{L3} = aI_{L1}$ therefore $\vec{I}_{Zero\_Sequence} = 0$

Ibias [pu] = (S_{rSide}/S_{max}) * [I_{L1}/ I_{rSide}]
Ibias [Amps] = Ibias [pu] x I_{r2}

7.1 Idiff calculation for winding where $\vec{I}_y = \frac{\vec{I}_{L1} + \vec{I}_{L2} + \vec{I}_{L3}}{3} = \vec{I}_{Zero\_Sequence} = 0$ or $\vec{I}_y = 0$ (i.e. k=1)

$$I_{Diff}L1[Amps] = \frac{S_{r1}}{S_{\max}} \times \frac{U_{rSide}}{U_{r1}} \times I_{L1}$$

To obtain pickup the following should be true:

$$I_{Diff}L1[Amps] = I_{d\min}[Amps]$$

Therefore:

$I_{d\min}[pu] \times I_{r1} = \frac{S_{r1}}{S_{\max}} \times \frac{U_{rSide}}{U_{r1}} \times I_{L1}$ now we can calculate the following:

$I_{L1} = \frac{U_{r1} \times I_{r1}}{S_{r1}} \times \frac{S_{\max}}{U_{rSide}} \times I_{d\min}[pu]$ Current I_{L1} in primary Amps.

If the data for primary winding are set in the usual way for three-phase system (i.e. $S_{r1} = \sqrt{3} \times U_{r1} \times I_{r1}$) than the following formula can be derived:

$I_{L1} = \frac{1}{\sqrt{3}} \times \frac{S_{\max}}{U_{rSide}} \times I_{d\min}[pu]$ (Current I_{L1} in primary Amps)

Finally, if the data for winding in which injection is performed are set in the usual way for three-phase system (i.e. $S_{rSide} = \sqrt{3} \times U_{rSide} \times I_{rSide}$) than the following simplified formula can be used:

$I_{L1} = \frac{S_{\max}}{S_{rSide}} \times I_{rSide} \times I_{d\min}[pu]$ (Current I_{L1} in primary Amps)

$I_{L1\_Test\_Set}$ = I_{L1} x ($SideCT_{rSec}$ / $SideCT_{rPri}$) This defines the pickup in secondary Amps

It should be noted that for this case the following would hold true:

$I_{Diff}L2 = I_{Diff}L3 = I_{Diff}L1$ (i.e. DIFP will have START signal set to one for all three phases)

7.2 Idiff calculation for winding where $\vec{I}_y = \vec{I}_{L2}$ or $\vec{I}_y = \vec{I}_{L3}$ (i.e. $k = \sqrt{3}$)

$$I_{Diff}L1[Amps] = \frac{S_{r1}}{S_{\max}} \times \frac{U_{rSide}}{U_{r1}} \times I_{L1}$$

To obtain pickup the following should be true:

$$I_{Diff}L1[Amps] = I_{d\min}[Amps]$$

Therefore:

$$I_{d\min}[pu] \times I_{r1} = \frac{S_{r1}}{S_{\max}} \times \frac{U_{rSide}}{U_{r1}} \times I_{L1}$$ now we can calculate the following:

$$I_{L1} = \frac{U_{r1} \times I_{r1}}{S_{r1}} \times \frac{S_{\max}}{U_{rSide}} \times I_{d\min}[pu]$$ Current I_{L1} in primary Amps.

If the data for primary winding are set in the usual way for three-phase system (i.e. $S_{r1} = \sqrt{3} \times U_{r1} \times I_{r1}$) than the following formula can be derived:

$$I_{L1} = \frac{1}{\sqrt{3}} \times \frac{S_{\max}}{U_{rSide}} \times I_{d\min}[pu]$$ (Current I_{L1} in primary Amps)

Finally, if the data for winding in which injection is performed are set in the usual way for three-phase system (i.e. $S_{rSide} = \sqrt{3} \times U_{rSide} \times I_{rSide}$) than the following simplified formula can be used:

$$I_{L1} = \frac{S_{\max}}{S_{rSide}} \times I_{rSide} \times I_{d\min}[pu]$$ (Current I_{L1} in primary Amps)

$I_{L1\_Test\_Set}$ = I_{L1} x ($SideCT_{rSec}$ / $SideCT_{rPri}$) This defines the pickup in secondary Amps

It should be noted that for this case the following would hold true:

$I_{Diff}L2 = I_{Diff}L3 = I_{Diff}L1$ (i.e. DIFP will have START signal set to one for all three phases)

8. Conclusion

From the previous formulas it can be seen that for three winding transformer, all pickup currents are proportional to one constant current level defined as per the following equation:

$$Const\_I = \frac{S_{\max}}{S_{rSide}} \times I_{rSide} \times I_{d\min}[pu]$$

For two winding transformers the same formula can be used, but ratio $\frac{S_{\max}}{S_{rSide}}$ will be always equal to one.

Now it is possible to summarize all pickup currents for DIFP injection from one side as per the following table:

Type of Fault	Side with I_y=$I_{Zero\_Sequence}$ (ZSCSub=On)	Side with I_y=0 (ZSCSub=Off)	Side with I_y=I_{L2} (ZSCSub=On or Off)
Phase to Ground	1,5 x Const_I	1,0 x Const_I	1,732 x Const_I
Phase to Phase	1,0 x Const_I	1,0 x Const_I	0,866 x Const_I
Three Phase	1,0 x Const_I	1,0 x Const_I	1,0 x Const_I