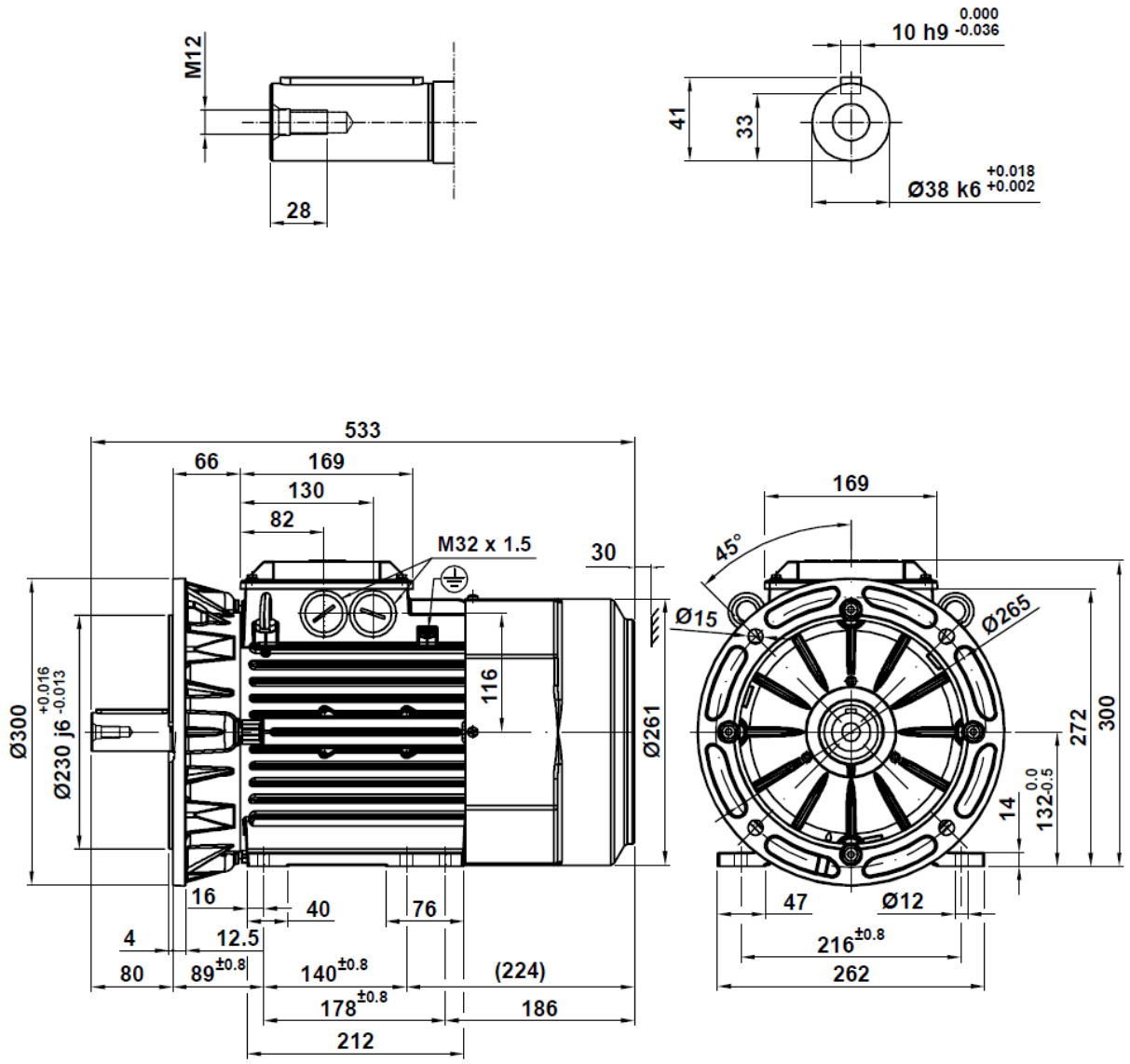

Additional information:

Dimension Print	Motor Type: M3BP (B) 132_2-8 B35, V15, V35 M3GP (B) 132_2-8 B35, V35	Document No: 3GZF500613-14 B 13 GP 132 A
Description: STANDARD SQUIRREL CAGE MOTOR		

Unit:	ABB Oy, Motors and Generators	Issued by:	S.Tikkanen	Replaces:
Date:	31.08.2016	Approved by:	C.Vägar	Replaced by:

ABB Oy	Customer Reference:	ABB