Cable terminal instruction
Wall mounted socket with RCD
Type RPR
16A, 32A

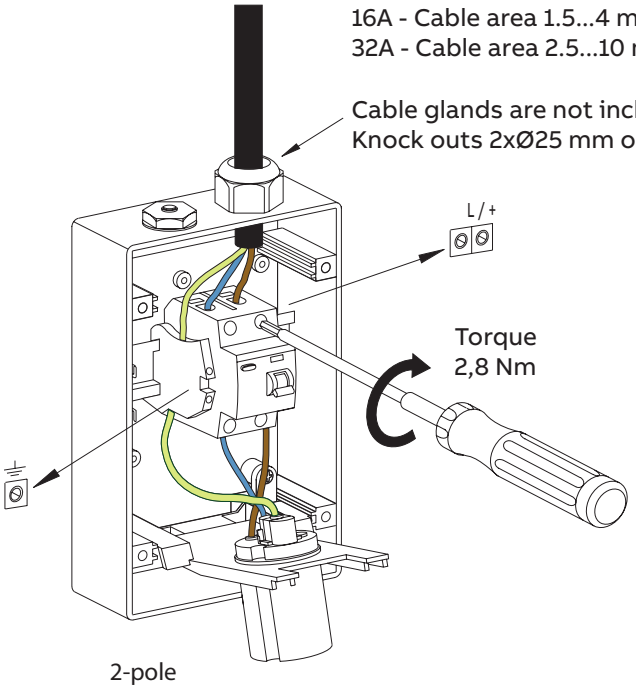

2-pole

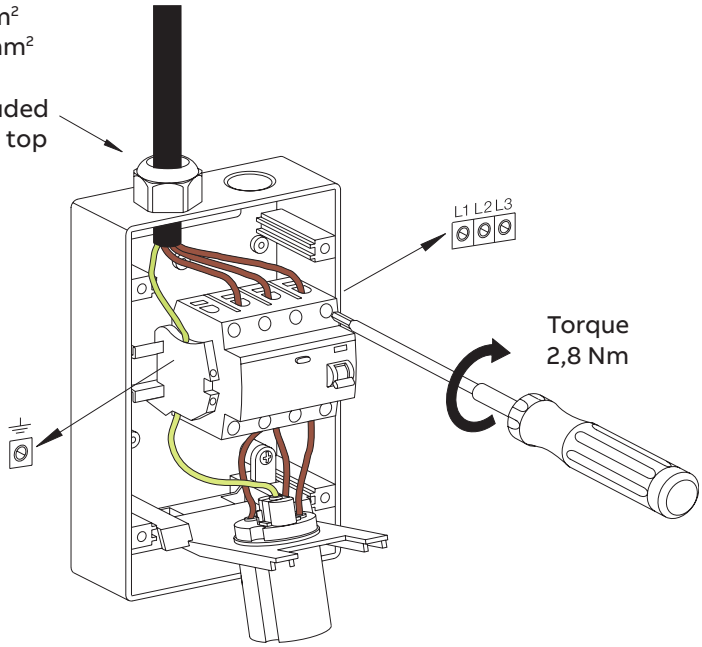

3-pole

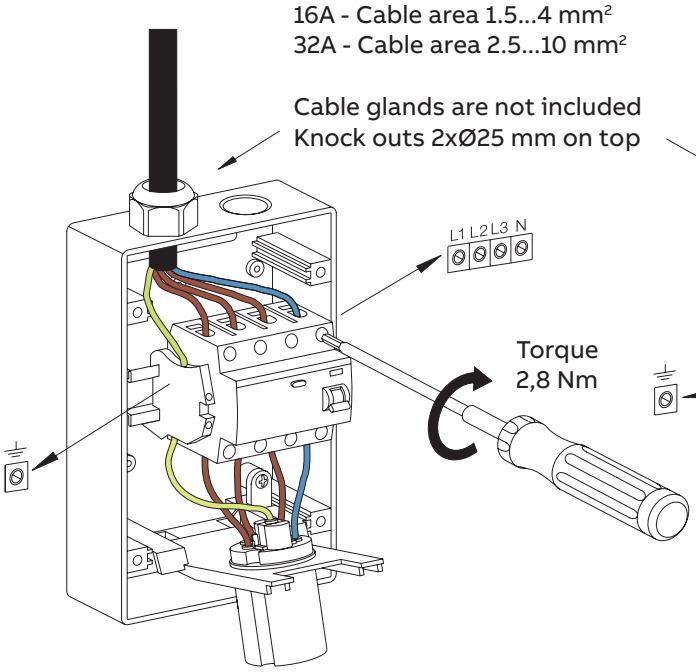

4-pole 6h

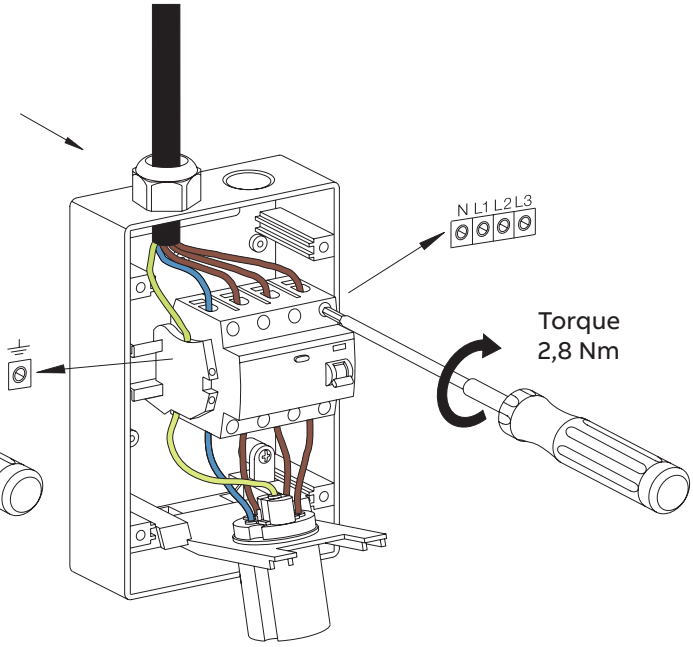

4-pole 9h

ABB s.r.o.
Elektro-Praga
Resslova 3
CZ - 466 02 Jablonec nad Nisou
Contact center: +420 597 468 940
Technical support:
Tel: + 420 800 800 104
E-mail: contact.center@cz.abb.com
www.abb.com/industrialplugs

2CMC000039M0002, Rev. B / July 2020