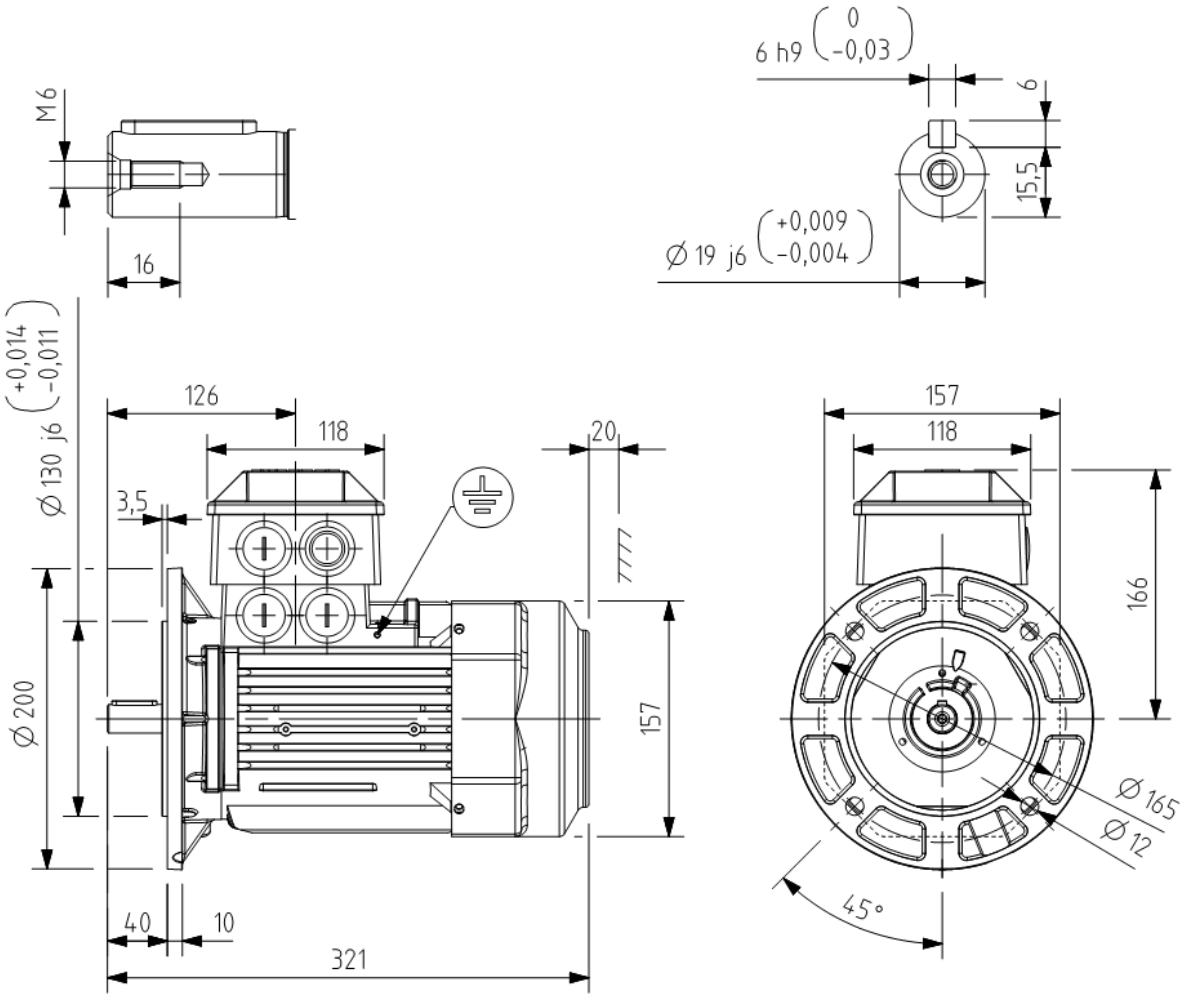

Additional information:

Dimension Print	Motor Type: M3BP/GP 80M 2-8 B5, V1, V3, FF165	Document No: 3GZF500008-63 B 14 BP 80 A
Description: IE3 SQUIRREL CAGE MOTOR WITH SHORT FRAME AND 4x90° TURNABLE TERMINAL BOX		

Unit:	Motors and Generators	Issued by:	R.Kalliokoski	Replaces:
Date:	21.08.2015	Approved by:	B.Lillsjö	Replaced by:

ABB Oy	Customer Reference:	ABB