ROBOTICS

Application manual

Conveyor tracking

Trace back information:
Workspace 25B version a5
Checked in 2025-06-30
Skribenta version 5.6.019

Application manual
Conveyor tracking

RobotWare 6.16

Document ID: 3HAC050991-001
Revision: W

© Copyright 2004-2025 ABB. All rights reserved.
Specifications subject to change without notice.

The information in this manual is subject to change without notice and should not be construed as a commitment by ABB. ABB assumes no responsibility for any errors that may appear in this manual.

Except as may be expressly stated anywhere in this manual, nothing herein shall be construed as any kind of guarantee or warranty by ABB for losses, damage to persons or property, fitness for a specific purpose or the like.

In no event shall ABB be liable for incidental or consequential damages arising from use of this manual and products described herein.

This manual and parts thereof must not be reproduced or copied without ABB's written permission.

Keep for future reference.

Additional copies of this manual may be obtained from ABB.

Original instructions.

© Copyright 2004-2025 ABB. All rights reserved.
Specifications subject to change without notice.

Table of contents

Overview of this manual ... 9
Network security ... 12
Open source and 3rd party components ... 13

1 Introduction to conveyor tracking 15

1.1 Physical components ... 15
1.2 Features ... 17
1.3 Limitations ... 19
1.4 Principles of conveyor tracking ... 20

2 Conveyor tracking modules 25

2.1 Network based conveyor tracking module CTM (DSQC2000) ... 25
2.2 DeviceNet based conveyor tracking unit DSQC377B ... 38

3 Installation 39

3.1 Hardware connections ... 39
3.2 Installing the encoder for conveyor tracking ... 40
3.2.1 Encoder location ... 41
3.2.2 Encoder cables ... 42
3.3 Connecting the encoder to the CTM ... 43
3.4 Connecting the encoder to the DSQC377B ... 47
3.5 Connecting a camera to the CTM ... 50
3.6 Connecting the sync switches to the CTM ... 51

4 Conveyor Tracking tab in RobotStudio 53

5 Configuration and calibration 61

5.1 About software installation and configuration ... 61
5.2 Configuring conveyor tracking module (DSQC2000) ... 62
5.3 Verifying the installation of encoders and sensors (DSQC2000) ... 65
5.4 Configuration of robot controllers (DSQC2000) ... 67
5.5 Direction of positive motion from the encoder (DSQC377 only) ... 70
5.6 Calibrating CountsPerMeter (DSQC377) ... 71
5.7 Calibrating CountsPerMeter (DSQC2000) ... 72
5.8 Calibrating the conveyor base frame ... 73
5.9 Defining conveyor start window and sync separation ... 77
5.10 Avoiding robot reach problems ... 78
5.11 Using a trigger output on the CTM ... 79
5.12 Defining the robot adjustment speed ... 80
5.13 Additional adjustments ... 81
5.14 Configuring a track motion to follow a conveyor ... 82
5.15 Installing conveyor tracking software ... 84
5.16 Installing additional conveyors work areas for conveyor tracking ... 85

6 Programming 87

6.1 Programming conveyor tracking ... 87
6.2 Working with the object queue ... 88
6.3 Activating the conveyor ... 89
6.4 Defining a conveyor coordinated work object ... 90
6.5 Waiting for a work object ... 91
6.6 Programming the conveyor coordinated motion ... 92
6.7 Dropping a work object ... 93
6.8 Entering and exiting conveyor tracking motion in corner zones ... 94
6.9 Information on FlexPendant ... 95
6.10 Programming considerations ... 96

© Copyright 2004-2025 ABB. All rights reserved.

6.11 Finepoint programming 97
6.12 Operating modes 98

7 System parameters 99

7.1 Introduction 99
7.2 Topic I/O 100
7.3 Topic Process 101
7.4 Topic Motion 104

8 RAPID reference 107

8.1 Instructions 107
8.1.1 WaitWObj - Wait for work object on conveyor 107
8.1.2 DropWObj - Drop work object on conveyor 110
8.1.3 CnvPredictReach - High speed conveyors 111

9 Advanced queue tracking 117

9.1 Introduction to advanced queue tracking 117
9.2 Working with the object queue 120

10 Circular conveyor tracking 123

10.1 Introduction to circular conveyor tracking 123
10.2 Encoder type selection and location 125
10.3 Installation and configuration 126
10.4 Additional motion settings 127
10.5 Calibrating the conveyor base frame 128
10.6 Manually calibrating the conveyor base frame 129
10.7 TCP measurement method 130

11 Accelerating conveyors 133

11.1 Introduction to accelerating conveyors 133
11.2 System parameters 134
11.3 Predicting speed changes 136
11.4 UseAccProfile - Use acceleration profile 137

12 Indexing conveyors 141

12.1 Description of indexing conveyor options 141
12.2 Tracking indexing conveyors 142
12.2.1 Setting up tracking for an indexing conveyor 142
12.2.2 System parameters 143
12.2.3 Using indexing conveyor tracking from RAPID 144
12.2.4 RecordProfile 145
12.2.5 WaitAndRecProf 146
12.2.6 StoreProfile 148
12.2.7 LoadProfile 149
12.2.8 ActivateProfile 150
12.2.9 DeactProfile 151
12.2.10 CnvGenInstr 152
12.3 Indexing conveyor with servo control (Indexing Conveyor Control) 155
12.3.1 Introduction to indexing conveyors with servo control 155
12.3.2 Setting up a servo controlled indexing conveyor 157
12.3.3 System parameters and configuration files 158
12.3.4 Testing the indexing conveyor setup 163
12.3.5 Calibrating the base frame 164
12.3.6 indcnvdata 165
12.3.7 IndCnvInit 166
12.3.8 IndCnvEnable and IndCnvDisable 167
12.3.9 IndCnvReset 168

© Copyright 2004-2025 ABB. All rights reserved.

12.3.10 IndCnvAddObject 169
12.3.11 RAPID programming example 170
12.3.12 Minimizing trigger time 173

13 Conveyor tracking and MultiMove 175

13.1 About conveyor tracking and MultiMove 175
13.2 Configuration example for UnsyncCnv 177
13.3 Configuration example for SyncCnv 179
13.4 Tasks and programming techniques 181
13.5 Independent movements, example UnsyncCnv 183
13.6 Coordinated synchronized movements, example SyncCnv 185
13.7 Motion principles 188
13.8 Combining synchronized and un-synchronized mode 189

14 Troubleshooting 191

14.1 Overview 191
14.2 Event messages 192
14.3 System parameters 195
14.4 Robot path characteristics 196
14.5 Power failure 198
14.6 Collision detection 199
14.7 Technical support 200

Index 201

© Copyright 2004-2025 ABB. All rights reserved.

This page is intentionally left blank

Overview of this manual

About this manual

This manual describes the options *Conveyor Tracking*, *Indexing Conveyor Control*, and *Tracking Unit Interface* for IRC5. Conveyor tracking, or line tracking, is when the robot follows a work object mounted on a moving conveyor.

The option *Indexing Conveyor Control* is used when the servo for an indexing conveyor is controlled by the robot controller.

The Tracking Unit Interface is used to establish communication with a remote Conveyor Tracking Module.

Usages

The manual describes how the options are installed, programmed, and operated.

Note

It is the responsibility of the integrator to conduct a risk assessment of the final application.

It is the responsibility of the integrator to provide safety and user guides for the robot system.

References

The manual contains references to the following information products:

References	Document ID
Product manual - IRC5 IRC5 with main computer DSQC 639.	*3HAC021313-001*
Product manual - IRC5 IRC5 with main computer DSQC1000 or later.	*3HAC047136-001*
Product Manual - IRC5P	*3HNA008861-001*
Installation manual - IRC5P	
Operating manual - IRC5 with FlexPendant	*3HAC050941-001*
Operator's Manual - IRC5P	*3HNA008861-001*
Operating manual - RobotStudio	*3HAC032104-001*
Technical reference manual - System parameters	*3HAC050948-001*
Technical reference manual - RAPID Instructions, Functions and Data types	*3HAC050917-001*
Technical reference manual - RAPID Overview	*3HAC050947-001*
Application manual - Additional axes and standalone controller	*3HAC051016-001*
Application manual - Controller software IRC5	*3HAC050798-001*
Application manual - MultiMove	*3HAC050961-001*
Application manual - DeviceNet Master/Slave	*3HAC050992-001*
Operating manual - IRC5 Integrator's guide	*3HAC050940-001*
Application manual - PickMaster 3	*3HAC031978-001*

Continues on next page

© Copyright 2004-2025 ABB. All rights reserved.

Revisions

The following revisions of this manual have been released.

Revision	Description
-	Released with RobotWare 6.0.
A	Released with RobotWare 6.01. • Updated information about adding conveyor tracking to an existing robot system, see *Installing conveyor tracking software on page 84*.
B	Released with RobotWare 6.03. Added information about the system parameter *Supervise max_dist Off* in section *Avoiding robot reach problems on page 78*.
C	Released with RobotWare 6.04. • Updated the counter values from 16-bit signals to 32-bit signals, see *System parameters on page 117*. • Minor corrections.
D	Released with RobotWare 6.05. • Minor corrections.
E	Released with RobotWare 6.06. • Added the chapter *Troubleshooting on page 191*
F	Released with RobotWare 6.07. • Updates and added the *CnvPredictReach - High speed conveyors on page 111* chapter.
G	Released with RobotWare 6.08. • Minor corrections. • Added Buttons section and minor changes to the LED indicators section, in chapter *Conveyor tracking modules on page 25* and added *Identifying a CTM in RobotStudio on page 54*. • Minor corrections in *Introduction to conveyor tracking on page 15*, Features section. • Updated recommendations in *Encoder cables on page 42*.
H	Released with RobotWare 6.09. • The instruction `WaitWObj` and the section *Working with the object queue on page 120* have been updated with information regarding `ERR_CNV_OBJ_LOST`. • The parameter *Corvec correction level* should not be set to 2 or 3 for YuMi robots, see *Type Robot on page 104*.
J	Released with RobotWare 6.10. • Correction regarding what files to load for DSQC2000, see *Installing additional conveyors work areas for conveyor tracking on page 85*.
K	Released with RobotWare 6.10.01. "Cyber security" replaced by "Cybersecurity" in entire manual.
L	Released with RobotWare 6.10.02. • Minor improvements in several sections.
M	Released with RobotWare 6.11. • New parameter Reach zone accuracy added in section *Topic Process on page 101*. • Removed obsolete RAPID objects. `UseReachableTargets, GetMaxUsageTime, ResetMaxUsageTime`

Continues on next page

© Copyright 2004-2025 ABB. All rights reserved.

Revision	Description
N	Released with RobotWare 6.12. • New event message 50024: Corner path failure added in section *Event messages on page 192*. • Updated the section *CnvPredictReach - High speed conveyors on page 111*. • Note added in section *Working with the object queue on page 120* saying that for CTM, the ERR_CNV_OBJ_LOST error is not supported. • Minor corrections.
P	Released with RobotWare 6.13. • Information regarding the adjustment speed parameter updated in *About software installation and configuration on page 61*, *Configuring conveyor tracking module (DSQC2000) on page 62*, *Defining the robot adjustment speed on page 80*, *Topic Process on page 101*, *Event messages on page 192*, *System parameters on page 195* and *Robot path characteristics on page 196*. • Updated the secription about DSQC377B in the section *DeviceNet based conveyor tracking unit DSQC377B on page 38*.
Q	Released with RobotWare 6.13.02. • Added clarification about sharing of encoders between different work areas, see *Configuring conveyor tracking module (DSQC2000) on page 62* and *Configuration of robot controllers (DSQC2000) on page 67*.
R	Released with RobotWare 6.13.03. • Updated descriptions for DSQC2000 regarding advanced queue tracking. • Updated limitation for indexing conveyors, see *Introduction to indexing conveyors with servo control on page 155*.
S	Released with RobotWare 6.14. • Updated information about sync inputs and speed filter settings for DSQC2000. • Added type *Conveyor Internal* to section *Topic Process on page 101*.
T	Released with RobotWare 6.15. • Information about firewall settings added in sections *Configuring conveyor tracking module (DSQC2000) on page 62* and *Configuration of robot controllers (DSQC2000) on page 67*. • Updated information about discovery LED in section *Network based conveyor tracking module CTM (DSQC2000) on page 25*.
U	Released with RobotWare 6.15.03. • Removed the information about the parameter *Use spline parameters* as this is obsolete.
V	Released with RobotWare 6.16. • Minor corrections.
W	Released with RobotWare 6.16. • Updated the section *Introduction to indexing conveyors with servo control on page 155*.

© Copyright 2004-2025 ABB. All rights reserved.

Network security

Network security

This product is designed to be connected to and to communicate information and data via a network interface. It is your sole responsibility to provide, and continuously ensure, a secure connection between the product and to your network or any other network (as the case may be).

You shall establish and maintain any appropriate measures (such as, but not limited to, the installation of firewalls, application of authentication measures, encryption of data, installation of anti-virus programs, etc) to protect the product, the network, its system and the interface against any kind of security breaches, unauthorized access, interference, intrusion, leakage and/or theft of data or information. ABB Ltd and its entities are not liable for damage and/or loss related to such security breaches, any unauthorized access, interference, intrusion, leakage and/or theft of data or information.

© Copyright 2004-2025 ABB. All rights reserved.

Open source and 3rd party components

Open source and 3rd party components

ABB products use software provided by third parties, including open source software. The following copyright statements and licenses apply to various components that are distributed inside the ABB software. Each ABB product does not necessarily use all of the listed third party software components. Licensee must fully agree and comply with these license terms or the user is not entitled to use the product. Start using the ABB software means accepting also referred license terms. The third party license terms apply only to the respective software to which the license pertains, and the third party license terms do not apply to ABB products. With regard to programs provided under the GNU general public license and the GNU lesser general public license licensor will provide licensee on demand, a machine-readable copy of the corresponding source code. This offer is valid for a period of three years after delivery of the product.

ABB software is licensed under the ABB end user license agreement, which is provided separately.

RobotWare

For RobotWare, there is license information in the folder **licenses** in the RobotWare distribution package.

OpenSSL

This product includes software developed by the OpenSSL Project for use in the OpenSSL Toolkit. (http://www.openssl.org/)

This product includes cryptographic software written by Eric Young (eay@cryptsoft.com).

This product includes software written by Tim Hudson (tjh@cryptsoft.com).

CTM

For OleOS, the Linux based operating system used on the conveyor tracking module (CTM), a list of copyright statements and licenses is available in the file /**etc**/**licenses.txt** located on the CTM board and accessible via the console port or by downloading the file over SFTP.

For the CTM application, a list of copyright statements and licenses is available in the file /**opt**/**ABB.com**/**ctm**/**licenses.txt** located on the CTM board and accessible via the console port or by downloading the file over SFTP.

© Copyright 2004-2025 ABB. All rights reserved.

This page is intentionally left blank

1 Introduction to conveyor tracking

1.1 Physical components

Option Conveyor Tracking

A typical installation when using the option *Conveyor Tracking* includes the following components:

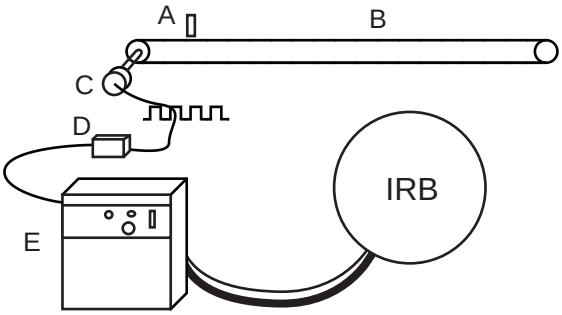

xx1200001074

A	Synchronization switch
B	Conveyor
C	Encoder, 24 V
D	Encoder interface
E	Robot controller
IRB	Robot

The encoder and synchronization switch are connected to the encoder interface.

Option Indexing Conveyor Control

A typical installation when using the option *Indexing Conveyor Control* includes the following components:

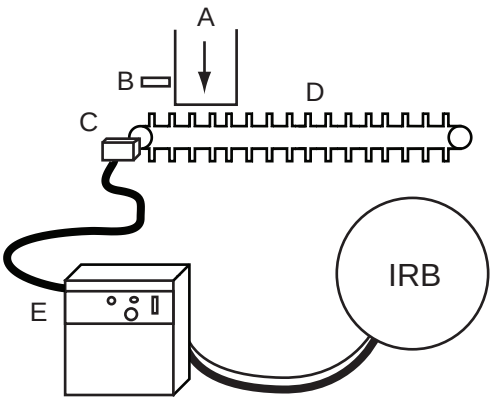

xx1200001075

A	Infeeder
B	Sensor
C	Motor unit

Continues on next page

© Copyright 2004-2025 ABB. All rights reserved.

D	Indexed conveyor
E	Robot controller
IRB	IRB robot

An extra drive unit and SMB needs to be installed, see *Application manual - Additional axes and standalone controller*.

© Copyright 2004-2025 ABB. All rights reserved.

1.2 Features

Accuracy

In automatic mode, at 150 mm/s constant conveyor speed, the tool center point (TCP) of the robot will stay within +/- 2 mm of the path. This distance is maintained whether the conveyor is in motion or not. This is valid as long as the robot is within its dynamic limits with the added conveyor motion. This figure depends on the calibration of the robot and conveyor and is applicable for linear conveyor tracking only.

Object queue

For the option *Conveyor Tracking*, a queue is maintained of up to 254 objects that have passed the synchronization switch. For the option *Indexing Conveyor Control*, the queue can contain up to 100 objects.

Start window

A program can choose to wait for an object that is within a window past the normal starting point, or wait for an object to pass a specific distance, or immediately take the first object in the object tracking queue. Objects that go beyond the start window are automatically skipped.

RAPID access to queue and conveyor data

A RAPID program has access to the number of objects in the object queue, and the current position and speed of the conveyor. A RAPID program can also remove the first object in the tracking queue or all objects in the queue.

Maximum distance

A maximum tracking distance can be specified to stop the robot from tracking outside of the working or safety area.

Track follows conveyor

If the robot is mounted on a linear track, then the system can be configured so that the track will follow the conveyor and maintain the relative position to the conveyor. The TCP speed relative the work object on the conveyor will still be the programmed speed.

Enter and exit conveyor tracking in corner zones

It is possible to enter and exit conveyor tracking via corner zones as well as via fine points. Use corner zones to achieve a minimum cycle time.

Exit and re-enter conveyor tracking to same object

It is possible to exit and re-enter to the same object on the conveyor unlimited times until the object moves outside the working area, reaches the maximum distance, or is explicitly dropped by the RAPID program.

Continues on next page

© Copyright 2004-2025 ABB. All rights reserved.

Multiple conveyors

Up to six conveyors are supported with the option *Conveyor Tracking*. Each encoder must be connected to an encoder interface.

Up to two indexed conveyors can be used with the option *Indexing Conveyor Control*.

Coordinated finepoint

A finepoint can be programmed while moving relative to the conveyor. This conveyor coordinated finepoint will ensure that the robot stops moving relative to the conveyor and will follow the conveyor while the RAPID program continues execution. The robot will hold the position within +/- 0.7 mm depending on calibration of the robot and conveyor.

Calibration of linear conveyors

A calibration method is provided for easy calibration of the position and direction of the conveyor motion in the robot work space. The linear conveyor may take any position and orientation.

© Copyright 2004-2025 ABB. All rights reserved.

1.3 Limitations

Small orientation error with SingArea\Wrist

There can be a small orientation error of the TCP while following the conveyor and make long motions with `SingArea\Wrist`. This error can be eliminated by using several short movements with `SingArea\Wrist`.

Robot mounted on track

If the robot is mounted on a track and the track is to be used to follow the conveyor motions, then the track and conveyor must be parallel.

The motion on the track and the motion on the conveyor must have the same direction of positive motion. See *Configuring a track motion to follow a conveyor on page 82*.

Calibrating circular conveyors

There are no built-in methods for calibrating circular conveyors. This can be evaded by calculating a quaternion orientation manually or with other tools during base frame calibration.

Additional axes

For the option *Conveyor Tracking*, each conveyor is considered an additional axis. Thus the system limitation of 6 active additional axes must be reduced by the number of active and installed conveyors.

The first installed conveyor will use measurement node 6 and the second conveyor will use measurement node 5. These measurement nodes are not available for additional axes and no resolvers should be connected to these nodes on any additional axes measurement boards.

For the option *Indexing Conveyor Control*, each conveyor is considered as two additional axes.

Object queue lost on restart or power failure

If the system is restarted or if the power supply fails, then the object queue will be lost.

Minimum and maximum speed

The minimum conveyor speed to maintain smooth and accurate motions depends on the encoder selection. It can vary from 4 mm/s to 8 mm/s. See *Minimum and maximum counts per second on page 40*.

There is no explicit maximum speed for the conveyor. Accuracy will degrade at speeds above the specification and with high speed robot motions or with very high conveyor speeds (> 500 mm/s) and the robot will no longer be able to follow the conveyor.

WaitWObj after DropWObj

If a `WaitWObj` instruction is used immediately after a `DropWObj` instruction, it may be necessary to add a `WaitTime 0.1;` after the `DropWObj` instruction.

© Copyright 2004-2025 ABB. All rights reserved.

1.4 Principles of conveyor tracking

Description

In conveyor tracking, the robot Tool Center Point (TCP) will automatically follow a work object that is defined on the moving conveyor. While tracking the conveyor the robot controller will maintain the programmed TCP speed relative to the work object even if the conveyor runs at different speeds.

The options *Conveyor Tracking* and *Indexing Conveyor Control* are built on the coordinated work object, as with coordinated motion with additional axes. See *Application manual - Additional axes and standalone controller*.

Conveyor as a mechanical unit

In the option *Conveyor Tracking*, the conveyor is treated as a mechanical unit. It has all features of a mechanical unit except that it is not controlled by the robot controller. In the option *Indexing Conveyor Control*, the conveyor is treated as a mechanical unit and controlled by the robot controller.

As a mechanical unit, the conveyor can be activated and deactivated. The position of the conveyor is shown on the FlexPendant, and in the robtarget when a position is modified (ModPos).

Conveyor coordinated work object

The robot movements are coordinated to the movements of a user frame connected to the conveyor mechanical unit. For example a user frame is placed on the conveyor and connected to its movements.

A movable work object is used with the name of the conveyor mechanical unit. The conveyor tracking coordination will be active if the mechanical unit is active and the conveyor coordinated work object is active. When the conveyor coordinated work object is used, in jogging or in a move instruction, the data in the uframe component will be ignored and the location of the user coordinate system will only depend on the movements of the conveyor mechanical unit. However the oframe component will still work giving an object frame related to the user frame and also the displacement frame can be used.

Waiting for a work object on the conveyor

The difference between a conveyor coordinated work object and a work object that is coordinated to another type of mechanical unit is that there is no work object for coordination until an object appears on the conveyor. There must be a work object present on the conveyor before the robot can coordinate the TCP positions to the conveyor.

For the option *Conveyor Tracking*, work objects on the conveyor are detected by the synchronization switch that is connected to the encoder interface. The unit tracks all objects that have past the synchronization switch and are within specified distances in the work area.

For the option *Indexing Conveyor Control*, the work object is created when the defined number of objects (that is, number of indexes) have passed. Before starting coordinated motion with the conveyor, the RAPID program must first check if there

Continues on next page

© Copyright 2004-2025 ABB. All rights reserved.

is a work object available on the conveyor. If an object is available then execution continues and the motions can use the coordinated work object. If there is no object, then the RAPID program waits until a work object is available.

Connecting to a work object

The RAPID instruction `WaitWObj` is used to wait for a work object on the conveyor before starting conveyor coordinated motion. When the `WaitWObj` instruction is successful then the conveyor work object is said to be connected to the RAPID program. See *WaitWObj - Wait for work object on conveyor on page 107*.

Once a RAPID program has connected to a work object on the conveyor then robot motion instructions and jogging commands can use this work object just as any other work object. When using the conveyor connected coordinated work object then all motions are relative to the work object on the conveyor.

The robot can switch between the conveyor coordinated work object and another coordinated work object in the system, but only one conveyor work object can be connected.

Disconnecting from a work object

The work object will remain connected until one of the following occurs:

- A `DropWObj` instruction is issued
- The maximum distance defined for the conveyor is reached
- Controller is restarted
- Power failure

The connection to the work object will not be lost when deactivating the conveyor mechanical unit, and will return on re-activation.

The instruction `DropWObj` ends the connection before the maximum distance is reached.

After a `DropWObj` instruction is issued it is possible to immediately wait for and connect to the next work object in the conveyor object queue.

Start window and queue tracking distance

The object queue is based on a set of distances relative to the conveyor and synchronization switch. See the following figure.

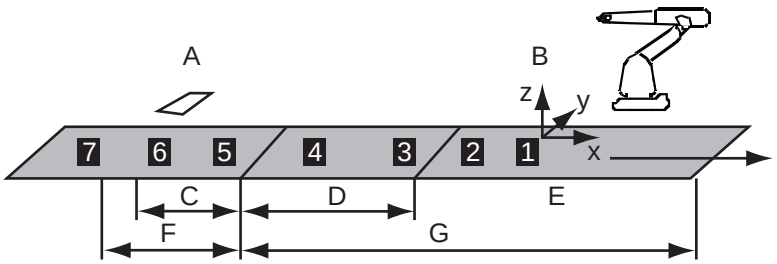

xx1200001076

A	Synchronization switch
B	Work object user frame
C	Minimum distance (*minimum distance*)

Continues on next page

© Copyright 2004-2025 ABB. All rights reserved.

D	Start window width (*StartWinWidth*)
E	Working area
F	Queue tracking distance (*QueueTrckDist*)
G	Maximum distance (*maximum distance*)
1-7	Objects on conveyor

The conditions and states of objects 1 to 7 can be described as in the following table.

For descriptions of the system parameters *StartWinWidth* and *QueueTrckDist* see *Type Fieldbus Command (DSQC377 only) on page 100* or *Type Conveyor Ici (DSQC2000) on page 102*. For descriptions of the system parameters minimum distance and and maximum distance see *Type Conveyor systems on page 101*.

Objects	Description
1	This object is connected as indicated by the coordinate frame attached to the position of the object on the conveyor.
2	Object 2 is outside the start window and is no longer tracked. This object will be skipped and cannot be connected by a `WaitWObj` instruction. It is skipped because the conveyor speed is such that coordination with the object could not be completed before the object moves outside the maximum distance or work area of the robot.
3 and 4	These objects are within the start window and are tracked. If object 1 is and 4 dropped via a `DropWObj` instruction then object 3 is the next object to be connected when a `WaitWObj` instruction is issued. Because objects 3 and 4 were in the start window, the `WaitWObj` instruction will not wait but return immediately with object 3.
5 and 6	These objects lie within the queue tracking distance and are tracked. If objects and 6, 3, and 4 were not present, then a `WaitWObj` instruction would stop program execution until object 5 entered the start window.
7	This object has not yet passed the synchronization switch and has not yet been registered.

Continues on next page

© Copyright 2004-2025 ABB. All rights reserved.

Coordinate systems

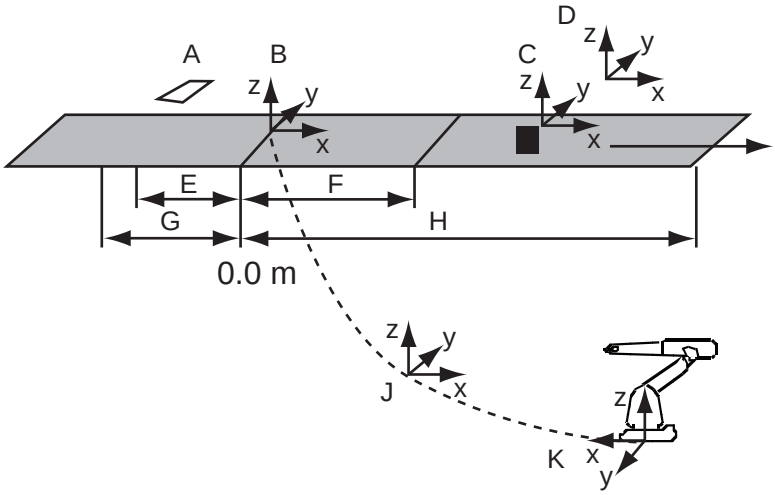

xx1200001077

A	Synchronization switch
B	Base frame for conveyor
C	User frame
D	Object frame
E	Minimum distance
F	Start window width
G	Queue tracking distance
H	Maximum distance
J	World frame
K	Base frame for robot

The preceding figure shows the principle coordinate frames used in conveyor tracking. See the following table.

Coordinate system	Relative to
Base frame of robot	World frame
World frame	N.a.
Base frame of conveyor	World frame
User frame, coordinated to conveyor	World frame via base frame of conveyor
Object frame (not shown)	User frame

Key frames and positions

The two key frames in conveyor tracking are the base frame for the conveyor and the user frame in the conveyor coordinated work object. The position of user frame in the conveyor coordinated work object is determined from the position of the conveyor base frame and the linear position of the conveyor in meters.

The encoder interface provides the position of the conveyor relative the synchronization switch and the *Queue Tracking Distance*. When the conveyor position is 0.0 meters, the user frame for the conveyor coordinated work object

Continues on next page

© Copyright 2004-2025 ABB. All rights reserved.

coincides with the base frame of the conveyor. As the conveyor moves, then the user frame in the conveyor coordinated work object moves along the x-axis of the conveyor base frame.

See *Operating manual - IRC5 with FlexPendant* and *Technical reference manual - RAPID Overview*.

© Copyright 2004-2025 ABB. All rights reserved.

2 Conveyor tracking modules

2.1 Network based conveyor tracking module CTM (DSQC2000)

Description

The CTM is a network based conveyor interface that provides connections for 4 encoders and 8 cameras.

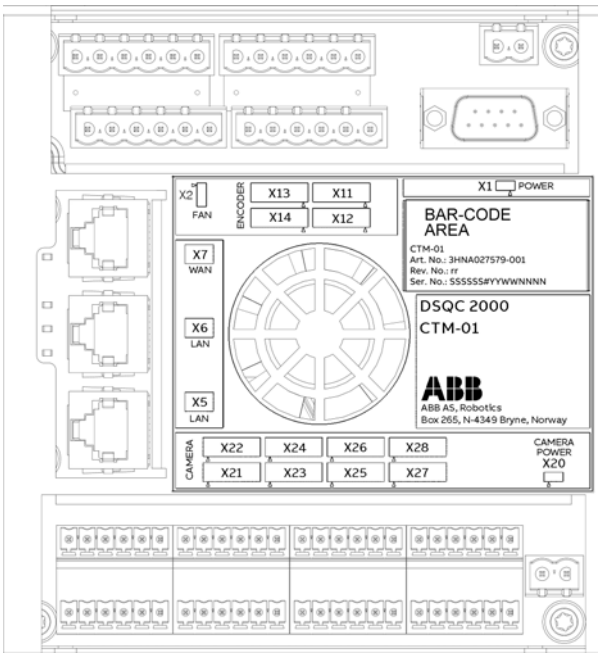

xx1800000346

The CTM uses network communication to share conveyor speed and position data with one or more robot controllers. It contains a WAN port, which is used to connect to the robot controllers and two LAN ports that can be used for installation and service purposes. It can be located either inside the robot controller or inside a separate cabinet. To improve the quality of the signals keep the CTM close to the encoders and the sensors.

Each of the encoder inputs support one 2 phase encoder. Each of the camera connections consist of a digital sync input, a 24 V digital trigger output, and a camera power output. The camera connection can also be used for other sync input sources, for example photocells.

The installation is described in section *Installation on page 39*.

Functions

Ethernet connections

The CTM includes WAN and LAN Ethernet ports. The WAN port of the CTM must be connected to the same Ethernet network as the robot controllers. The robot controllers should be connected to the same network with their WAN or LAN 3 ports. If the CTM is only used by one robot controller, for example an internally

Continues on next page

© Copyright 2004-2025 ABB. All rights reserved.

mounted CTM, the WAN port of the CTM should be connected to the LAN 2, LAN 3, or WAN port of the robot controller through a switch.

> **Note**
>
> If isolated LAN 3 is used for PROFINET, only PROFINET traffic will be possible on LAN 3.

Power distributions

The CTM has two power inlets, power inlet (X1) and an optional camera power inlet (X20). The power inlet is 24 V, it supplies power to all main function on the CTM module, as shown in the following figure:

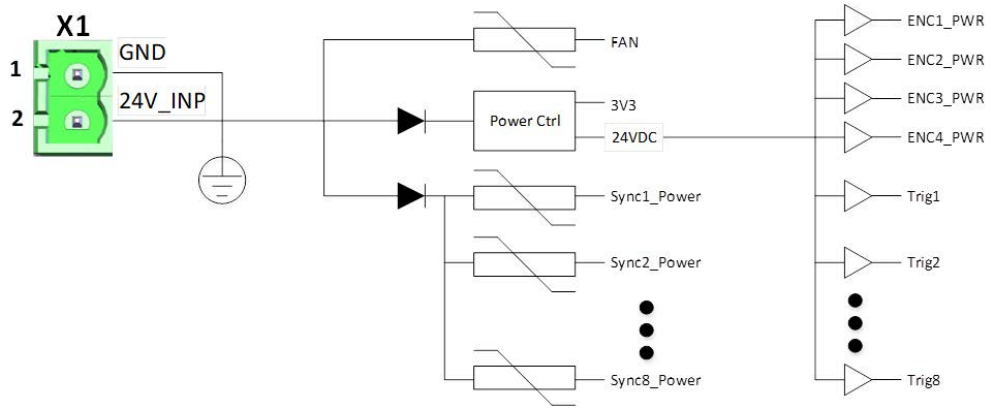

xx1800000347

The Camera power (X20) and its ground connection are separated from the rest of the CTM power. The camera power can only be routed from the power inlet through the CTM's current protection circuits to the individual outputs in the camera connectors (X21-X28), as shown in the following figure:

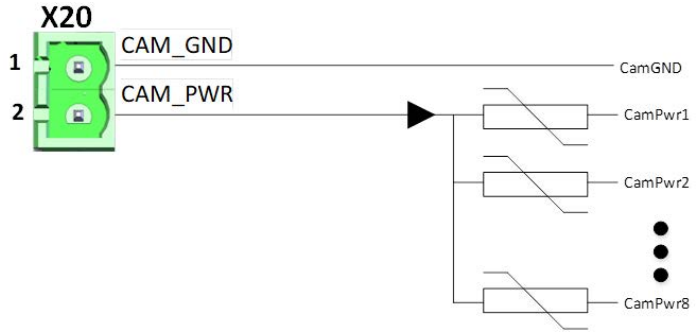

xx1800000348

The 24V_INP, 24VDC, CAM_PWR, and 3V3 are covered by diagnostics functions and their levels are displayed in RobotStudio.

Encoder power outputs

Each encoder connection (X11 - X14) supports an encoder power output. The encoder power output is 24 V with diagnostics functions, which is controlled by a high side driver circuit. In case of an overload or short circuit on the CTM, it is turned off. This output also contains a Discovery function, which can detect if an

Continues on next page

© Copyright 2004-2025 ABB. All rights reserved.

encoder is connected to the power. A constant test current of approximately 5 uA checks the output of the Discovery function, if the output is off it is activated. This test current will cause an unconnected trigger output pin to float at 10 V, even when the output signal is turned off. This power output is always on, except during startup, as shown in the following figure:

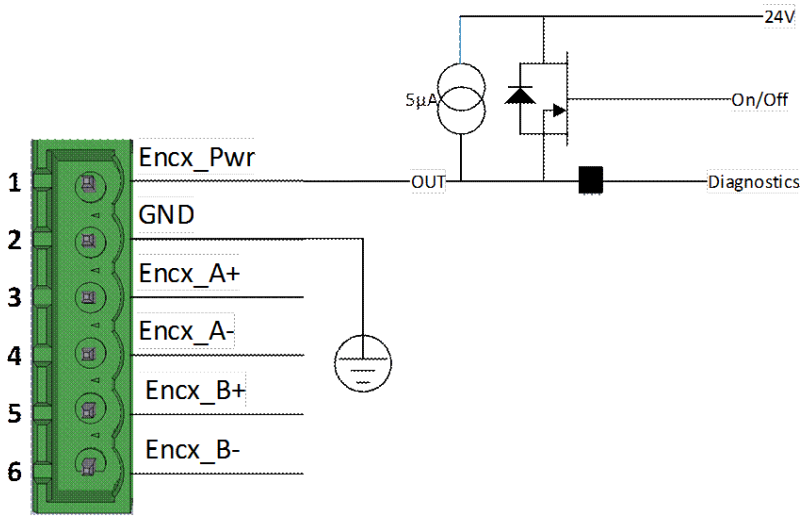

xx1800000349

Encoder inputs

Each encoder connection (X11-X14) supports a two phase encoder. The inputs are isolated and open ended to support NPN, PNP, and Push-Pull type encoders. The encoder can be powered from the CTM or by an external power supply, as shown in the following figure:

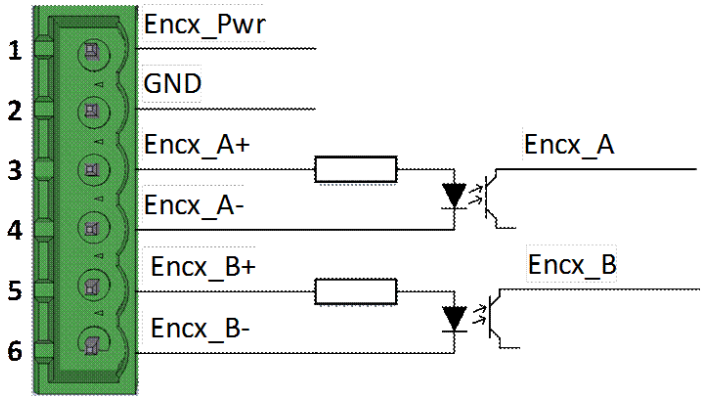

xx1800000350

Sync inputs

Each camera connector (X21 - X28) has a sync input which is isolated through opto couplers. These couplers are single ended, share a common GND with the CTM board, and support PNP and push-pull sensors. It is recommended to use

Continues on next page

© Copyright 2004-2025 ABB. All rights reserved.

the sync power output to power the sync sensor signal, as shown in the following figure:

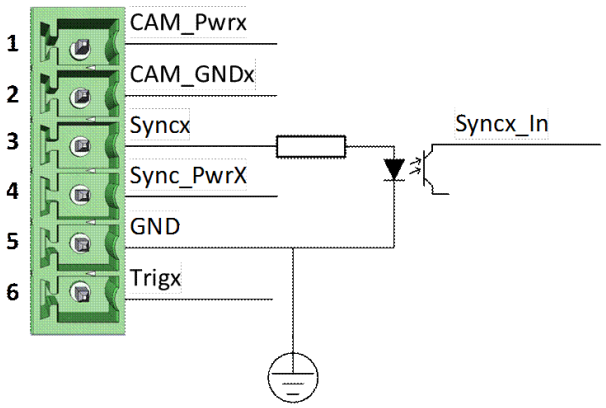

xx1800000351

The minimum time that the sync input must stay high on the CTM is 10 µs. Additionally the conveyor position must have changed since last sync signal (only 1 sync signal can be signaled in each unique encoder-position).

Trigger outputs

Each camera connector (X21 - X28) has a trigger output. This output is a 24 V digital output with diagnostics functions, which is controlled by a high side driver circuit. In case of an overload or short circuit on the CTM, it is turned off. This output also contains a Discovery function, which can detect if an encoder is connected to the power. A constant test current of approximately 5 uA checks the output of the Discovery function, if the output is off it is activated. This test current will cause an unconnected trigger output pin to float at 10 V, even when the output signal is turned off.

The following figure shows a drawing of the trigger output.

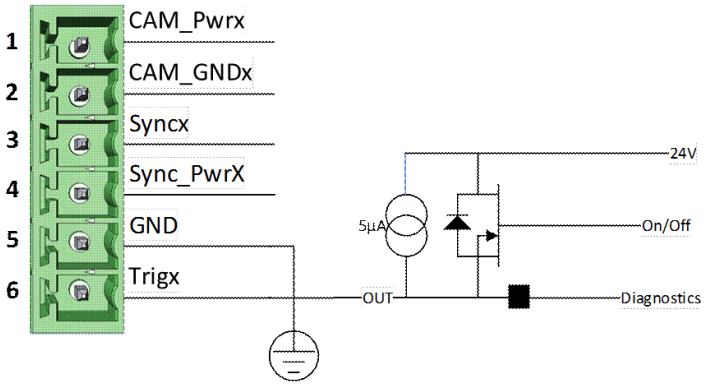

xx1800000352

Technical specification DSQC2000, CTM

General	
Power supply	24 VDC (-15/+20%), typically 200 mA (Current not including power outputs)
Operating temperature	+5°C - +65°C

Continues on next page

© Copyright 2004-2025 ABB. All rights reserved.

General	
Ethernet LAN	2 switched LAN ports, 100 Mbit (Only for installation and service purposes)
Ethernet WAN	1 WAN port, 100 Mbit
Dimensions	137 x 128 x 40 mm

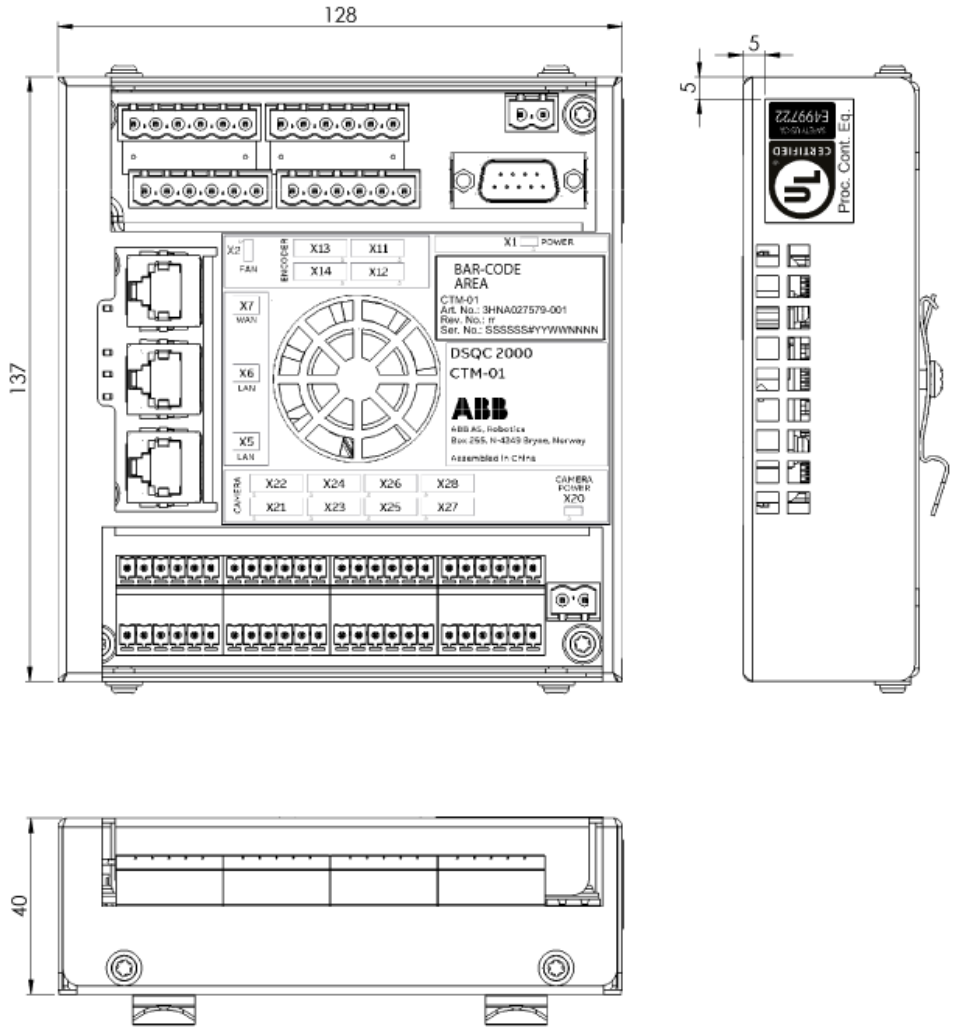

xx2000002184

Encoders	4 pcs (X11-X14)
Power output	24 VDC, max 120 mA With connection discovery and overload protection/diagnostic
Frequency	0 - 20 kHz
Input current	5.2 mA at 24 VDC
Voltage levels	15 VDC < '1' < 30 VDC, -3 VDC< '0' < 5 VDC
Supported encoder types	PNP, NPN Push-Pull (HTL)

Continues on next page

© Copyright 2004-2025 ABB. All rights reserved.

Cameras	8 pcs (X21-X28)
Camera power output	Supplied from X20 camera power inlet (normally 24 VDC, maximum 250 mA) With overload protection
Sync input signal	
Power output	24 VDC, 120 mA With connection discovery and overload protection/diagnostic
Input Current	5.2 mA at 24 VDC
Voltage levels	15 VDC < '1' < 30 VDC, -3 VDC< '0' < 5 VDC
Trigger output	
Digital output	24 VDC, Max 120 mA With connection discovery and overload protection/diagnostic
Minimum load	0.1 mA (Floating pins will drift towards voltage rails)

LED indicators

The CTM module has the following LED diagnostics and information:

- Module Status LED – BiColor LED displays the module status.

Status LED	Description
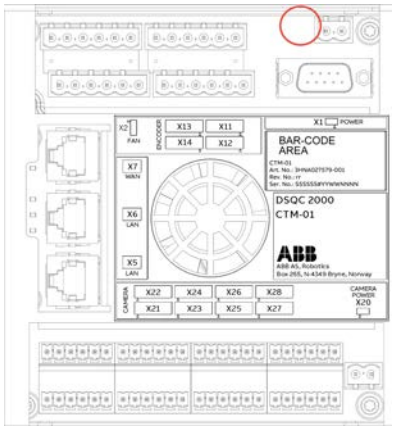 xx1800000353	**During startup** • Red (steady): Default at power up **OS loading** • Red (blinking): Startup completed OK **Run-time** • Green (steady): Up and running, OS loading completed OK

- Module Discovery LED – Indicates the connection status of the CTM module with a RobotStudio client.

  The discovery LED can be only green, or bicolor green + red.

Continues on next page

© Copyright 2004-2025 ABB. All rights reserved.

Discovery LED	Description
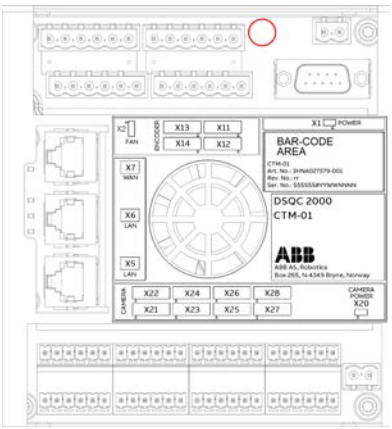 xx1800001604	**During startup** • LED off **OS loading** • LED off **Run-time** • Green + green (blinking), or, green + red (blinking): Connected and selected by a RobotStudio client.

- On the CPU board, there are three Ethernet connection status LEDs and a LED displaying the power status.

Ethernet Link Status	Description
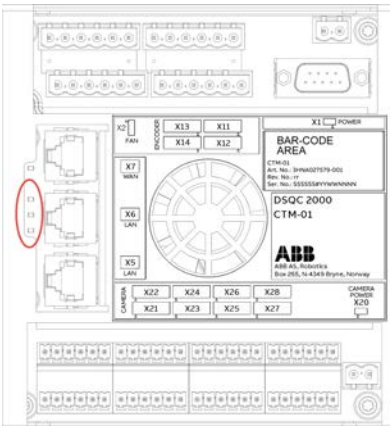 xx1800000354	**LED 1 - Ethernet LAN 1 LED** • Green LED: Ethernet LAN 1, 100 Mbit link enabled • Ethernet port 1, Connector X5 **LED 2 - Ethernet LAN 2 LED** • Green LED: Ethernet LAN 2, 100 Mbit link enabled • Ethernet port 2, Connector X6 **LED 3 - Ethernet WAN port LED** • Green LED: Ethernet WAN, 100M bit link enabled • Ethernet port 3, Connector X7

CPU board power status	Description
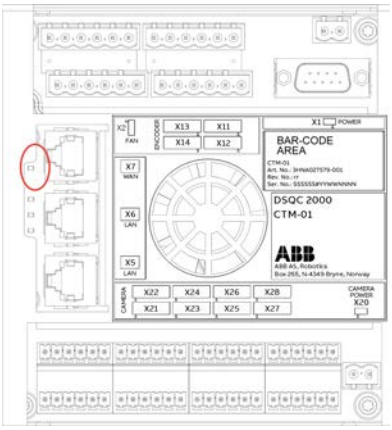 xx1800000355	**LED 4 - Power Status** • Green LED: 3.3 VDC power is OK

- Each encoder input has two status LEDs, one for each input pair.

Continues on next page

© Copyright 2004-2025 ABB. All rights reserved.

CPU board power status	Description
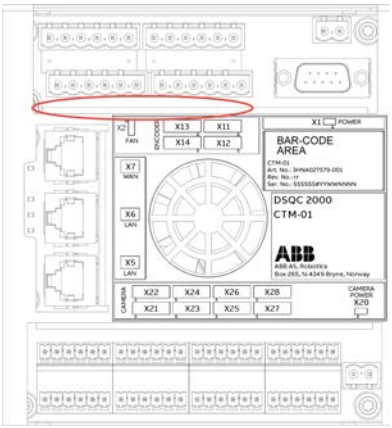 xx1800000356	**LED_ENC (1 - 4) A & B LEDs** For each encoder connection (X11 - X14) there is a LED displaying the input level of each encoder pair.

- A LED displaying the status of the camera power inlet.

Camera power status LED	Description
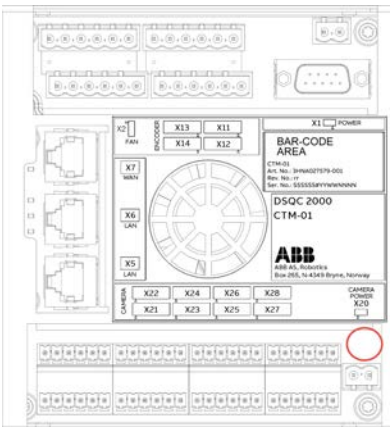 xx1800000357	**LED_CAM_PWR** Displays the power status of the optional camera power inlet.

- Each camera connection has two status LEDs, one for the sync signal input and one for the trigger signal output.

Camera status LED	Description
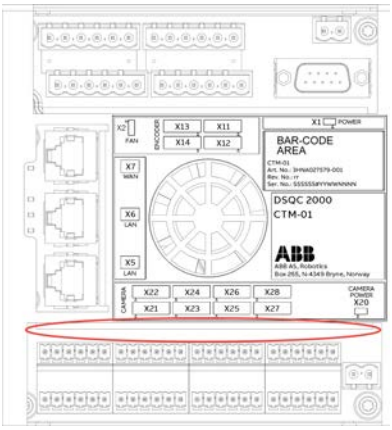 xx1800000358	**LED_SYNC (1 - 8) LEDs** For each camera connection (X21 - X28) there is a LED displaying the input stage of the sync input signal.
	LED_Trig (1 - 8) LEDs For each camera connection (X21 - X28) there is a LED displaying the output stage of the trigger output signal.

Continues on next page

© Copyright 2004-2025 ABB. All rights reserved.

Buttons

The CTM module has the following two user interactive buttons:

Buttons	Description
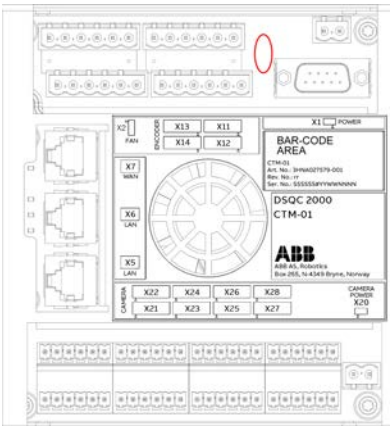 xx1800001605	**White SW1 button** • Short press: Devices connected to a RobotStudio client is highlighted. • Press and hold while the CTM is re-booting: CTM resets to default factory settings. **WARNING** Resetting the CTM to default factory settings will reinstall the current version of the firmware and reset all the passwords to default. It will reset configured updates, for example, Sync Separation settings for encoders will be reset to 0. Configured network settings will not be affected.
	Black SW2 button • Short press: CTM is restarted (warm start). • Long press: CTM is rebooted.

Connectors

X1 – CTM power inlet connector

X1	Pin number	Name	Function
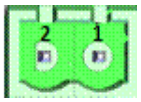 xx1800000359	1	GND	CTM power inlet
	2	24V_INP	

X3 – Console port for debugging

X3	Pin number	Name	Function
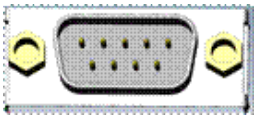 xx1800000360	1	(Not connected)	
	2	SCI_RX	Console receive
	3	SCI_TX	Console transmit
	4	(Not connected)	
	5	GND	
	6	(Not connected)	
	7	(Not connected)	
	8	(Not connected)	
	9	(Not connected)	

Continues on next page

© Copyright 2004-2025 ABB. All rights reserved.

X5-X6 – Ethernet connections

X5 – LAN port 1 connection

X5	Pin number	Name	Function
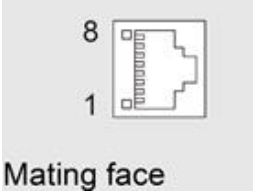 xx1800000361	1	TX1+	Transmit pair
	2	TX1-	Transmit pair
	3	RX1+	Receive pair
	4	i	
	5	i	
	6	RX1-	Receive pair
	7	i	
	8	i	

i Connected to a resistor network (provides a common mode termination)

X6 – LAN port 2 connection

X6	Pin number	Name	Function
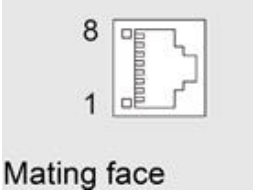 xx1800000361	1	TX2+	Transmit pair
	2	TX2-	Transmit pair
	3	RX2+	Receive pair
	4	i	
	5	i	
	6	RX2-	Receive pair
	7	i	
	8	i	

i Connected to a resistor network (provides a common mode termination)

X7 – WAN port connection

X7	Pin number	Name	Function
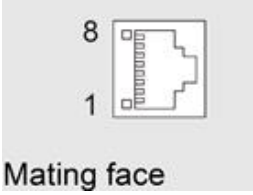 xx1800000361	1	TX3+	Transmit pair
	2	TX3-	Transmit pair
	3	RX3+	Receive pair
	4	i	
	5	i	
	6	RX3-	Receive pair
	7	i	
	8	i	

i Connected to a resistor network (provides a common mode termination)

Continues on next page

© Copyright 2004-2025 ABB. All rights reserved.

X11-X14 – Encoder connections

X11	Pin number	Name	Function
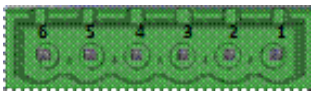 xx1800000362	1	ENC1PWR	Encoder 1 power output
	2	GND	
	3	ENC1A+	Encoder input 1, Pair A
	4	ENC1A-	
	5	ENC1B+	Encoder input 1, Pair B
	6	ENC1B-	

X12	Pin number	Name	Function
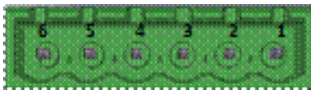 xx1800000362	1	ENC2PWR	Encoder 2 power output
	2	GND	
	3	ENC2A+	Encoder input 2, Pair A
	4	ENC2A-	
	5	ENC2B+	Encoder input 2, Pair B
	6	ENC2B-	

X13	Pin number	Name	Function
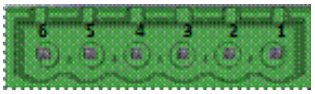 xx1800000362	1	ENC3PWR	Encoder 3 power output
	2	GND	
	3	ENC3A+	Encoder input 3, Pair A
	4	ENC3A-	
	5	ENC3B+	Encoder input 3, Pair B
	6	ENC3B-	

X14	Pin number	Name	Function
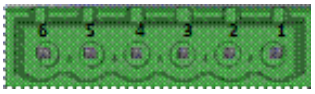 xx1800000362	1	ENC4PWR	Encoder 4 power output
	2	GND	
	3	ENC4A+	Encoder input 4, Pair A
	4	ENC4A-	
	5	ENC4B+	Encoder input 4, Pair B
	6	ENC4B-	

X20 – Camera power inlet

X20	Pin number	Name	Function
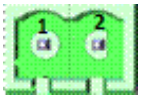 xx1800000363	1	CAM_GND	Camera power inlet
	2	CAM_PWR	

Continues on next page

© Copyright 2004-2025 ABB. All rights reserved.

X21-X28 – Camera connections

X21	Pin number	Name	Function
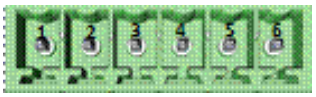 xx1800000364	1	CAMPWR1	Camera 1 power output
	2	CAMPWRGND	
	3	SYNC1	Sync 1 input signal
	4	SYNCPWR1	Power output for sync signal
	5	GND	GND for trigger and sync power
	6	TRIG1	Trigger 1 output

X22	Pin number	Name	Function
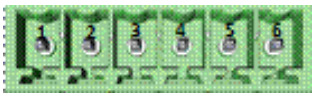 xx1800000364	1	CAMPWR2	Camera 2 power output
	2	CAMPWRGND	
	3	SYNC2	Sync 2 input signal
	4	SYNCPWR2	Power output for sync signal
	5	GND	GND for trigger and sync power
	6	TRIG2	Trigger 2 output

X23	Pin number	Name	Function
xx1800000364	1	CAMPWR3	Camera 3 power output
	2	CAMPWRGND	
	3	SYNC3	Sync 3 input signal
	4	SYNCPWR3	Power output for sync signal
	5	GND	GND for trigger and sync power
	6	TRIG3	Trigger 3 output

X24	Pin number	Name	Function
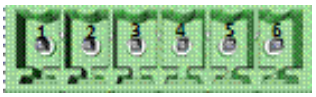 xx1800000364	1	CAMPWR4	Camera 4 power output
	2	CAMPWRGND	
	3	SYNC4	Sync 4 input signal
	4	SYNCPWR4	Power output for sync signal
	5	GND	GND for trigger and sync power
	6	TRIG4	Trigger 4 output

Continues on next page

© Copyright 2004-2025 ABB. All rights reserved.

X25	Pin number	Name	Function
xx1800000364	1	CAMPWR5	Camera 5 power output
	2	CAMPWRGND	
	3	SYNC5	Sync 5 input signal
	4	SYNCPWR5	Power output for sync signal
	5	GND	GND for trigger and sync power
	6	TRIG5	Trigger 5 output

X26	Pin number	Name	Function
xx1800000364	1	CAMPWR6	Camera 6 power output
	2	CAMPWRGND	
	3	SYNC6	Sync 6 input signal
	4	SYNCPWR6	Power output for sync signal
	5	GND	GND for trigger and sync power
	6	TRIG6	Trigger 6 output

X27	Pin number	Name	Function
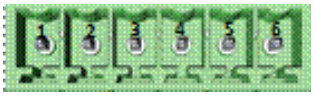 xx1800000364	1	CAMPWR7	Camera 7 power output
	2	CAMPWRGND	
	3	SYNC7	Sync 7 input signal
	4	SYNCPWR7	Power output for sync signal
	5	GND	GND for trigger and sync power
	6	TRIG7	Trigger 7 output

X28	Pin number	Name	Function
xx1800000364	1	CAMPWR8	Camera 8 power output
	2	CAMPWRGND	
	3	SYNC8	Sync 8 input signal
	4	SYNCPWR8	Power output for sync signal
	5	GND	GND for trigger and sync power
	6	TRIG8	Trigger 8 output

© Copyright 2004-2025 ABB. All rights reserved.

2.2 DeviceNet based conveyor tracking unit DSQC377B

Description

The DSQC377B is a DeviceNet based conveyor interface that provides connection for one encoder and one digital input (synchronization switch), and includes queue tracking functions.

Technical specification for conveyor tracking unit DSQC377B

General	
Power supply	24 VDC, typically 50 mA, maximum 200 mA
Operating temperature	+5°C - +60°C
Communication	DeviceNet
Power output (Sync and encoder)	Max total 250 mA

Encoders	2 pcs (X20)
Frequency	0 - 20 kHz
Input current	6.8 mA at 24 VDC
Voltage levels	18 VDC < ‘1’ < 35 VDC, -35 VDC< ‘0’ < 2 VDC
Supported encoder types	PNP Push-Pull (HTL)

Sync input signal	2 pcs (X20)
Frequency	0 - 20 kHz
Input current	6.8 mA at 24 VDC
Voltage levels	18 VDC < ‘1’ < 35 VDC, -35 VDC< ‘0’ < 2 VDC
Supported encoder types	PNP Push-Pull (HTL)

The installation is described in section *Installation on page 39*.

© Copyright 2004-2025 ABB. All rights reserved.

3 Installation

3.1 Hardware connections

Introduction to hardware installation

For the option *Indexing Conveyor Control*, the conveyor is controlled by a motor unit (ABB or other). See *Installing the additional axis for servo control on page 157*.

© Copyright 2004-2025 ABB. All rights reserved.

3.2 Installing the encoder for conveyor tracking

Selecting encoder type

The encoder provides a series of pulses indicating the motion of the conveyor. This is used to synchronize the motions of the robot to the motion of the conveyor.

The encoder has two pulse channels, A and B, that differ in phase by 90°. Each channel will send a fixed number of pulses per revolution depending on the construction of the encoder.

The number of pulses per revolution for the encoder must be selected in relation to the gearing between the conveyor and the encoder. The pulse ratio from the encoder should be in the range of 1250-2500 pulses per meter of conveyor motion. The pulses from channels A and B are used in quadrature to multiply the pulse ratio by 4 to get counts. This means that the control software will measure 5000 to 10000 counts per meter for an encoder with the pulse ratio given above. Reducing the number of measured counts below 5000 will reduce the accuracy of the robot tracking. Increasing the number of measured counts above 10000 will have no significant effect as inaccuracies in robot and cell calibration will be the dominating factors for accuracy.

The encoder must be of 2 phase type for quadrature pulses, to register reverse conveyor motion, and to avoid false counts due to vibration etc. when the conveyor is not moving.

Output signal	Typical spec, Open collector PNP output encoder
Voltage	10-30 V (normally supplied by 24 VDC from DSQC2000, CTM-01)
Current	50-100 mA
Phase	2 phase with 90 degree phase shift
Duty cycle	50%

An example encoder is the *Lenord & Bauer GEL 262*.

See also the encoder information in section *Network based conveyor tracking module CTM (DSQC2000) on page 25*.

See also the encoder information in section *DeviceNet based conveyor tracking unit DSQC377B on page 38*.

Minimum and maximum counts per second

Minimum speed	The lower limit on the number of counts per second before the encoder signals zero speed is 40 counts per second. If the speed of the conveyor is lower, zero speed will be indicated. At 10,000 counts per meter, the minimum conveyor speed is 4 mm/s.
Maximum speed	The upper limit on the number of counts per second before the encoder can no longer keep track of the counts along the conveyor is 20,000 counts per second. At 10,000 counts per meter, the maximum conveyor speed is 2,000 mm/s.

Continues on next page

© Copyright 2004-2025 ABB. All rights reserved.

3.2.1 Encoder location

Description

The encoder is normally installed on the conveyor drive unit. The encoder can be connected to an output shaft on the drive unit, directly or via a gear belt arrangement.

Prerequisites

If the encoder is connected directly to a drive unit shaft, a flexible coupling must be used to prevent applying mechanical forces to the encoder rotor. Do not use a coupling using a plastic or rubber hose. If the drive unit includes a clutch arrangement, the encoder must be connected on the conveyor side of the clutch.

If the conveyor drive unit is located a long distance away from the robot then the conveyor itself can be a source of inaccuracy as the conveyor will stretch or flex over the distance from the drive unit to the robot cell. In such a case it may be better to mount the encoder closer to the robot cell with a different coupling arrangement.

© Copyright 2004-2025 ABB. All rights reserved.

3.2.2 Encoder cables

Description

The encoder should be connected to the robot by a screened cable to reduce noise.

The noise immunity will be better with screened twisted pair cable. Cable length, pulse frequency and environmental conditions must be taken in account, case by case.

The cable screen can by grounded in one of the following ways:

- Grounded in the controller end, open in the encoder end.
- Grounded in both ends.
- High frequency connection with a capacitor between screen and ground in the encoder end.

The method for screen connection depends on the environment and can be different from case to case. Parameter like cable length, encoder frequency and other equipment with power electronics (motor-drive) and so on influence on the electromagnetic environment.

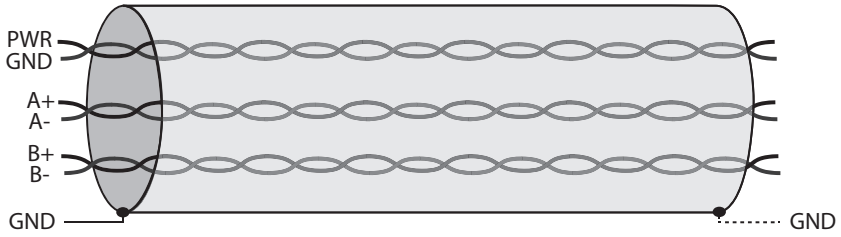

xx1800001539

PWR	Power
GND	Ground
A+, A-	Encoder signal A
B+, B-	Encoder signal B

© Copyright 2004-2025 ABB. All rights reserved.

3.3 Connecting the encoder to the CTM

Description

An encoder is connected to a single encoder interface in the CTM. If multiple robots are following the same conveyor, its speed and position are supplied by the CTM to all the robot controllers through a network communication.

The conveyor tracking module CTM (DSQC2000) can be located either inside the robot controller or a cabinet close to the conveyor encoder (to reduce the cable length between the CTM and the encoder).

Encoder connections

The CTM has four independent encoder connections supporting PNP, Push-Pull, and NPN encoders.

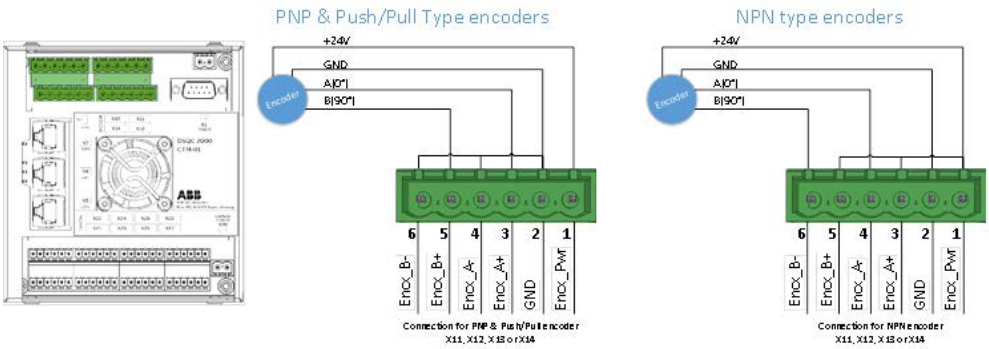

xx1800000365

The configurations support the Connection Discovery functions and overload protection/diagnostic of the encoder power output.

If the encoder is externally powered, then the CTM power pins must not be connected. This configuration removes the connection discovery and overload protection and diagnostic functions of the encoder power output.

Continues on next page

© Copyright 2004-2025 ABB. All rights reserved.

3.3 Connecting the encoder to the CTM
Continued

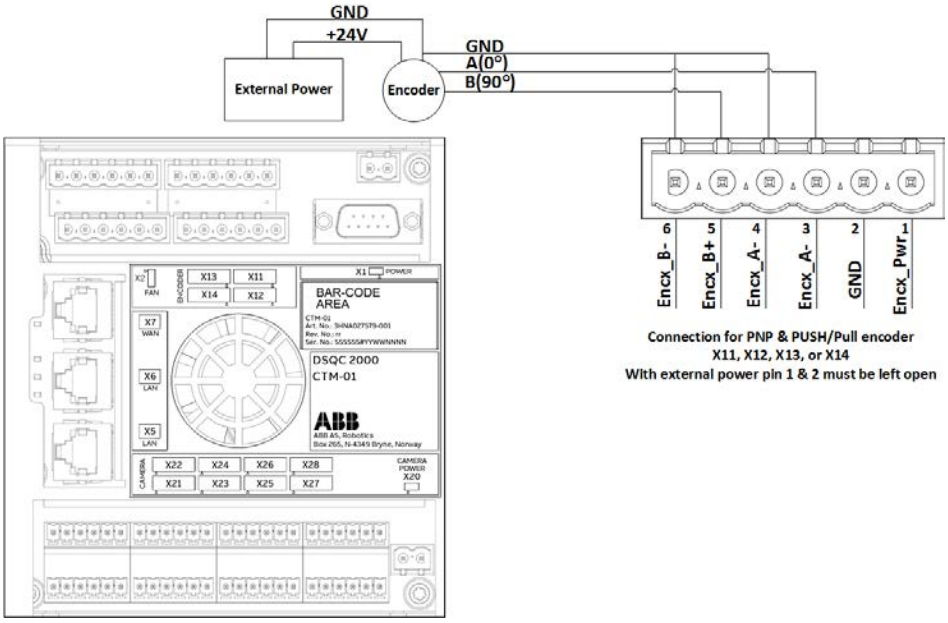

xx1800000366

Connecting to multiple encoder modules

An encoder requires additional power supply, when connecting to several encoder interfaces. This extra power supply can be acquired by an external power source or from the connected encoder interfaces by using a diode on the power outputs to prevent parallel wiring of the power supplies.

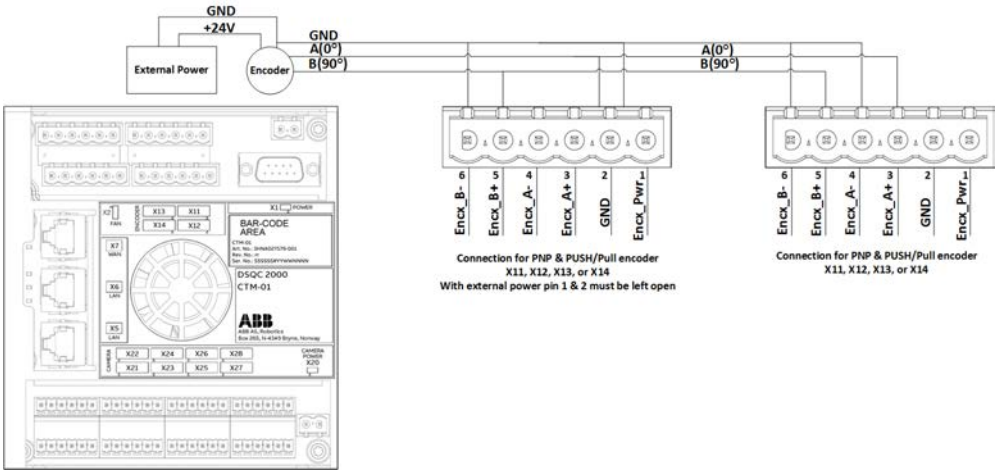

xx1800000367

These configurations do not support overload protection and also do not provide the functions connection discovery and overload diagnostic of the encoder power.

Connecting the CTM to the robot controller

The CTM must be powered by a 24 V power supply and connected to Ethernet. There are three main installation methods for the Ethernet communication. The power supply connection and Ethernet connection may vary between the different robot controllers, see the product manual for the robot controller.

Continues on next page

© Copyright 2004-2025 ABB. All rights reserved.

Mounted in robot controller, sharing conveyor info with other controllers

When the CTM module is connected to the same network as the robot controllers, the conveyor information may be shared from the CTM module to all the robot controllers.

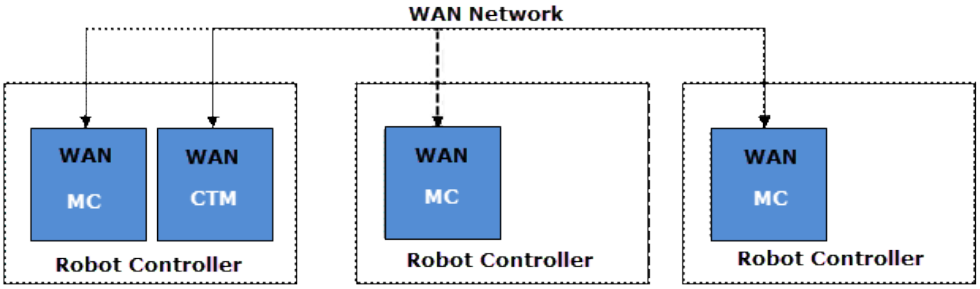

xx1800000368

Note

LAN 3 can also be used on the main computer, it is the default for internally mounted CTM.

Mounted outside robot controller, sharing conveyor info with other controllers

The CTM module can be mounted externally, that is outside the robot controller.

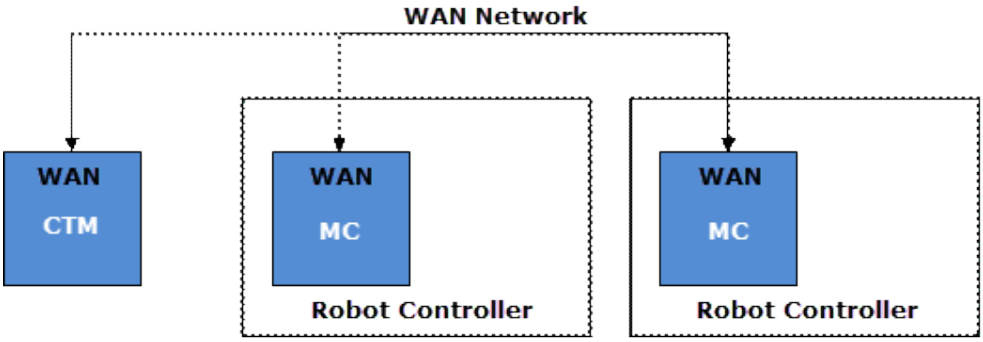

xx1800000369

Note

LAN 3 can also be used on the main computer, it is the default for internally mounted CTM.

Continues on next page

© Copyright 2004-2025 ABB. All rights reserved.

Mounted inside robot controller, no sharing of conveyor info

If the conveyor is not shared with any other robot controller, the CTM may be installed inside the controller using the LAN network. This will reduce the number of external WAN ports required on the robot controller.

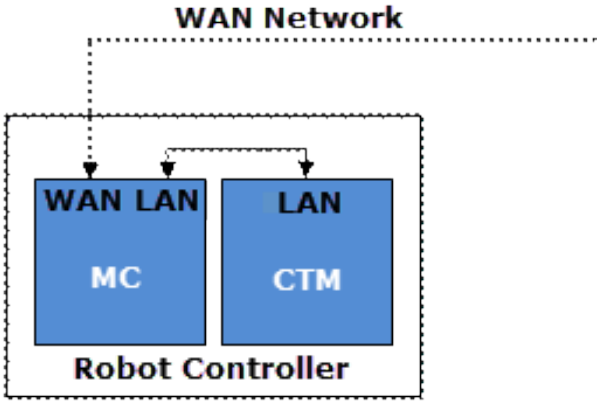

xx1800000370

Note

The LAN port is used on the CTM and LAN 2 or LAN 3 is used on the main computer.

© Copyright 2004-2025 ABB. All rights reserved.

3.4 Connecting the encoder to the DSQC377B

Encoder connections

A single encoder can be connected to one or more DSQC377B units. The DSQC377B units can be connected to the same robot controller or to different robot controllers. Similarly, two DSQC377B units can be connected to the same or different robot controllers. For example, when two different robots follow the same conveyor.

Connecting to several controllers

An encoder that is connected to more than one robot controller, can be powered through the robot controllers or from an external power supply.

When the encoder is powered from several robot controllers, a diode must be installed in each of the 24 VDC connections. This is to prevent parallel wiring of the power supplies.

Continues on next page

© Copyright 2004-2025 ABB. All rights reserved.

Example connection for PNP encoder

The below diagram shows a common encoder for two robots.

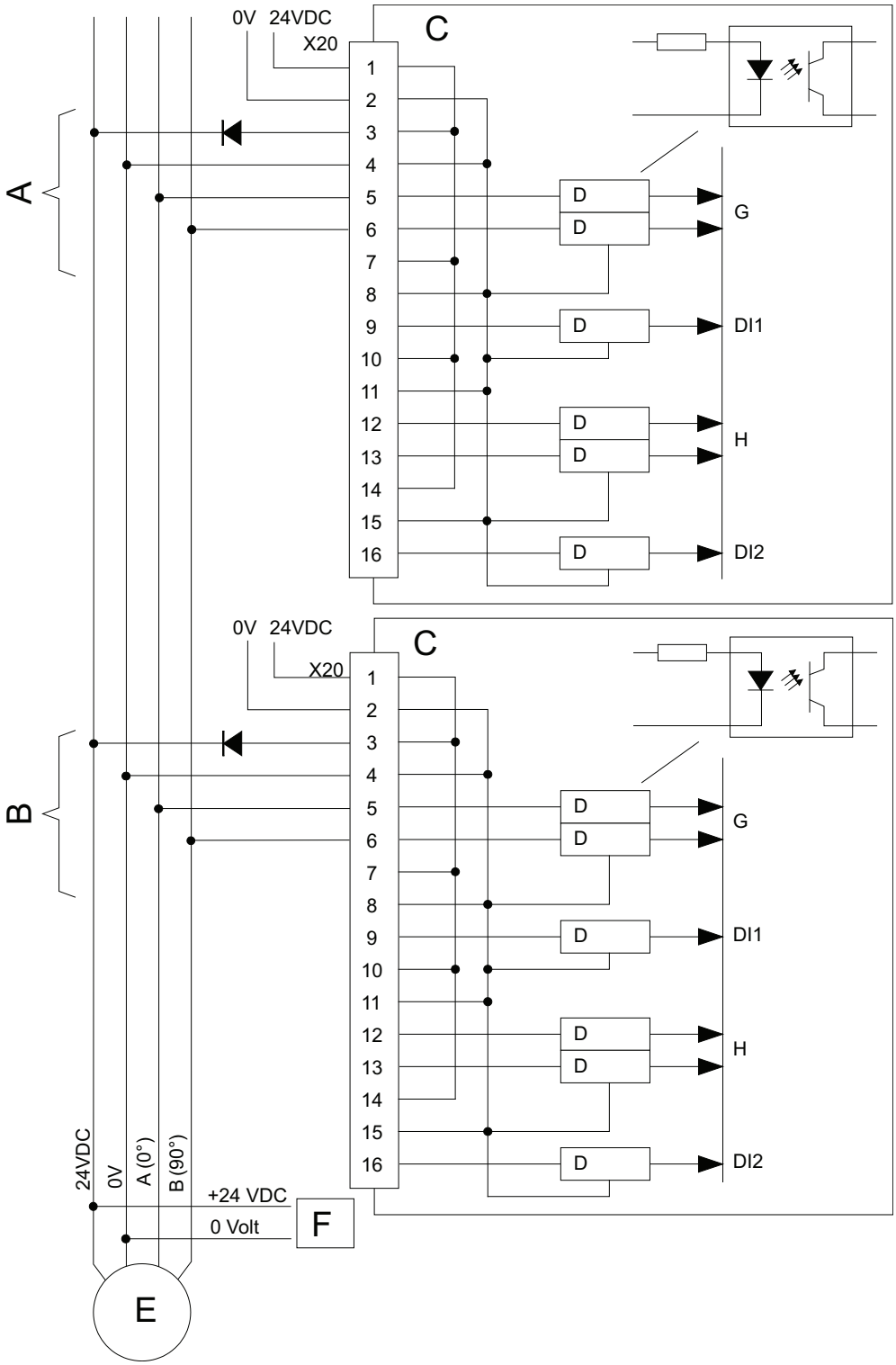

xx1200001078

A	Robot 1	
B	Robot 2	

Continues on next page

© Copyright 2004-2025 ABB. All rights reserved.

C	Encoder interface or queue tracking unit (with galvanic insulation)	DSQC354, DSQC377, DSQC377A, DSQC377B. The units support only PNP and 'push-pull' (E2) encoders.
D	Opto	
E	Encoder	
F	External power	Do not connect internal supply if external is used.
G	Encoder 1	
H	Encoder 2	Used for backup encoder only.
DI1	Digital input 1	
DI2	Digital input 2	Used for backup encoder only.

Connecting the DSQC377B to the robot controller

See *Product manual - IRC5*, for details on connecting the DSQC377B to the robot controller. See also *Application manual - DeviceNet Master/Slave*.

© Copyright 2004-2025 ABB. All rights reserved.

3.5 Connecting a camera to the CTM

Description

The CTM contains 8 camera connections to connect cameras or sync signals. The cameras can be powered separately or through the CTM.

The sync signal input supports PNP and Push-Pull type sensors and can be powered by the Sync_Pwr output or externally. The trigger output is a 24 V digital output signal.

The configuration shown in the following figure, supports overload protection on CameraPower, Sync_Power, and Trig_output. The Connection Discovery function and the overload protection/diagnostics exist on Sync_Power and Trig_output.

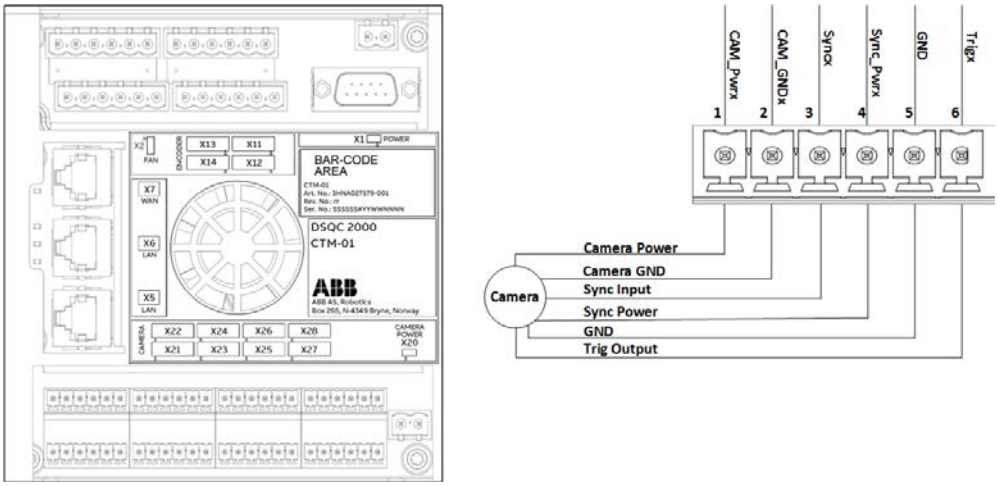

xx1800000371

The configuration shown in the following figure, does not supports overload protection on CameraPower. The Connection Discovery function and the overload protection/diagnostics exist on Sync_Power and Trig_output.

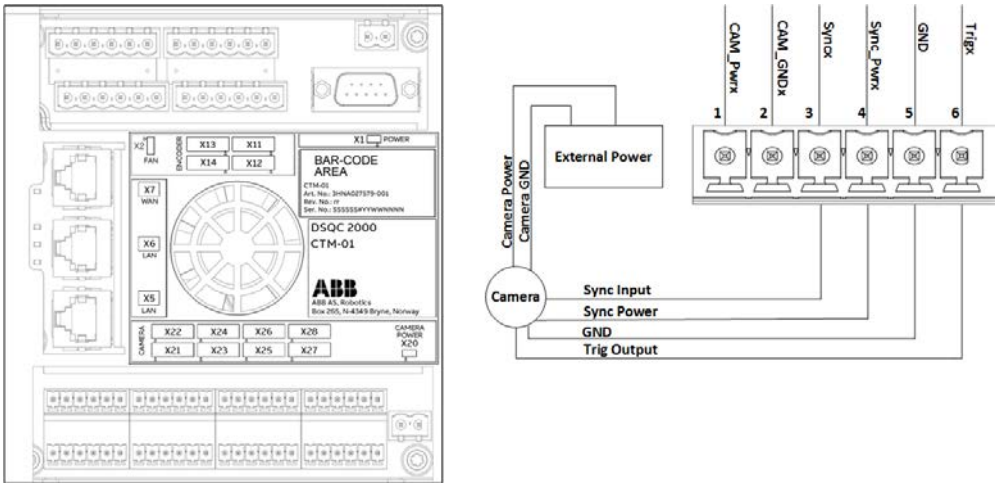

xx1800000372

© Copyright 2004-2025 ABB. All rights reserved.

3.6 Connecting the sync switches to the CTM

Description

The sync input signal in each of the camera connectors can also be used as a sync switch. It can be powered by Sync_Pwr output or externally and supports PNP and Push-Pull type sensors, as shown in the following figure:

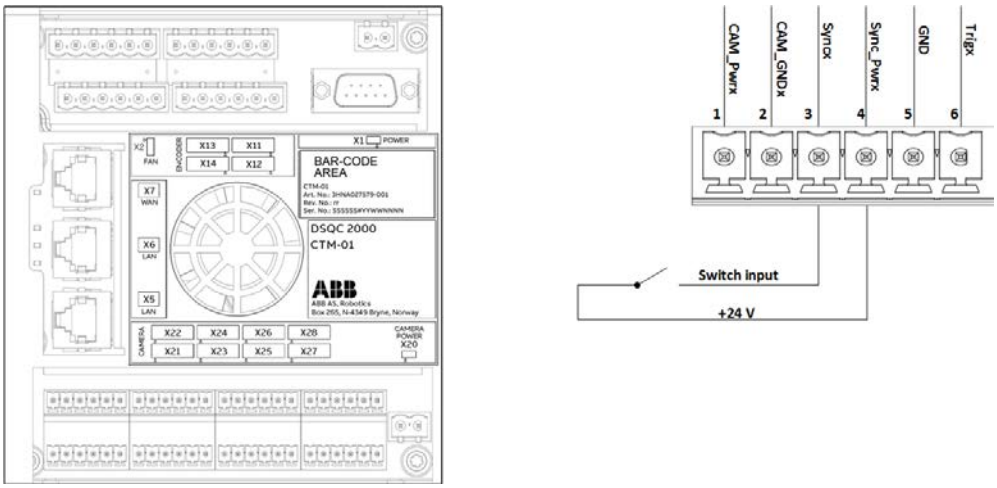

xx1800000375

© Copyright 2004-2025 ABB. All rights reserved.

This page is intentionally left blank

4 Conveyor Tracking tab in RobotStudio

Introduction

The Conveyor Tracking tab contains a tree view browser displaying the connected DSQC2000 units and other related objects. It is used as a user interface to configure settings and monitor live signals of the DSQC2000 tracking units.

> **Note**
>
> While in the tree view browser or any of the related object dialogues, pressing F1 will open the *Application manual - Conveyor tracking*.

To open the Conveyor Tracking tab:

	Action
1	Click **Conveyor Tracking** from the **Configuration** group, in the **Controller** tab. The **Conveyor Tracking** tab opens.

> **Note**
>
> For detailed information about firewall settings for RobotStudio, see section "System requirements\Firewall settings" in *Operating manual - RobotStudio*.

Connecting and adding a CTM

Connecting a CTM

One of the following methods can be used to connect the CTM to the computer:

1. **Connecting the CTM through a WAN port**

   This method is recommended only after a fixed IP address is configured for the CTM - WAN interface, see *Network settings on page 54*.

   Connect the computer with a fixed IP address to the same WAN network, through a network switch or a direct connection. Configure the computer's IP address with the CTM's subnet.

   Example:

CTM - WAN interface	192.168.8.xx
Computer network interface	192.168.8.246

   The default factory setting for WAN is **Obtain an IP address automatically** (DHCP client). To connect a WAN with this setting a DHCP server is required on the network.

2. **Connecting through a LAN port**

   This method is recommended for the initial setup of a CTM with default factory settings. It can also be used for debugging, when there is a connection problem with the CTM.

   Configure the fixed IP address of the computer with the subnet of the CTM – LAN interface. The LAN interface has IP address 192.168.126.200.

Continues on next page

© Copyright 2004-2025 ABB. All rights reserved.

Example:

CTM - LAN interface	192.168.126.200
Computer network interface	192.168.126.246

Adding a CTM

To add a CTM, a connection must be established between the computer and the CTM:

	Action
1	Click **Add CTM**. The **Add CTM** dialog box displays all the detected CTMs.
2	Select the CTM from the list and click **OK**. The CTM is added to the tree view object browser.

Identifying a CTM in RobotStudio

If RobotStudio is connected to a network with multiple CTMs, it may become difficult to identify a particular CTM. This can be avoided by a direct connection via LAN port, for more information, see *Connecting a CTM on page 53*, section *Connecting through a LAN port*.

To simplify identification, it is recommended to assign a unique and descriptive name for every CTM, for more information, see *Rename on page 56*.

One of the following methods can also be used to identify a CTM:

- Select the device in the tree view browser, its corresponding green discovery LED will start blinking on the CTM module.
- Press the white SW1 button on the CTM module once, a green dot will start blinking on the corresponding CTM symbol in the tree view browser.

WARNING

Do not press the SW1 button while the CTM is restarting, this will reset the CTM to default factory settings and any updates or upgrades will be lost.

Network settings

The WAN port of the CTM is connected to the robot controllers through an Ethernet network. To establish communication between the robot controllers and the CTM, a fixed IP address must be assigned to the CTM. The IP address should be located on the same subnet as the network interface of the connected robot controllers.

To change the network settings:

	Action
1	Right-click the CTM in the tree view browser, select **Network settings**, and then click **WAN interface**.
2	Enter the **IP address**, the **Subnet mask**, and the **Default gateway** (optional) and then click **OK**.

Continues on next page

© Copyright 2004-2025 ABB. All rights reserved.

Authenticate

A CTM has the following two predefined users:

User	Default password	Description
abbadmin	abbadmin	It is an advanced user and is used for advanced maintenance and troubleshooting.
ctmuser	ctmuser	It is a normal user and is used for everyday maintenance and troubleshooting.

Note

Login as an advanced user to upgrade the firmware.

To use some features of a CTM, a login is required. If you are using the default credentials, login is automatic to the Conveyor Tracking tab. Otherwise, authentication is requested whenever required.

Note

It is recommended to change the password to improve security.

Appropriate credentials are required to make any modifications to the CTM configuration and firmware.

WARNING

You cannot recover a lost password, so ensure the password is not lost or forgotten.

To login as a user:

	Action
1	Right-click the CTM and click **Authenticate** > **Login as a Different User**.
2	Enter the required credentials and click **Login**.

To log off the current user:

	Action
1	Right-click the CTM and click **Authenticate** > **Log Off**.

To change the password of the current user:

	Action
1	Right-click the CTM and click **Authenticate** > **Change password**.
2	Change the password and click **OK**.

Continues on next page

© Copyright 2004-2025 ABB. All rights reserved.

Rename

You can rename the CTM, the encoders, and the sensors.

To rename any object:

	Action
1	Right-click the object in the tree view browser and then click **Rename**. The **Rename** dialog box opens.
2	Enter a new name for the object and then click **OK**. The new names are stored in the CTM and will be displayed in RobotStudio, once it is restarted.

Configuring an encoder

You can configure some settings of an encoder, for example, Speed filter.

To configure an encoder:

	Action
1	Right-click the encoder in the tree view browser and then click **Configure encoder**. The **Configure encoder** tab opens.
2	Modify the settings and click **Apply**.

An encoder can be configured as used or not used. This change in configuration will affect how the encoder is displayed in the tree view browser. To tune the encoder speed filtering, you can define the **Low-pass filter cut off frequency** in the **Speed filter** section.

For DSQC2000: The low-pass filter is to smoothen the speed-calculation generated by CTM based on the encoder-frequency. By default, it is configured as a 2nd order IIR-filter with a cut-off frequency of 10 Hz, so signal-noise is reduced for disturbances < ~100 ms.

Configuring a sensor

You can configure some settings of a sensor, for example, Sync Separation.

To configure a sensor:

	Action
1	Right-click the sensor in the tree view browser and then click **Configure sensor**. The **Configure sensor** dialog box opens.
2	Modify the settings and click **Apply**.

Sync separation is used to filter an unstable signal in the sync input signal. It defines the minimum encoder distance (counts) between two sync pulses from the sensor. When the actual distance is shorter than this value, then the second sync pulse is ignored.

The sensor type can be configured as **I/O Sensor**, **Camera**, or **Not used**. This change in configuration will affect how the sensor is displayed in the tree view browser.

Note

It is recommended to set the same sync separation value for all the encoders.

Continues on next page

© Copyright 2004-2025 ABB. All rights reserved.

The camera pulse width defines the pulse length (ms) used with the camera trigger signal.

> **Note**
>
> For high speed conveyors, the pulse length must be shorter than the time between consecutive camera images, so that:
>
> Camera pulse width in ms < 1000 * (Trigger distance in mm / Max conveyor speed in mm/s)

Restart

Overview

A restart or reboot of a CTM can be performed using the tree view browser.

Restart

A restart is required after modifying the settings of the CTM.

To restart the CTM:

	Action
1	Right-click the desired CTM in the tree view browser and then click **Restart**.

Reboot

A reboot is slower than a restart, it corresponds to the restart after cycling the power.

To reboot the CTM:

	Action
1	Right-click the desired CTM in the tree view browser and then click **Reboot**.

Signals

There are 3 types of live signals: encoder, sensor, and other. You can sort and filter the signals by various properties:

Signal property	Description
Name	Name of the signal
Type	Signal value type, for example, float
Value	Signal live value
Unit	Signal value unit, for example, Hz
Category	Signal category, for example, Public or Internal
Sensor	Sensor number (1-8)
Encoder	Encoder number (1-4)
Function	Signal name used in the robot controller, for example, *TrigVis*
Label	Connector on the CTM, for example, X11
Description	Information on what the signal represents

Continues on next page

© Copyright 2004-2025 ABB. All rights reserved.

List all signals

To list all the signals:

	Action
1	Right-click the desired CTM in the tree view browser and then click **Signals**.

List all encoder signals

To list all the encoder signals:

	Action
1	Right-click the desired encoder in the tree view browser and then click **Signals**.

List all sensor signals

To list all the sensor signals:

	Action
1	Right-click the desired sensor in the tree view browser and then click **Signals**.

Backup and Restore

You can save a backup of the CTM settings. The backup will contain:

- Data about the CTM configurations, including encoder and sensor parameters and new names. While restoring the backup, these settings are applied to the target CTM.
- Network settings
- Firmware version information

Creating a backup of the CTM

Keeping a backup is recommended to simplify the task of replacing the CTM with a new unit.

To create a backup of the CTM:

	Action
1	Right-click the CTM in the tree view browser and then select **Create Backup…** . The **Create Backup from CTM** dialog box opens.
2	Enter a **Backup Name**.
3	Enter or select a save **Location** and click **OK**. A backup of the CTM is created in the entered location.

Restoring a backup

To restore a backup of the CTM:

	Action
1	Right-click the CTM in the tree view browser and then select **Restore Backup…** . The **Restore from Backup to CTM** dialog box opens.
2	Enter or browse to the required **Location**, select backup folder and click **Open**. The backup of the CTM saved in the folder is displayed in the list of the **Available backups** section.
3	Select the required backup from the list and click **OK**. The CTM's settings will be restored according to the backup, after a restart of the CTM.

Continues on next page

© Copyright 2004-2025 ABB. All rights reserved.

Firmware upgrade

A firmware upgrade is normally provided by ABB, as a .cab file.

> **WARNING**
>
> It is recommended to backup the CTM configurations, as a firmware upgrade may result in the factory default network settings.

To upgrade the firmware of the CTM:

	Action
1	Login as an advanced user to upgrade the firmware, see *Authenticate on page 55*.
2	Right-click the CTM and then click **Firmware Upgrade**. The **Firmware Upgrade** dialog box opens. It displays the current version of the firmware.
3	Click **Browse**, navigate to the .cab file and then click **Open**. The **Verify Software** dialog box opens. It displays the publisher of the file.
4	If the publisher is trusted, click **Yes**. The **Firmware Upgrade** dialog box opens. It displays the new firmware version.
5	Verify it and click **Upgrade**, to download it. The CTM will restart after the download and installation.

After a firmware upgrade, you may have to restore the network settings of the CTM.

Restore a backup (see *Restoring a backup on page 58*) or manually enter the correct network settings.

© Copyright 2004-2025 ABB. All rights reserved.

This page is intentionally left blank

5 Configuration and calibration

5.1 About software installation and configuration

Introduction

This section is a step-by-step instruction on how to install, connect, configure and calibrate conveyor work areas for conveyor tracking. This includes robot controller, conveyor tracking module, encoders and sensors for object detection.

The encoder and conveyor tracking module descriptions in this chapter are not valid for the option *Indexing Conveyor Control*.

Installed software on delivery

The conveyor tracking functions and the RAPID instructions are specified in the license. The conveyor software is already installed on delivery.

The Conveyor Tracking option installs one conveyor work area to the robot controller configuration (that is, in the system parameters). To add more conveyor work areas, see *Installing additional conveyor work areas for conveyor tracking on page 85*.

The PickMaster 3 option has a Conveyor Configuration suboption, that can be used to specify how many conveyor work areas should be installed (0 – 6).

© Copyright 2004-2025 ABB. All rights reserved.

5.2 Configuring conveyor tracking module (DSQC2000)

Introduction

The conveyor tracking module (CTM, DSQC2000) provides an interface to monitor up to 4 encoders and 8 object detecting sensors. Encoders and sensors can be shared for usage with different conveyor work areas. One CTM unit can be used simultaneously by up to 40 robot controllers. To be able to use a CTM, the robot controller needs the software option *Tracking Unit Interface*.

Cybersecurity for installations with CTM

For information on addressing security threats in a network installation with CTM and ABB robots, see *Operating manual - IRC5 Integrator's guide*.

Connecting a robot controller to the CTM

The robot controller is connected to the CTM through an Ethernet network.

The CTM has 3 network interfaces: WAN and 2 LAN. The WAN interface is used to communicate with robot controllers.

If the CTM is shared by more than one robot controller, it should be connected to the LAN 3 or WAN port of the robot main computers. When used with a single robot controller, additionally it is possible to connect a CTM on the private network, for example, LAN 2 of the robot main computer.

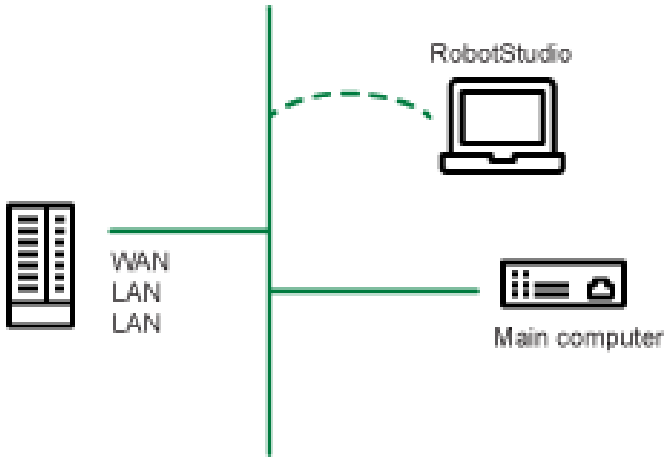

xx1800000382

Note

To establish a communication between the robot controller and the CTM, the IP address of the robot controller must be on the same subnet as the CTM.

To set up and verify a communication between the CTM and the robot controller:

	Action
1	Configure the IP address of the CTM, see *Network settings on page 54*.

Continues on next page

© Copyright 2004-2025 ABB. All rights reserved.

	Action
2	Configure a RobICI device. For example, CTM1, in the robot controller, see *Configuring CTM in the robot controller on page 67*.
3	To configure the IP address of the RobICI device, use the IP address of the CTM. In RobotStudio, right-click the RobICI device in the RobICI Device Type under the I/O System tree and select **Edit RobICI Device(s)**. Assign the IP address to the Server IP address field.
4	Configure the IP address of the selected robot controller network interface (LAN 2, LAN 3, or WAN), see *Examples on page 63*.
5	Restart the robot controller.
6	Check the state of the I/O devices. The communication is established, if the CTM1 is in **Running** state.

Examples

Example 1

If the CTM is connected to the robot controller - WAN interface (Public Network):

CTM WAN interface	192.168.8.48
Robot controller, RobICI device IP address	192.168.8.48
Robot controller, WAN interface	192.168.8.50

To view or change the IP address of the robot controller on the WAN interface, edit the network settings in RobotStudio. See *Operating manual - IRC5 Integrator's guide*.

Example 2

If the CTM is connected to the robot controller - LAN 3 interface:

CTM WAN interface	192.168.7.48
Robot controller, RobICI device IP address	192.168.7.48
Robot controller LAN 3 interface	192.168.7.50

To configure the IP address of the robot controller on the LAN 3 interface, edit the network settings in RobotStudio. See *Operating manual - IRC5 Integrator's guide*.

Example 3

If the CTM is connected to the robot controller - LAN 2 interface (Private Network):

CTM WAN interface	192.168.125.20
Robot controller, RobICI device IP address	192.168.125.20
Robot controller, LAN 2 interface	192.168.125.1

To view or change the IP address of the robot controller on the Private Network, edit the network settings in RobotStudio. See *Operating manual - IRC5 Integrator's guide*.

Configuring the CTM with RobotStudio

The CTM unit is configured using RobotStudio. You can connect a computer with RobotStudio to the WAN or LAN port of the CTM.

In the **Controller** tab click on **Conveyor Tracking** from the **Confiuration** group. A **Conveyor Tracking** tab is displayed.

Continues on next page

© Copyright 2004-2025 ABB. All rights reserved.

You can search for any conveyor tracking units on the network, see *Connecting and adding a CTM on page 53*.

Minimum configuration

The setup of The IP address of the WAN interface is the minimum configuration required, see *Network settings on page 54*. A communication between the CTM and a robot controller can be established only after the IP address is defined.

You can change the following parameters:

- Name of the CTM and name of individual encoders and sensors, see *Rename on page 56*.
- Encoder parameters, see *Configuring an encoder on page 56*.
- Sensor parameters, see *Configuring a sensor on page 56*.

© Copyright 2004-2025 ABB. All rights reserved.

5.3 Verifying the installation of encoders and sensors (DSQC2000)

Description

The CTM provides functionality that simplifies the verifications of installed encoders and sensors. These verifications can be done by connecting RobotStudio to the CTM. The verifications are based on the monitoring of certain CTM signals and are independent of robot controllers.

Verifying if the encoder is electrically connected to the power

This test is only applicable if the encoder is powered by the encoder interface.

To verify if the encoder is electrically connected to the power:

	Action
1	Open the signals for the encoder, see *List all encoder signals on page 58*.
2	Restart the CTM.
3	Verify the value of *TwoPhaseEncX:PowerWired*. If the value is 1, it indicates that the encoder is connected to the power supply. If the value is 0, it indicates that the encoder is not connected to the power supply.

Verifying if the trigger signal is electrically connected to a camera

To verify if the trigger signal is electrically connected to a camera:

	Action
1	Open the signals for the sensor, see *List all sensor signals on page 58*.
2	Verify if the value of *DigoutX:Wired* is 1, else check the connection of the trigger signal and the GND with the camera.

Verifying the encoder function

To verify the encoder function:

	Action
1	Open the signals for the encoder, see *List all encoder signals on page 58*. The encoder function can be checked by monitoring the signal *EncX:position* that displays the encoder count for encoder X.
2	Move the conveyor and verify if the *EncX:position* changes accordingly.
3	If the value does not change or is unstable, verify if the encoder is properly installed, electrically and mechanically.

Verifying the sensor function

To verify the sensor function:

	Action
1	Open the signals for the sensor, see *List all sensor signals on page 58*. The sensor function can be checked by monitoring the signal *syncXencY:Value*, it displays the encoder count for encoder Y at the latest sync input event on sensor X.
2	Move the conveyor Y a short distance.
3	Generate a sync input from the sensor, for example by detecting a object with an I/O sensor or by triggering an image with a camera sensor.

Continues on next page

© Copyright 2004-2025 ABB. All rights reserved.

	Action
4	Verify if the *syncXencY:Value* is same as the value of the *EncY:position*.
5	If the value is not the same, verify if the encoder is properly installed, electrically and mechanically.

Verifying the direction of positive motion

To verify the direction of positive motion:

	Action
1	Open the signals for the encoder, see *List all encoder signals on page 58*. The *EncX:position* signal displays the encoder count for encoder X.
2	Move the conveyor towards the robot and verify if the signal value increases or decreases. The *EncX:position* signal displays the encoder count for encoder X.
3	If the signal value increases, the direction of positive motion is correct. If the signal value decreases, reverse the A and B inputs from the encoder to the encoder interface.

Identifying the gear ratio

Open the signals for the encoder, see *List all encoder signals on page 58*.

The gear ratio defines the motion distance of the conveyor as a function of measured encoder counts.

The gear ratio can be used configure the system parameter *CountsPerMeter* for the conveyor work area. It can be identified with the following procedure:

	Action
1	Record the first encoder count C1 as EncX:position.
2	Move the conveyor forward for at least1 meter. Measure the actual movement distance D. For a linear conveyor, D is measured in meter. For a rotational conveyor, D is measured in radians.
3	Record a second encoder count C2 as EncX:position.
4	Calculate the gear ratio = (C2 – C1) / D.

© Copyright 2004-2025 ABB. All rights reserved.

5.4 Configuration of robot controllers (DSQC2000)

Configuring CTM in the robot controller

In the robot controller configuration, the CTM is represented as a RobICI I/O device on the RobICI network. The RobICI network is an internal ABB communication protocol, see *Operating manual - IRC5 Integrator's guide*.

The option *Conveyor Tracking* installs one RobICI device to the RobICI network.

The option *PickMaster 3* installs one RobICI device if 1-6 conveyor work areas have been selected in the sub-option *Conveyor Configuration*.

Additional RobICI devices can be added using RobotStudio. There are templates available to setup *Conveyor Tracking Device 2*, *Conveyor Tracking Device 3*, and *Conveyor Tracking Device 4*. However, one RobICI device (with 4 encoder inputs) is sufficient in most scenarios. For example, in a scenario with 5-6 conveyor work areas, some of them are typically located on the same conveyor belt and can share the same encoder.

To add a device in RobotStudio, in the controller tab, select **Configuration** -> **I/O System** -> **RobICI Device**. Right-click and select **New RobICI Device**. Update **Use values from template:** by selecting the appropriate template. Click **OK** to save the new device.

The following needs to be configured for a RobICI device:

- The configured IP address of the CTM.

Continues on next page

© Copyright 2004-2025 ABB. All rights reserved.

Configuring a conveyor work area using CTM

For each conveyor work area, a selection needs to be made on which encoder and which sensor that shall be used for conveyor tracking.

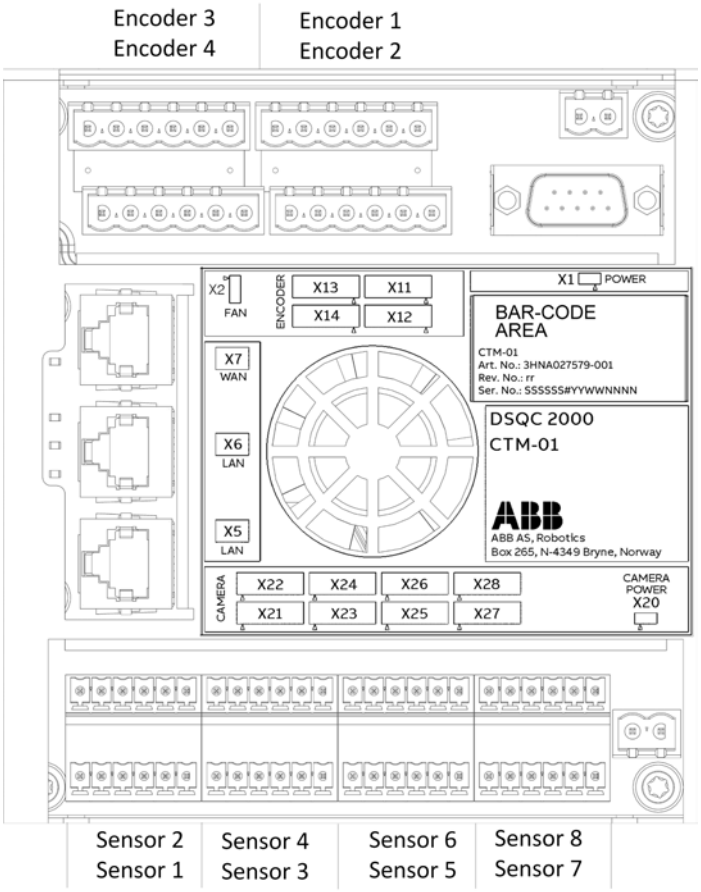

xx1800000384

The selection is made by modifying the DeviceMap of nine I/O signals that belongs to the conveyor work area. The nine signals are mapped to the configured CTM device. The value in the DeviceMap column represent encoder and sensor numbers.

> **Note**
>
> One encoder may be used in parallel by multiple conveyor work areas on the same robot controller, or on different robot controllers. One sensor may also be used by multiple conveyor work areas, however, the sensor trigger function should not be operated simultaneously by more than one work area.

Example 1

In this example, conveyor work area 1 is used with encoder 1 and sensor 1 on CTM1. The DeviceMap is adjusted accordingly:

Name	Device	DeviceMap	DeviceMap digits represent
c1Counts	CTM1	Enc1:position	Encoder 1
c1CountsPerSec	CTM1	Enc1:velocity	Encoder 1

Continues on next page

© Copyright 2004-2025 ABB. All rights reserved.

Name	Device	DeviceMap	DeviceMap digits represent
c1SpeedBandWidth	CTM1	e1_SpeedBand-Width:SetPoint	Encoder 1
c1TrigVis	CTM1	Digout1:Setpoint	Sensor 1
c1TrigAutoMode	CTM1	Cam1:Connect	Sensor 1
c1TrigAutoDist	CTM1	Cam1:Interval	Sensor 1
c1TrigAutoEncNo	CTM1	Cam1Enc:DeviceNo	Sensor 1
c1SoftSync	CTM1	Sync1Enc1:SyncTrig	Sensor 1, encoder 1
c1CntFromEnc	CTM1	Sync1Enc1:Value	Sensor 1, encoder 1

Example 2

In this example, conveyor work area 2 is used with encoder 2 and sensor 8 on CTM1. The DeviceMap is adjusted accordingly:

Name	Device	DeviceMap	DeviceMap digits represent
c2Counts	CTM1	Enc2:position	Encoder 2
c2CountsPerSec	CTM1	Enc2:velocity	Encoder 2
c2SpeedBandWidth	CTM1	e2_SpeedBand-Width:SetPoint	Encoder 2
c2TrigVis	CTM1	Digout8:Setpoint	Sensor 8
c2TrigAutoMode	CTM1	Cam8:Connect	Sensor 8
c2TrigAutoDist	CTM1	Cam8:Interval	Sensor 8
c2TrigAutoEncNo	CTM1	Cam8Enc:DeviceNo	Sensor 8
c2SoftSync	CTM1	Sync8Enc2:SyncTrig	Sensor 8, encoder 2
c2CntFromEnc	CTM1	Sync8Enc2:Value	Sensor 8, encoder 2

Example 3

In this example, conveyor work area 3 is used with encoder 4 and sensor 5 on CTM1. The DeviceMap is adjusted accordingly:

Name	Device	DeviceMap	DeviceMap digits represent
c3Counts	CTM1	Enc4:position	Encoder 4
c3CountsPerSec	CTM1	Enc4:velocity	Encoder 4
c3SpeedBandWidth	CTM1	e4_SpeedBand-Width:SetPoint	Encoder 4
c3TrigVis	CTM1	Digout5:Setpoint	Sensor 5
c3TrigAutoMode	CTM1	Cam5:Connect	Sensor 5
c3TrigAutoDist	CTM1	Cam5:Interval	Sensor 5
c3TrigAutoEncNo	CTM1	Cam5Enc:DeviceNo	Sensor 5
c3SoftSync	CTM1	Sync5Enc4:SyncTrig	Sensor 5, encoder 4
c3CntFromEnc	CTM1	Sync5Enc4:Value	Sensor 5, encoder 4

© Copyright 2004-2025 ABB. All rights reserved.

5.5 Direction of positive motion from the encoder (DSQC377 only)

Description

If an encoder is used, the encoder direction for positive motion can be checked after the correct installation of the conveyor tracking software.

Run an object past the synchronization switch while viewing the conveyor position on the FlexPendant, from the **Jogging** or the **I/O** window.

If the value is negative, reverse the A and B inputs from the encoder to the encoder interface.

© Copyright 2004-2025 ABB. All rights reserved.

5.6 Calibrating CountsPerMeter (DSQC377)

Description

If the exact gear ratio between the encoder and the conveyor is unknown (typically the case) then the system parameter *CountsPerMeter* must be calibrated using either a tape-measure or the robot TCP as a measuring device.

Calculating CountsPerMeter

The parameter can be calibrated using either a tape-measure or the robot TCP as a measuring device. If the robot TCP is used as the measuring device then an accurately defined tool must be used. The DSQC377B will keep track of all objects that have passed the synchronization switch but have not yet passed the 0.0 m point. It is not possible to connect to these objects. First configure the DSQC377B for 10,000 *CountsPerMeter* (default) and the system parameter *QueueTrckDist* of 0.0 m.

Calibrating CountsPerMeter and QueueTrckDist

Move an object past the sync switch and stop the conveyor. Read the conveyor position from the **Jogging** window, `position_1`. Move the conveyor at least 1 meter and read `position_2`. The accuracy will be best if this distance is large as possible within the work space. Use a tape-measure (or differences in robot tool position) to find the exact distance between `position_1` and `position_2`. This is called `measured_meters`.

Use this formula to calculate *CountsPerMeter*:

$$CountsPerMeter = \frac{(position_2 - position_1) * 10000}{(measured_meters))}$$

Use this procedure to modify *CountsPerMeter* and *QueueTrckDist* on the FlexPendant.

1. On the ABB menu, tap **Control panel** and **Configuration** and then tap **Topics** and **I/O**.
2. Tap the type **Fieldbus Command**.
3. Tap **CountsPerMeter** and change the value to 10000.
4. Tap OK.
5. Tap **QueueTrckDist** and change the value to 0.0.
6. Tap **OK**.
7. Measure and calculate the exact value as described below, see *Calculating CountsPerMeter on page 71*.
8. Change the value of **CountsPerMeter** again to the calculated value.
9. Tap **OK**.

See *Type Fieldbus Command (DSQC377 only) on page 100*.

© Copyright 2004-2025 ABB. All rights reserved.

5.7 Calibrating CountsPerMeter (DSQC2000)

Description

If the exact gear ratio between the encoder and the conveyor is unknown (typically the case) then the system parameter *CountsPerMeter* must be calibrated using either a tape-measure or the robot TCP as a measuring device.

If the robot TCP is used as the measuring device then an accurately defined tool must be used.

If the gear ratio is identified for the encoder, see *Identifying the gear ratio on page 66*, its value can be used for *CountsPerMeter*. Alternatively, the method mentioned in the *Calculating and calibrating CountsPerMeter on page 72* section can be used.

Calculating and calibrating CountsPerMeter

The counts from the encoder can be found by reading a predefined I/O signal. For example CNV1 the signal name is c1counts. Note the counts for the current conveyor position (named `counts_1` in the formula below) and then move away the conveyor at least 1 meter. Read the counts again (named `counts_2`) and measure the distance the conveyor is moved (named `measured_meters`). The accuracy will be best if this distance is large as possible within the work space. Use a tape-measure (or differences in robot tool position) to find the exact distance.

Use this formula to calculate *CountsPerMeter*:

$$CountsPerMeter = \frac{(counts_2 - counts_1)}{(measured_meters)}$$

Use this procedure to modify *CountsPerMeter*.

1. Open the **Configuration Editor** and select **Topics** and **Process**.
2. Select the type **Conveyor Ici**.
3. Select **CountsPerMeter** and change the value.

© Copyright 2004-2025 ABB. All rights reserved.

5.8 Calibrating the conveyor base frame

Introduction to the conveyor base frame

The accuracy of the conveyor tracking depends on the accuracy of the conveyor base frame calibration. For linear conveyors, use a method that uses the robot TCP to measure the position and orientation of the conveyor in the work space.

Prerequisites

Before calibrating the base frame of the conveyor the values for the *CountsPerMeter* and *QueueTrkDist* must be correct. See *Calibrating CountsPerMeter (DSQC377) on page 71* or *Calibrating CountsPerMeter (DSQC2000) on page 72*.

The conveyor base frame calibration method will use the measurement of 4 positions of the same object on the conveyor to determine the conveyor base frame (B), as shown in the following figure.

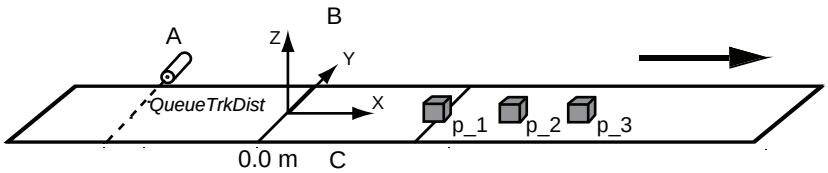

xx1200001098

A	Synchronization switch
B	Base frame
C	Conveyor distance

Before defining the 4 positions, an object must be defined on the conveyor.

Creating the work object (option Conveyor Tracking)

Use this procedure to create a work object. To create a work object for a servo controlled indexing conveyor, see *Creating the work object on page 164*.

1. Step forward through a RAPID program containing the two instructions:
   ```
   ActUnit CNV1;
   WaitWObj wobjcnv1;
   ```
   Define the conveyor coordinated work object, see *Defining a conveyor coordinated work object on page 90*.
2. Run the conveyor until an object passes the sync switch and the 0.0 m point.
   The `WaitWObj` instruction will end execution.
3. Stop the conveyor.
4. Calibrate the base frame, see *Calibrating the base frame on page 74*.

> **Note**
>
> Once an object is on the conveyor and beyond the 0.0 m point, it is possible to use the base frame calibration method to define the conveyor position and orientation in the work space.

Continues on next page

© Copyright 2004-2025 ABB. All rights reserved.

Creating the work object when the conveyor is not moving (option Conveyor Tracking)

The controller uses the signal *doCxxNewObjStrobe* to create an object using the current encoder counter and will generate a pulse on the signal *doCxxCntToEncStr*. Use these RAPID instructions as an example to create a work object when the conveyor is not moving.

```
ActUnit CnvMecUnit;
WaitTime 0.5;
DropWObj WorkObject;
WaitTime 0.5;
!
CONNECT NewObj WITH ObjTrap;
ISignalDO cxxCntToEncStr,1,NewObj;
PulseDO cxxNewObjStrobe;
WaitUntil NewObjReported=TRUE;

TRAP ObjTrap
  WaitTime 0.2;
  NewObjReported:=TRUE;
  RETURN;
ENDTRAP
```

Limitations

The conveyor speed must be zero

All other objects in the queue will be removed

Creating the work object (option PickMaster)

Load and run the RAPID program PrepareCalib.prg. It is located in the HOME folder.

Select the conveyor work area, CNVX, which needs calibration and let the program execution complete.

Calibrating the base frame

Use this procedure to calibrate the conveyor base frame (applicable for both *Conveyor Tracking* and *Indexing Conveyor Control*).

If the PickMaster option is used, see *Application manual - PickMaster 3*.

1. On the FlexPendant, open the **Calibration** window and select the conveyor.
2. Tap **Base Frame**.
3. Tap **4 Point**.
4. Select the first point, **Point 1**. This point will be the origin for the user frame in the conveyor coordinated work object.
5. Point out Point 1 on the object on the conveyor with the robot TCP.
6. Modify the position by tapping **ModPos**.
7. Move the conveyor in the positive direction and repeat the above for the points 2, 3, and 4.
8. Tap **OK** to calculate the base frame for the selected conveyor mechanical unit.

Continues on next page

© Copyright 2004-2025 ABB. All rights reserved.

A dialog with the calibration result is shown. The calculation log shows the conveyor base frame expressed in the world coordinate system, see *Calculation result for the base frame on page 75*.

9 To save the calculation result in a separate file for later use in a PC:
   a Tap **File**.
   b Specify a name and a location where to save the result.
   c Tap **OK**.
10 If the estimated error is:
   - Acceptable, tap **OK** to confirm the new user frame.
   - Not acceptable, tap **Cancel** and redefine.
11 Restart the controller and verify the results of the calibration. See *Verifying the base frame calibration on page 75*.

Calculation result for the base frame

Field	Description
Unit	The name of the mechanical unit for which the definition of base frame has be done.
List contents	Description
Method	Displays the selected calibration method.
Mean error	The accuracy of the robot positioning against the reference point.
Max error	The maximum error for one positioning.
Cartesian X	The x coordinate for the base frame.
Cartesian Y	The y coordinate for the base frame.
Cartesian Z	The z coordinate for the base frame.
Quaternion 1-4	Orientation components for the base frame.

Verifying the base frame calibration

If the PickMaster 3 option is used, see *Application manual - PickMaster 3*, section *Verifying the calibrations*.

After restarting the controller, use this procedure to verify the conveyor base frame calibration.

1 Create a work object, see:
   - *Creating the work object (option Conveyor Tracking) on page 73*, for *Conveyor Tracking*.
   - *Calibrating the base frame on page 164*, for *Indexing Conveyor Control*.
2 Move the robot tool center point back to the previously chosen point 1 on the work object.
3 In the **Jogging** window, read the X, Y, Z position of the tool center point. Make sure to use the correct tool and wobjcnv1.
4 The robot TCP x, y, and z position in the work object coordinates should be 0.0 mm (or very close to that).

Continues on next page

© Copyright 2004-2025 ABB. All rights reserved.

5 In the **Jogging** window, select the work object wobjcnv1 and coordinate system WObj and jog the robot in the x, y, and z directions of the conveyor.

Verify that the x-direction is in the direction of positive motion of the conveyor.

© Copyright 2004-2025 ABB. All rights reserved.

5.9 Defining conveyor start window and sync separation

Start window

The start window is the length along the conveyor in which objects are tracked and are ready for connection. When a `WaitWObj` instruction is issued the system will connect to the first object inside the start window or wait otherwise.

If an object goes beyond the start window then it is no longer tracked and it is not available for connection. Such objects are automatically skipped. The purpose of the start window is to provide a buffer of objects for speed variations of the conveyor. If an object is connected within the start window then it should be certain that the motion coordinated to the object can be completed before the working area limit or maximum distance is reached.

> **Note**
>
> It is recommended to configure a non zero start window, otherwise all objects will be skipped and no object will be available for connection (default value is 10 m).

Sync separation

The parameter *Sync Separation* is used to filter out unwanted sync signals from a synchronization switch. This parameter establishes a minimum distance that the conveyor must move after one sync signal before a new sync signal is accepted as a valid object.

Defining start window and sync separation (DSQC2000)

Sync separation is configured for each encoder directly on the tracking unit, see *Configuring the CTM with RobotStudio on page 63*.

The start window is configured on the robot controller for the conveyor work areas.

Use this procedure to define the start window.

1. Open the **Configuration Editor** and select the topic **Process**.
2. Select the type **Conveyor Ici**.
3. Select the parameter *StartWinWidth* and change the value.

Defining start window and sync separation (DSQC377B)

Use this procedure to define the start window and the sync separation on the FlexPendant.

1. On the ABB menu, tap **Control panel** and **Configuration** and select the topic **I/O**.
2. Tap type **Fieldbus Command**.
3. Select the parameters *StartWinWidth* and *SyncSeparation* and change values.
4. Tap **OK**.

See *Type Fieldbus Command (DSQC377 only) on page 100*.

© Copyright 2004-2025 ABB. All rights reserved.

5.10 Avoiding robot reach problems

Description

A strategy is required to avoid coordination of motion beyond the reach of the robot.

With the Conveyor Tracking option, it is possible to setup maximum and minimum distances of the conveyor, to simplify this task.

With the PickMaster 3 option, coordination of motion beyond the reach of the robot can be prevented with the instruction `UseReachableTargets`.

Maximum and minimum distances

It is possible to monitor the position of the conveyor and automatically drop any connected objects that move outside the maximum or minimum specified distance.

The purpose is to prevent coordination of motion beyond the work area of the robot for both forward and backward operation of the conveyor.

It is recommended to set a negative value of the parameter *minimum distance*, otherwise all objects will be dropped as soon as they are connected. To have a positive minimum value to enter the work area it is recommended to use the optional argument `\RelDist` with the `WaitWObj` instruction.

Defining maximum and minimum distances

Use this procedure to define the distances.

1. Open the **Configuration Editor** and select the topic **Process**.
2. Select the type **Conveyor systems**.
3. Select **CNV1**.
4. Select the parameters *maximum distance* and *minimum distance* and change the values.
5. Tap **OK**.

   If you are using DSQC377, proceed with the following procedure:
6. Tap **Back** and select the type **Can interface**.
7. Select **CAN1**.
8. Select the parameter *Supervise max_dist Off* and set the value to **No**.
9. Tap **OK**.

   If you are using DSQC2000, proceed with the following procedure:
10. Tap **Back** and select the type **Conveyor Ici**.
11. Select **ICI1**.
12. Select the parameter *Supervise max_dist Off* and set the value to **No**.
13. Tap **OK**.

See *Topic Process on page 101*.

© Copyright 2004-2025 ABB. All rights reserved.

5.11 Using a trigger output on the CTM

Description

The trigger output signals in the CTM are primarily intended to control image acquisition of cameras.

A trigger output can be operated in two ways, manual mode or auto mode. Auto mode is used when a fixed distance is required between consecutive images. Manual mode is used when image acquisition should be controlled by a signal, for example from a RAPID program.

The DO signal, *cXTrigAutoMode*, is used to switch modes, where the value 1 activates auto mode and 0 activates manual mode.

Manual mode

In manual mode, the DO signal, *cXTrigVis*, can be used to set or reset the trigger output, for example from a RAPID program.

Auto mode

In auto mode, the trigger output will be pulsed by the CTM at a selected frequency according to the encoder distance.

The supervised encoder (1, 2, 3, or 4) is selected by the GO signal, *cXTrigAutoEncNo*.

The distance interval (number of counts) is selected by the GO signal, *cXTrigAutoDist*.

The pulse length of the signal can be modified by configuring the CTM through RobotStudio, see *Configuring a sensor on page 56*.

PickMaster 3 Option

With the PickMaster 3 option, select *cXTrigVis* as the trigger signal in the PickMaster application, see *Application manual - PickMaster 3*. Auto mode selection, encoder selection, and distance interval is fully managed by PickMaster. The pulse length can be modified by configuring the CTM through RobotStudio, see *Configuring a sensor on page 56*.

© Copyright 2004-2025 ABB. All rights reserved.

5.12 Defining the robot adjustment speed

Adjusting the speed

When entering conveyor tracking, the robot must adjust its speed to the speed of the conveyor. The speed with which the robot catches up to the conveyor for the first motion is controlled by the parameter adjustment speed.

See *Type Conveyor systems on page 101* on how to derive a proper value for this parameter.

Defining the robot adjustment speed

Use this procedure to define the robot adjustment speed.

1. Open the **Configuration Editor** and select the topic **Process**.
2. Select the type **Conveyor systems** and select **CNV1**.
3. Select the parameter *adjustment speed* and change the values.

See *Type Conveyor systems on page 101*.

© Copyright 2004-2025 ABB. All rights reserved.

5.13 Additional adjustments

Description

There are more parameters that can be adjusted in the motion system.

Regulating CPU load and accuracy

The parameter *Path Resolution* specifies the period of the path planner in planning steps along the path (no units). Step calculations require lots of CPU time and if steps cannot be calculated in time to keep the robot on the path then error **50082 Deceleration Limit** may occur. As conveyor tracking increases the general CPU load then the parameter *Path Resolution* can be increased if this error occurs. See *Type Motion Planner on page 104*.

Defining the mechanical unit parameters

The mechanical unit parameters define the name used in RAPID, and the conditions for activation and deactivation.

These parameters can be changed to ensure activation of the conveyor. See *Type Mechanical Unit on page 104*.

Defining additional robot parameters

Some parameters in the type *Robot* (topic *Motion*) can need adjustments. See *Type Robot on page 104*.

© Copyright 2004-2025 ABB. All rights reserved.

5.14 Configuring a track motion to follow a conveyor

Track following a conveyor

If the robot is mounted on a track, and the track is parallel to the conveyor, then the motion can be configured so that the track follows the conveyor. The robot and the track must be configured for *coordinated track motion*. See *Operating manual - IRC5 with FlexPendant* for information on configuring coordinated motion.

Once the robot and track are configured for coordinated motion, then conveyor tracking will automatically use the track to follow the conveyor. The track will maintain the same position relative to the object as the object moves on the conveyor as it was during programming.

The track and robot base frame must be defined so that positive motion of the track is in the same direction as the conveyor. In some installations this may require a re-definition of the track's direction of positive motion and calibration position.

Example configuration of track and conveyor directions

The following figure shows an example configuration.

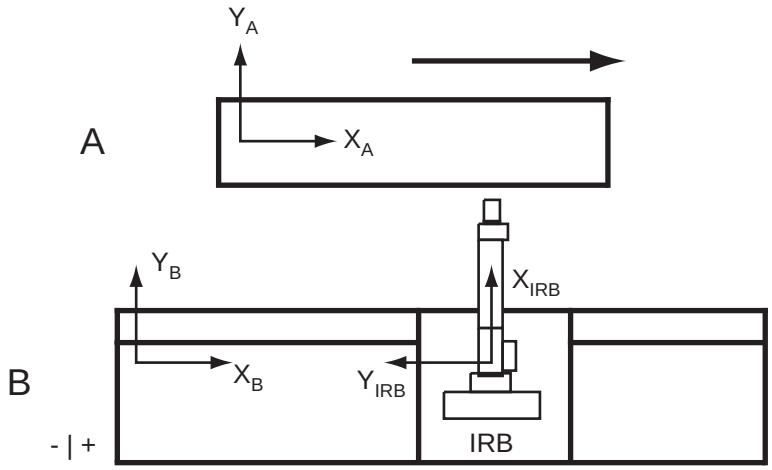

xx1200001099

A	Conveyor The arrow shows the direction of movement for the conveyor
B	Track motion The -|+ shows the direction of movement for the track
Conveyor quaternion	1, 0, 0, 0
Robot base quaternion	0.7071, 0, 0, 0.7071
Track base quaternion	1, 0, 0, 0

Recommendations for programming

Avoid moving the track when programming the conveyor coordinated instructions in the RAPID program. All motions of the track relative to the conveyor are saved and played back during conveyor tracking. Tracks typically have an acceleration ability that is far below that of the robot joints. If the track must move relative to

Continues on next page

© Copyright 2004-2025 ABB. All rights reserved.

the object then this will require an acceleration that will cause a reduction of the robot's TCP speed along the path in order to maintain coordination.

Tracking the conveyor with a robot instead of a track

If the robot base is not coordinated with the track axis, then the robot will do conveyor tracking without using the track. If the robot base frame is coordinated with the track, and conveyor tracking with the robot (instead of the track) is wanted, then change the parameter *Track Conveyor With Robot* in the type *Robot* (topic *Motion*). See *Type Robot on page 104*.

© Copyright 2004-2025 ABB. All rights reserved.

5.15 Installing conveyor tracking software

Installing conveyor tracking in an existing system (DSQC377)

Use this procedure to install the option *Conveyor tracking* in an existing system. Three configurations will be added:

- I/O for the DSQC377B
- System parameters for the conveyor in the topic *Process*
- System parameters for the mechanical unit in the topic *Motion*

The conveyor tracking software will automatically install an external I/O configuration for the DSQC377B on a virtual bus. Before the DSQC377B can be used the configuration needs to be changed so that the correct bus and address for the card is specified.

1. Connect the DSQC377B to the DeviceNet bus. Note the DeviceNet address on the unit.
2. In RobotStudio or FlexPendant, change the following system parameters:
   - Remove the flag *Simulated* from the board configuration. System parameter Simulated in the type *Industrial Network*.
   - Specify the correct address for the unit. System parameter *Address* in the type *Industrial Network*.
3. In RobotStudio or FlexPendant, open the **Configuration editor** and reload the calibration parameters. Load the original file cnv1_moc.cfg.
4. Restart the system.

   There should be no errors and the CNV1 mechanical unit should be available in the **Jogging** window on the FlexPendant.

Reloading saved *Motion* parameters

If the CNV1 mechanical unit does not appear on the FlexPendant then the *Motion* parameters must be reloaded manually in RobotStudio or the FlexPendant, from the IRC5 controller <system name>\PRODUCTS\RobotWare_6.XX.XXXX\options\cnv\cnv1_moc.cfg.

© Copyright 2004-2025 ABB. All rights reserved.

5.16 Installing additional conveyors work areas for conveyor tracking

Installing additional conveyor work areas for conveyor tracking

The option *Conveyor Tracking* installs one conveyor work area in the configuration (that is, in the system parameters). The PickMaster 3 option installs 0-6 conveyor work areas depending on the selected Conveyor Configuration. If additional conveyors work areas should be tracked with the same robot controller then the parameters for the additional conveyor work areas must be loaded manually. Up to 6 conveyor work areas can be installed on one controller.

For *Indexing Conveyor Control*, see *Installing the additional axis for servo control on page 157*.

For DSQC377 only

The second conveyor work area I/O configuration for the second DSQC377B will use address 11 by default. The third conveyor board will use address 12.

Installing additional conveyors work areas

Use this procedure to install additional conveyor work areas for conveyor tracking, for DSQC377:

1. Connect the second DSQC377B to the DeviceNet bus. Note the address on the DeviceNet bus.
2. In RobotStudio, load the files cnv2_eio, cnv2_prc, and cnv2_moc. (Repeat for additional conveyors work areas.)
3. Restart the system.
4. If needed, correct the address(es) for the Encoder2 to Encoder6 unit(s).

   The CNV1 to CNV6 mechanical units should now be available in the **Jogging** window on the FlexPendant.

Use this procedure to install additional conveyor work areas for conveyor tracking, for DSQC2000:

1. If the encoder is not connected to a preconfigured RobICI device, add a new RobICI device via RobotStudio, see *Configuring CTM in the robot controller on page 67*.

   Note

   Several conveyor work areas can share the same encoder interface on a DSQC2000, for example two robots picking objects from the same conveyor.

2. In RobotStudio, load the files cnvici2_eio.cfg, cnvici2_prc.cfg, and cnv2_moc.cfg. (Repeat for additional conveyors.)

   These files are found in the installation folder of Robotware, for example, C:\...\ABB\RobotWare\RobotWare_version\options\cnv.
3. Restart the system.
4. For each conveyor work area, define the correct DeviceMap for the I/O signals, see *Configuring a conveyor work area using CTM on page 68*.
5. Restart the system.

Continues on next page

© Copyright 2004-2025 ABB. All rights reserved.

The CNV1 to CNV6 mechanical units should now be available in the **Jogging** window of the FlexPendant.

© Copyright 2004-2025 ABB. All rights reserved.

6 Programming

6.1 Programming conveyor tracking

Prerequisites

To create a program that uses conveyor tracking and a conveyor coordinated work object, a work object must be present in the start window. An object must be moved into the start window. If there are several objects already on the conveyor, then it can be necessary to first clear the object queue and then move the conveyor.

Related information

If the conveyor is used with IRC5P (painting), see *Operating manual - IRC5P RW 6.0*.

© Copyright 2004-2025 ABB. All rights reserved.

6.2 Working with the object queue

I/O signals and the object queue

There are several I/O signals that allow a user or a RAPID program to monitor and control the object queue. The following table shows the I/O signals that impact the object queue.

I/O signal	Description
c1ObjectsInQ	Group input showing the number of objects in the object queue.
c1Rem1PObj	Remove first pending object from the object queue. Setting this signal will cause the first pending object to be dropped from the object queue. Pending objects are objects that are in the queue but are not connected to a work object. **Note** It takes some time for the signal to apply. After setting the signal, it is therefore advisable to wait for 0.15 s before a new work object is connected.
c1RemAllPObj	Remove all pending objects. Setting this signal will empty all objects from the object queue. If an object is connected, then it is not removed. **Note** It takes some time for the signal to apply. After setting the signal, it is therefore advisable to wait for 0.15 s before a new work object is connected.
c1DropWObj	Setting this signal will drop the tracked object and disconnect that object. The object is removed from the queue. This should not be set from RAPID, use a `DropWobj` instruction instead.

© Copyright 2004-2025 ABB. All rights reserved.

6.3 Activating the conveyor

Activation

As an additional axis and mechanical unit the conveyor must be activated before it can be used for work object coordination. The usual `ActUnit` instruction is used to activate the conveyor and `DeactUnit` can be used to deactivate the conveyor.

As an additional axis and mechanical unit the conveyor must be activated before it can be used for work object coordination. The usual `ActUnit` instruction is used to activate the conveyor and `DeactUnit` can be used to deactivate the conveyor.

By default, the conveyor is installed non-active on start. The conveyor can be configured to always be active at start. See *Type Mechanical Unit on page 104*.

Automatic connection on activation (DSQC377)

When a conveyor mechanical unit is activated, it first checks the state of the DSQC377B to see if the object was previously connected. If the DSQC377B, via the I/O signal *c1Connected*, indicates connection, then the object on the conveyor will automatically be connected on activation. The purpose of this feature is to automatically reconnect in case of a power failure with power backup on the DSQC377B.

Handling of the objects queue after activation (DSQC2000 only)

The object queue is handled by the controller only after the conveyor activation. It is not recommended to access any conveyor related IO signal or RAPID instruction before activating the conveyor.

© Copyright 2004-2025 ABB. All rights reserved.

6.4 Defining a conveyor coordinated work object

Settings for wobjcnv1

Use these settings to define a new conveyor coordinated work object, `wobjcnv1` (data type `wobjdata`).

Data	Data type	Description
`ufprog` (user frame programmed)	bool	Defines if a fixed user coordinate system is used. Set to FALSE for a movable user coordinate system, that is, coordinated to conveyor.
`ufmec` (user frame mechanical unit)	string	The conveyor mechanical unit with which the robot movements are coordinated. Specified with the name that is defined in the system parameters, for example CNV1.

For more information about data types, see *Technical reference manual - RAPID Instructions, Functions and Data types*.

For more information about defining work objects, see *Operating manual - IRC5 with FlexPendant*.

© Copyright 2004-2025 ABB. All rights reserved.

6.5 Waiting for a work object

Waiting for a work object

Motions that should be coordinated with the conveyor cannot be programmed until an object on the conveyor has been connected with a `WaitWObj` instruction.

If the object on the conveyor is already connected from a previous `WaitWObj` or if connection was established during activation, then execution of a second `WaitWObj` instruction will cause an error. This error can be handled in an error handler.

See *WaitWObj - Wait for work object on conveyor on page 107*.

© Copyright 2004-2025 ABB. All rights reserved.

6.6 Programming the conveyor coordinated motion

Programming the conveyor

1. Create a program with the following instructions:
```
ActUnit CNV1;
ConfL/Off;
MoveL waitp, v1000, fine, tool;
WaitWObj wobjcnv1;
```
2. Single-step the program past the `WaitWObj` instruction.

   If there is an object already in the start window on the conveyor then the instruction will return, else execution will stop while waiting for an object on the conveyor.
3. Run the conveyor until a work object is created.

   The program exits the `WaitWObj` and is now connected to the object. Stop the conveyor with the object in an accessible position on the workspace.
4. Program the `MoveL`, `MoveC`, `PaintL`, or `PaintC` instructions using the *wobjcnv1* conveyor coordinated work object.
5. End the coordinated motion with a fixed-frame work object (not coordinated to the conveyor). Note that this is the only way to end the use of the work object.
6. Add a `DropWObj wobjcnv1;` instruction.
7. If this is the end of the program, or the conveyor is no longer needed, then add a `DeactUnit CNV1;` instruction.

> **Note**
>
> In the case of CTM (DSQC2000 only) it is recommended to leave the conveyor active to avoid missing objects.

Example

The following program shows an example for a conveyor tracking program.
```
ConfL\Off;
MoveJ p0, vmax, fine, tool1;
ActUnit CNV1;
WaitWObj wobjcnv1;
MoveL p10, v1000, z1, tool1\Wobj:=wobjcnv1;
MoveL p20, v1000, z1, tool1\Wobj:=wobjcnv1;
MoveL p30, v500, z20, tool1\Wobj:=wobjcnv1;
MoveL p40, v500, fine, tool1;
DropWObj wobjcnv1;
MoveL p0, v500, fine;
DeactUnit CNV1;
```


© Copyright 2004-2025 ABB. All rights reserved.

6.7 Dropping a work object

Introduction

A connected work object can be dropped once conveyor coordinated motion has ended. Make sure that the robot motion is no longer using the conveyor positions when the work object is dropped. If motion still requires the positions then a stop will occur when the object is dropped.

It is not necessary to be connected in order to execute a `DropWObj` instruction. No error will be returned if there was no connected object.

Finepoints

Conveyor coordinated motion does not end in a finepoint. As long as the work object is coordinated to the conveyor, the robot motion will be coupled to the conveyor even in a finepoint. A fixed-frame or non-conveyor work object must be used in a motion instruction before dropping the conveyor work object.

Corner zones

Take care when ending coordination in a corner zone and executing the `DropWObj` instruction as the work object will be dropped before the robot has left the corner zone and the motion still requires the conveyor coordinated work object.

© Copyright 2004-2025 ABB. All rights reserved.

6.8 Entering and exiting conveyor tracking motion in corner zones

Enter and exit coordinated motion

Once a `WaitWObj` instruction has connected to a work object on the conveyor then it is possible to enter and exit coordinated motion with the conveyor via corner zones.

Example

```
MoveL p10, v1000, fine, tool1;
WaitWObj wobjcnv1
! enter coordination in zone
MoveL p20, v1000, z50, tool1;
MoveL p30, v500, z1, tool1\Wobj:=wobjcnv1;
MoveL p40, v500, z1, tool1\Wobj:=wobjcnv1;
MoveL p50, v500, z20, tool1\Wobj:=wobjcnv1;
MoveL p60, v1000, z50, tool1;
! exit coordination in zone
MoveL p70, v500, fine, tool1;
DropWObj wobjcnv1;
MoveL p10, v500, fine, tool1;
```

The move instruction ending coordination must be a fixed work object, for example ufprog is TRUE.

Take care when exiting coordination in a corner zone and executing a `DropWObj` instruction.

The following example shows an incorrect method for ending coordination in corner zones:

```
...
MoveL p50, v500, z20, tool1\Wobj:=wobjcnv1;
MoveL p60, v1000, z50, tool1;
! exit coordination in zone
DropWObj wobjcnv1;
```

This will cause an error, because the work object is dropped while robot is still in corner zone.

© Copyright 2004-2025 ABB. All rights reserved.

6.9 Information on FlexPendant

Available information on the FlexPendant

Information	Available in window
The conveyor position and speed The conveyor position is displayed in meters, and the conveyor speed in m/s. The speed will be 0 m/s until an object has passed the synchronization switch.	**Jogging**
The position in millimeters of the conveyor object This value will be negative if a Queue Tracking Distance is defined. When an object passes the synchronization switch then the position will be automatically updated.	**Jogging**
All signals that are defined for conveyor tracking	**I/O**

© Copyright 2004-2025 ABB. All rights reserved.

6.10 Programming considerations

Performance limits

Conveyor tracking will be lost if joint speed limits are reached, particularly in singularities. Ensure that the path during tracking does not exceed the acceleration, speed, and motion capabilities of the robot.

Motion commands

Only linear and circular motion instructions are allowed for conveyor tracking, that is `MoveL` and `MoveC`.

Do not start tracking with a `MoveC` instruction as the resulting circle diameter will depend on the conveyor position. Always start tracking with a `MoveL`.

Finepoints

Finepoints are allowed during conveyor tracking. The robot will hold the TCP still relative to the conveyor and RAPID execution will continue, see *Finepoint programming on page 97*.

ConfL

The RAPID instruction `ConfL\Off` must be executed before coordination with the conveyor. The purpose is to avoid configuration errors that would otherwise occur as the robot changes configuration during conveyor tracking.

Other RAPID limitations

The instructions `StorePath` and `RestoPath` do not function during conveyor tracking.

A `Search` instruction will stop the robot when hit or if the search fails. Make the search in the same direction as the conveyor moves and after the search stops continue with a move to a safe position. Use an error handler to move to a safe position if the search fails.

`EoffsSet`, `EoffsOn`, and `EoffsOff` have no effect for the conveyor additional axis, but can affect conveyor tracking with coordinated track. They also have effect on the sensor taught position.

Power fail restart is not possible with the synchronization option.

It is possible to use worldzone in conveyor tracking but during tracking the robot may move outside worldzone borders due to the position adjustment at servo level. Hence, taking margin is recommended when defining the worldzone.

© Copyright 2004-2025 ABB. All rights reserved.

6.11 Finepoint programming

Example with SetDO

While tracking the conveyor it is possible to use a finepoint. The following program example shows how motion may be stopped with respect to the conveyor so that an I/O signal may be set:

```
WaitWObj wobjcnv1
MoveL p1, v500, z20, tool1\Wobj:=wobjcnv1;
MoveL p2, v500, fine, tool1\Wobj:=wobjcnv1;
SetDO release_gripper;
WaitTime 0.1;
MoveL p3, v500, z20, tool1\Wobj:=wobjcnv1;
MoveL p4, v500, fine, tool1;
DropWObj wobjcnv1;
```

In the above example the `SetDO` will be executed after the robot arrives at p2. The robot will then track the conveyor for 0.1 seconds while the `WaitTime` instruction is executed. It will then move to p3 and on to p4 via a corner zone before ending coordination with a fixed work object (`wobj0` in this case).

Example with stoppointdata

Finepoints can also be programed with `stoppointdata`. To make the robot follow the conveyor during 0.1 second, the following program can used.

```
VAR stoppointdata followtime:=[3,FALSE,[0,0,0,0],0,0.1, "",0,0];
WaitWObj wobjcnv1MoveL p1, v500, z20, tool1\Wobj:=wobjcnv1;
MoveL p2,v500,z1\Inpos:=followtime,tool1\WObj:=wobjcnv1;
SetDO release_gripper;
MoveL p3, v500, z20, tool1\Wobj:=wobjcnv1;
MoveL p4, v500, fine, tool1;
DropWObj wobjcnv1;
```

For coordinated movements the `\Inpos` event will not occur for instructions `Break` and `WaitTime`. Instead, use the data type `stoppointdata`.

© Copyright 2004-2025 ABB. All rights reserved.

6.12 Operating modes

Operation in manual reduced speed mode (<250 mm/s)

When the conveyor is not moving, then the forward and backward hard buttons on the FlexPendant can be used to step through the program. New instructions can be added and programmed positions can be modified (ModPos).

To simplify programming, the conveyor may be moved to new positions between instructions. The robot will return to the correct position when forward or backward button is pressed.

The robot will recover as normal if the enabling device is released during motion.

The robot cannot perform coordinated motions to the conveyor while in manual reduced speed mode and the conveyor is moving.

Operation in automatic mode

Once a `WaitWObj` instruction has been executed, then it is no longer possible to step through the program with forward and backward hard buttons while the conveyor is moving.

Action	Description
Start and stop	The robot will stop and no longer track the conveyor if the stop button is pressed, or a `Break` or `StopMove` instruction is executed, between the `WaitWObj` and `DropWObj` instructions. The conveyor coordinated work object will not be lost but if the conveyor is moving then the object will quickly move out of the working area. Restart from the current instruction is not possible and the program must be restarted from the Main routine or with a `WaitWObj` instruction.
Emergency stop	When the emergency stop is pressed the robot will stop immediately. If the program was stopped and restarted after a `WaitWObj` then the coordinated work object will not be lost, but if the conveyor is moving then the object will quickly move out of the working area. It is not possible to restart from the current instruction and the program must be restarted either from the Main routine or with a `WaitWObj` instruction.

Operation in manual full speed mode (100%)

Operation in manual mode (100%) is similar to operation in automatic mode. The program can be run by pressing and holding the start button, but once a `WaitWObj` instruction has been executed then it is no longer possible to step through the program with the forward and backward buttons while the conveyor is moving.

Action	Description
Stop and restart	When the start button is released, or emergency stop is pressed, the robot will stop immediately. If the program was stopped after a `WaitWObj` then the coordinated work object will not be lost but if the conveyor is moving then the object will quickly move out of the working area. It is not possible to restart from the current instruction and the program must be restarted either from the Main routine or with a `WaitWObj` instruction.

© Copyright 2004-2025 ABB. All rights reserved.

7 System parameters

7.1 Introduction

About system parameters

This chapter describes system parameters used for all conveyor tracking options. Some parameters that are specific for only one option are presented in procedure context if they need to be changed.

All basic system parameters and the system parameter principles are listed in *Technical reference manual - System parameters*.

System parameters are modified using the **Configuration Editor** in RobotStudio or on the FlexPendant.

© Copyright 2004-2025 ABB. All rights reserved.

7.2 Topic I/O

Type Fieldbus Command (DSQC377 only)

The instance is named *Qtrack1*. See *Calibrating CountsPerMeter (DSQC377) on page 71*, and *Defining conveyor start window and sync separation on page 77*.

Parameter	Description
CountsPerMeter	Gives the number of quadrature pulses per meter of motion of the conveyor. Should be in the range of 5000-10000 for linear conveyors.
SyncSeparation	Sync signal separation (meters), this distance defines the minimum distance that the conveyor must move after a sync signal before a new sync signal is accepted as a valid object.
QueueTrckDist	The queue tracking distance (meters) defines the placement of the 0.0 meter point relative to the synchronization switch on the conveyor. All objects in this distance are tracked. The position returned for the object will be negative, relative to the 0.0 m point. All objects in this distance are tracked, but connection is not allowed until an object has passed 0.0 meters.
StartWinWidth	This distance defines the start window (meters). The start window defines the area that if a program starts using an object within the window, then all program coordination can end before the maximum distance or work area is reached. All objects within this window are tracked and are eligible for use in a coordinated work object. A `WaitWObj` instruction will connect to the first object in the window.
IIRFFP	Specifies the location of the real part of the poles in the left-half plane (in Hz). This is the break frequency for the speed filters in the encoder interface and regulates how hard the speed is filtered in the DSQC377B. For stop and go conveyors this parameter should be set between 10 and 15 Hz to have a good accuracy during stop and start.

© Copyright 2004-2025 ABB. All rights reserved.

7.3 Topic Process

Type Conveyor systems

The instance is named *CNV1*. See *Avoiding robot reach problems on page 78*, and *Defining the robot adjustment speed on page 80*.

Parameter	Description
Adjustment speed	The speed (in mm/s) at which the robot should catch up to the conveyor. The general recommended value is 130 % of the conveyor speed. As minimum, the value should be more than 100 % with some margin. If the robots speed is very fast compared to the conveyor speed, a further increase of the value is often necessary. If the value is set too low, robot movements may become jerky or the conveyor tracking accuracy may become reduced. On the other hand, if the value is set too high, the drive system may become overloaded, causing motion supervision errors. Generally, the maximum recommended value is 200 %. For IRB360 in applications with high robot speed, the maximum recommended value is 500 %.
minimum distance	The minimum distance (in millimeters) that a connected object can have before being automatically dropped. If an object is dropped during coordinated motion, then the motion is stopped and an error is produced. Note that if the minimum distance is set to a positive value, then all objects are dropped as soon as they are connected.
maximum distance	The maximum distance (in millimeters) that a connected object can have before being automatically dropped. If an object is dropped during coordinated motion, then the motion is stopped and an error is generated.
Stop ramp	The number of samples used to ramp down the correction when tracking is stopped. The default value of this parameter is 5, and this is a suitable setting for an IRB 360 with payload in the range 0-1 kg. For an IRB 360 with payload 1-8 kg, the value of this parameter should be increased to avoid vibrations and overload of the mechanical structure. A value of at least 10 should be chosen for a robot with 8 kg payload. When tracking with a track axis this parameter should be increased to 30. For a robot switching between conveyors increasing the stop ramp will increase the distance needed to reach accurate tracking on next conveyor. For example, for an IRB 360 10 steps of 12 ms at 5 m/s this means 0.6 meters.
Start ramp	The number of samples used to ramp up the correction when tracking is started. The default value of this parameter is 5, and this is a suitable setting for an IRB 360 with payload in the range 0-1 kg. For an IRB 360 with payload 1-8 kg, this parameter should be increased to avoid vibrations and overload of the mechanical structure. A value of at least 10 should be chosen for a robot with 8 kg payload. When tracking with a high speed conveyor this parameter can be increased. During the ramping the accuracy of tracking is not reached so be careful when increasing this parameter. For an IRB 360 the best choice is to use the default value (5) if the load is not higher than 1 kg. When switching between 2 conveyors with short distance between pick and place the use of time interpolation is the optimal solution. For example, put the robot in a wait position just above the pick conveyor with a very short distance to pick position. In this case a low speed or time interpolation should also be used.

Continues on next page

© Copyright 2004-2025 ABB. All rights reserved.

Parameter	Description
Adjustment accel	The maximum acceleration (in mm/s2) at which robot should catch up to the conveyor. By default no limitation. For big robots and heavy load or limited robot acceleration (like use of `AccSet` or `PathAccLim`) it can be necessary to set *Adjustment accel* according to the robot performances. With robot on track or trolley tracking with the track the performance of the track is automatically used. This parameter must be adjusted when the robot cannot continue its path but remains tracking the same position on the conveyor. For big robots like IRB 6600 *Adjustment accel* should be set around 1000 if conveyor speed is higher than 150 mm/s.
Speed filter length	The number of samples used for average filter of conveyor speed. Maximum value is 50. Default value 1, which equals no filter. Should be used only in case of high level of noise on conveyor speed and speed reduction on robot due to this noise.
Acc dependent filter	Specifies the acceleration dependent filter. Default value is 1 m/s^2. To value get good accuracy during acceleration this value should be set equal to the maximum acceleration of the conveyor. A low value means harder filtering. If there is a problem with noise this parameter should be reduced. If an IRB 360 is used for fast picking this parameter should be set to 0, this will turn off the filtering to improve the response times.
syncfilter ratio	Defines how fast the robot should adjust the speed to the conveyor speed. Default value is 0.8. For IRB 360 this can be reduced to 0.5 to improve the accuracy in fast pick and place applications with low payload (0-1 kg). A too low value might result in jerky movements.
Reach zone accuracy	A value from 0 to 100 that defines how accurately the release zone of the conveyor work area is modelled. The parameter will only affect *UseReachableTargets*. A lower value will reduce the CPU load but it will also decrease how well the release zone matches the robot reach. If the value is set too low, e.g. 0, *UseReachableTargets* will become disabled for use. **Note** The parameter value will not affect picking accuracy. It will only affect the geometry of the zone on the conveyor belt where targets are released for usage.

Type Conveyor Ici (DSQC2000)

Parameter	Description
CountsPerMeter	Gives the number of quadrature pulses per meter of motion of the conveyor. Should be in the range of 5000-10000 for linear conveyors.
QueueTrckDist	The queue tracking distance (meters) defines the placement of the 0.0 meter point relative to the synchronization switch on the conveyor. All objects in this distance are tracked. The position returned for the object will be negative, relative to the 0.0 m point. All objects in this distance are tracked, but connection is not allowed until an object has passed 0.0 meters.
StartWinWidth	This distance defines the start window (meters). The start window defines the area that if a program starts using an object within the window, then all program coordination can end before the maximum distance or work area is reached. All objects within this window are tracked and are eligible for use in a coordinated work object. A `WaitWObj` instruction will connect to the first object in the window.

Continues on next page

© Copyright 2004-2025 ABB. All rights reserved.

Parameter	Description
PosUpdateTime	Defines how often the system reads the speed and position of the conveyor from the I/O system.

Type Conveyor Internal

The instance is named *INTERNAL1*.

Parameter	Description
Eio unit name	Name of the simulated I/O unit.
Connected signal	Name of the digital input signal for connection.
Position signal	Name of the analog input signal for conveyor position.
Velocity signal	Name of the analog input signal for conveyor speed.
Null_speed signal	Name of the digital input signal indicating zero speed on the conveyor.
DropWObj signal	Name of the digital output signal to drop a connected object.
ObjLost signal	Name of the digital input signal to indicate that an object has gone past the start window without being connected.
RemAllPObj sig	Name of the digital input signal to remove all Pobj.
Rem1PObj sig	Name of the digital input signal to remove one Pobj.
Pos Update time	Defines how often position and velocity output signals are updated.
Supervise max_dist Off	Boolean to remove supervision of maximum and minimum distance. Default value is YES.
New object strobe	Name of digital output signal showing a new object in queue.
Objects in queue	Name of group output signal showing the number of objects in queue.
Count1 from encoder	Name of group output for new object position low word.
Count2 from encoder	Name of group output for new object position high word.
Single to track	Name of the single that is moving the indexing conveyor. (*Indexing Conveyor Control*.)

© Copyright 2004-2025 ABB. All rights reserved.

7.4 Topic Motion

Type Mechanical Unit

The instance is named *CNV1*. See *Defining the mechanical unit parameters on page 81*, and *Activating the conveyor on page 89*.

Parameter	Description
Name	The name of the unit, usually *CNV1*, *CNV2* etc. This name is used in the **Jogging** window and from the program, for example when a unit should be activated.
Activate at Start-tup	Defines if the conveyor should be activated automatically at start. **Note** This parameter should not be used when combining synchronized and un-synchronized mode, see *Combining synchronized and un-synchronized mode on page 189*.
Deactivation Forbidden	Defines if the conveyor is allowed to be deactivated.

Type Motion Planner

The instance is named *motion_planner*. See *Regulating CPU load and accuracy on page 81*.

Parameter	Description
Path Resolution	The parameter corresponds in some sense to the distance between two points in the path. Increasing path resolution means increasing the distance, which leads to a decrease in the resolution of the path.
Process Update Time	Determines how often the process path information is calculated.

Type Robot

The instance is named *ROB_1*, *ROB_2* etc. See *Additional adjustments on page 81*, and *Configuring a track motion to follow a conveyor on page 82*.

Parameter	Description
Corvec correction level	Defines how often corrections of robot positions are done. Default is 1. Increasing the value gives corrections more often. Should be set to 2 or 3 to get good accuracy during conveyor acceleration. For IRB 360 with high payloads (6-8 kg), for YuMi robots, and for big robots like IRB 6700, it should be set to 1.
Track Conveyor With Robot	If *Yes*, then the robot will track the conveyor without using the track axis even if robot is coordinated with the track. Default value is *No*.

Continues on next page

© Copyright 2004-2025 ABB. All rights reserved.

Parameter	Description
Max accel for conveyor tracking	This parameter should only be used when conveyor speed is higher than 600 mm/s, when the robot has to pick a part on the conveyor, and when increase of max_external_pos_adjustment and Stop_ramp is not an option. Defines the max acceleration allowed for the robot during conveyor tracking. The aim of this parameter is to reduce adjustment in servo task as big adjustment values can cause speed supervision errors or max_external pos adjustment error (50163). The drawback of too low acceleration is an increase of cycle time. Default value is 1 (limit not used), max value is 100 (m/s^2).
Max External Pos Adjustment	Defines the maximum position adjustment allowed in the servo task. Can be increased for big robots with heavy load and high conveyor speed if error 50163 occurs. First verify that *Adjustment speed* and *Adjustment accel* are correctly defined (see *Type Conveyor systems on page 101*). Default value 0.2, maximum 0.8, minimum 0.1. Defined in meters. If increased, *Start ramp* and *Stop ramp* should also be increased to 20 or 30 (see *Type Conveyor systems on page 101*).

Type Single

The instance is named *CNV1*. See *Calibrating the conveyor base frame on page 73*.

Parameter	Description
Base frame x Base frame y Base frame z	Defines the x, y, and z-direction of the base frame position in Base frame y relation to the world frame (in meters).
Base frame q1-q4	Defines the quaternions of the base frame orientation in relation to the world frame. That is, the orientation of the conveyor base coordinate system.

Type Single Type

The instance is named *CNV1*.

Parameter	Description
Mechanics	Defines what type of mechanics the single type uses.

Type Transmission

The instance is named *CNV1*.

Parameter	Description
Rotating Move	Defines if the conveyor is rotating (*Yes*) or linear (*No*).

© Copyright 2004-2025 ABB. All rights reserved.

This page is intentionally left blank

8 RAPID reference

8.1 Instructions

8.1.1 WaitWObj - Wait for work object on conveyor

Description

`WaitWObj` (*Wait Work Object*) connects to a work object in the start window on the conveyor mechanical unit.

Example

```
WaitWObj wobj_on_cnv1;
```

The program connects to the first object in the object queue that is within the start window on the conveyor. If there is no object in the start window then execution stops and waits for an object.

Arguments

```
WaitWObj WObj [\RelDist][\MaxTime][\TimeFlag]
```

`WObj`

Work Object

Data type: `wobjdata`

The moving work object (coordinate system) to which the robot position in the instruction is related. The mechanical unit conveyor is to be specified by the ufmec in the work object.

`[\RelDist]`

Relative Distance

Data type: `num`

Waits for an object to enter the start window and go beyond the distance specified by the argument. If the work object is already connected, then execution stops until the object passes the distance. If the object has already gone past the relative distance then execution continues.

`[\MaxTime]`

Maximum Time

Data type: `num`

The maximum period of waiting time permitted, expressed in seconds. If this time runs out before the sensor connection or relative distance is reached, the error handler will be called, if there is one, with the error code `ERR_WAIT_MAXTIME`. If there is no error handler, the execution will be stopped.

`[\TimeFlag]`

Timeout Flag

Data type: `bool`

Continues on next page

© Copyright 2004-2025 ABB. All rights reserved.

The output parameter that contains the value TRUE if the maximum permitted waiting time runs out before the sensor connection or relative distance is reached. If this parameter is included in the instruction, it is not considered to be an error if the maximum time runs out. This argument is ignored if the `MaxTime` argument is not included in the instruction.

Program execution

If there is no object in the start window then program execution stops. If an object is present, then the work object is connected to the conveyor and execution continues.

If a second `WaitWObj` instruction is issued while connected then an error is returned unless the `\RelDistoptional` argument is used.

More examples

Example 1

```
WaitWObj wobj_on_cnv1\RelDist:=500.0;
```

If not connected, then wait for the object to enter the start window and then wait for the object to pass the 500 mm point on the conveyor. If already connected to the object, then wait for the object to pass 500 mm.

Example 2

```
WaitWObj wobj_on_cnv1\RelDist:=0.0;
```

If not connected, then wait for an object in the start window. If already connected, then continue execution as the object has already gone past 0.0 mm.

Example 3

```
WaitWObj wobj_on_cnv1;
WaitWObj wobj_on_cnv1\RelDist:=0.0;
```

The first `WaitWObj` connects to the object in the start window. The second `WaitWObj` will return immediately if the object is still connected, but will wait for the next object if the previous object had moved past the maximum distance or was dropped.

Example 4

```
WaitWObj wobj_on_cnv1\RelDist:=500.0\MaxTime:=0.1\Timeflag:=flag1;
```

The `WaitWobj` will return immediately if the object has passed 500 mm but otherwise will wait 0.1 seconds for an object. If no object passes 500 mm during this 0.1 seconds the instruction will return with `flag1=TRUE`.

Limitations

20 is required to connect to the first object in the start window. Once connected, a second `WaitWObj` instruction with `\RelDist` optional argument will take only normal RAPID instruction execution time.

Error handling

If following errors occur during execution of the `WaitWobj` instruction, the system variable `ERRNO` will be set. These errors can then be handled in the error handler.

ERR_CNV_NOT_ACT	The conveyor is not activated.

Continues on next page

© Copyright 2004-2025 ABB. All rights reserved.

ERR_CNV_CONNECT	The `WaitWobj` instruction is already connected.
ERR_CNV_DROPPED	The object that the instruction `WaitWobj` was waiting for has been dropped by another task.
ERR_WAIT_MAXTIME	The object did not come in time and there is no `Timeflag`.
ERR_CNV_OBJ_LOST	The object has passed the `StartwindowWidth` without being connected.

Syntax

```
WaitWObj
  [ WObj ':=']< persistent (PERS) of wobjdata> ';'
  [ '\' RelDist ':=' < expression (IN) of num > ]
  [ '\' MaxTime ':=' <expression (IN) of num>]
  [ '\' TimeFlag ':=' <variable (VAR) of bool>] ';'
```

Related information

For information about	See
`DropWObj`	*DropWObj - Drop work object on conveyor on page 110*
The data types `wobjdata`, `num`, and `bool`	*Technical reference manual - RAPID Instructions, Functions and Data types*

© Copyright 2004-2025 ABB. All rights reserved.

8.1.2 DropWObj - Drop work object on conveyor

Description

`DropWObj` (*Drop Work Object*) is used to disconnect from the current object and the program is ready for the next.

Example

```
MoveL *, v1000, z10, tool, \WObj:=wobj_on_cnv1;
MoveL *, v1000, fine, tool, \WObj:=wobj0;
DropWObj wobj_on_cnv1;
MoveL *, v1000, z10, tool, \WObj:=wobj0;
```

Arguments

```
DropWObj WObj
```

`WObj`

Work Object

Data type: `wobjdata`

The moving work object (coordinate system) to which the robot position in the instruction is related. The mechanical unit conveyor is to be specified by the ufmec in the work object.

Program execution

Dropping the work object means that the object is not longer tracked. The object is removed from the object queue and cannot be recovered.

Limitations

If the instruction is issued while the robot is actively using the conveyor coordinated work object then the motion stops.

The instruction can be issued only after a fixed work object has been used in the preceding motion instructions with either a fine point or several (>1) corner zones.

Syntax

```
DropWObj
  [ WObj ':='] < persistent (PERS) of wobjdata> ';'
```

Related information

For information about	See
`WaitWObj`	*WaitWObj - Wait for work object on conveyor on page 107*
The data type `wobjdata`	*Technical reference manual - RAPID Instructions, Functions and Data types*

© Copyright 2004-2025 ABB. All rights reserved.

8.1.3 CnvPredictReach - High speed conveyors

Description

This section describes the module *CnvPredictReach* that is used to predict if the picking and placing positions are within the work area of the delta robot, when using high speed conveyors (speeds higher than 800 mm/s). This module can only be used for simple and repeatable picking and placing programs, it cannot be used with buffer or stop and go conveyors.

Example: Initialization of data structure

```
RECORD cnvpickeroptimdata
bool Tpumessage;
num firststeppredictionratio;
num maxfirststeppredictiontime;
num secondstepprediction ratio;
num maxsecondstepprediction time;
num maxfirstcycleprediction time;
bool wait_end_of_pp_movement;
string pickconveyor;
string placeconveyor;
ENDRECORD
```

Default value

```
TASK PERS cnvpickeroptimdata defaultcnvpickeroptimdata
     :=[FALSE,0.35,0.6,0.3,0.75,0.6,TRUE,"CNV1","CNV2"];
```

Example: Picking and placing

Initialization phase

```
InitCnvPredictReach
     Safepos,resettimearea,1,defaultcnvpickeroptimdata;
```

In the picking program example from Pickmaster you will need to add a call to checkpick and trigg to pickenter and pickexit.

```
PROC Pick(num Index)
IF Index > 0 THEN
WObjPick:=ItmSrcData{Index}.Wobj;
GetItmTgt ItmSrcData{Index}.ItemSource,PickTarget;
CheckPick PickTarget.RobTgt,PickAct1,WObjPick;
TriggL\Conc,RelTool(PickTarget.RobTgt,0,0,-ItmSrcData{Index}.OffsZ)
,MaxSpeed,ItmSrcData{Index}.VacuumAct1\T2:=pickenter,z20,PickAct1\WObj:=WObjPick;
TriggL\Conc,PickTarget.RobTgt,LowSpeed,ItmSrcData{Index}.SimAttach1,z5\
Inpos:=ItmSrcData{Index}.TrackPoint,PickAct1\WObj:=WObjPick;
GripLoad ItemLoad;
TriggL
     RelTool(PickTarget.RobTgt,0,0,-ItmSrcData{Index}.OffsZ),LowSpeed,
ItmSrcData{Index}.Ack\T2:=pickexit,z20,PickAct1\WObj:=WObjPick;
AccSet 100,100;
ELSE
ErrWrite "Missing item distribution", "Cannot pick because no item
     distribution contains current work area." \RL2:="Please check
     configuration";
```

Continues on next page

© Copyright 2004-2025 ABB. All rights reserved.

```
SafeStop;
ENDIF
ERROR
AckItmTgt ItmSrcData{Index}.ItemSource,PickTarget,FALSE\Skip:=TRUE;
GetItmTgt ItmSrcData{Index}.ItemSource,PickTarget;
RETRY;
ENDPROC
```

Example: Double picking or single placing

Initialization phase

```
InitCnvPredictReach
     Safepos,resettimearea,1,defaultcnvpickeroptimdata;
```

For example when using the Pickmaster template, for double picking and single placing.

```
LOCAL CONST string aiCnv1PosSigName:="c1Position";
LOCAL CONST string aiCnv2PosSigName:="c2Position";
LOCAL CONST string aiCnv3PosSigName:="c3Position";
LOCAL CONST string aiCnv4PosSigName:="c4Position";
LOCAL CONST string aiCnv5PosSigName:="c5Position";
LOCAL CONST string aiCnv6PosSigName:="c6Position";
LOCAL CONST string aiCnv1SpeedSigName:="c1Speed";
LOCAL CONST string aiCnv2SpeedSigName:="c2Speed";
LOCAL CONST string aiCnv3SpeedSigName:="c3Speed";
LOCAL CONST string aiCnv4SpeedSigName:="c4Speed";
LOCAL CONST string aiCnv5SpeedSigName:="c5Speed";
LOCAL CONST string aiCnv6SpeedSigName:="c6Speed";

LOCAL VAR signalai aiCnv1Position;
LOCAL VAR signalai aiCnv2Position;
LOCAL VAR signalai aiCnv3Position;
LOCAL VAR signalai aiCnv4Position;
LOCAL VAR signalai aiCnv5Position;
LOCAL VAR signalai aiCnv6Position;
LOCAL VAR signalai aiCnv1Speed;
LOCAL VAR signalai aiCnv2Speed;
LOCAL VAR signalai aiCnv3Speed;
LOCAL VAR signalai aiCnv4Speed;
LOCAL VAR signalai aiCnv5Speed;
LOCAL VAR signalai aiCnv6Speed;

PROC EnumerateWorkAreas()
VAR num PickNumber:=1;
VAR num PlaceNumber:=1;
VAR num OtherNumber:=1;

InitCnvPredictReach
     Safepos,resettimearea,1,defaultcnvpickeroptimdata;

FOR i FROM 1 TO MaxNoSources DO
IF (ItmSrcData{i}.Used) THEN
```

Continues on next page

© Copyright 2004-2025 ABB. All rights reserved.

```
IF (ItmSrcData{i}.SourceType = PICK_TYPE) THEN
PickWorkArea{PickNumber}:=i;
WObjPick:=ItmSrcData{i}.Wobj;
IF use_3areas THEN
InitPickArea 1,3,PickAct1 ,WObjPick,SafePos,FALSE;
ELSE
InitPickArea 1,2,PickAct1 ,WObjPick,SafePos,TRUE;
ENDIF
Incr PickNumber;
ELSEIF (ItmSrcData{i}.SourceType = PLACE_TYPE) THEN
PlaceWorkArea{PlaceNumber}:=i;
WObjPlace:=ItmSrcData{i}.Wobj;
InitPickArea 2,1,PickAct1 ,WObjPlace,SafePos,FALSE;
IF use_3areas THEN
InitPickArea 3,2,PickAct1 ,WObjPlace,SafePos,FALSE;
ENDIF
Incr PlaceNumber;
ELSE
OtherWorkArea{OtherNumber}:=i;
Incr OtherNumber;
ENDIF
InitIoaliasfromitmsrc i;
ENDIF
ENDFOR
ENDPROC

InitIoaliasfromitmsrc is simple alias definition for QuickAck
     function
PROC InitIoaliasfromitmsrc(num Index)
IF ItmSrcData{Index}.Wobj.ufmec = "CNV1" THEN
AliasIO aiCnv1PosSigName,aiCnv1Position;
AliasIO aiCnv1SpeedSigName,aiCnv1Speed;
ELSEIF ItmSrcData{Index}.Wobj.ufmec = "CNV2" THEN
AliasIO aiCnv2PosSigName,aiCnv2Position;
AliasIO aiCnv2SpeedSigName,aiCnv2Speed;
ELSEIF ItmSrcData{Index}.Wobj.ufmec = "CNV3" THEN
AliasIO aiCnv3PosSigName,aiCnv3Position;
AliasIO aiCnv3SpeedSigName,aiCnv3Speed;
ELSEIF ItmSrcData{Index}.Wobj.ufmec = "CNV4" THEN
AliasIO aiCnv4PosSigName,aiCnv4Position;
AliasIO aiCnv4SpeedSigName,aiCnv4Speed;
ELSEIF ItmSrcData{Index}.Wobj.ufmec = "CNV5" THEN
AliasIO aiCnv5PosSigName,aiCnv5Position;
AliasIO aiCnv5SpeedSigName,aiCnv5Speed;
ELSEIF ItmSrcData{Index}.Wobj.ufmec = "CNV6" THEN
AliasIO aiCnv6PosSigName,aiCnv6Position;
AliasIO aiCnv6SpeedSigName,aiCnv6Speed;
ENDIF
ENDPROC

!***********************************************************
```

Continues on next page

© Copyright 2004-2025 ABB. All rights reserved.

```
!
! Function IsQuickAckOk
!
! Checks if it's OK to make a fast acknowledge.
!
!***********************************************************
FUNC bool IsQuickAckOk(num Index)
VAR num CnvPos:=0;
VAR num DropDist:=0;
VAR num RealPos:=0;
VAR bool QuickAckOk:=FALSE;
VAR num SafeDist;

IF ItmSrcData{Index}.Wobj.ufmec = "" THEN
QuickAckOk:=TRUE;
ELSE
SafeDist:=200;
IF ItmSrcData{Index}.Wobj.ufmec = "CNV1" THEN
CnvPos:=aiCnv1Position*1000;
DropDist:=Cnv1DropDist;
SafeDist:=aiCnv1Speed*1000*0.35;
ELSEIF ItmSrcData{Index}.Wobj.ufmec = "CNV2" THEN
CnvPos:=aiCnv2Position*1000;
DropDist:=Cnv2DropDist;
SafeDist:=aiCnv2Speed*1000*0.35;
ELSEIF ItmSrcData{Index}.Wobj.ufmec = "CNV3" THEN
CnvPos:=aiCnv3Position*1000;
DropDist:=Cnv3DropDist;
SafeDist:=aiCnv3Speed*1000*0.35;
ELSEIF ItmSrcData{Index}.Wobj.ufmec = "CNV4" THEN
CnvPos:=aiCnv4Position*1000;
DropDist:=Cnv4DropDist;
SafeDist:=aiCnv4Speed*1000*0.35;
ELSEIF ItmSrcData{Index}.Wobj.ufmec = "CNV5" THEN
CnvPos:=aiCnv5Position*1000;
DropDist:=Cnv5DropDist;
ELSEIF ItmSrcData{Index}.Wobj.ufmec = "CNV6" THEN
CnvPos:=aiCnv6Position*1000;
DropDist:=Cnv6DropDist;
ENDIF
IF CnvPos < DropDist-SafeDist THEN
QuickAckOk:=TRUE;
ELSE
QuickAckOk:=FALSE;
ENDIF
ENDIF
RETURN QuickAckOk;
ENDFUNC

!***********************************************************
!
```

Continues on next page

© Copyright 2004-2025 ABB. All rights reserved.

```
! Function QuickAck
!
! Makes a quick acknowledge. Returns FALSE if is
! wasn't possible.
!
! Example:
! PROC Place(num Index)
! Coordinated;
! WObjPlace:=ItmSrcData{Index}.Wobj;
! GetItmTgt ItmSrcData{Index}.ItemSource,PlaceTarget;
! MoveL\Conc,RelTool(PlaceTarget.RobTgt,0,0,-ItmSrcData{Index}
.OffsZ),MaxSpeed,z20,Gripper\WObj:=WObjPlace;
!
     TriggL\Conc,PlaceTarget.RobTgt,LowSpeed,ItmSrcData{Index}.VacuumRev1\T2:=
ItmSrcData{Index}.VacuumOff1,z5\Inpos:=ItmSrcData{Index}.TrackPoint,Gripper\WObj:=WObjPlace;
! GripLoad load0;
! IF QuickAck(Index, PlaceTarget) THEN
! MoveL
     RelTool(PlaceTarget.RobTgt,0,0,-ItmSrcData{Index}.OffsZ),LowSpeed,
z20,Gripper\WObj:=WObjPlace;
! ELSE
! TriggL RelTool(PlaceTarget.RobTgt,0,0,-ItmSrcData{Index}.OffsZ)
,LowSpeed,ItmSrcData{Index}.Ack,z20,Gripper\WObj:=WObjPlace;
! ENDIF
! UnCoordinated;
! ENDPROC
!
!
!***********************************************************
FUNC bool QuickAck(num Index, itmtgt ItemTarget \switch Nack)
VAR bool QuickAckOk:=FALSE;
VAR bool AckNack:=TRUE;

IF Present(Nack) THEN
AckNack:=FALSE;
ENDIF
IF IsQuickAckOk(Index) THEN
AckItmTgt ItmSrcData{Index}.ItemSource,ItemTarget,AckNack;
QuickAckOk:=TRUE;
ENDIF
RETURN QuickAckOk;
ENDFUNC
```

Note

For CTM (DSQC2000 only), the signal definitions signalai must be replaced by signalao since the signals need to be configured as analog output.

© Copyright 2004-2025 ABB. All rights reserved.

This page is intentionally left blank

9 Advanced queue tracking

9.1 Introduction to advanced queue tracking

Introduction

When queue tracking mode is enabled in the conveyor I/O configuration, the job queue is external, which means it can be handled by the RAPID code. If the queue tracking mode is disabled, then the queue is handled internally.

Installation

For DSQC377, queue tracking is disabled by default in the conveyor I/O configuration, as the signal *c1PosInJobQ* is set to 0 (zero). To enable queue tracking, set *c1PosInJobQ* to 1.

System parameters

The following signals are used for advanced queue tracking and must be defined in the system parameters, topic *I/O*, type *Signal*.

I/O signal	Description
c1ObjectsInQ	Group input showing the number of objects in the object queue. These objects have passed the synchronization switch but have not gone outside the start window.
c1Rem1PObj	Remove first pending object from the object queue. Setting this signal will cause the first pending object to be dropped from the object queue. Pending objects are objects that are in the queue but are not connected to a work object. **Note** It takes some time for the signal to apply. After setting the signal, it is therefore advisable to wait for 0.15 s before a new work object is connected.
c1RemAllPObj	Remove all pending objects. Setting this signal will empty all objects from the object queue. If an object is connected, then it is not removed. **Note** It takes some time for the signal to apply. After setting the signal, it is therefore advisable to wait for 0.15 s before a new work object is connected.
c1DropWObj	Setting this signal will drop the tracked object and disconnect that object. The object is removed from the queue. This should not be set from RAPID, use the `DropWobj` instruction instead.
c1NewObjStrobe	This DO signal is pulsed when a new object is detected. For DSQC377, this is a DI signal.

Continues on next page

© Copyright 2004-2025 ABB. All rights reserved.

I/O signal	Description
c1CntFromEnc	This 32-bit GI signal indicates the location (counter value) of the latest detected object. The signal is updated at every object detection. For DSQC2000, the signal can only detect new values when the conveyor is moving. To create a new object when the conveyor is not moving it is required to pulse *cxNewObjStrobe*. A new object will be created at the current conveyor position. **Note** The 32-bit signal is now default, but the old 16-bit signals are still supported: c1CntFromEnc1 (low word) and c1CntFromEnc2 (high word).
c1CntToEncStr	Used in queue tracking mode. When this DO signal is pulsed, the object location that is specified by *c1CntToEnc* will be moved to the first position of the object queue. As a result, the next work object to be tracked will target this object location.
c1CntToEnc	Used in queue tracking mode. This 32-bit GO signal specifies a desired object location (counter value) that shall be tracked. For DSQC2000, the use of *cxCntToEnc* is not meant to add objects to the queue but only to select objects to be picked from the queue. Therefore, *cxObjectsInQ* is not incremented after a pulse of *cxCntToEncStr*. If the counter value set using *cxCntToEnc* does not match any existing object in the queue, the controller will connect to the first available object issuing the internal error *Invalid count_to_enc_strobe on cnv x*. Therefore, creating new objects at arbitrary counter positions is not supported. On the other hand, if the counter value selected using *cxCntToEnc* is valid and available for connection, the controller will automatically drop all the objects from the queue which are older than the selected object. To avoid automatic dropping, it is recommended to select the oldest object for connection and perform the pick/place operations using the relative offset to the connected object. **Note** For DSQC377, the 32-bit signal is default, but the old 16-bit signals are still supported: c1CntToEnc1 (low word) and c1CntToEnc2 (high word). For DSQC2000, c1CntToEnc1 and c1CntToEnc2 are not supported.
c1ScaleEncPuls	DI scaled-down encoder pulses. (DSQC377 only)
c1ForceJob	DO run this job even if the checkpoint should fail. (DSQC377 only)
c1PosInJobQ	DO: 0 = Queue tracking mode disabled, 1 = Queue tracking mode enabled. For DSQC2000, this signal has no effect.
c1PassedStWin	DI notifies the main computer that an object has passed out of the start window (object lost). If the main process is waiting in a `WaitWObj` instruction, the program pointer will be moved to the nearest error handler, so appropriate action can be taken, for example pop the job queue. (DSQC377 only)
c1EncSelected	DI: 0 = Encoder A selected, 1= Encoder B selected (DSQC377 only)
c1EncAFault	DI Encoder A Fault (DSQC377 only)
c1EncBFault	DI Encoder B Fault (DSQC377 only)
c1DirOfTravel	DI direction of travel (DSQC377 only)
c1Simulating	DI simulating mode (DSQC377 only)
c1PowerUp-Status	DI power up status: Counters have been lost (DSQC377 only)

Continues on next page

© Copyright 2004-2025 ABB. All rights reserved.

I/O signal	Description
c1SimMode	DO puts the conveyor work area in to simulation mode (DSQC377 only)
c1softSyncSig	DO soft-sync signal. Simulates Sync-input. (DSQC377 only)
c1softCheckSig	DO soft-checkpoint signal. Simulates checkpoint input. (DSQC377 only)
c1EncSelec	DO: • 0 = Encoder A selected • 1 = Encoder B selected (DSQC377 only)
c1SoftSync	DO signal that can be used to simulate the detection of a new virtual object. When the signal is pulsed, a new object with the current location (counter value) will enter the queue. **Note** For DSQC377, the signal name is *c1softSyncSig*.
c1PassStw	DO indicating that an object has passed out of the start window without being connected (object lost). If the RAPID program is waiting in a `WaitWobj` instruction, the program pointer will be moved to the nearest error handler. (DSQC2000 only)

RAPID

For DSQC2000, if two RAPID instructions `WaitWObj` and `DropWObj` needs to be executed subsequently (without any other instruction in between), it is recommended to use `WaitTime` of at least 10 ms before `DropWObj`, to allow the correct internal state change of the object queue inside the controller.

© Copyright 2004-2025 ABB. All rights reserved.

9.2 Working with the object queue

Signal values

The option *Conveyor Tracking* provides several I/O signals that allow a user or RAPID program to monitor and control the object queue. The table in *System parameters on page 117*, shows the I/O signals that impact the object queue. The counter values have to do with the queue tracking function. Positions detected on the encoder node are sent to the main computer to be stored in the job queue handled by the robot controller. Values are returned to the encoder when object is ready to be tracked.

Handling the object queue in RAPID

To handle the object queue in RAPID the program must store the counter value for each new object on the conveyor and write it to the conveyor board when the user wants to track this object.

The RAPID program needs the following elements:

```
SetDO c1PosInJobQ, 1;

! Connect a trap routine to the detection of new objects on the
     conveyor
CONNECT NewObj WITH NewObjOnConvey;
ISignalGI c1CntFromEnc, NewObj;

TRAP NewObjOnConvey
  ! A new object is detected; Read its position from input group
       signal
  ObjectPosition := GInputDnum(c1CntFromEnc);
  RETURN;
ENDTRAP

TRAP TrackNewObj
  ! To track a selected object, write its reference to output group
       signal
  SetGO c1CntToEnc, ObjectPosition;
  WaitTime 0.02;
  ! Activate the written reference
  PulseDO c1CntToEncStr;
  RETURN;
ENDTRAP
```

Scale enc pulse (DSQC377 only)

The *ScalingFactor* tells after how many counts the signal *c1ScaleEncPuls* should toggle. So the distance between scale encoder pulses = (*ScalingFactor* * 2)/*CountsPerMeter*

The maximum value of *ScalingFactor* is 25000. *ScalingFactor* and *CountsPerMeter* belong to the type *Fieldbus Command* in the topic *I/O* or the type *Conveyor Ici* in the topic *Process*. See *Type Fieldbus Command (DSQC377 only) on page 100*.

Continues on next page

© Copyright 2004-2025 ABB. All rights reserved.

Passed start window signal

In some applications it is important to know if an object has gone through the start window without being connected. The encoder interface allows the robot controller software to detect when an object has passed the start window without being connected and is thus lost. The detection of the lost object is done on the next `WaitWObj` instruction. The next `WaitWObj` instruction, following after an object has moved outside the start window, will return with the error `ERR_CNV_OBJ_LOST`. This error can be handled in the RAPID error handler.

A DO signal, *c1PassStw*, can be selected to indicate if an unconnected object is passing the start window. Go to system parameters, *Process* -> *Conveyor Ici* -> *ObjLost signal* and set it to *c1PassStw*. This signal will go high when an object has left the start window without being connected.

Note

For CTM (DSQC2000) the `ERR_CNV_OBJ_LOST` error is not supported. The object that has moved outside the start window without connection will be dropped and `WaitWObj` will connect to the next object in the queue. If enabled, the signal *ObjLost* will be pulsed.

Simulation mode

The simulated encoder starts when the simulation signal is set. The simulation encoder counts is set to the real encoder counts when the simulation signal is set.

If the simulation signal is reset the encoder value returns to real encoder position.

The simulation speed is defined with the parameter *SimulationVel* in the type *Signal*, in the topic *I/O*.

© Copyright 2004-2025 ABB. All rights reserved.

This page is intentionally left blank

10 Circular conveyor tracking

10.1 Introduction to circular conveyor tracking

Introduction

Circular conveyors can be tracked with the option *Conveyor Tracking*. The principle for configuring circular conveyor tracking is to define values in radians instead of meters. Then configure as described in *Installation on page 39*, and *Configuration and calibration on page 61*.

This chapter will where there are differences in the configuration compared to linear conveyors.

Example

The figure below shows an example of circular conveyor tracking with example units and distances.

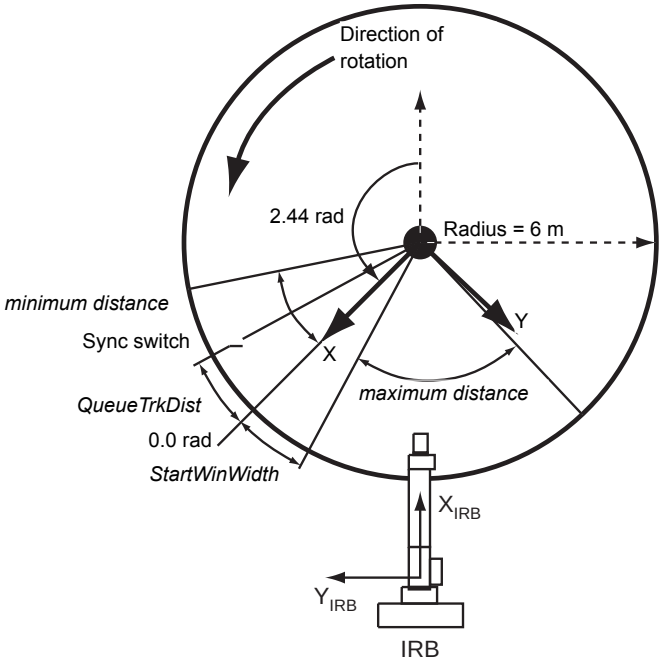

xx1200001101

CountsPerMeter	40000 counts per radian At 6 m radius, one count = 0.15 mm
minimum distance	-100 milliradians At 6 m radius, = -600 mm
Conveyor base frame	Base frame x = 8.0 m Base frame y = 0.0 m Base frame z = 0.0 m

Continues on next page

© Copyright 2004-2025 ABB. All rights reserved.

The x-axis is rotated 2.44 rad from the world X (X_{IRB})	Base frame q1 = 0.3420 Base frame q2 = 0.0000 Base frame q3 = 0.0000 Base frame q4 = 0.9397
SyncSeparation	0.005 rad At 6 m radius = 30 mm
QueueTrkDist	0.017 rad At 6 m radius = 100 mm
maximum distance	420 milliradians At 6 m radius = 2520 mm
StartWinWidth	0.017 rad At 6 m radius = 100 mm

© Copyright 2004-2025 ABB. All rights reserved.

10.2 Encoder type selection and location

Prerequisites

The goal in selecting an encoder for circular conveyor tracking is to have 0.1 mm to 0.2 mm resolution per count at the maximum radius of conveyor tracking.

Example

In the *Example on page 123*, following at a 6 meter radius in order to have 0.15 mm per count, we must have 40,000 counts per radian at the center of the table. The counts are quadrature encoded (four counts per pulse), thus the encoder must give 10,000 pulses per radian of circular conveyor movement. For a full revolution there are 2p radians per revolution, giving a requirement for 10000 × 2p = 62831.85 pulses per revolution of the circular conveyor.

Selecting gear ratio

If an encoder with 1000 pulses per revolution is selected, then we require a gear ratio of 1 to 62.83185 between the circular conveyor and the encoder shaft.

Note

The maximum value for *CountsPerMeter* in the encoder software is 50000. This should be considered when selecting gearing and encoder.

© Copyright 2004-2025 ABB. All rights reserved.

10.3 Installation and configuration

Software installation

The conveyor work area and conveyor tracking software are connected and installed in the same way as for linear conveyors.

Direction of positive motion from encoder

See the description for linear conveyors, *Direction of positive motion from the encoder (DSQC377 only) on page 70*.

Defining CountsPerMeter

The value of the parameter *CountsPerMeter* should be known from the selection of the encoder and the gear ratio between the circular conveyor and the encoder shaft. If the value is not known, then it is possible to measure the value following the same steps as outlined for a linear conveyor with extra equipment for measuring the change in angle of the conveyor between *position_1*, and *position_2*.

Defining the queue tracking distance

Before proceeding with conveyor setup and calibration it is necessary to define the desired queue tracking distance (*QueueTrckDist*). The queue tracking distance establishes the distance between the synchronization switch and the 0.0 rad point on the circular conveyor. The conveyor work area will keep track of all objects that have passed the synchronization switch but have not yet passed the 0.0 rad point.

Related information

Calibrating CountsPerMeter (DSQC377) on page 71

Calibrating CountsPerMeter (DSQC2000) on page 72

© Copyright 2004-2025 ABB. All rights reserved.

10.4 Additional motion settings

Conveyor start window and sync separation

For circular conveyor tracking these distances are defined in radians.

Conveyor maximum and minimum distances

Note

For circular conveyor tracking these distances are defined in milliradians.

Conveyor adjustment speed

The same as for linear conveyors.

Motion System parameters

The same as for linear conveyors.

Mechanical Unit parameters

The same as for linear conveyors.

Transmission and Single Type parameters

The motion configuration of the conveyor must be adjusted to account for a circular motion of the conveyor. There are two parameters that must be adjusted.

Parameter	Type	Description
Rotating Move	Transmission	Defines if the conveyor is rotating (*Yes*) or linear (*No*).
Mechanics	Single Type	Defines the mechanical structure of the conveyor. Select *EXT_ROT*.

© Copyright 2004-2025 ABB. All rights reserved.

10.5 Calibrating the conveyor base frame

Calibration options

The accuracy of the circular conveyor tracking depends on the accuracy in specifying the conveyor base frame. There are two methods to calibrate the base frame for a circular conveyor:

1. Enter the orientation and position of the base frame based on drawings of the robot installation and simple TCP measurements.
2. Use the robot TCP as a measuring tool and measure several points along the conveyor with some trigonometric calculations to calculate the conveyor base frame position and quaternion.

We recommend using the second method, with TCP as measuring tool. See *TCP measurement method on page 130*.

© Copyright 2004-2025 ABB. All rights reserved.

10.6 Manually calibrating the conveyor base frame

Orientation

The definition of the quaternion for conveyor orientation will also define the location of the 0.0 radian point on the circular conveyor. The direction of the x-axis will define the 0.0 radian point while the direction of the z-axis will define the direction of positive rotation using the right-hand-rule.

The graphic below shows two installations, one with clockwise rotation and the other with counterclockwise rotation and the corresponding quaternions. In cases where the 0.0 rad point is not an even multiple of 90° from the world frame, calculation of the conveyor orientation quaternion must be done using manual calculations of the quaternion. The TCP can be used to help make measurements, see *TCP measurement method on page 130*.

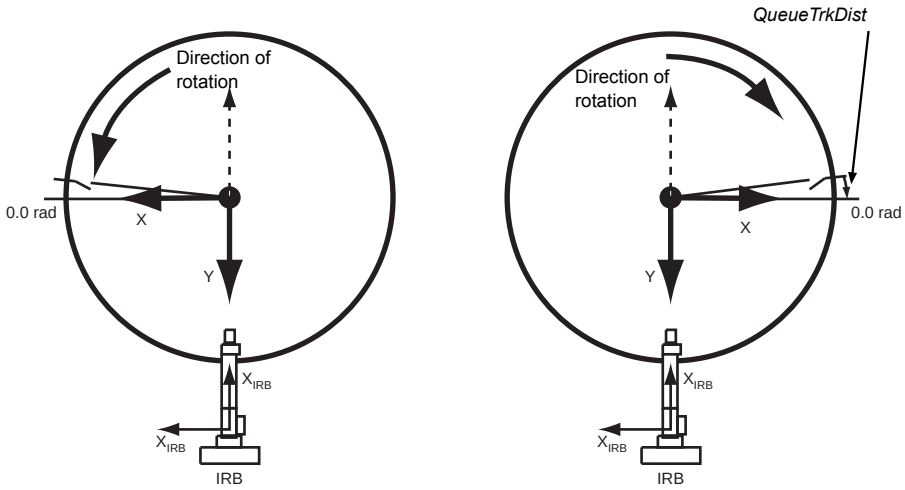

xx1200001102

Quaternion 0.7071, 0, 0, 0.7071	Quaternion 0, 0.7071, -0.7071, 0

Base frame position and start window start calibration

The conveyor base frame x, y, and z position must be specified relative to the world frame. This position must be calculated from the installation drawings or by using the robot as a measuring tool. Using the robot, one point can be marked on the edge of the circular conveyor and the TCP position is recorded for several points and the center point of the circle can be found. This is described in detail in the following section.

© Copyright 2004-2025 ABB. All rights reserved.

10.7 TCP measurement method

Recommendation

This section describes how to use TCP measurements and RAPID programs to calculate the conveyor base frame position and quaternion for a circular conveyor.

This method uses three measured points on the circular conveyor to calculate the center of rotation. The three points should be spaced as far apart as possible around the periphery.

Calculating the x and y positions for the base frame

Use this procedure to calculate the x and y positions for the base frame.

1. Use `Wobj0` on the FlexPendant. Pick out a reference point on the circular conveyor, jog the TCP to this point and record *p_0*.
2. Run the conveyor to another position. Jog the TCP to the reference point and record *p_1*.
3. Run the conveyor to a third position, jog the TCP to the reference point and record *p_2*.
4. Use the function `CNVUTL_cirCntr` with the points *p_0*, *p_1*, and *p_2*, to calculate the center of the circle, *p_centre*.

   The system module `cnv_utl` can be found in Robotware.
5. Take the x and y values from *p_centre* and enter them into the base frame values for the conveyor, converting to meters, see *Topic Motion on page 104*. These are shown in *Orientation on page 129*. The z value will be entered later, once the work object zero position has been chosen.

Defining the base frame orientation and start window start calibration

The base frame quaternion defines where the 0.0 rad point is for the robot motion.

The following figure shows an example of the angles that are used when defining the base frame orientation for the circular conveyor.

Continues on next page

© Copyright 2004-2025 ABB. All rights reserved.

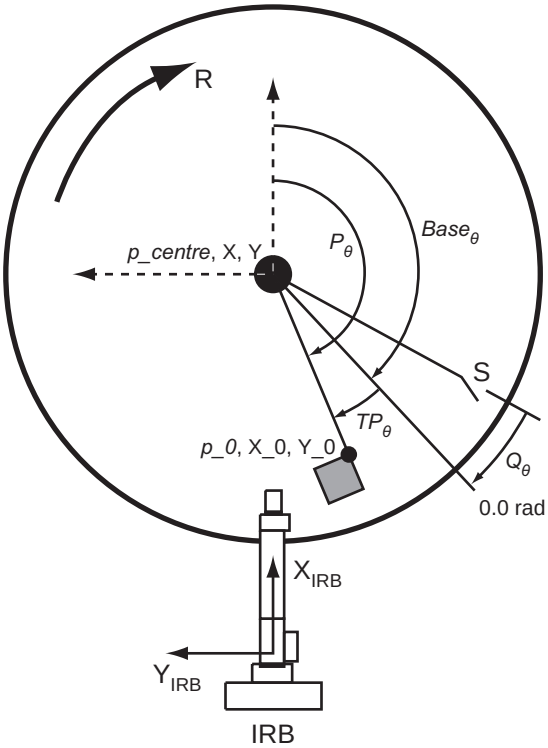

xx1200001103

R	Direction of rotation
S	Synchronization switch
Q_θ	Queue tracking distance angle
TP_θ	Angle shown on FlexPendant
P_θ	Angle calculated from p_0 position
$Base_\theta$	Base frame angle to be converted to a quaternion

Calculating the quaternion

Use this procedure to calculate the quaternion for the base frame orientation.

1. Define a temporary conveyor base frame quaternion as 1, 0, 0, 0.
2. Define a conveyor coordinated work object, *wobjcnv1*.
3. Step forward through a RAPID program containing the two instructions:
```
ActUnit CNV1;
WaitWObj wobjcnv1;
```
4. Run the conveyor until an object passes through the sync switch and beyond the queue tracking distance. The `WaitWObj` instruction will end execution. Stop the conveyor.
5. Using *wobjcnv1*, move the robot TCP to the desired zero position on the work object and record this point, *p_0*. Write down the *X_0*, *Y_0*, and *Z_0* coordinates of the point *p_0* as shown on the FlexPendant (*wobjcnv1* must be selected as work object).

Continues on next page

© Copyright 2004-2025 ABB. All rights reserved.

6 Write down the angle shown in the **Jogging** window for the *CNV1* conveyor.

This is angle TP_θ, see example measurement points in *Defining the base frame orientation and start window start calibration on page 130*.

7 Calculate P θ from the *X_0* and *Y_0* coordinates of *p_0* and the atan function. X_0 and Y_0 should both be positive when using the atan function. Check the value, it may be necessary to add 90 degrees:

$$P\theta = \text{atan}\left(\frac{|Y_0|}{|X_0|}\right)$$

8 Calculate the value of Base.

$$Base_\theta = P_\theta - TP_\theta$$

9 Calculate the quaternion for the base frame taking into account the direction of rotation:

Counter clockwise rotation:

```
q1 = cos(Base θ/2)
q2 = 0.0
q3 = 0.0

q4 = sin(Base θ/2)
```

Clockwise rotation:

```
q1 = 0.0

q2 = cos(Base θ/2)

q3 = -sin(Base θ/2)
q4 = 0.0
```

10 Enter the value for z (in meters) from *p_0*, and the values for the quaternions, *q1*, *q2*, *q3*, and *q4*, into the base frame for the conveyor, see *Topic Motion on page 104*.

© Copyright 2004-2025 ABB. All rights reserved.

11 Accelerating conveyors

11.1 Introduction to accelerating conveyors

Description

This section describes how to optimize the tracking performance of accelerating and decelerating conveyors for the option *Conveyor Tracking*. This might be needed for example if good accuracy is needed during start and stop of the conveyor. To get good accuracy during tracking of accelerating conveyors it is important that all system parameters in the system are defined correctly. This chapter describes the parameters that are important for accelerating and decelerating conveyors. See *System parameters on page 134*.

To further improve the accuracy it is possible to predict the speed change of the conveyor. This is done using a special RAPID function together with an I/O signal that is set just before the acceleration starts. See *Predicting speed changes on page 136*.

For indexing conveyors, see *Indexing conveyors on page 141*.

Prerequisites

The conveyor and encoder must be set up and calibrated correctly, see *Configuration and calibration on page 61*.

© Copyright 2004-2025 ABB. All rights reserved.

11.2 System parameters

Defining the system parameters

Use this procedure to define parameters that are important for an accelerating conveyor.

1. Set the speed filters.

   See *Speed filters on page 134*.
2. Change update rate of robot positions. See *Update rate of robot path on page 135*.
3. Verify the performance of the system.
4. DSQC377 only: If accuracy during acceleration still is not good enough, try changing the pollrate of the DSQC377 unit(s). See *Encoder pollrate for DSQC377B on page 135*.

Speed filters

The filter parameters need to be changed. For both the filters there is a trade off between noise reduction and accuracy during acceleration. To get good accuracy during acceleration the filter values should be set according to the recommendations below. If there is too much noise in the system this might lead to disturbances in the robot movement and then the filter parameters should be decreased until this disturbances disappear.

Parameter	Description
IIRFFP Type *Fieldbus Command*	Specifies the location of the real part of the poles in the left-half plane (in Hz). This is the break frequency for the speed filters in the DSQC377B and regulates how hard the speed is filtered. For accelerating conveyors this parameter should be defined to 10-15 Hz to have good accuracy during start and stop. This parameter should be changed for all DSQC377B units. The corresponding filter should be set for DSQC2000, according to the *Configuring an encoder on page 56* section.

Parameter	Description
Acc dependent filter Type *Conveyor Systems*	Specifies the setting of the acceleration dependent filter. Default value value is 1 m/s2. To get good accuracy during acceleration set it equal to the maximum acceleration of the conveyor. A low value gives harder filtering. If there is a problem with noise the value should be kept low. If IRB 360 is used for fast picking with low payload, this parameter should be set to 0. This will turn off the filtering to improve the response times.

Continues on next page

© Copyright 2004-2025 ABB. All rights reserved.

Update rate of robot path

It is possible to define how often the robot path should be updated due to new conveyor position.

Parameter	Description
Corvec correction level Type *Robot*	Defines how often corrections of robot path shall be done. Default is 1. Should be set to 2 or 3 in order to get good accuracy during acceleration. Set to 1 if the prediction of speed changes functionality is used, see *Predicting speed changes on page 136*. For IRB 360 with high payloads (6-8 kg), and for big robots like IRB 6600, it should be set to 1. Increasing it for big robots can lead to jerky movements.

Encoder pollrate for DSQC377B

This is information applies only to DSQC377B. The pollrate of the encoder unit defines how often the position and speed of the conveyor should be read, also known as cyclicity. A lower value (time) will make enable the robot to follow a speed change of the conveyor more accurately. However, a reduction of the pollrate will increase the load in the robot controller and on the DeviceNet bus. How much the pollrate can be reduced depends on the load of the system, for example number of robots, load in the I/O system, etc.

To change the pollrate, three system parameters must be changed.

Parameter	Description
Connection 1 Interval Type *Unit Type*	Defines the pollrate of the card. Default is 20 ms. The minimum value is 4 ms. A low value will give faster response on a conveyor speed change but also increase CPU load. We do not recommend a value lower than 10 ms. If more than one conveyor boards are used there is a risk that reducing pollrate value will create too high load on the DeviceNet bus. Therefore the default value is recommended. The instance is named *d377A*.
IIRFPeriod Type *Fieldbus Command*	Defines the period of the speed filter on the encoder unit, must be the same as *Connection 1 Interval* for d377A. This parameter should be changed for all units.
Pos Update Time Type *CAN Interface*	Defines how often the system reads the speed and position from the I/O system. For best performance it should be the same as *Connection 1 Interval*. It can be higher to reduce the system load. The instance is named *CAN1*.

© Copyright 2004-2025 ABB. All rights reserved.

11.3 Predicting speed changes

Introduction

It is possible to predict the speed change of a conveyor and use this prediction to improve the accuracy during tracking of an accelerating conveyor. The prediction is based on constant acceleration.

The prediction is setup from the RAPID instruction `UseAccProfile` and activated from an I/O signal. It is possible to have two independent profiles defined at the same time connected to two separate I/O signals. One could be used for starting and one for stopping the conveyor.

To access this RAPID instruction load the system module *Indexing_cnv* from the conveyor tracking option directory.

Setting up the signals

One or two I/O signals must be defined (one for each profile). These signals activates the prediction and should be set a predefined time before the speed change occurs.

First define the digital input I/O signals, see *Technical reference manual - System parameters*.

The names of the signals are used in the parameters *Sensor start signal* and *Sensor stop signal*. These parameters belong to the type *Conveyor systems* in the topic *Process*.

Parameter	Description
Sensor start signal	Name of the digital input signal to synchronize the prediction and the speed change. The signal must be set a predefined time before the speed change of the conveyor. How far ahead the signal should be set is configured in the RAPID instruction `UseAccProfile`.
Sensor stop signal	Name of the digital input signal to synchronize the prediction and the speed change. The signal must be set a predefined time before the speed change of the conveyor. How far ahead the signal should be set is configured in the RAPID instruction `UseAccProfile`.

The system parameters that affect the accuracy during acceleration are described in *System parameters on page 134*.

© Copyright 2004-2025 ABB. All rights reserved.

11.4 UseAccProfile - Use acceleration profile

Description

`UseAccProfile` is used to predict conveyor movement with constant acceleration or deceleration.

The profile uses either the acceleration for the conveyor or the time that it takes for the conveyor to accelerate or decelerate. If two profiles are defined, acceleration value needs to be used instead of a time value.

The prediction of the conveyor acceleration is started by setting the I/O signal configured in *Sensor start signal* or *Sensor stop signal*. For best result this signal must be set at least 150 ms before the conveyor is starting to accelerate or decelerate.

The settings for the acceleration can be changed during program execution.

Example

```
VAR intnum intno1;
VAR triggdata trigg1;
...
CONNECT intno1 With Acc_Dec;
TriggInt trigg1, 0.5\Time, intno1;

Resetset sensor_start_signal_DO;
UseACCProfile CNV1, 0.4, 0, 1\acc, \stop_sig;
SetDO STARTSTOP_CNV, 1;
TriggL p0, v20, trigg1, z10, tool1\Wobj:=wobjconv;
MoveJ p_start, v1000, fine, tool1;

TRAP Acc_Dec PulseDO \HIGH, sensor_start_signal_DO;
WaitTime 0.35;
SetDO STARTSTOP_CNV, 0;
ENDTRAP
```

In this example the start and stop of the conveyor is controlled by the I/O signal *STARTSTOP_CNV*. The deceleration profile is setup with a `trigger_time` of 0.4 s, end velocity of 0 m/s and the deceleration is 0.2 m/s^2. This means that the conveyor will decelerate from the current speed down to zero speed with a deceleration of 0.2 m/s^2 and that the sensor stop signal is going to be set 0.4 s before the conveyor is starting to decelerate.

The stop is triggered from a `TriggL` instruction.

As seen in the trap routine the *sensor_start_signal* is set 0.35 s before the stop order to the conveyor. However in the setup of the profile it is said that this signal is coming 0.4 s before the stop. In this case it might be that there is a delay in the communication with the conveyor controller of 0.05 s and this is compensated in this way.

Continues on next page

© Copyright 2004-2025 ABB. All rights reserved.

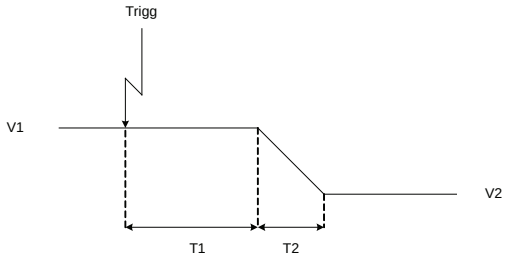

xx1200001104

In the preceding figure, the profile from the example is shown. *V1* is the speed before the deceleration and can in this case be for example 0.2 m/s. *V2* is the speed after deceleration, in this case it is 0 m/s. *T1* represents the time between the `Trigg` is coming and the conveyor is starting to decelerate, in this example 0.4 s. *T2* is the length, in time, of the deceleration.

Arguments

```
UseAccProfile MechUnit, Trigger_time, V_end, Acc_time[\acc | time],
     [\start_sig | stop_sig];
```

MechUnit

Mechanical Unit

Data type: `mechunit`

The moving mechanical unit object (coordinate system) to which the robot position in the instruction is related.

Trigger_time

Data type: `num`

The time between the *start_sensor_signal* is set and the time when the conveyor is starting to accelerate or decelerate. The time should not be smaller then 0.15 s. The value is given in seconds. In case of to small `Trigger_time` the profile might not be used.

V_end

Data type: `num`

Velocity to be reached at the end of acceleration or deceleration. In case of a stop this should be 0 m/s. The value is given in m/s.

Acc_time

Data type: `num`

Time from the start of the acceleration until the conveyor reaches the final speed (`V_end`). If `[\acc]` is set then this value is considered to be an acceleration value in m/s^2 describing the acceleration of the conveyor.

[\acc | time]

Data type: `switch`

Set to `acc` to use acceleration.

Set to `time` to use acceleration time.

Continues on next page

© Copyright 2004-2025 ABB. All rights reserved.

[\start_sig | stop_sig]

Data type: `switch`

Set to `start_sig` to use the signal configured as *Sensor start signal* to trigger the profile. Set to `stop_sig` to use the signal configured as *Sensor stop signal* to trigger the profile.

Program execution

To get the best possible accuracy during acceleration or deceleration it is important that the `Trigger_time` is the same as the time between setting the *Sensor start signal* and the time when the conveyor starts to accelerate or decelerate. The larger the difference is between these two times the poorer accuracy will be achieved.

If two profiles are configured in the system at the same time it is very important that the `\acc` option is used. This is to secure a good behavior when for example there is a mix between a start and a stop profile. This could happen when the conveyor for example is stopping and a start order is given so that the stop ramp never is finished.

Limitations

Before `UseAccProfile` is executed, the *Sensor start signal* and *Sensor stop signal* must be reset.

© Copyright 2004-2025 ABB. All rights reserved.

This page is intentionally left blank

12 Indexing conveyors

12.1 Description of indexing conveyor options

Indexing conveyors

An indexing conveyor advances in steps instead of running continuously. One step is one index, and one or several indexes creates the work object. The conveyor belt can have pockets or magazines for the products, which makes them perfectly aligned for picking.

There are two ways to track indexing conveyors. If the conveyor is not controlled by the ABB robot controller then recorded profiles must be used, see *Tracking indexing conveyors on page 142*. If the conveyor is controlled by the ABB robot controller the option *Internal Conveyor Control* should be used to get the best possible accuracy. See *Indexing conveyor with servo control (Indexing Conveyor Control) on page 155*.

© Copyright 2004-2025 ABB. All rights reserved.

12.2 Tracking indexing conveyors

12.2.1 Setting up tracking for an indexing conveyor

Introduction

This section describes how to track an indexing conveyor using the option *Conveyor Tracking*. As the conveyor is not controlled by the robot controller, is not possible to know exactly how the conveyor speed is changing. Instead, this method uses predicted speed changes. The repeatability is very important for the accuracy. Therefore, this method cannot be used if the conveyor movements are not repeatable. Then the option *Indexing Conveyor Control* with the conveyor controlled by the robot controller should be used.

To get good accuracy for indexing conveyors it must be possible to predict how the speed of the conveyor is changing. The prediction is based on a recorded profile of the conveyor during acceleration.

A new I/O signal must be defined and connected. RAPID instructions are used to handle prediction of conveyor position during speed changes.

Setting up tracking for an indexing conveyor

Use this procedure to set up tracking for an indexing conveyor.

1. Define a new I/O signal, topic *I/O*. See *Technical reference manual - System parameters*.
2. Connect the I/O signal to the conveyor system, topic *Process*. See *System parameters on page 143*.
3. Define speed filter parameter. See *System parameters on page 143*.
4. Record the profile. See *RecordProfile on page 145*.
5. Store the profile. See *StoreProfile on page 148*.
6. Load and/or activate the profile for production. See *LoadProfile on page 149*, and *ActivateProfile on page 150*.

© Copyright 2004-2025 ABB. All rights reserved.

12.2.2 System parameters

Topic I/O

This parameter belongs to the type *Fieldbus Command* in the topic *I/O*, for DSQC377. The corresponding filter should be set for DSQC2000, according to the *Configuring an encoder on page 56* section.

Parameter	Description
IIRFFP	Specifies the location of the real part of the poles in the left-half plane (in Hz). This is the break frequency for the speed filters in the DSQC377B and regulates how hard the speed is filtered. For indexing conveyors this parameter should be set between 10 and 15 Hz to have a good accuracy during stop and start.

Topic Process

This parameter belongs to the type *Conveyor systems* in the topic *Process*.

Parameter	Description
Sensor_start_signal	Name of the digital input signal to synchronize recorded profile and new index movement. The signal must be set before start of conveyor movement. For example when a cam to move the conveyor the sensor can be placed to be triggered 100 ms before conveyor moves.

© Copyright 2004-2025 ABB. All rights reserved.

12.2.3 Using indexing conveyor tracking from RAPID

Introduction

There are two ways to use the indexing conveyor tracking functionality from RAPID. One is to use the instruction `CnvGenInstr`, the other to use the predefined RAPID functions located in the RAPID module named *Indexing_cnv*. The RAPID instructions in *Indexing_cnv* encapsulates the functionality in `CnvGenInstr` to make it easier to use. To access these RAPID instructions, load the module *Indexing_cnv* from the conveyor tracking option directory.

© Copyright 2004-2025 ABB. All rights reserved.

12.2.4 RecordProfile

Description

`RecordProfile` resets all profile data and records a new profile of the conveyor movement as soon as the *sensor_start_signal* is set.

To be able to make a recording it is important that a connection to a work object is made before the recording is started. This means that a `WaitWobj` instruction has to be executed before the recording starts.

Example

```
ActUnit CNV1;
WaitWobj wobj_on_cnv1;
RecordProfile CNV1, 1, "index_profile";
WaitTime 0.2;
PulseDO \HIGH sensor_start_signal_DO;
SetDO STARTSTOP_CNV 1;
```

A profile of the conveyor is recorded as soon as the *sensor_start_signal* is set. In this example, the signal *STARTSTOP_CNV* starts the conveyor movement.

Arguments

```
RecordProfile MechUnit, Record_duration, Profile_type
```

MechUnit

Data type: `mechunit`

The moving mechanical unit object (coordinate system) to which the robot position in the instruction is related.

Record_duration

Duration of speed

Data type: `num`

Specifies the duration of record in seconds. Must be between 0.1 and *pos_update_time* * 300.

Profile_type

Type of profile

Data type: `string`

Value	Description
index_profile	Recording is started by *sensor_start_signal*.
start_stop_profile	A start and stop movement can be recorded. *sensor_start_signal* is used to record start movement and *sensor_stop_signal* is used to record *stop_movement*.
stop_start_profile	Same as for `start_stop_profile` but the *sensor_stop_signal* is used first.
stop_move_profile	The recording is started with *sensor_stop_signal*.

© Copyright 2004-2025 ABB. All rights reserved.

12.2.5 WaitAndRecProf

Description

`WaitAndRecProf` resets all profile data and records a new profile of the conveyor movement as soon as the *sensor_start_signal* is set.

This instruction does the same as the instruction `RecordProfile` but it also handles the connection to a work object on the conveyor. This instruction is intended for use in PickMaster where the instruction `WaitWobj` is not available.

Example

```
WaitAndRecProf CNV1, 1, "index_profile";
```

A profile of the conveyor is recorded as soon as the *sensor_start_signal* is set.

Program execution

Use this procedure to execute the instruction `WaitAndRecProf`.

Arguments

```
WaitAndRecProf MechUnit, Record_duration, Profile_type
```

MechUnit

Data type: `mechunit`

The moving mechanical unit object (coordinate system) to which the robot position in the instruction is related.

Record_duration

Duration of speed

Data type: `num`

Specifies the duration of record in seconds. Must be between 0.1 and *pos_update_time* * 300.

Profile_type

Type of profile

Data type: `string`

Value	Description
index_profile	Recording is started by *sensor_start_signal*.
start_stop_profile	A start and stop movement can be recorded. *sensor_start_signal* is used to record start movement and *sensor_stop_signal* is used to record *stop_movement*.
stop_start_profile	Same as for `start_and_stop_profile` but the *sensor_stop_signal* is used first.
stop_move_profile	The recording is started with *sensor_stop_signal*.

Continues on next page

© Copyright 2004-2025 ABB. All rights reserved.

Note

It is possible for the recording to fail and due to this no object gets created. As a result, the routine `WaitAndRecProf` is blocked in `waitwobj` with the message `Waiting for sync signal`. To simulate an object, use RAPID command `PulseDO \PLength:=0.1,c1SoftSyncSig;`. After recording the profile, it is recommended to store the file and verify it. The first column is time, the second column is position, and the third column is speed.

© Copyright 2004-2025 ABB. All rights reserved.

12.2.6 StoreProfile

Description

`StoreProfile` activates and saves a recorded profile in a file.

Example

```
ActUnit CNV1;
WaitWobj wobj_on_cnv1;
RecordProfile CNV1, 1, "index_profile";
WaitTime 0.2;
PulseDO \HIGH sensor_start_signal_DO;
SetDO STARTSTOP_CNV 1;
WaitTime 2;
SetDO STARTSTOP_CNV 0;
StoreProfile CNV1, 0, "Profile.log";
```

A profile of the conveyor movement is recorded as soon as the *sensor_start_signal* is set and is stored in file profile.log.

Arguments

```
StoreProfile MechUnit, Delay, Filename
```

MechUnit

Data type: `mechunit`

The moving mechanical unit object (coordinate system) to which the robot position in the instruction is related.

Delay

Data type: `num`

The delay in seconds can be used to shift the record in time. It must be between 0.01 and 0.1. If the value is 0 (zero) no delay is added. The delay is not saved in the profile, it is only used for the activation. If the delay should be used together with a saved profile the delay has to be specified again in the instruction `LoadProfile`.

Filename

Data type: `string`

Name of the file where the profile is stored.

© Copyright 2004-2025 ABB. All rights reserved.

12.2.7 LoadProfile

Description

`LoadProfile` loads a recorded profile from a file.

Example

```
LoadProfile CNV1, 0, "profile.log";
WaitTime 0.2;
PulseDO \HIGH sensor_start_signal_DO;
SetDO STARTSTOP_CNV 1;
!
! Work against the conveyor
!
SetDO STARTSTOP_CNV 0;
```

A saved profile of the conveyor movement is loaded and used for prediction of conveyor movement as soon as `sensor_start_signal` is set. Error warning `SYS_ERR_MOC_CNV_REC_FILE_UNKNOWN` if the file is not found.

Arguments

```
LoadProfile MechUnit, Delay, Filename
```

MechUnit

Data type: `mechunit`

The moving mechanical unit object (coordinate system) to which the robot position in the instruction is related.

Delay

Data type: `num`

The delay in seconds can be used to shift the record in time. It must be between 0.01 and 0.1. If the value is 0 (zero) no delay is added. The delay is not saved in the profile, it is only used for the activation.

Filename

Data type: `string`

Name of the file where the profile is stored.

© Copyright 2004-2025 ABB. All rights reserved.

12.2.8 ActivateProfile

Description

`ActivateProfile` activates a profile that was just recorded to use it without having to save it before.

If the system is restarted, all unsaved records are lost. Therefore, use `LoadProfile` after restarts.

Do not use `ActivateProfile` after `LoadProfile`.

Example

```
ActivateProfile CNV1, 0;
WaitTime 0.2;
PulseDO \HIGH sensor_start_signal_DO;
SetDO STARTSTOP_CNV 1;
!
! Work against the conveyor
!
SetDO STARTSTOP_CNV 0;
```

A profile of the conveyor is activated and used for prediction of conveyor movement as soon as the *sensor_start_signal* is set. Error warning `SYS_ERR_MOC_CNV_REC_NOT_READY` if record not finished.

Arguments

```
ActivateProfile MechUnit, Delay
```

MechUnit

Data type: `mechunit`

The moving mechanical unit object (coordinate system) to which the robot position in the instruction is related.

Delay

Data type: `num`

The delay in seconds can be used to shift the record in time. It must be between 0.01 and 0.1. If the value is 0 (zero) no delay is added.

© Copyright 2004-2025 ABB. All rights reserved.

12.2.9 DeactProfile

Description

`DeactProfile` deactivates a profile.

Example

```
DeactProfile CNV1;
```

A profile of the conveyor movement is deactivated and no longer used for prediction of conveyor movement.

Arguments

```
DeactProfile MechUnit
```

MechUnit

Data type: `mechunit`

The moving mechanical unit object (coordinate system) to which the robot position in the instruction is related.

© Copyright 2004-2025 ABB. All rights reserved.

12.2.10 CnvGenInstr

Description

`CnvGenInstr` sends a command to the conveyor process attached to the conveyor mechanical unit.

Example

```
CnvGenIstr CNV1, CNV_ACTIV_REC, mycnvdata;
```

The controller will activate the record.

Arguments

```
CnvGenInstr MechUnit, cnvcmd, Data
```

MechUnit

Data type: `mechunit`

The moving mechanical unit object (coordinate system) to which the robot position in the instruction is related.

cnvcmd

Command

Data type: `num`

List of possible commands:

- CNV_START_REC
- CNV_STOP_REC
- CNV_ACTIV_REC
- CNV_USE_FREC
- CNV_RESET_ALPROF
- CNV_DEACT_PROF
- CNV_STORE_PROF

Data

Data

Data type: `cnvgendata`

This structure is used to send `num` or `string` as parameters for different commands.

Program execution

All commands must be sent at least 0.2 seconds before start of conveyor movement.

More examples

Example1

```
VAR cnvgendata mycnvdata:=[0,0,0,0,"",""];
CnvGenInstr CNV2,CNV_START_REC,mycnvdata;
mycnvdata.value1:=1;
```

In this example, *data.value1* specifies the duration of recording in seconds. This value must be between 0.1 and *pos_update_time* * 300.

Continues on next page

© Copyright 2004-2025 ABB. All rights reserved.

Example 2

```
CnvGenInstr CNV2,CNV_STOP_REC,mycnvdata;
```

This example can be used if CNV_START_REC has been sent with duration 0.

Example 3

```
CnvGenInstr CNV2,CNV_ACTIV_REC,mycnvdata;
mycnvdata.value1:=0;
```

In this example, data.value1 specifies a delay added to record in seconds. This value must be between 0.01 and 0.1 seconds.

If value1=0 default value: then signal delay is used. Ready for use of profile on next index movement. Error warning SYS_ERR_MOC_CNV_REC_NOT_READY if record not finished.

Example 4

```
CnvGenInstr CNV2,CNV_USE_FREC,mycnvdata;
```

mycnvdata.string1:="myprofile": string1 must contain the name of the file where to read the recorded profile.

The file must have been created by the command CNV_STORE_PROF. Ready for use of profile on next index movement.

Error warning SYS_ERR_MOC_CNV_REC_FILE_UNKNOWN if record file not found.

Example 5

```
CnvGenInstr CNV2,CNV_RESET_ALPROF,mycnvdata;
```

Reset all profile data, ready for a new START_REC.

Example 6

```
CnvGenInstr CNV2,CNV_DEACT_PROF,mycnvdata;
```

Stop using profile.

Example 7

```
CnvGenInstr CNV2,CNV_STORE_PROF,mycnvdata;
```

mycnvdata.string1:="myprofile";string1 must contain the name of the file to store the profile.

Limitations

As access to files can take a lot of time it is recommended not to use CNV_USE_FREC and CNV_STORE_PROF while robot is moving.

Repeatability error between record and real cycles must be less than 120 ms. A delay between *sensor_start_signal* and conveyor movement must not vary more than 120 ms.

Error handling

No error handling for this instruction. In case of emergency stop of robot or conveyor the command CNV_DEACT_PROF should be used before restarting the robot.

Syntax

```
CnvGenInstr
  [ MechUnit ':=']< var of mechanical unit > ';'
  [ Command ':=']< expression (IN) of num> ';'
```

Continues on next page

© Copyright 2004-2025 ABB. All rights reserved.

```
[ Data ':=']< var of cnvgendata> ';'
```


© Copyright 2004-2025 ABB. All rights reserved.

12.3 Indexing conveyor with servo control (Indexing Conveyor Control)

12.3.1 Introduction to indexing conveyors with servo control

Description of *Indexing Conveyor Control*

The option *Indexing Conveyor Control* includes RAPID instructions and one RAPID data type. A typical installation includes an infeed conveyor transporting the products in a row at high speed to the indexing conveyor. A photo eye (sensor) mounted on the infeeder detects products and sends a trig signal to the robot controller. The controller starts the indexing movement after a specified time, that is, when the product has entered the pocket on the indexing conveyor. The FlexPicker picks the products from the indexing conveyor, even during indexing movement, and puts them in a box on the output conveyor.

The robot controller controls the FlexPicker and the indexing conveyor. The output conveyor and the infeeder have their own drive systems.

Conveyor tracking will be used both on the indexing conveyor and the output conveyor, but no encoder and encoder interface is needed on the indexing conveyor since the position and speed are known as a part of the path planning in the robot controller.

Note

The option *Indexing Conveyor Control* requires that the robot controller has additional drive units.

Continues on next page

© Copyright 2004-2025 ABB. All rights reserved.

Schematic overview

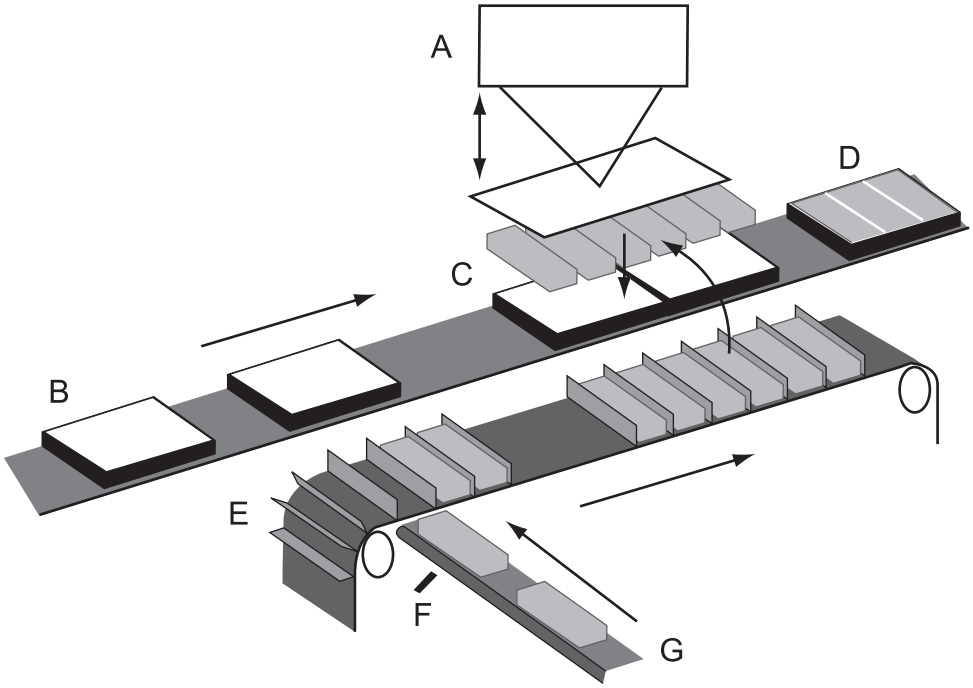

xx1000001425

A	Robot with gripper
B	Output conveyor with empty cartons, for example from carton erector
C	Robot picks products from indexing conveyor and places in cartons
D	Full cartons, for example to carton closer
E	Indexing conveyor with pockets
F	Photo eye
G	Product infeeder

Terminology

In context of controlling and moving the conveyor this is referred to as *M7* in this document.

In context of tracking the conveyor, it is referred to as *CNV1*. Hence, the conveyor will be configured as two different mechanical units, *M7* and *CNV1*.

Indexing mode is when the system listens (or waits) for a signal from the sensor that a product is available.

In indexing mode it is not possible to jog or use `Move` instructions. To disable indexing mode, execute `IndCnvReset` or move the program pointer to the routine Main (**PP to Main**).

Limitations

When using the option *Indexing Conveyor Control*, up to two indexing conveyors and two conventional (non-indexing) conveyors with encoder boards can be used per controller. Up to two IRB 360 robots can be configured in a MultiMove system.

© Copyright 2004-2025 ABB. All rights reserved.

12.3.2 Setting up a servo controlled indexing conveyor

Installing the additional axis for servo control

For the option *Indexing Conveyor Control*, the indexing conveyor should be running as an additional axis in the robot controller. See *Application manual - Additional axes and standalone controller*.

Installing the software

The conveyor tracking RAPID instructions, data types, and mechanical unit CNV1 are specified in the key string and do not need to be installed. If the system consists of more than one conveyor, three more files must be installed per conveyor. The files to install are stored on the controller.

The second conveyor to install is called CNV2 and the *Motion* configuration file is named cnv2_moc.cfg. The other two files to install for internally controlled conveyors are cnvint2_prc.cfg and cnvint2_eio.cfg.

© Copyright 2004-2025 ABB. All rights reserved.

12.3.3 System parameters and configuration files

Topic I/O

Type Unit

Verify that the I/O unit *Qtrack1* is defined as *Virtual* in the type *Unit*.

Parameter	Value
Connected To Bus	Virtual1

Type Unit Type

Verify that the I/O unit type used for the photo eye is defined as *Change of State*.

Parameter	Value
Connection 1 type	Change Of State (COS)

Type Signal

In the type *Signal*, configure a digital input signal for the photo eye which will trigger an indexing movement of the conveyor.

Parameter	Value
Name	DI_Eye
Type of Signal	Digital Input

Topic Controller

When running a MultiMove system and the indexing conveyor is running in a separate motion task, the following must be added.

Type Mechanical Unit Group

In the type *Mechanical Unit Group*.

Parameter	Value
Mechanical Unit Group	M7
Mech Unit 1	M7
Use Motionplanner	motion_planner_3

Type Tasks

In the type *Task*.

Parameter	Value
Use Mechanical Unit Group	M7

Type Motion System

In the type *Motion System*.

Parameter	Value
Name	motion_planner_3
dyn_ipol_type	1

Continues on next page

© Copyright 2004-2025 ABB. All rights reserved.

Note

Verify that the *motion_planner_3* has *dyn_ipol_type* defined as 1. To edit this parameter, create a backup and edit moc.cfg. This cannot be changed using RobotStudio.

Topic Process

Type Conveyor systems

In the type *Conveyor systems*, verify that the following parameters are set.

Parameter	Value
Syncfilter Ratio	0.0001
Acc Dependent Filter Value	0

Type Conveyor Internal

The instance is named *INTERNAL1*.

Parameter	Description
Eio unit name	Name of the simulated I/O unit.
Connected signal	Name of the digital input signal for connection.
Position signal	Name of the analog input signal for conveyor position.
Velocity signal	Name of the analog input signal for conveyor speed.
Null_speed signal	Name of the digital input signal indicating zero speed on the conveyor.
DropWObj signal	Name of the digital output signal to drop a connected object.
ObjLost signal	Name of the digital input signal to indicate that an object has gone past the start window without being connected.
RemAllPObj sig	Name of the digital input signal to remove all Pobj.
Rem1PObj sig	Name of the digital input signal to remove one Pobj.
Pos Update time	Defines how often position and velocity output signals are updated.
Supervise max_dist Off	Boolean to remove supervision of maximum and minimum distance. Default value is YES.
New object strobe	Name of digital output signal showing a new object in queue.
Objects in queue	Name of group output signal showing the number of objects in queue.
Count1 from encoder	Name of group output for new object position low word.
Count2 from encoder	Name of group output for new object position high word.
Single to track	Name of the single that is moving the indexing conveyor. (*Indexing Conveyor Control*.)

Continues on next page

© Copyright 2004-2025 ABB. All rights reserved.

Topic Motion

Type Arm

In the type *Arm*, enable *Independent Joint* and add joint limits.

Parameter	Value
Independent Joint	On
Independent Upper Joint Bound	2E+07
Independent Lower Joint Bound	-2E+07

Type Single Type

In the type *Single Type*, the parameter *Pocket size* defines the distance the conveyor will move when triggered by the photo eye (the size of one pocket), see the following graphic. It is very important for conveyor tracking accuracy that the pocket size is given correctly. Use measuring tape and measure at least ten pockets to have a an average for one pocket.

Time before indexing move defines the time from the photo eye is triggered until the conveyor movement starts. The recommended value is 0.3 (300 ms). Depending on the robot payload and deceleration distance, this value can be decreased (might be needed to increase for some applications). If it is important to use a value as small as possible, see *Minimizing trigger time on page 173*.

Parameter	Value
Mechanics	FREE_ROT
Indexing move	Yes
Time before indexing move	0.3
Pocket size	0.05

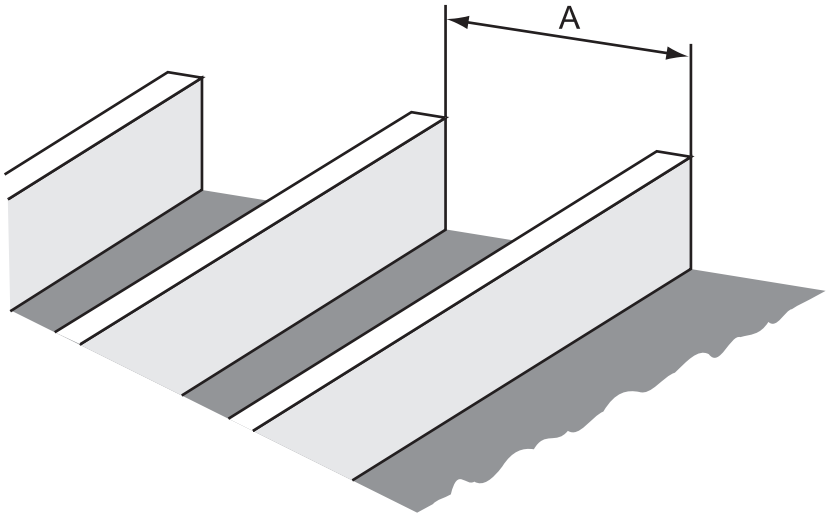

xx1200001105

A	Pocket size

Continues on next page

© Copyright 2004-2025 ABB. All rights reserved.

Type Transmission

The transmission must be represented by two integer parameters, *Transmission Gear High* and *Transmission Gear Low*. This is needed to avoid loosing accuracy after a very big number of indexing movements. These parameters are computed in a way that makes it possible for the controller to move the indexing conveyor exactly one pocket instead of for example 50 mm which could be the measured pocket size.

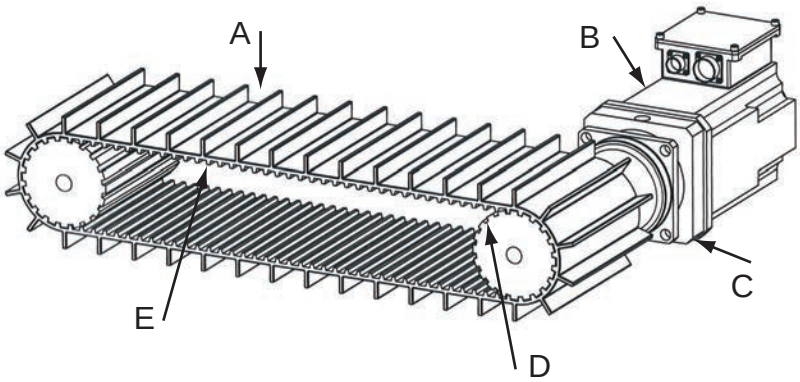

xx1200001106

A	Pockets
B	Motor
C	Gearbox
D	Gear wheel teeth
E	Belt teeth

See the following example for the calculation of the parameters *Transmission Gear High*, *Transmission Gear Low*, and *Transmission Gear Ratio*. With this setup, the parameter *Rotating Move* must be set.

Calculation example:

D = Number of gear wheel teeth

A = Number of pockets

Transmission Gear Low = D * A = 20 * 36 = 720

G = Gear box ratio

E = Number of belt teeth

Transmission Gear High = G * E * 360 = 10 * 108 * 360 = 388800

Transmission Gear Ratio = *Transmission Gear High* / *Transmission Gear Low* = 388800 / 720 = 540 / 1 = 540

In this example we use the gear box ratio 10, this means 10 motor revolutions correspond to one gear wheel revolution. The *Transmission Gear High* / *Transmission Gear Low* ratio can be given as 388800 / 720 but 540 / 1 is easier to comprehend.

Parameter	Value
Rotating move	YES

Continues on next page

© Copyright 2004-2025 ABB. All rights reserved.

Parameter	Value
Transmission Gear Ratio	540 (from example)
Transmission Gear High	540 (from example)
Transmission Gear Low	1 (from example)

To change the direction of movement of the axis, change sign of the transmission parameters *Transmission Gear Ratio* and *Transmission Gear High*.

Type Acceleration Data

For an indexing conveyor the acceleration data is given in m/s^2 even though the parameter *Rotating Move* is set. The indexing movement will be a symmetric triangular motion profile.

If different values are given for acceleration and deceleration, the smallest value will be used when creating the motion path.

To avoid vibrations and overload of the mechanical structure, the values for acceleration and deceleration should not be set higher than the robot capacity at the given payload.

Parameter	Value
Nominal Acceleration	25
Nominal Deceleration	25

© Copyright 2004-2025 ABB. All rights reserved.

12.3.4 Testing the indexing conveyor setup

Testing

Create a RAPID program using the code from the example below. Speed and acceleration are given in mm/s respectively mm/s^2. To avoid vibrations and overload of the mechanical structure, the values for acceleration and deceleration should not be set higher than the robot capacity at the given payload.

In this example an indexing movement will be performed each time the digital input signal *DI_Eye* is triggered.

RAPID example

```
MODULE MainModule
  VAR indcnvdata indcnvdata1:=[0,0,0,0,0,0,0];
  PROC main()
    indcnvdata1.speed := 2000;
    indcnvdata1.acceleration := 25000;
    indcnvdata1.productsperpick := 6;
    indcnvdata1.productsperindex := 1;

    ActUnit M7;
    IndCnvInit M7, DI_Eye, indcnvdata1;
    IndCnvEnable M7;

    WHILE TRUE DO
      WaitTime 1;
    ENDWHILE
  ENDPROC
ENDMODULE
```


© Copyright 2004-2025 ABB. All rights reserved.

12.3.5 Calibrating the base frame

Creating the work object

To calibrate the base frame, first create the work object. Then calibrate and verify the calibration.

Use this procedure to calibrate the base frame for CNV1.

1. Jog the mechanical unit M7 to the correct position according to the infeeder.
2. Perform a fine calibration of M7 in this position.
3. Activate the mechanical units M7 and CNV1.
```
ActUnit M7;
ActUnit CNV1;
```
4. Initialize the indexing conveyor by executing the following RAPID instruction where `indcnvdata1` is setup as described in *Testing the indexing conveyor setup on page 163*.
```
IndCnvInit M7, DI_Eye, indcnvdata1;
```
5. To make sure there are no objects in the object queue execute the RAPID instruction:
```
PulseDO \PLength:=0.1,c1RemAllPObj;
```
6. Add a new object to the object queue by executing the RAPID instruction:
```
IndCnvAddObject M7;
```
7. To be able to jog M7 during calibration it is necessary to reset the indexing functionality by executing the RAPID instruction:
```
IndCnvReset M7;
```

Calibrating the base frame

Start the base frame calibration routine of CNV1 and move the conveyor to the calibration positions by jogging the mechanical unit M7. See *Calibrating the base frame on page 74*.

Continue with verifying the calibration, see *Verifying the base frame calibration on page 75*.

© Copyright 2004-2025 ABB. All rights reserved.

12.3.6 indcnvdata

Description

The data type `indcnvdata` contains information about the indexing movement and the number of pockets that the work object holds.

Example

```
VAR indcnvdata indcnvdata1:=[0,0,0,0,0,0,0];
indcnvdata1.speed:= 2000;
indcnvdata1.acceleration := 25000;
indcnvdata1.productsperpick := 6;
indcnvdata1.productsperindex := 1;
indcnvdata1.accuracytuning := 0;
```

Components

speed

Conveyor speed in mm/s. Normally this parameter is set to a high value to create a motion profile that is triangular.

acceleration

Conveyor acceleration in mm/s^2. This value cannot be higher than what is configured in *Acceleration Data*, see *Type Acceleration Data on page 162*.

To avoid vibrations and overload of the mechanical structure, the values for acceleration and deceleration should not be set higher than the robot capacity at the given payload.

productsperpick

The number of pockets that offsets each work object. If there is one product in each pocket this parameter defines how many products the robot will pick in each robot cycle.

productsperindex

Use this parameter to set how many products that should enter each pocket before executing an indexing movement.

accuracytuning

This parameter can be used to tune the synchronization between robot and indexing conveyor and requires a high speed camera. The tuning value is default 0 and can be adjusted +-10ms.

© Copyright 2004-2025 ABB. All rights reserved.

12.3.7 IndCnvInit

Description

`IndCnvInit` used to set up the indexing conveyor functionality.

Example

```
IndCnvInit M7, DI_Eye, indcnvdata1;
```

Arguments

```
IndCnvInit MechUnit, Signal, indcnvdata1;
```

MechUnit

Mechanical Unit

Data type: `mechunit`

The name of the mechanical unit.

Signal

Signal

Data type: `signaldi`

The name of the digital input signal that triggers the indexing movement.

indcnvdata

Data type: `indcnvdata`

IndCnvData speed, acceleration, productsperpick, productsperindex, accuracytuning

Error handling

The following recoverable errors are generated and can be handled in an error handler. The system variable `ERRNO` will be set to:

`ERR_INT_NOTVAL`	Not valid integer, decimal value
`ERR_NO_ALIASIO_DEF`	The signal variable is a variable declared in RAPID. It has not been connected to an I/O signal defined in the I/O configuration with instruction `AliasIO`.
`ERR_NORUNUNIT`	If there is no contact with the I/O unit

© Copyright 2004-2025 ABB. All rights reserved.

12.3.8 IndCnvEnable and IndCnvDisable

Description

`IndCnvEnable` is used to set the system in indexing mode. An indexing movement will be executed when the signal is triggered (indexing mode).

`IndCnvDisable` is used to stop listening to the digital input signal. No indexing movement will be performed even if the signal is triggered.

Note

It is not possible to jog or run `Move` instructions on the indexing conveyor until a `IndCnvReset` instruction has been executed.

Example

```
IndCnvEnable M7;
IndCnvDisable M7;
```

Arguments

```
IndCnvEnable MechUnit;
IndCnvDisable MechUnit;
```

MechUnit

Mechanical Unit

Data type: `mechunit`

The name of the mechanical unit.

Error handling

The following recoverable errors are generated and can be handled in an error handler. The system variable `ERRNO` will be set to:

`ERR_INDCNV_ORDER`	An instruction requires execution of `IndCnvInit` before it is executed.

© Copyright 2004-2025 ABB. All rights reserved.

12.3.9 IndCnvReset

Description

`IndCnvReset` ends indexing mode and sets the system to normal mode which makes it possible to jog and run `Move` instructions.

Example

```
IndCnvReset M7;
```

Arguments

```
IndCnvReset MechUnit;
```

MechUnit

Mechanical Unit

Data type: `mechunit`

The name of the mechanical unit.

© Copyright 2004-2025 ABB. All rights reserved.

12.3.10 IndCnvAddObject

Description

To manually add an object to the object queue, the RAPID instruction `IndCnvAddObject` can be executed.

Example

```
IndCnvAddObject M7;
```

Arguments

```
IndCnvAddObject MechUnit;
```

MechUnit

Mechanical Unit

Data type: `mechunit`

The name of the mechanical unit.

© Copyright 2004-2025 ABB. All rights reserved.

12.3.11 RAPID programming example

Description

In this example an IRB 360 is picking a batch of products from an indexing conveyor (CNV1) and placing the products on the outfeed conveyor (CNV2). The outfeed conveyor is not controlled by the robot controller.

Example code

```
MODULE MainModule
TASK PERS wobjdata wobj1:= [FALSE,FALSE,"CNV1",[[0,0,0],
     [1,0,0,0]],[[0,0,0],[1,0,0,0]]];
TASK PERS wobjdata wobj2:= [FALSE,FALSE,"CNV2",[[0,0,0],
     [1,0,0,0]],[[0,0,0],[1,0,0,0]]];
CONST robtarget WaitPos:= [[-129.82,1.57,-
     924.52],[0,0.999848,-0.0174063,0],
     [0,0,0,0],[0,9E+09,9E+09,9E+09,0,0]];
CONST robtarget Cnv1_Above:= [[24.81,40.73,34.42],
     [0.000115829,-0.753048,0.657965,-0.000112099],
     [0,1,0,0],[171.015,9E+09,9E +09,9E+09,277.57,400]];
CONST robtarget Cnv1_Below:= [[24.81,40.73,-9.77],
     [0.000115827,-0.75306,0.657952,-0.000112101],
     [0,1,0,0],[171.015,9E+09,9E +09,9E+09,277.57,400]];
CONST robtarget Cnv2_Above:= [[-23.46,-1.68,201.85],
     [1.72038E-05,0.997874,0.0651587,-0.000988565],
     [0,0,0,0],[158.015,9E+09,9E +09,9E+09,277.57,0]];
CONST robtarget Cnv2_Below:= [[-23.46,-1.68,55.28],
     [1.72335E-05,0.997876,0.0651288,-0.000988564],
     [0,0,0,0],[158.015,9E+09,9E +09,9E+09,277.57,0]];
PERS tooldata Tool_2:=[TRUE,[[0,0,56.5],[1,0,0,0]],
     [2,[0,0,26],[1,0,0,0],0,0,0.0016]];
VAR triggdata EaciPick;
VAR triggdata EaciPlace;
VAR speeddata speed_eaci;
VAR indcnvdata indcnvdata1:=[0,0,0,0,0,0,0];
VAR num prod_cnt;
CONST stoppointdata
     stoppoint_eaci:=[3,FALSE,[0,0,0,0],0,0.035,"",0,0];
PROC main()
  indcnvdata1.speed := 2000;
  indcnvdata1.acceleration := 25000;
  indcnvdata1.productsperpick := 6;
  indcnvdata1.productsperindex := 1;

  prod_cnt := 0;

  speed_eaci.v_tcp:= 5000;
  speed_eaci.v_ori:= 10000;

  ! Activate mechanical units
  ActUnit M7;
  ActUnit CNV1;
```

Continues on next page

© Copyright 2004-2025 ABB. All rights reserved.

```
ActUnit CNV2;

! Remove from queue and drop objects
PulseDO \PLength:=0.1,c1RemAllPObj;
PulseDO \PLength:=0.1,c2RemAllPObj;
DropWObj wobj1;
IF c2Connected = 1 THEN
  DropWObj wobj2;
ENDIF

! Set up pick and place trigg data
TriggEquip EaciPick, 2, 0.05 \DOp:=EaciSuck, 1;
TriggEquip EaciPlace, 2, 0.05 \DOp:=EaciSuck, 0;

! Set indexing conveyor CNV1 in indexing mode and start listening
     to the photo eye signals
IndCnvInit M7, DI_Eye, indcnvdata1;IndCnvEnable M7;
! Go to init position
MoveL WaitPos, v1000, fine, Tool_2;

WHILE TRUE DO

  ! CNV1 Pick
  WaitWObj wobj1\RelDist:=300;
  MoveL Cnv1_Above, speed_eaci, z20, Tool_2\WObj:=wobj1;
  TriggL Cnv1_Below, speed_eaci, EaciPick,
       z1\Inpos:=stoppoint_eaci, Tool_2\WObj:=wobj1;
  MoveL Cnv1_Above, speed_eaci, z20, Tool_2\WObj:=wobj1;
  IF prod_cnt >= 1 THEN
    DropWObj wobj2;
  ENDIF
  ! CNV2 Place
  WaitWObj wobj2\RelDist:=50;
  MoveL Cnv2_Above, speed_eaci, z20, Tool_2\WObj:=wobj2;


  TriggL Cnv2_Below, speed_eaci, EaciPlace,
       z1\Inpos:=stoppoint_eaci, Tool_2\WObj:=wobj2;
  MoveL Cnv2_Above, speed_eaci, z20, Tool_2\WObj:=wobj2;

  prod_cnt := prod_cnt + 1;
  TPErase;
  TPWrite " Number of products: "\Num:=prod_cnt;

  DropWObj wobj1;
ENDWHILE

! Move program pointer to the instructions below to enable e.g.
     jogging
! Stop listening to the photo eye signals
IndCnvDisable M7;
```

Continues on next page

© Copyright 2004-2025 ABB. All rights reserved.

12.3.11 RAPID programming example
Continued

```
    ! Set indexing conveyor in normal mode
    IndCnvReset M7;
  ENDPROC
  ENDMODULE
```


© Copyright 2004-2025 ABB. All rights reserved.

12.3.12 Minimizing trigger time

Trigger time

If the parameter *Time before indexing move* is set too short, the error **50423 IndCnv Time before indexing move too low** can occur.

To minimize the time between the trigger from the photo eye and start of the conveyor movement, follow the description below:

1. Set *Time before indexing move* to a high value, for example 0.4 s.
2. If trigger time is critical there is a chance to reduce the time by changing the parameters as suggested in *Possible solutions on page 173*.
3. Run the full application with the robot coordinated to CNV1 and with full robot payload.
4. Run the service routine `IndCnvOptimalTimeBefore` to get a proposed optimal time before.
5. Update *Time before indexing move* to match the value proposed by the service routine.

There is a risk that the value suggested by the service routine `IndCnvOptimalTimeBefore` is too small so some extra 10 ms margin might be needed.

Possible solutions

Change the following parameters in the type *Motion Planner*.

Parameter	Value
Dynamic Resolution	0.3333
Path Resolution	0.3333
Queue Time	0.032256
Group Queue Time	0.016128

Possible limitations

If the error **50082 Deceleration limit** occurs, return to the original setting of *Queue Time* (which is 0.064512), in the type *Motion Planner* (topic *Motion*).

If the error **50226 Motor reference error** occurs, return to the original setting of *Group Queue Time* (which is 0.032256), in the type *Motion Planner* (topic *Motion*).

© Copyright 2004-2025 ABB. All rights reserved.

This page is intentionally left blank

13 Conveyor tracking and MultiMove

13.1 About conveyor tracking and MultiMove

Examples of use

Here are some examples of applications where conveyor tracking is combined with MultiMove:

- Several robots can work on the same object moving on a conveyor.
- Several robots can cooperate to pick objects on a conveyor.

Additional information

If the option *Indexing Conveyor Control* is used for a conveyor in a MultiMove system, then some additional parameters must be defined. See *System parameters and configuration files on page 158*. See also *Indexing conveyor with servo control (Indexing Conveyor Control) on page 155*.

Application manual - MultiMove

Two application examples

This manual describes two examples of robot system setups to demonstrate how conveyor tracking can be combined with MultiMove. They are called *UnsyncCnv* and *SyncCnv*. See *Configuration example for UnsyncCnv on page 177*, and *Configuration example for SyncCnv on page 179*.

UnsyncCnv

In the example UnsyncCnv, two robots work independently on one work piece for each robot. They do not cooperate in any way and do not have to wait for each other. There is one conveyor mechanical unit for each robot.

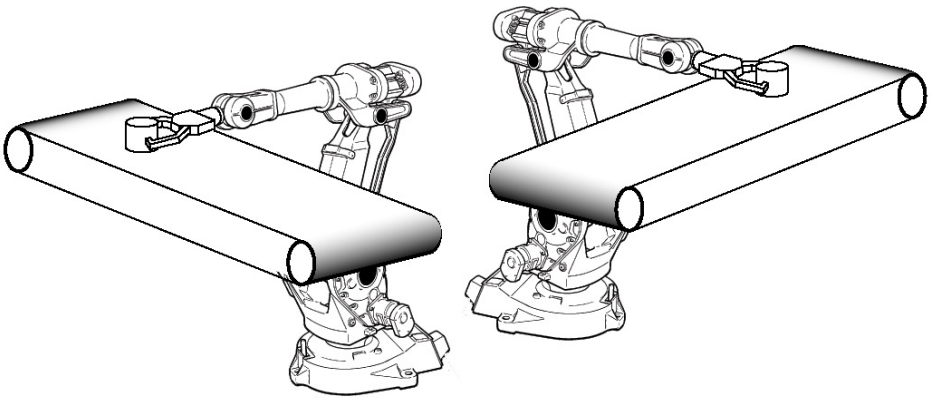

xx1200001107

Continues on next page

© Copyright 2004-2025 ABB. All rights reserved.

SyncCnv

In the example SyncCnv, two robots arc weld on the same work piece. The work object is moved by a conveyor. One conveyor mechanical unit is used in a separate motion planner.

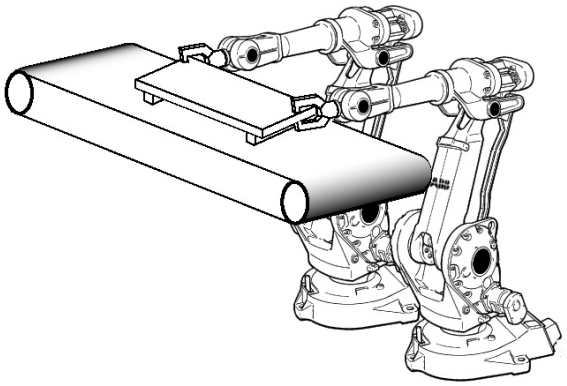

xx1200001108

© Copyright 2004-2025 ABB. All rights reserved.

13.2 Configuration example for UnsyncCnv

About this example

This section describes how to configure the example UnsyncCnv, with two independent robots. The robots are handled by one task each.

Configuration

Task

Task	Type	MotionTask	Use Mechanical Unit Group
T_ROB1	NORMAL	Yes	rob1
T_ROB2	NORMAL	Yes	rob2

Mechanical Unit Group

Name	Robot	Mech Unit 1	Use Motion Planner
rob1	ROB_1	CNV1	motion_planner_1
rob2	ROB_2	CNV2	motion_planner_2

Motion Planner

Name
motion_planner_1
motion_planner_2

Mechanical Unit

Name	Allow Move of User Frame	Activate at Start-up	Deactivation Forbidden	Use Brake Relay
ROB_1	No	Yes	No	
ROB_2	No	Yes	No	
CNV1	Yes	No	No	rob1_brake
CNV2	Yes	No	No	rob2_brake

Continues on next page

© Copyright 2004-2025 ABB. All rights reserved.

Illustration

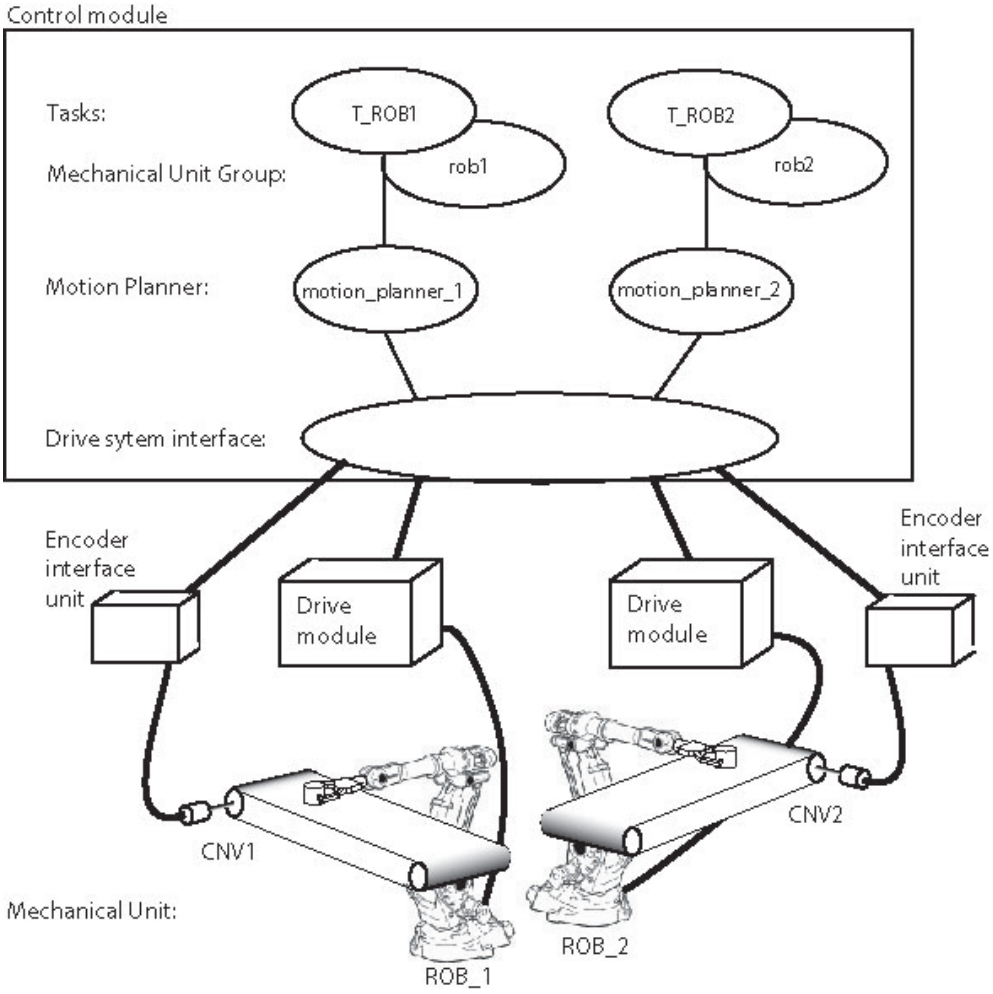

xx1200001109

© Copyright 2004-2025 ABB. All rights reserved.

13.3 Configuration example for SyncCnv

About this example

This section describes how to configure the example SyncCnv, with two robots and one positioner. Each mechanical unit is handled by a separate task.

Configuration

Task

Task	Type	MotionTask	Use Mechanical Unit Group
T_ROB1	NORMAL	Yes	rob1
T_ROB2	NORMAL	Yes	rob2
T_CONV3	NORMAL	Yes	conv3

Mechanical Unit Group

Name	Robot	Mech Unit 1	Use Motion Planner
rob1	ROB_1		motion_planner_1
rob2	ROB_2		motion_planner_2
conv3		CNV3	motion_planner_3

Motion Planner

Name
motion_planner_1
motion_planner_2
motion_planner_3

Mechanical Unit

Name	Allow Move of User Frame	Activate at Start-up	Deactivation Forbidden	Use Brake Relay
ROB_1	No	Yes	No	
ROB_2	No	Yes	No	
CNV3	Yes	Yes	No	rob1_brake

Continues on next page

© Copyright 2004-2025 ABB. All rights reserved.

Illustration

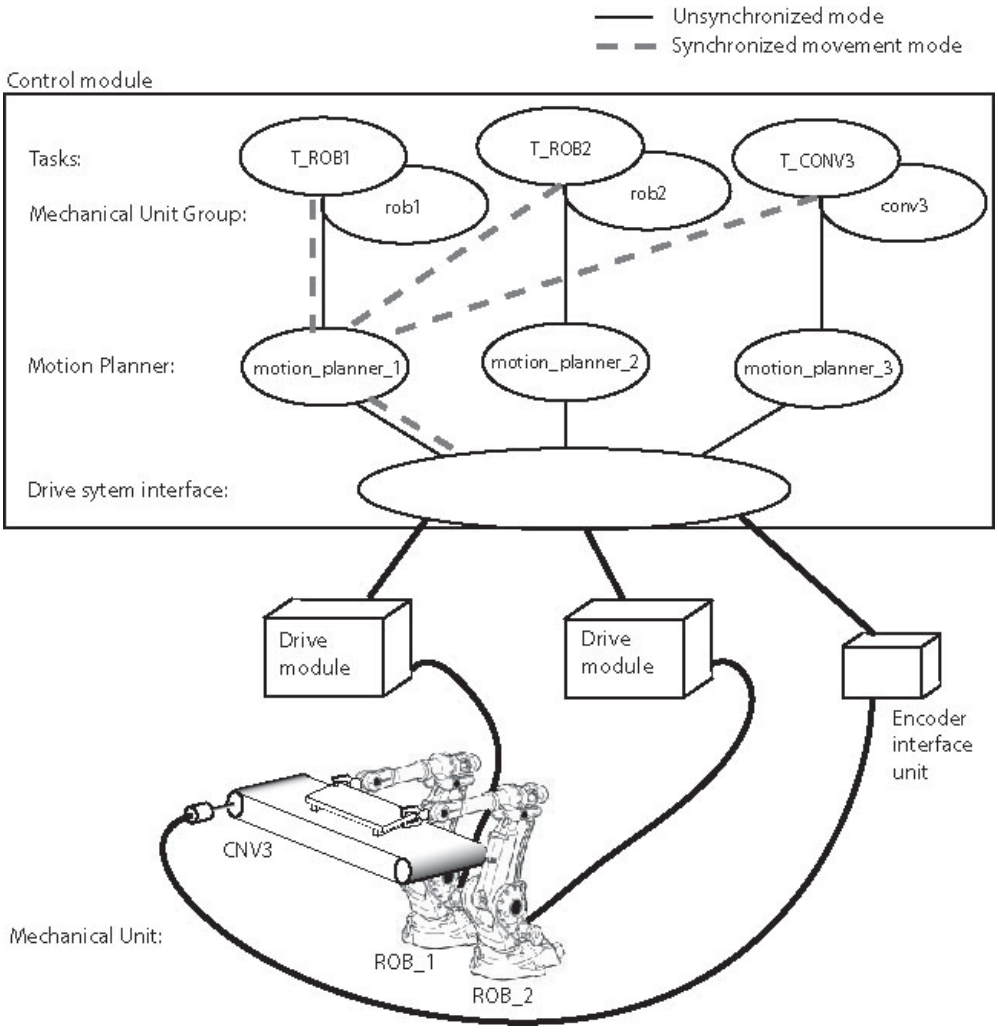

xx1200001110

Calibration overview

For unsynchronized movements each conveyor must be calibrated with its motion group robot (after the base calibration of the robot):

- Cnv1 with Robot_1
- Cnv2 with Robot_2

For synchronized movements Cnv3 is calibrated with one robot only: Robot_1.

© Copyright 2004-2025 ABB. All rights reserved.

13.4 Tasks and programming techniques

Introduction to tasks

Each task program can handle the movements for one robot and up to 6 additional axes. Several tasks can be used, each containing a program quite similar to the program of the main task in a single robot application. For more information about tasks, see *Multitasking* in *Application manual - Controller software IRC5*.

One task program per robot

Each task program can only handle one TCP. This means that you must have one task for each robot.

Conveyor in separate tasks

Conveyors that move a work object can be handled by the same task program as one of the robots for un-synchronized movements. For synchronized movements where the conveyor should be able to move independently of the robots, it is best to have a separate task program for the conveyor.

Modifying positions

When modifying positions it is not possible to just stop the conveyor and modify the position. If this is done, there will be an offset in the position that corresponds to the length of the conveyor movement. This is since the conveyor and the robots belong to different mechanical unit groups, see *Configuration example for SyncCnv on page 179*, and the position of the conveyor is not known to the robots at this point.

To be able to modify positions, the conveyor must belong to the same mechanical unit group as the robot. This is done by creating "fake" conveyors that are only used for modifying positions.

Example

Below there is a configuration example for topic *System*. Conveyors `CNV1` and `CNV2` are "fake" conveyors, and conveyor `CNV3` is the real conveyor.

Task:

Task	Type	MotionTask	Use Mechanical Unit Group
T_ROB1	NORMAL	Yes	ROB1
T_ROB2	NORMAL	Yes	ROB2
T_CNV	NORMAL	Yes	GCNV

Mechanical Unit Group:

Name	Robot	Mech Unit 1	Use Motion Planner
ROB1	ROB_1	CNV1	motion_planner_1
ROB2	ROB_2	CNV2	motion_planner_2
GCNV		CNV3	motion_planner_3

Continues on next page

© Copyright 2004-2025 ABB. All rights reserved.

Mechanical Unit:

Name	Allow Move of User Frame	Activate at Start-tup	Deactivation Forbidden	Use Brake Relay
CNV1	Yes	No	No	rob1_brake
CNV2	Yes	No	No	rob2_brake
CNV3	Yes	Yes	No	rob1_brake

In the configuration for topic *Process*, the "fake" conveyors `CNV1` and `CNV2` must be connected to the same encoder as `CNV3`, and must be configured using the same I/O signals as `CNV3`, see *Combining synchronized and un-synchronized mode on page 189*.

The last step is to create unsynchronized RAPID procedures for each task with move instructions where the positions can be modified.

	Action
1	Create new work objects for the "fake" conveyors, for example `wobj_CNV1` for `ROB_1` and `wobj_CNV2` for `ROB_2`. (In the synchronized production program both robots uses the same work object, for example `wobj_CNV3`.)

2	Copy the production procedures for robot 1, remove the synchronization, and replace the work objects.
	For example, the production procedure in synced task `T_ROB1`:
	`MoveL p101\ID:=10, v300, fine, tool1\WObj:=wobj_CNV3;`
	`MoveL p102\ID:=20, v300, fine, tool1\WObj:=wobj_CNV3;`
	`MoveL p103\ID:=30, v300, fine, tool1\WObj:=wobj_CNV3;`
	is copied to a new routine and modified:
	`MoveL p101, v300, fine, tool1\WObj:=wobj_CNV1;`
	`MoveL p102, v300, fine, tool1\WObj:=wobj_CNV1;`
	`MoveL p103, v300, fine, tool1\WObj:=wobj_CNV1;`

3	Copy the production procedures for robot 2, remove the synchronization, and replace the work objects.
	For example, the production procedure in synced task `T_ROB2`:
	`MoveL p201\ID:=10, v300, fine, tool1\WObj:=wobj_CNV3;`
	`MoveL p202\ID:=20, v300, fine, tool1\WObj:=wobj_CNV3;`
	`MoveL p203\ID:=30, v300, fine, tool1\WObj:=wobj_CNV3;`
	is copied to a new routine and modified:
	`MoveL p201, v300, fine, tool1\WObj:=wobj_CNV2;`
	`MoveL p202, v300, fine, tool1\WObj:=wobj_CNV2;`
	`MoveL p203, v300, fine, tool1\WObj:=wobj_CNV2;`

4	Modify the positions for each robot.

© Copyright 2004-2025 ABB. All rights reserved.

13.5 Independent movements, example UnsyncCnv

ROB1 task program

```
MODULE module1
  TASK PERS wobjdata wobj1 := [ FALSE, TRUE, "", [ [500, -200,
       1000], [1, 0, 0 ,0] ], [ [100, 200, 100], [1, 0, 0, 0] ]
       ];
  TASK PERS wobjdata wobjcnv1 := [ FALSE, FALSE, "CNV1", [ [0,0,
       0], [1, 0, 0 ,0] ], [ [0, 0, 0], [1, 0, 0, 0] ] ];
  TASK PERS tooldata tool1 := ...
  CONST robtarget p11 := ...
  ...
  CONST robtarget p14 := ...

  PROC main()
    ...
    IndependentMove;
    ...
  ENDPROC

  PROC IndependentMove()
    MoveL p11, v500, fine, tool1\WObj:=wobj1;
    WaitWObj wobjcnv1\RelDist:=10;
    MoveC p12, p13, v500, z10, tool1\WObj:=wobjcnv1;
    MoveC p14, p11, v500, fine, tool1\WObj:=wobj1;
  ENDPROC
ENDMODULE
```

ROB2 task program

```
MODULE module2
  TASK PERS wobjdata wobj2 := [ FALSE, TRUE, "", [ [500, -200,
       1000], [1, 0, 0 ,0] ], [ [100, 1200, 100], [1, 0, 0, 0] ]
       ];
  TASK PERS wobjdata wobjcnv2 := [ FALSE, FALSE, "CNV2", [ [0,0,
       0], [1, 0, 0 ,0] ], [ [0, 0, 0], [1, 0, 0, 0] ] ];
  TASK PERS tooldata tool2 := ...
  CONST robtarget p21 := ...
  ...
  CONST robtarget p24 := ...

  PROC main()
    ...
    IndependentMove;
    ...
  ENDPROC

  PROC IndependentMove()
    MoveL p21, v500, fine, tool2\WObj:=wobj2;
    WaitWObj wobjcnv2\RelDist:=10;
    MoveL p22, v500, z10, tool2\WObj:=wobjcnv2;
    MoveL p23, v500, z10, tool2\WObj:=wobjcnv2;
```

Continues on next page

© Copyright 2004-2025 ABB. All rights reserved.

```
    MoveL p24, v500, z10, tool2\WObj:=wobjcnv2;
    MoveL p21, v500, fine, tool2\WObj:=wobj2;
  ENDPROC
ENDMODULE
```


© Copyright 2004-2025 ABB. All rights reserved.

13.6 Coordinated synchronized movements, example SyncCnv

ROB1 task program

```
MODULE module1
  VAR syncident sync1;
  VAR syncident sync2;
  VAR syncident sync3;
  PERS tasks all_tasks{3} := [["ROB1"],["ROB2"],["CONV3"]];
  PERS wobjdata wobjcnv3 := [ FALSE, FALSE, "CNV3", [ [0, 0, 0],
       [1, 0, 0 ,0] ], [ [0, 0, 0], [1, 0, 0, 0] ] ];
  TASK PERS tooldata tool1 := ...
  CONST robtarget p100 := ...
  ...
  CONST robtarget p199 := ...

  PROC main()
    ...
    SyncMove;
    ...
  ENDPROC

  PROC SyncMove()
    MoveJ p100, v1000, z50, tool1;
    WaitSyncTask sync1, all_tasks;
    MoveL p101, v500, fine, tool1\WObj:=wobj1;
    SyncMoveOn sync2, all_tasks;
    MoveL p102\ID:=10, v300, fine, tool1\WObj:=wobjcnv3;
    MoveC p103, p104\ID:=20, v300, z10, tool1\WObj:=wobjcnv3;
    MoveL p105\ID:=30, v300, z10, tool1\WObj:=wobjcnv3;
    MoveC p106, p101\ID:=40, v300, fine, tool1\WObj:=wobj1;
    SyncMoveOff sync3;
    MoveL p199, v1000, fine, tool1;
    UNDO
    SyncMoveUndo;
  ENDPROC
ENDMODULE
```

ROB2 task program

```
MODULE module2
  VAR syncident sync1;
  VAR syncident sync2;
  VAR syncident sync3;
  PERS tasks all_tasks{3} := [["ROB1"],["ROB2"],["CONV3"]];
  PERS wobjdata wobjcnv3 := [ FALSE, FALSE, "CNV3", [ [0, 0, 0],
       [1, 0, 0 ,0] ], [ [0, 0, 0], [1, 0, 0, 0] ] ];

  TASK PERS tooldata tool2 := ...
  CONST robtarget p200 := ...
  ...
  CONST robtarget p299 := ...
```

Continues on next page

© Copyright 2004-2025 ABB. All rights reserved.

```
  PROC main()
    ...
    SyncMove;
    ...
  ENDPROC

  PROC SyncMove()
    MoveJ p200, v1000, z50, tool2;
    WaitSyncTask sync1, all_tasks;
    MoveL p201, v500, fine, tool2 \WObj:=wobj2;
    SyncMoveOn sync2, all_tasks;
    MoveL p202\ID:=10, v300, fine, tool2\WObj:=wobjcnv3;
    MoveC p203, p204\ID:=20, v300, z10, tool2\WObj:=wobjcnv3;
    MoveL p205\ID:=30, v300, z10, tool2\WObj:=wobjcnv3;
    MoveC p206, p201\ID:=40, v300, fine, tool2\WObj:=wobj2;
    SyncMoveOff sync3;
    MoveL p299, v1000, fine, tool2;
    UNDO
    SyncMoveUndo;
  ENDPROC
ENDMODULE
```

CONV3 task program

```
MODULE module3
  VAR syncident sync1;
  VAR syncident sync2;
  VAR syncident sync3;
  PERS tasks all_tasks{3} := [["ROB1"],["ROB2"], ["CONV3"]];
  PERS wobjdata wobjcnv3 := [ FALSE, FALSE, "CNV3", [ [0, 0, 0],
       [1, 0, 0 ,0] ], [ [0, 0, 0], [1, 0, 0, 0] ] ];
  CONST jointtarget angle_0 := [ [ 9E9, 9E9, 9E9, 9E9, 9E9, 9E9],
       [ 0, 9E9, 9E9, 9E9, 9E9, 9E9] ];
  ...
  CONST jointtarget angle_360 := [ [ 9E9, 9E9, 9E9, 9E9, 9E9, 9E9],[
       360, 9E9, 9E9, 9E9, 9E9, 9E9] ];
  PROC main()
    ...
    SyncMove;
    ...
  ENDPROC


  PROC SyncMove()
    MoveExtJ angle_neg20, vrot50, fine;
    WaitSyncTask sync1, all_tasks;
    ! Wait for the robots
    WaitWObj wobjcnv3;

    SyncMoveOn sync2, all_tasks;
    MoveExtJ angle_20\ID:=10, vrot100, fine;
```

Continues on next page

© Copyright 2004-2025 ABB. All rights reserved.

```
    WaitWObj wobjcnv3\RelDist:=100;
    MoveExtJ angle_160\ID:=20, vrot100, z10;
    MoveExtJ angle_200\ID:=30, rot100, z10;
    MoveExtJ angle_340\ID:=40, rot100, fine;
    SyncMoveOff sync3;
    DropWobj wobjcnv3;
    UNDO
    SyncMoveUndo;
  ENDPROC
ENDMODULE
```


© Copyright 2004-2025 ABB. All rights reserved.

13.7 Motion principles

Robot speeds

When the movements of several robots are synchronized, all robots adjust their speed to finish their movements simultaneously. This means that the robot movement that takes the longest time will determine the speed of the other robots.

© Copyright 2004-2025 ABB. All rights reserved.

13.8 Combining synchronized and un-synchronized mode

Introduction

For a combination of synchronized and un-synchronized mode is needed with a single conveyor there must be two mechanical units for un-synchronized mode. For example CNV1 and CNV2 can be connected to the same encoder. CNV3 can be configured using the same I/O signals as CNV1 in the topic *Process*. Replace default *C2xx* signals name with *C1xx* (that is, *position_signal c2position* becomes *position_signal c1position*).

Configuration

The configuration file Proc.cfg will look like this:

Conveyor

```
-name "CNV1" -sensor_type "CAN" -use_sensor "CAN1"\
-adjustment_speed 250 -min_dist -600 -max_dist 20000\
-correction_vector_ramp_length 10
#
-name "CNV2" -sensor_type "CAN" -use_sensor "CAN2"\
-adjustment_speed 250 -min_dist -600 -max_dist 20000\
-correction_vector_ramp_length 10
#
-name "CNV3" -sensor_type "CAN" -use_sensor "CAN3"\
-adjustment_speed 250 -min_dist -600 -max_dist 20000\
-correction_vector_ramp_length 10
#
```

Conveyor CAN sensor

```
-name "CAN1" -eio_unit_name "Qtrack1" -connected_signal
     "c1Connected"\
-position_signal "c1Position" -velocity_signal "c1Speed"\
-null_speed_signal "c1NullSpeed" -wait_wobj_signal "c1WaitWObj"\
-drop_wobj_signal "c1DropWObj" -data_timestamp "c1DTimestamp"\
-rem_all_pobj_signal "c1RemAllPObj"\
-rem_one_pobj_signal "c1Rem1PObj"
#
-name "CAN2" -eio_unit_name "Qtrack1" -connected_signal
     "c1Connected"\
-position_signal "c1Position" -velocity_signal "c1Speed"\
-null_speed_signal "c1NullSpeed" -wait_wobj_signal "c1WaitWObj"\
-drop_wobj_signal "c1DropWObj" -data_timestamp "c1DTimestamp"\
-rem_all_pobj_signal "c1RemAllPObj"\
-rem_one_pobj_signal "c1Rem1PObj"
#
-name "CAN3" -eio_unit_name "Qtrack1" -connected_signal
     "c1Connected"\
-position_signal "c1Position" -velocity_signal "c1Speed"\
-null_speed_signal "c1NullSpeed" -wait_wobj_signal "c1WaitWObj"\
-drop_wobj_signal "c1DropWObj" -data_timestamp "c1DTimestamp"\
-rem_all_pobj_signal "c1RemAllPObj"\
-rem_one_pobj_signal "c1Rem1PObj"
```


© Copyright 2004-2025 ABB. All rights reserved.

This page is intentionally left blank

14 Troubleshooting

14.1 Overview

Introduction

This chapter details the various problem scenarios in conveyor tracking and how to troubleshoot those scenarios.

In this chapter

This chapter contains the following topics:

Topics	For more information
Event messages	*Event messages on page 192*
System parameters	*System parameters on page 195*
Robot path characteristics	*Robot path characteristics on page 196*
Power failure	*Power failure on page 198*
Collision detection	*Collision detection on page 199*
Technical support	*Technical support on page 200*

© Copyright 2004-2025 ABB. All rights reserved.

14.2 Event messages

Overview

This section details the different event messages and the information required to troubleshoot them.

Event messages

50082: Path calculation time exceeded

Description

The path calculation time for mechanical units running in motion planner `arg1` exceeds internal limit. The motion task did not execute within its time limit.

Cause

The CPU load is high. For example, due to frequent EIO communication.

Recommended actions

The following are the recommended actions:

- Set the system parameter `High Interpolation Priority` for the affected motion planner.
- Try to reduce the CPU load by one or more of the following actions:
  - Reduce speed.
  - Change `AccSet`.
  - Avoid singularity (SingArea\Wrist).
  - If the error occurs immediately after the start from finepoint, then increase the configuration parameter `Interpolation Buffer Startup Adjust` in the topic Motion and type Motion Planner.
- If using release 6.02.01 or 6.03.00 and the motion parameter `optimized_start_from_finepoint` is set to 1, then set the parameter to 0.

50163: Position adjustment

Description

External position adjustment too large. TCP speed, orientation speed, or external position speed exceed allowed robot performance.

Cause

The following are the probable causes:

- Dynamic limitations of the robot.
- Change in the robot's direction at high speed.

Recommended actions

The following are the recommended actions:

- Reduce the programmed TCP and orientation speeds.
- Modify the path.
- Ensure the program `WaitWObj` is closer to sync.
- Run in AUTO.

Continues on next page

© Copyright 2004-2025 ABB. All rights reserved.

- Tune `adjustment_accel`.
- Verify that the system parameter adjustment speed has a correct value, see *Type Conveyor systems on page 101*. If the value is correct and the problem remains, increasing it carefully within the recommended boundaries may help.

> **Note**
>
> Start tracking in zone with change of robot's direction. Avoid starting the robot with a movement that is opposite in direction to the conveyor's movement.

50366: Reference error

Description

An error has occurred in the reference calculation in motion planner `arg1`. Internal status `arg2`. As a consequence, the controller goes to Motors Off.

Cause

The following are the probable causes:

- The robot path corrections are high.
- The programmed TCP speed is high.
- The robot is closely tracking the conveyor to a singularity. This usually happens in six axis robots when axis 4 and 6 is in line. Often seen in applications with roof hanging robots.
- The performance is reduced by the use of `AccSet` or `PathAccLim` instructions.
- The corvec ramp is too short creating high acceleration.

Recommended actions

The following are the recommended actions:

- Check the error logs for previous errors that could be causing the present problem.
- Restart the program after moving the program pointer.
- Restart the controller.
- Set the robot speed slightly higher in RAPID.
- Start tracking after `MoveJ` with big zone. Add a short linear movement.

50376: Geometric interpolation failed

Description

`Task. arg1.`

Failed to interpolate the desired geometry.

`Program ref. arg2.`

`(Internal code: arg3).`

Recommended actions

Increase the zone size, move the programmed point, change the tool orientation or change the interpolation method.

Continues on next page

© Copyright 2004-2025 ABB. All rights reserved.

50496: Conveyor Tracking position error at pick

Description

Actual TCP position for robot `arg1` is too far away from the ordered position on conveyor `arg2` due to ramping. Position error: `arg3`. As a consequence, the robot may miss the picking or placing.

Cause

The ramping of correction is not finished when reaching pick position.

Recommended actions

The following are the recommended actions:

- Increase the distance between pick and place positions to ensure that the ramping is finished.
- Reduce programmed speed.
- Reduce ramping length. Set the configuration parameter `Start ramp` and `Stop ramp` in **Process** > **Conveyor systems** > **parameters**.
- Increase the **max allowed position error** at pick or place position by setting the configuration parameter `Max tracking error at pick pos`.

50024: Corner path failure

Description

Corner path executed as stop point due to some of the following reasons:

- Time delay.
- Closely programmed points.
- System requires high CPU load.

Recommended actions

The following are the recommended actions:

- Edit MOC.cfg and add in *motion_planner*: `-optimized_start_from_finepoint 0 -ipol_buffer_startup_adj 2 -ipol_margin_for_servo_queue_time 0.4`.
- Use programmed speed that is close to what the robot can do, for example do not use `vmax`.
- Use `corvec_correction_level 1` instead of `3`. This should also help if the conveyor is running in constant speed.

© Copyright 2004-2025 ABB. All rights reserved.

14.3 System parameters

Overview

This section describes the troubleshooting steps for system parameters used in conveyor tracking.

Configuration process

As part of the configuration process (`PROC.cfg`), the following parameters should be set to their corresponding values:

- `adjustment_speed`: This parameter should be set to a value according to the description in *Type Conveyor systems on page 101*.
- `adjustment_accel`: This parameter is not used by default, but can be tuned depending on the type of the robot. Suggested values for IRB340 is 50000 and for IRB660 is 7000.
- `Acc_dependent_filter_value` and `sync_filter_speed_ratio`:

  The parameter `Acc_dependent_filter_value` is used by default (1). For accelerating or indexing conveyors, it is recommended to turn it off (0). For the same applications, `sync_filter_speed_ratio` should be set to 0.0001.

© Copyright 2004-2025 ABB. All rights reserved.

14.4 Robot path characteristics

Overview

This section describes the troubleshooting steps for robot path characteristics used in conveyor tracking.

Changes to TCP speed

Avoid making major changes to the speed during conveyor tracking, especially in case of larger robots.

> **Note**
>
> The programmed path should be close to the actual performance of the robot, as a smooth path results in a path with better accuracy.

Changes to direction

- Avoid changing the direction of the robots at high speed.
- Avoid start tracking in zone with change of the robot direction.
- Avoid starting the robot's movement in opposite to the direction of the conveyor movement.

Changes to ramp length

The robot needs to ramp the conveyor tracking path corrections. During ramping, the robot is not in the correct position in relation to the conveyor. The ramp length can be tuned using *Start ramp* and *Stop ramp* in the process configuration.

- `correction_vector_ramp_length`: Increasing the value of this process parameter (`PROC.cfg`) smoothens the movement but will also increase the distance between the robot's position in relation to the moving conveyor. Use a long ramp to reduce the mechanical stress in robot, and ensure to have a longer path to the pick or place position.
- `correction_vector_stop_ramp`: Increasing the value of this process parameter (`PROC.cfg`) smoothens the movement at the end of tracking but can affect the start tracking movement on next conveyor when switching conveyor in zone.

Programming TCP speed

If the robot does not reach this speed, then avoid programing it to the maximum speed (`VelSet 100,10000;`). Setting a speed that is close to the actual speed of the robot results in a smoother path and a better accuracy. The actual robot TCP speed can be viewed in Robotstudio signal analyzer.

If Robotstudio is not used, then the recommendation for IRB360 1.13 models is `VelSet 100,7000` and for IRB360 1.6 and 1.8 models, it is `VelSet 100,6000`; For other models of robot, use `VelSet 100,5000` in case of heavy load.

If Pickmaster is used, then verify that the RAPID variable low speed is really low in InitSpeed routine `MaxSpeed.v_tcp:=Vtcp`; `LowSpeed.v_tcp:=Vtcp/3`;

Continues on next page

© Copyright 2004-2025 ABB. All rights reserved.

Ensure that low speed is set for vertical movements and between picks in case of multiple picks.

Jerky movements

Jerky or rough robot movements are usually due to major path corrections when ramping out or when switching conveyors or during stop tracking.

Check the program with high TCP speed on vertical movements and eventually limit acceleration by using the `PathAccLim` instruction.

Low value on configuration parameter `adjustment_speed` can cause jerky movements. Verify that the system parameter adjustment speed has a correct value, see *Type Conveyor systems on page 101*. If the value is correct and the problem remains, increasing it carefully within the recommended boundaries may help.

I/O problems

During tracking, if the robot controller loses I/O connection to the encoder interface, then a `sys_stop` occurs. To jog the robot, you need to change the `Wobj` program as the current one will be on the conveyor. Instead of trying to regain a position on the conveyor, it is better to move the program pointer to the routine Main (PP to Main) to clear the current path.

© Copyright 2004-2025 ABB. All rights reserved.

14.5 Power failure

Description

During tracking, if the power fails, then the conveyor loses the connection. After a restart, the previous path is not recalculated. Move the program pointer to the routine main (PP to Main).

© Copyright 2004-2025 ABB. All rights reserved.

14.6 Collision detection

Description

After a collision is detected, the movement is retracted using the joint interpolation method. The movement of the robot is related to the previous joint path and not the conveyor. It is possible that the robot might move backward and collide again.

However, from RobotWare 6.05 onwards it is possible to avoid the retraction movement by using the switch `\NoBackoff` in the instruction `MotionSup`.

© Copyright 2004-2025 ABB. All rights reserved.

14.7 Technical support

Overview

For questions or problems with conveyor tracking, contact your local ABB Robotics Service representative, see *http://www.abb.com/*.

© Copyright 2004-2025 ABB. All rights reserved.

Index

3
3rd party software, 13

A
accelerating conveyors, 133
ActivateProfile, 150
activating conveyor, 89
additional axes, 19
additional conveyors, 85

B
base frame calibration, 73

C
circular conveyor tracking, 123
CNV1
  indexing conveyor, 156
CnvGenInstr, 152
conveyor base frame, 73
coordinate systems, 23
CountsPerMeter, 71–72
counts per meter, 71–72

D
DeactProfile, 151
distance
  maximum, 78
  minimum, 78
DropWObj, 110

E
encoder
  prerequisites, 41
  selecting type, 40

F
frames, 23

H
high speed conveyors, 111

I
IndCnvAddObject, 169
indcnvdata, 165
IndCnvDisable, 167
IndCnvEnable, 167
IndCnvInit, 166
IndCnvReset, 168
Indexing Conveyor Control
  description, 155
indexing mode, 156

L
licenses, 13
limitations
  Indexing Conveyor Control, 156
LoadProfile, 149

M
M7
  indexing conveyor, 156
motor, 39
MultiMove, 175
  independent, 175
  syncronized, 175

N
network security, 12

O
object queue, 120
open source software, OSS, 13

P
principles of conveyor tracking, 20

Q
queue tracking, 117
queue tracking distance, 71–72
QueueTrckDist, 71–72

R
RecordProfile, 145
robot adjustment speed, 80

S
software licenses, 13
speed
  robot, 80
start window, 77
StoreProfile, 148
Sync Separation, 77

T
track motion, 19, 82

U
UseAccProfile, 137

W
WaitAndRecProf, 146
WaitWObj, 107

© Copyright 2004-2025 ABB. All rights reserved.

ABB AB
Robotics & Discrete Automation
S-721 68 VÄSTERÅS, Sweden
Telephone +46 10-732 50 00

ABB AS
Robotics & Discrete Automation
Nordlysvegen 7, N-4340 BRYNE, Norway
Box 265, N-4349 BRYNE, Norway
Telephone: +47 22 87 2000

ABB Engineering (Shanghai) Ltd.
Robotics & Discrete Automation
No. 4528 Kangxin Highway
PuDong New District
SHANGHAI 201315, China
Telephone: +86 21 6105 6666

ABB Inc.
Robotics & Discrete Automation
1250 Brown Road
Auburn Hills, MI 48326
USA
Telephone: +1 248 391 9000

abb.com/robotics

3HAC050991-001, Rev W, en

© Copyright 2004-2025 ABB. All rights reserved.
Specifications subject to change without notice.