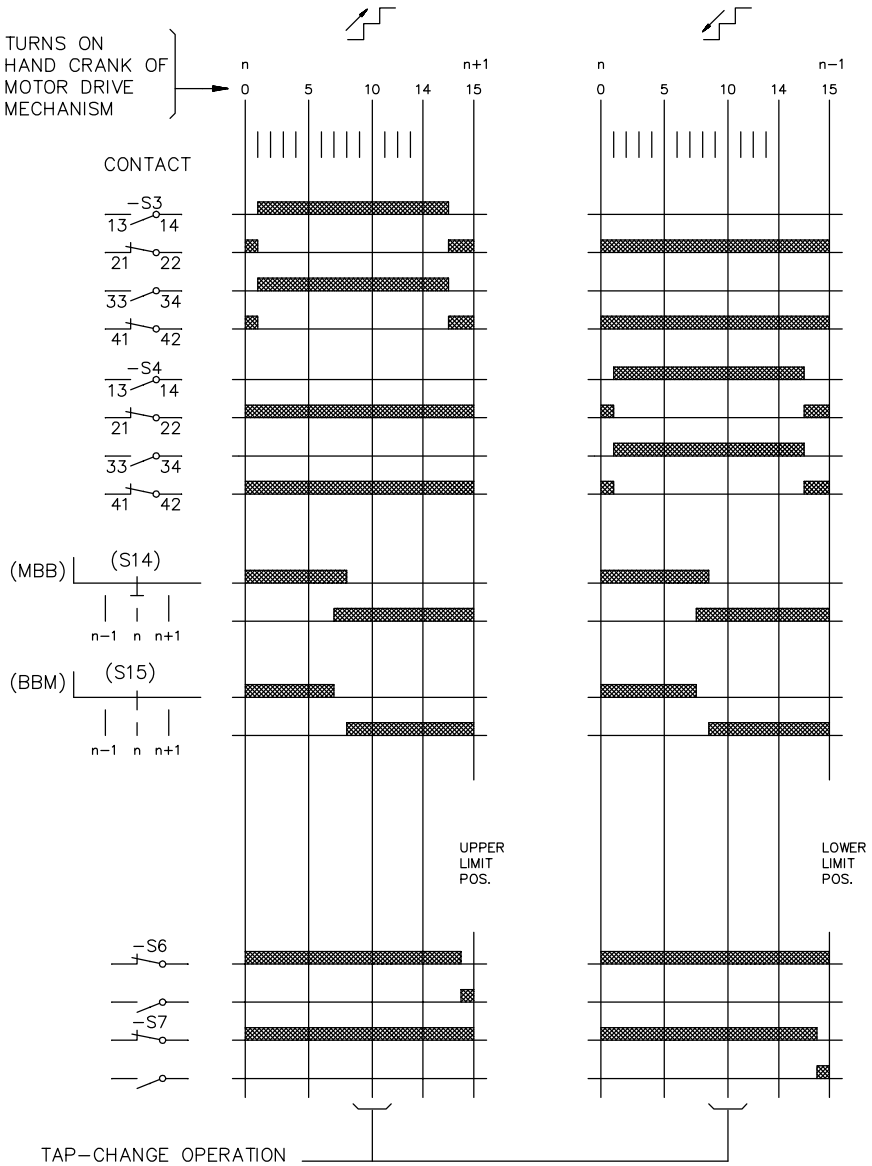

F2	Circuit breaker, control circuit
K1	Contactor, step−by−step operation
K2	Motor contactor
K3	Motor contactor
K601	Time relay, running−through protection
K602	Time relay, tap−change incomplete
K11	Contactor
M1	Motor
Q1	Protective motor switch
R1	Resistor
S1	Control selector switch
S2	Control switch
S3/S4	Cam operated contacts 33−34 Maintaining contact 41−42 Interlocking contact 13−14, 21−22 Auxiliary contact
S5	Interlocking switch, open when hand crank is fitted
S6/S7	Limit switch, upper/lower limit position
S8	Push button "EMERGENCY STOP"
S15	Continuation contact
X	Terminal board group
X3x	Internal Terminal board group

FOR HEATER, LIGHT CIRCUIT AND
TAP−POSITION TRANSMITTER No. S14 ETC,

SEE SEPARATE DIAGRAMS.

n → n+1 = 1 tap

n → n−1 = 1 tap

Towards upper limit pos.

Towards lower limit pos.

Remote control

Local control

Protective earth

Crank

We reserve all rights in this document and in the information contained therein. Reproduction, use or disclosure to third parties without express authority is strictly forbidden. © ABB Components AB

Based on	Prepared 2013−01−16 TOLA Approved 2013−01−21 THLA	Circuit Diagram Motor−Drive Mechanism TYPE BUL 2	Resp dept COM/CD Rev ind Lang Sheet 1 Cont 2 ABB 5483 538−600

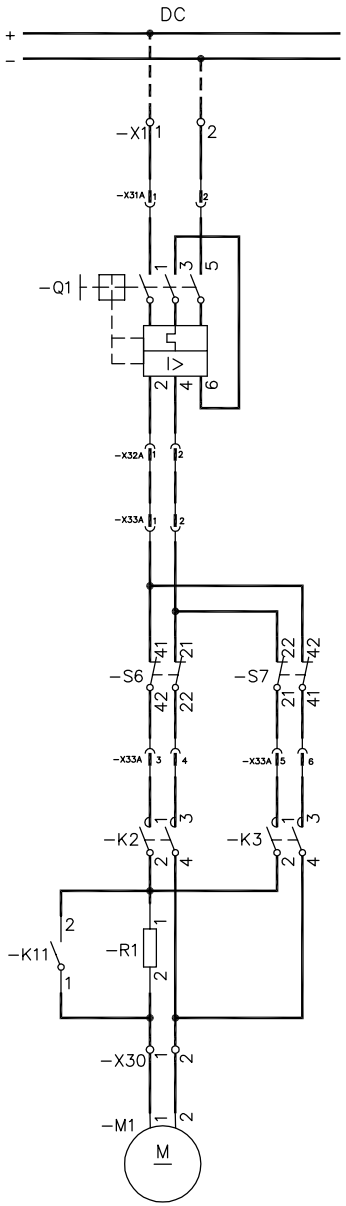

POWER SUPPLIES ACCORDING TO RATING PLATE OF TAP−CHANGER.

WIRING TABLE: 5483 482−DGL

Based on	Prepared 2013−01−16 TOLA	Circuit Diagram Motor−Drive Mechanism TYPE BUL 2		=MD
	Approved 2013−01−21 THLA		Resp dept COM/CD	Rev ind / Lang
		ABB	5483 538−600	Sheet 2 / Cont 3

We reserve all rights in this document and in the information contained therein. Reproduction, use or disclosure to third parties without express authority is strictly forbidden. © ABB Components AB

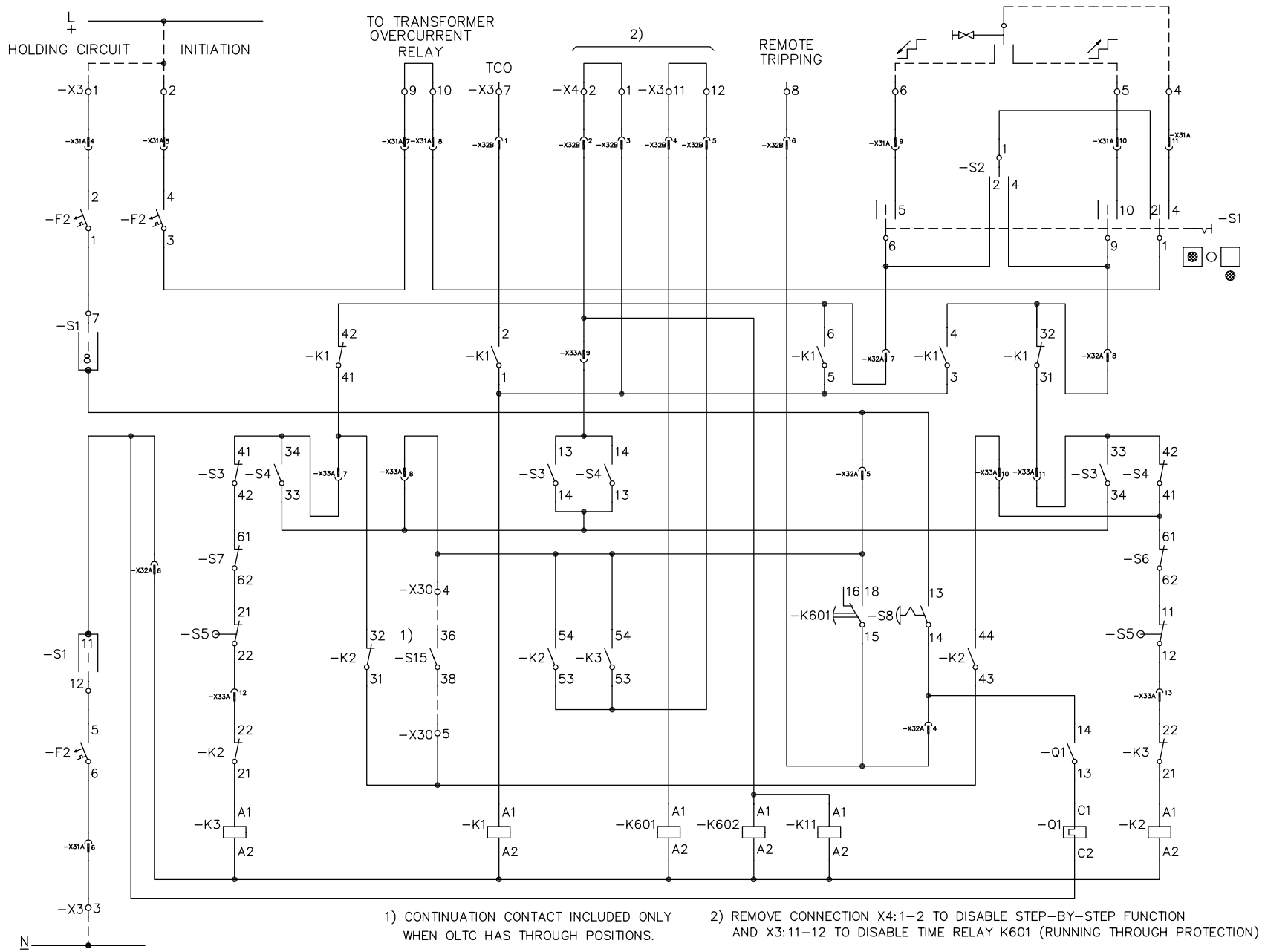

1) CONTINUATION CONTACT INCLUDED ONLY WHEN OLTC HAS THROUGH POSITIONS.

2) REMOVE CONNECTION X4:1–2 TO DISABLE STEP–BY–STEP FUNCTION AND X3:11–12 TO DISABLE TIME RELAY K601 (RUNNING THROUGH PROTECTION)

We reserve all rights in this document and in the information contained therein. Reproduction, use or disclosure to third parties without express authority is strictly forbidden. © ABB Components AB

Based on	Prepared 2013–01–16 TOLA	Circuit Diagram Motor–Drive Mechanism TYPE BUL 2		=MD
	Approved 2013–01–21 THLA		Resp dept COM/CD	Rev ind / Lang
		ABB	5483 538–600	Sheet 3 / Cont 4

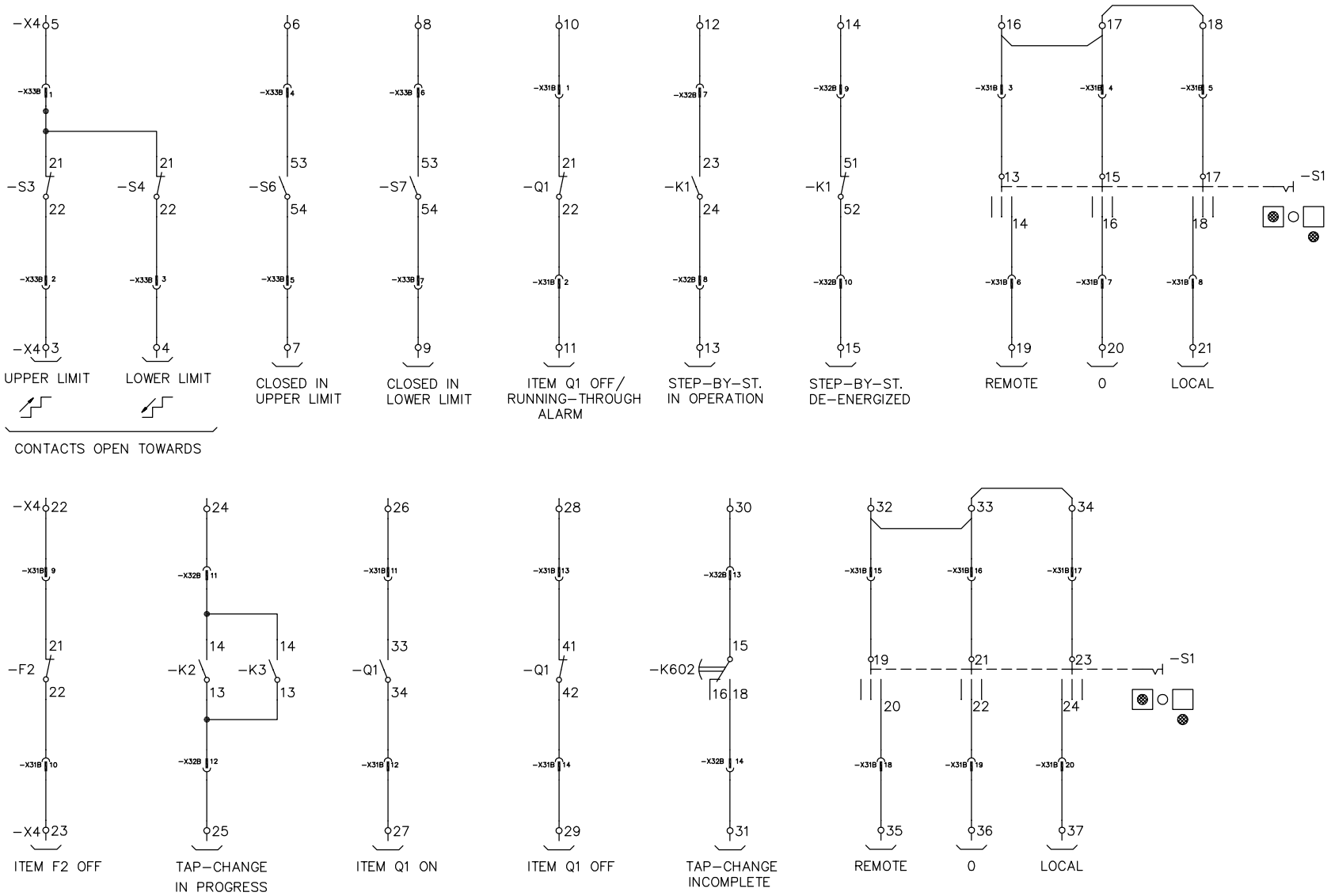

We reserve all rights in this document and in the information contained therein. Reproduction, use or disclosure to third parties without express authority is strictly forbidden. © ABB Components AB

Based on	Prepared 2013-01-16 TOLA	Circuit Diagram Motor-Drive Mechanism TYPE BUL 2	=MD	
	Approved 2013-01-21 THLA		Resp dept COM/CD	Rev ind / Lang
		ABB	5483 538-600	Sheet 4 / Cont –