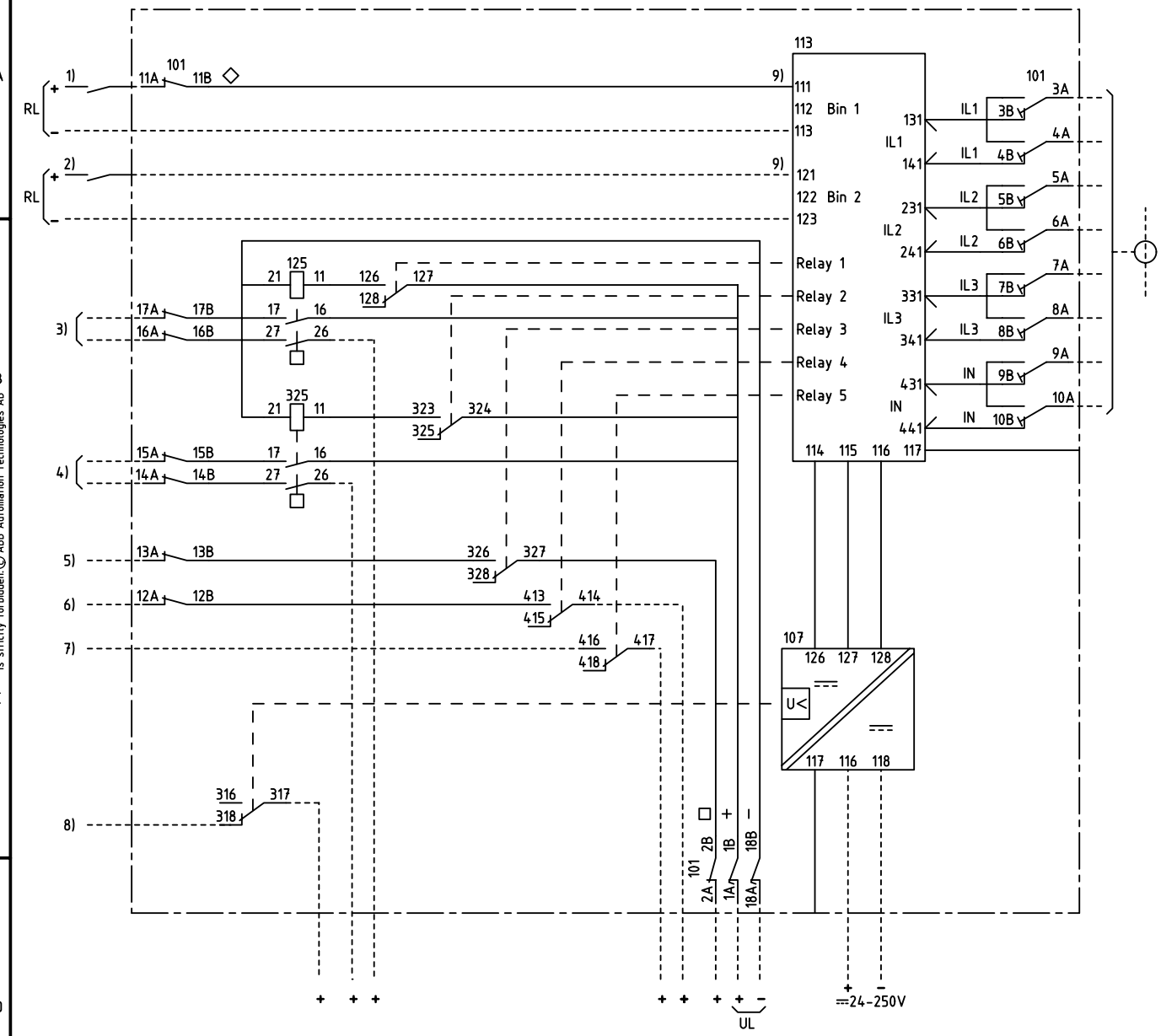

MULTI-FUNCTION CURRENT PROTECTION

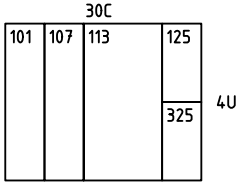

101	RTXP 18
107	RXTUG 22H
113	RXHL 411
125,325	RXME 18

1), 2) BINARY INPUT, PROGRAMMABLE

3)-7) RELAY OUTPUTS 1-5, PROGRAMMABLE FUNCTION

8) LOSS OF AUXILIARY VOLTAGE

9) CONNECTED FOR RL=110-220V DC
CHANGE FROM 111 TO 112 AND 121 TO 122 AT RL=48-60V DC

PROGRAMMABLE FUNCTIONS FOR BINARY INPUTS:
BLOCKING/ENABLING I>, I>>, I>>>, IN>, IN>>, IN>>>
THERMAL RESET θ, BREAKER FAILURE EXTERNAL START;
ALTERNATIVE SETTINGS; RESET OF LED INDICATIONS.

PROGRAMMABLE FUNCTIONS FOR BINARY OUTPUTS:
START AND TRIP I>, I>>, I>>>, IN>, IN>>, IN>>>;
THERMAL ALARM θ; THERMAL TRIP θ;
BREAKER FAILURE RE-TRIP; BREAKER FAILURE BACK-UP TRIP;
ALTERNATIVE SETTINGS; IN SERVICE

BINARY INPUT OPTIONS:
CIRCUIT-BREAKER CLOSED; CIRCUIT-BREAKER READY;
BLOCKING OF AUTORECLOSING; AUTORECLOSING EXTERNAL ON.

BINARY OUTPUT OPTIONS:
AUTORECLOSING ON; AUTORECLOSING READY;
AUTORECLOSING STARTED;
AUTORECLOSING PULSE TO CIRCUIT-BREAKER;
AUTORECLOSING UNSUCCESSFUL; INTENTIONAL OVERREACH TRIP.

1MRK 001 082-HA

We reserve all rigths in this document and in the information contained therein. Reproduction, use or disclosure to third parties without express authority is strictly forbidden. © ABB Automation Technologies AB

Customer drw no	Prep.	PTUA/ TPTD	H Raza/JE	1999-09-27	Circuit Diagram
	Appr.	PTUA/	Roger Karlsson	1999-09-27	Multi-f current prot.
	Resp. dept	PTUA/ TPTD			
Based on	ABB Automation Technologies				Documentnumber 1MRK001083-HA

Lang.	Rev.	Sheet	Cont. sh/ No of sh
en	1	1	

Documentstatus: Approved