3D Model is the Master Document of Record
Article or Material Must Conform to REACH Procedure S900000 Sec.15
Part Must Conform to S900000 Sec.16 Prop65 Procedure S900000 Sec.13
Part Must Conform to S900000 Sec.4 Toxicity Procedure
Geometric Dimensioning & Tolerancing per ASME Y14.5-2009

NEMA 4 AND 12
SAME AS 3R EXCEPT AS SHOWN

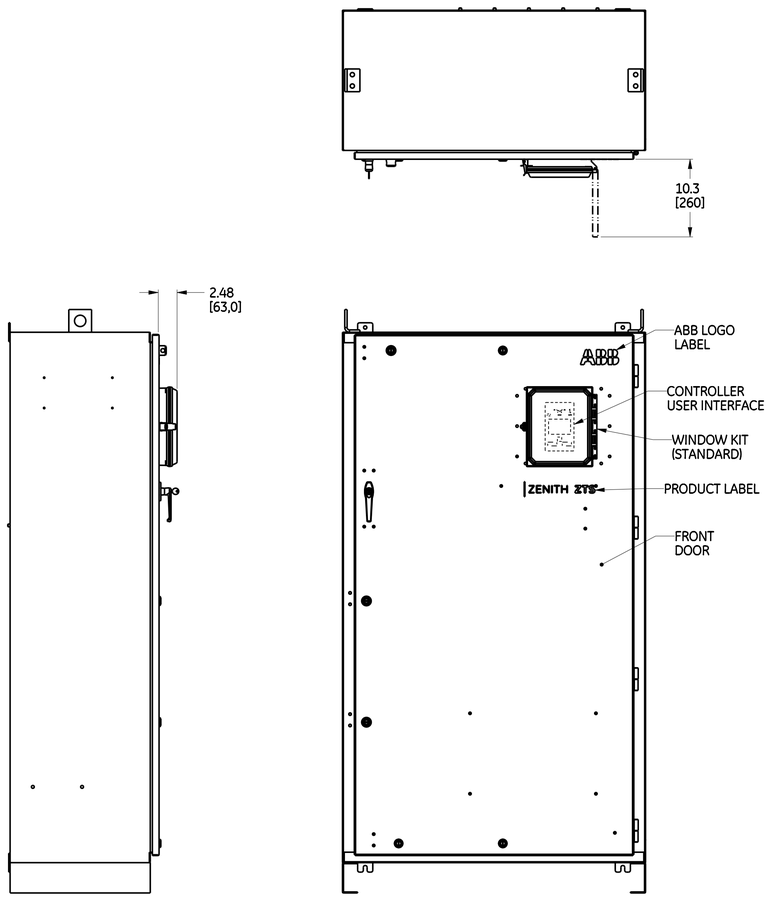

SIDE VIEW

FRONT VIEW

NEMA 3R

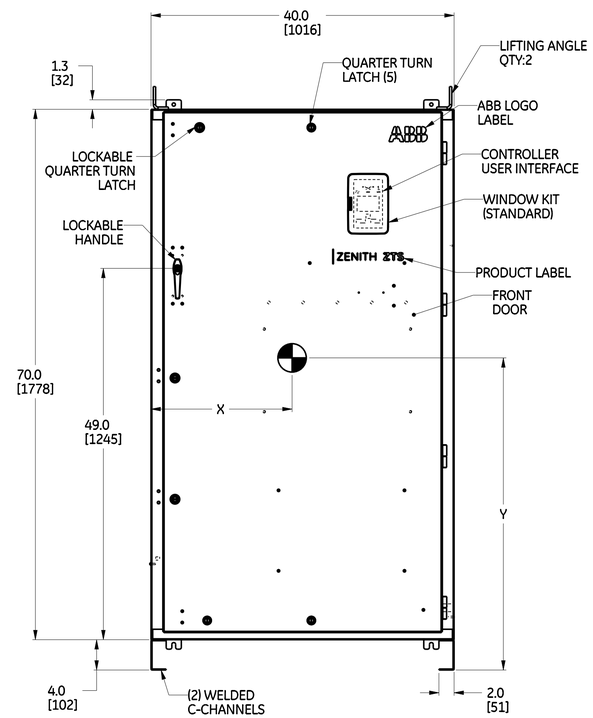

FRONT VIEW

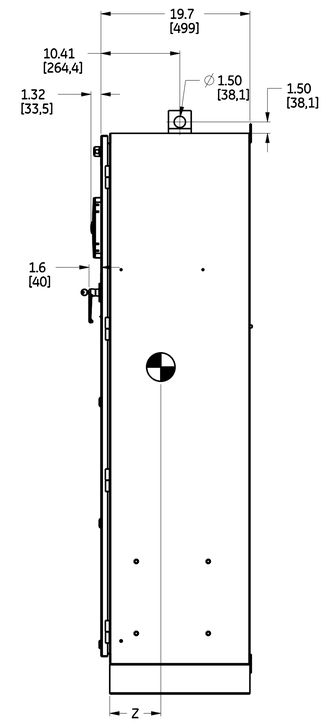

SIDE VIEW

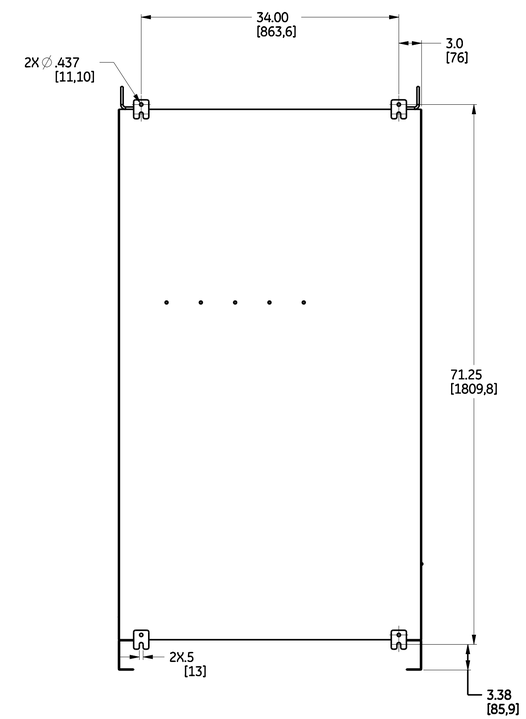

REAR VIEW

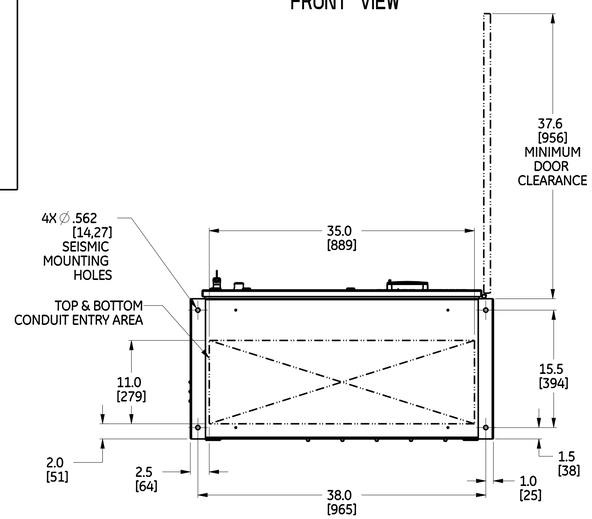

BOTTOM VIEW

NOTES
1. ENCLOSURE : NEMA-3R,4,12 TYPE, FREE STANDING, FLOOR MOUNT.
2. MATERIAL:12 GA (.105) 1018 HRS REF.
3. FINISH : ANSI 61 GREY
4. CONSTRUCTION PER UL 1008 STANDARD.
5. FRONT ACCESSIBLE UNIT. NO SIDE OR REAR ACCESS REQUIRED.
6. SUITABLE WIRE BENDING SPACE PROVIDED PER THE SAFETY AGENCY STANDARDS.
7. UL AND CSA RECOGNIZED/CERTIFIED MECHANICAL LUGS ARE STANDARD.
8. UL AND CSA RECOGNIZED/CERTIFIED COMPRESSION LUGS ARE AVAILABLE AS OPTION.
9. EQUIPMENT GROUND LUG IS PROVIDED IN ALL UNITS. REFER SHEET 2 FOR DETAILS.
10.ALL DIMENSIONS ARE FOR REFERENCE ONLY AND SHOWN IN INCHES(MILLIMETERS).
11.100% RATED SOLID/SWITCHED NEUTRAL PROVIDED PER THE SWITCH CONFIGURATION.
12.SUITABLE FOR TOP AND/OR BOTTOM CABLE ENTRY.
13.FOR CABLE CONNECTIONS TO MECHANICAL LUG, REFER O&M MANUAL FOR TORQUE DETAILS
14.FOR WORKING CLEARANCE REFER TO NATIONAL AND LOCAL CODES AND STANDARDS.

SEISMIC NOTES:

1. BOLT ENCLOSURE FROM C-CHANNEL BASE USING THE FOLLOWING SEISMIC CERTIFIED MOUNTING HARDWARE PER MOUNTING HOLE: (HARDWARE PROVIDED BY INSTALLER).
   *1/2-13 GRADE 5 BOLT TORQUE TO 75 FT-LBS. (102 NEWTON METERS).
   *1/2-13 STANDARD FLAT WASHER.
   *1/2 (13) HELICAL SPRING LOCK WASHER.
2. CENTER OF GRAVITY DIMENSIONS ARE FOR REFERENCE ONLY.

	AMP	POLE	CONTROLLER TYPE	CABINET #	LUG RANGE
MECHANICAL LUG ASSEMBLY	800-1200A	3	SEE TABLE A	F-2017MP	QTY 4 2 AWG-600 KCMIL
		4			
COMPRESSION LUG ASSEMBLY	800A	3			QTY 3 500 KCMIL
		4			
	1200A	3			QTY 4 500 KCMIL
		4			

TABLE A - HMI			
TYPE	TRANSITION	LEVEL	PART NO.
ZTS	OPEN	4	OXAMII-L4
ZTSD	DELAYED	4	OXBMII-L4

POLE	WEIGHT	CENTER OF GRAVITY IN(MM)		
	LB(KG)	X	Y	Z
3	544(247)	20.4 (518)	38.6 (980)	9.6 (246)
4	587(266)			

ABB PROPRIETARY AND CONFIDENTIAL INFORMATION
The information contained in this document is to be kept strictly confidential.
Any unauthorized ABB proprietary information in this document is strictly forbidden.
ABB reserves all rights regarding intellectual Property Rights.
Copyright 2021 ABB. All rights reserved

Third Angle Projection

DRAWING FILE 50C-1086	MODEL FILE 50C-1086	ABB	
DATE MODIFIED 29-Mar-21 10:11:23 AM	DESIGNED BY SK		
Calculated for: VOLUME 0.000 in^3	CN# C108929	APPROVED BY SR	TITLE ZTS(D) 800-1200A, TYPE 3R,4,12
	◇ Critical to Quality Characteristic		
MASS 0.000 lbm	MATERIAL SPECIFICATION ----	FINISH SPECIFICATION ----	UNITS in / LOCAL TITLE ----
UNLESS OTHERWISE SPECIFIED	MATERIAL DESCRIPTION ---		SIZE D / ROOT NUMBER 50C-1086 / REV 1 / RELEASE STATE Released
TOLERANCE ON: 1 PL DECIMALS ± 0.1, 2 PL DECIMALS ± 0.02, 3 PL DECIMALS ± 0.005, ANGLES ± 10°	FINISH DESCRIPTION ---		SCALE 13:100 / PRODUCT LINE ZENITH ZTS T-SERIES / SHEET 1 of 3

us_3rd_d.frm

CABINET WITH MECHANICAL LUG ASSEMBLY
(AVAILABLE AS STANDARD)

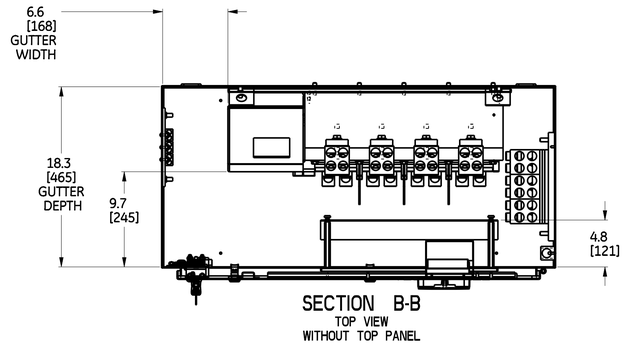

SECTION B-B
TOP VIEW
WITHOUT TOP PANEL

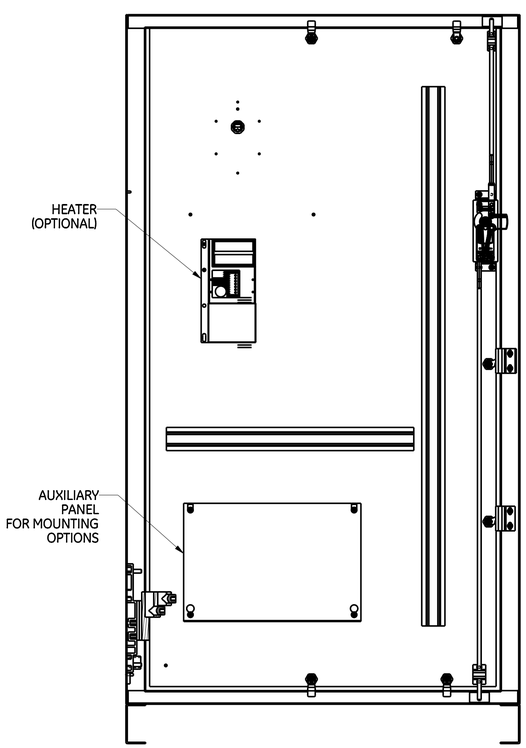

SECTION C-C
DOOR INSIDE VIEW

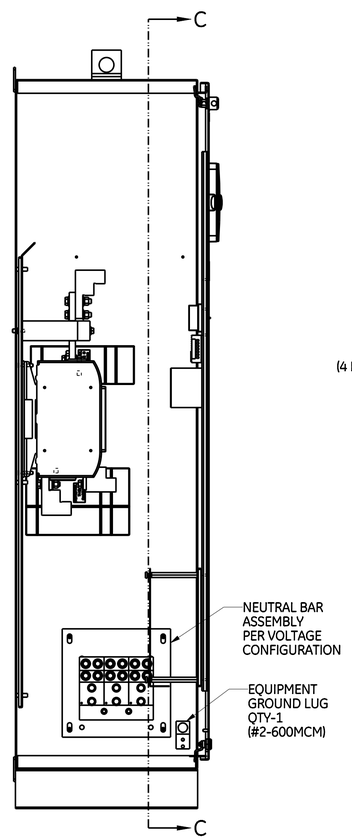

SECTION A-A
LEFT SIDE
WITHOUT SIDE PANEL

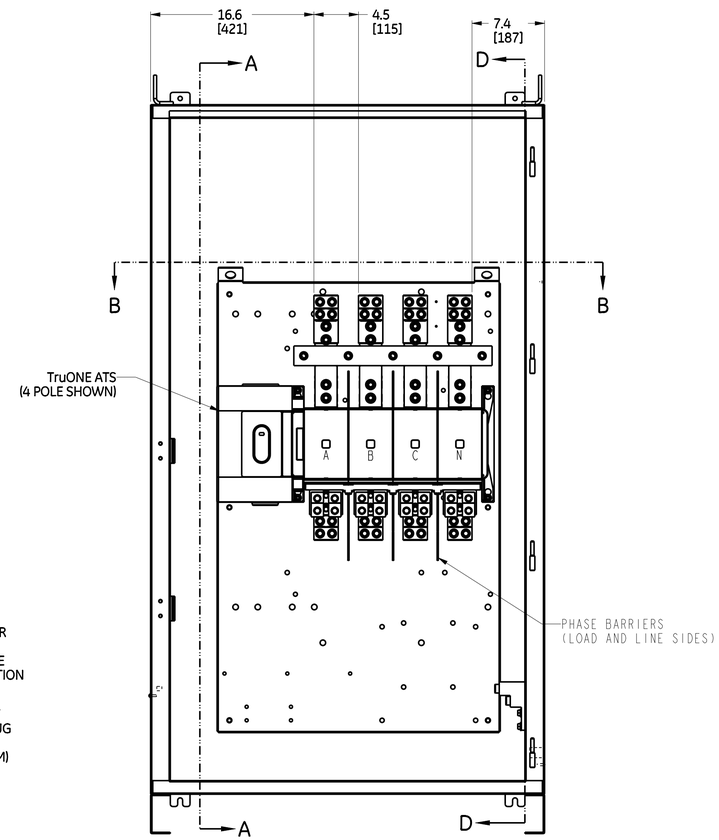

FRONT VIEW
WITHOUT DOOR
(4 POLE SWITCH SHOWN)

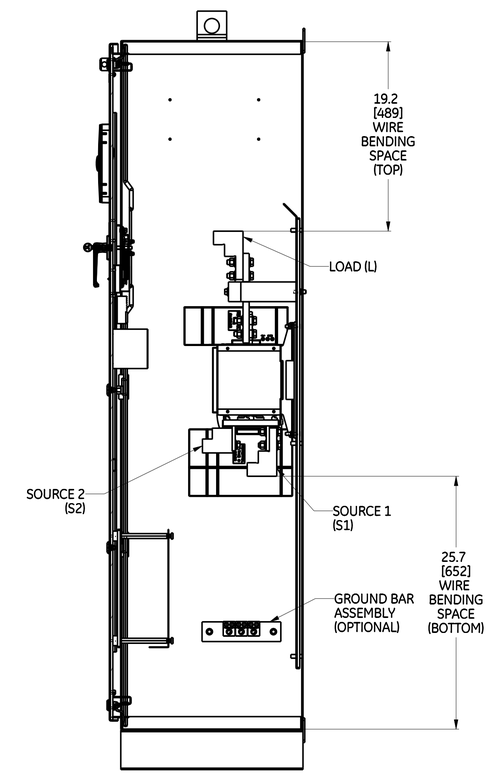

SECTION D-D
RIGHT SIDE
WITHOUT SIDE PANEL

NOTE:
1. REFER TO SHEET (1) FOR COMPLETE NOTE DETAILS
2. MECHANICAL LUGS SHOWN IN ABOVE VIEWS ARE FOR REFERENCE ONLY.

NOTE:

FOR SINGLE PHASE SWITCHED NEUTRAL(3-POLE) UNIT,THE NEUTRAL POLE WILL BE NEXT TO MECHANISM AND PHASE A AND PHASE B POLES WILL BE NEXT TO NEUTRAL POLE

ABB PROPRIETARY AND CONFIDENTIAL INFORMATION
The information contained in this document has to be kept strictly confidential.
Any unauthorized use or disclosure of this document or any part of its contents is strictly forbidden.
ABB reserves all rights regarding intellectual Property Rights.
Copyright © 2021 ABB. All rights reserved

Third Angle Projection

ABB		
SIZE D	NUMBER 50C-1086	REV 1
SCALE 13:100	PRODUCT LINE ZENITH ZTS T-SERIES	SHEET 2 of 3

CABINET WITH COMPRESSION LUG ASSEMBLY
(AVAILABLE AS OPTION)

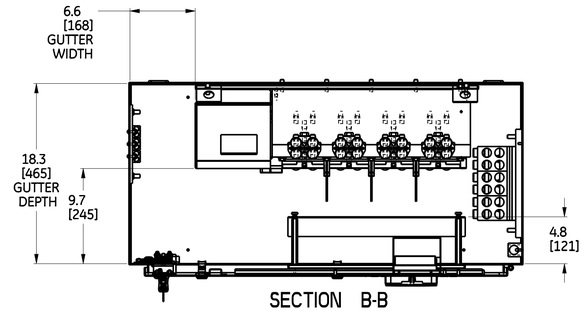

SECTION B-B
TOP VIEW
WITHOUT TOP PANEL

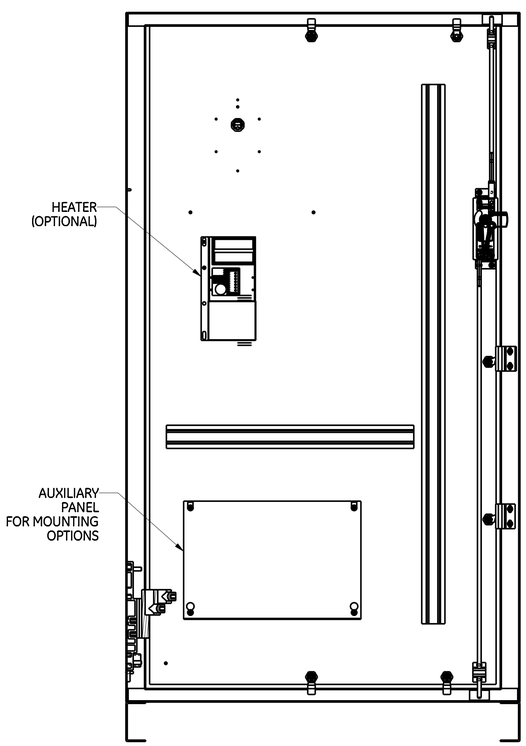

SECTION C-C
DOOR INSIDE VIEW

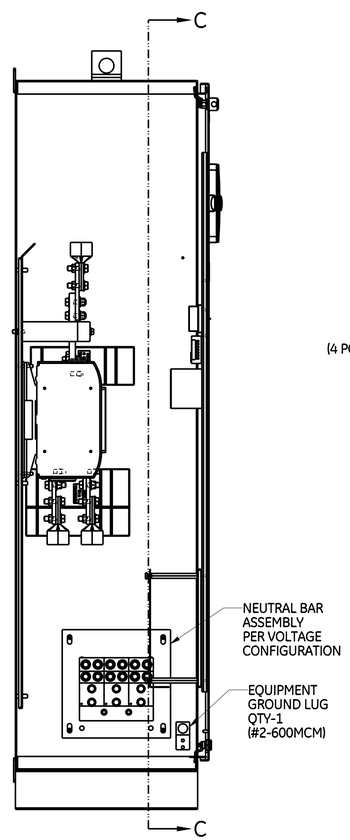

SECTION A-A
LEFT SIDE
WITHOUT SIDE PANEL

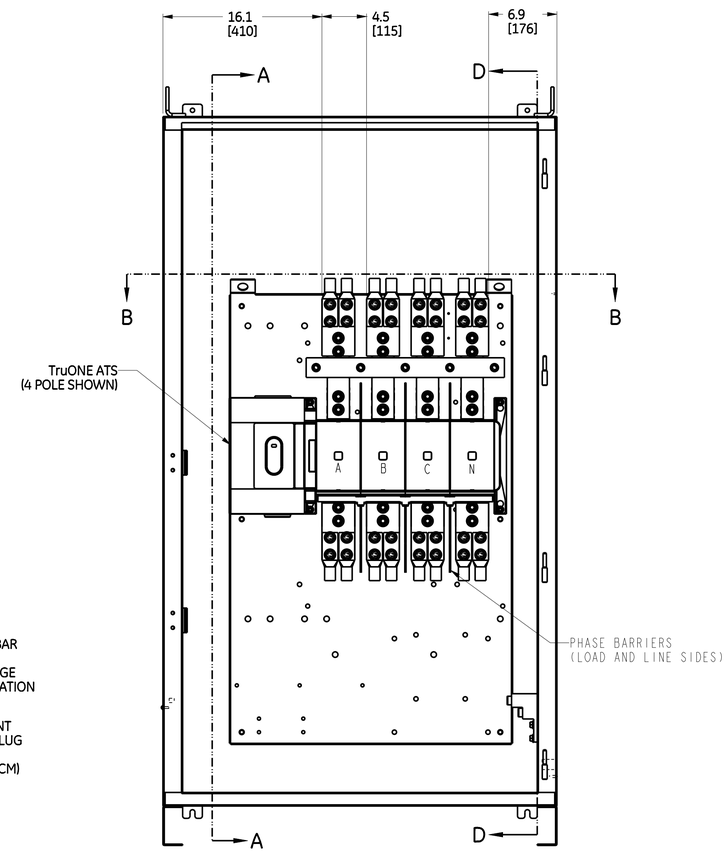

FRONT VIEW
WITHOUT DOOR
(4 POLE SWITCH SHOWN)

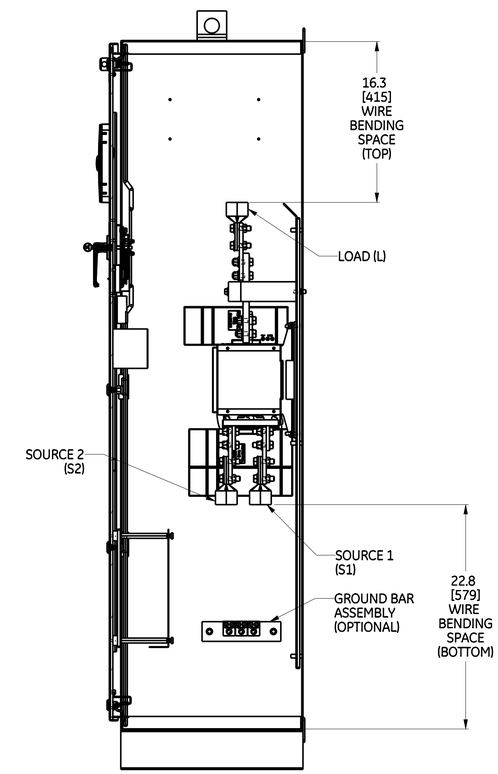

SECTION D-D
RIGHT SIDE
WITHOUT SIDE PANEL

NOTE:
1. REFER TO SHEET (1) FOR COMPLETE NOTE DETAILS
2. MECHANICAL LUGS SHOWN IN ABOVE VIEWS ARE FOR REFERENCE ONLY.

NOTE:

FOR SINGLE PHASE SWITCHED NEUTRAL(3-POLE) UNIT,THE NEUTRAL POLE WILL BE NEXT TO MECHANISM AND PHASE A AND PHASE B POLES WILL BE NEXT TO NEUTRAL POLE

ABB PROPRIETARY AND CONFIDENTIAL INFORMATION
The information contained in this document has to be kept strictly confidential.
Any unauthorized use or disclosure of this document or any part of its contents is strictly forbidden.
ABB reserves all rights regarding intellectual Property Rights.
Copyright © 2021 ABB. All rights reserved

Third Angle Projection

ABB		
SIZE D	NUMBER 50C-1086	REV 1
SCALE 13:100	PRODUCT LINE ZENITH ZTS T-SERIES	SHEET 3 of 3