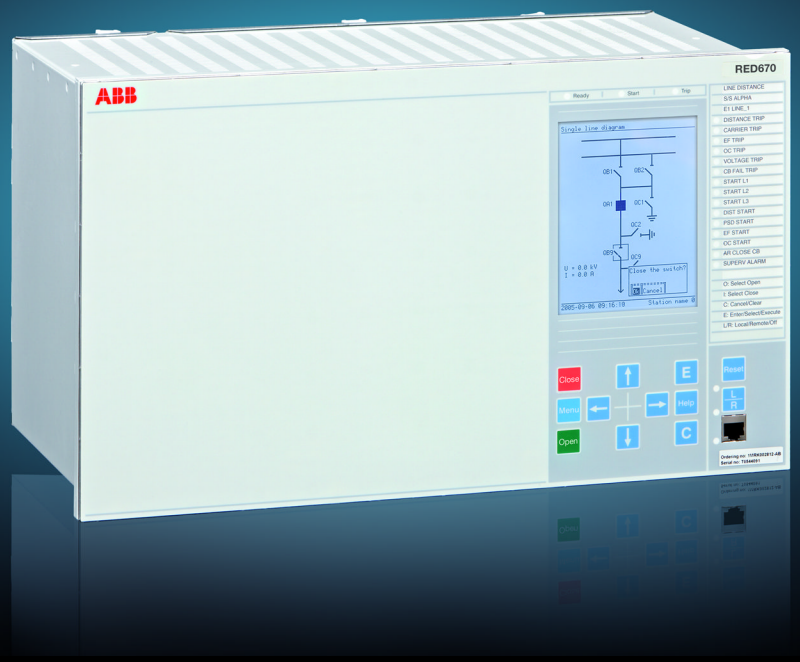

Relion® 670 series

Line differential protection RED670 ANSI
Application manual

Power and productivity
for a better world™

Document ID: 1MRK505225-UUS
Issued: February 2015
Revision: C
Product version: 1.2

Copyright

Trademarks

ABB and Relion are registered trademarks of the ABB Group. All other brand or product names mentioned in this document may be trademarks or registered trademarks of their respective holders.

Warranty

Please inquire about the terms of warranty from your nearest ABB representative.

ABB Inc.

1021 Main Campus Drive

Raleigh, NC 27606, USA

Toll Free: 1-800-HELP-365, menu option #8

ABB Inc.

3450 Harvester Road

Burlington, ON L7N 3W5, Canada

Toll Free: 1-800-HELP-365, menu option #8

ABB Mexico S.A. de C.V.

Paseo de las Americas No. 31 Lomas Verdes 3a secc.

53125, Naucalpan, Estado De Mexico, MEXICO

Phone: (+1) 440-585-7804, menu option #8

Disclaimer

The data, examples and diagrams in this manual are included solely for the concept or product description and are not to be deemed as a statement of guaranteed properties. All persons responsible for applying the equipment addressed in this manual must satisfy themselves that each intended application is suitable and acceptable, including that any applicable safety or other operational requirements are complied with. In particular, any risks in applications where a system failure and/or product failure would create a risk for harm to property or persons (including but not limited to personal injuries or death) shall be the sole responsibility of the person or entity applying the equipment, and those so responsible are hereby requested to ensure that all measures are taken to exclude or mitigate such risks.

This document has been carefully checked by ABB but deviations cannot be completely ruled out. In case any errors are detected, the reader is kindly requested to notify the manufacturer. Other than under explicit contractual commitments, in no event shall ABB be responsible or liable for any loss or damage resulting from the use of this manual or the application of the equipment.

Conformity

This product complies with the directive of the Council of the European Communities on the approximation of the laws of the Member States relating to electromagnetic compatibility (EMC Directive 2004/108/EC) and concerning electrical equipment for use within specified voltage limits (Low-voltage directive 2006/95/EC). This conformity is the result of tests conducted by ABB in accordance with the product standards EN 50263 and EN 60255-26 for the EMC directive, and with the product standards EN 60255-1 and EN 60255-27 for the low voltage directive. The product is designed in accordance with the international standards of the IEC 60255 series and ANSI C37.90.

Table of contents

Section 1 Introduction

About this chapter

This chapter introduces the user to the manual as such.

1.1 Introduction to the application manual

1.1.1 About the complete set of manuals for an IED

The user's manual (UM) is a complete set of five different manuals:

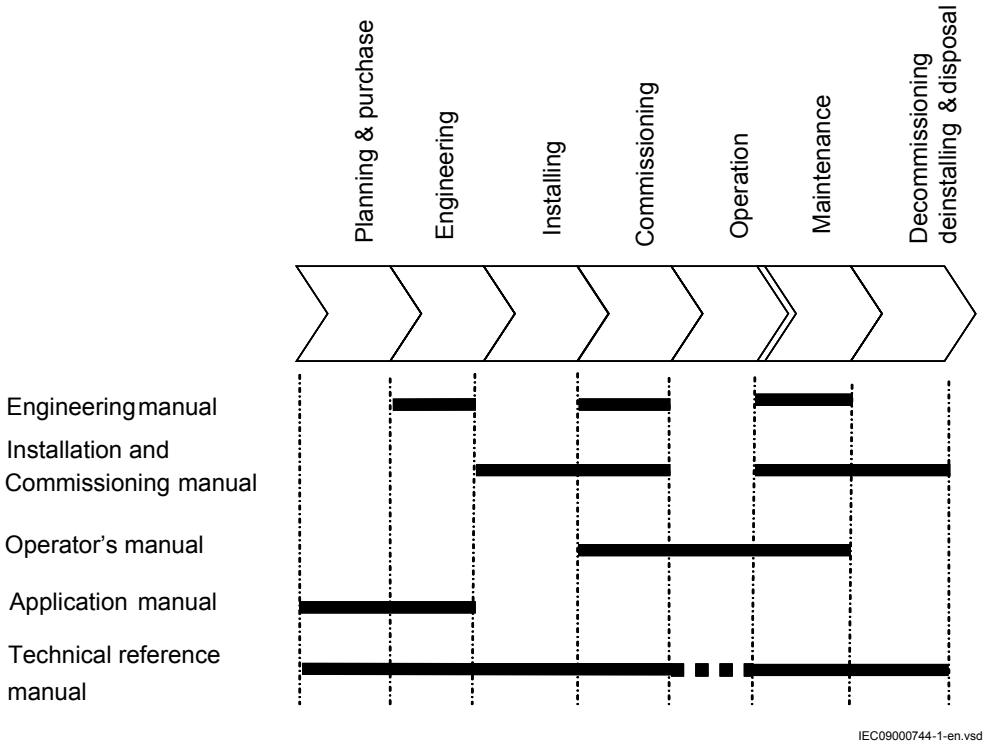

The Application Manual (AM) contains application descriptions, setting guidelines and setting parameters sorted per function. The application manual should be used to find out when and for what purpose a typical protection function could be used. The manual should also be used when calculating settings.

The Technical Reference Manual (TRM) contains application and functionality descriptions and it lists function blocks, logic diagrams, input and output signals, setting parameters and technical data sorted per function. The technical reference manual should be used as a technical reference during the engineering phase, installation and commissioning phase, and during normal service.

The Installation and Commissioning Manual (ICM) contains instructions on how to install and commission the protection IED. The manual can also be used as a reference during periodic testing. The manual covers procedures for mechanical and electrical installation, energizing and checking of external circuitry, setting and configuration as well as verifying settings and performing directional tests. The chapters are organized in the chronological order (indicated by chapter/section numbers) in which the protection IED should be installed and commissioned.

The Operator's Manual (OM) contains instructions on how to operate the protection IED during normal service once it has been commissioned. The operator's manual can be used to find out how to handle disturbances or how to view calculated and measured network data in order to determine the cause of a fault.

The Engineering Manual (EM) contains instructions on how to engineer the IEDs using the different tools in PCM600. The manual provides instructions on how to set up a PCM600 project and insert IEDs to the project structure. The manual also recommends a sequence for engineering of protection and control functions, LHMI functions as well as communication engineering for IEC 61850 and DNP3.

1.1.2 About the application manual

The application manual contains the following chapters:

- The chapter *"Requirements"* describes current and voltage transformer requirements.
- The chapter *"IED application"* describes the use of the included software functions in the IED. The chapter discusses application possibilities and gives guidelines for calculating settings for a particular application.
- The chapter *"Station communication"* describes the communication possibilities in a SA-system.
- The chapter *"Remote communication"* describes the remote end data communication possibilities through binary signal transferring.
- The chapter *"Configuration"* describes the preconfiguration of the IED and its complements.
- The chapter *"Glossary"* is a list of terms, acronyms and abbreviations used in ABB technical documentation.

1.1.3 Intended audience

General

The application manual is addressing the system engineer/technical responsible that is responsible for specifying the application of the IED.

Requirements

The system engineer/technical responsible must have a good knowledge about protection systems, protection equipment, protection functions and the configured functional logics in the protection.

1.1.4 Related documents

Documents related to RED670	Identity number
Operator's manual	1MRK 505 223-UUS
Installation and commissioning manual	1MRK 505 224-UUS
Technical reference manual	1MRK 505 222-UUS
Application manual	1MRK 505 225-UUS
Product guide customized	1MRK 505 226-BUS
Product guide pre-configured	1MRK 505 228-BUS
Sample specification	SA2005-001281
Connection and Installation components	1MRK 513 003-BEN
Test system, COMBITEST	1MRK 512 001-BEN
Accessories for 670 series IEDs	1MRK 514 012-BEN
670 series SPA and signal list	1MRK 500 092-WUS
IEC 61850 Data objects list for 670 series	1MRK 500 091-WUS
Engineering manual 670 series	1MRK 511 240-UUS
Communication set-up for Relion 670 series	1MRK 505 260-UEN

More information can be found on www.abb.com/substationautomation.

1.1.5 Revision notes

Revision	Description
A	Minor corrections made
B	Maintenance updates, PR corrections
C	Maintenance updates, PR corrections

Section 2 Requirements

About this chapter

This chapter describes current and voltage transformer requirements.

2.1 Current transformer requirements

The performance of a protection function will depend on the quality of the measured current signal. Saturation of the current transformer (CT) will cause distortion of the current signal and can result in a failure to operate or cause unwanted operations of some functions. Consequently CT saturation can have an influence on both the dependability and the security of the protection. This protection IED has been designed to permit heavy CT saturation with maintained correct operation.

2.1.1 Current transformer classification

To guarantee correct operation, the current transformers (CTs) must be able to correctly reproduce the current for a minimum time before the CT will begin to saturate. To fulfill the requirement on a specified time to saturation the CTs must fulfill the requirements of a minimum secondary e.m.f. that is specified below.

There are several different ways to specify CTs. Conventional magnetic core CTs are usually specified and manufactured according to some international or national standards, which specify different protection classes as well. There are many different standards and a lot of classes but fundamentally there are three different types of CTs:

- High remanence type CT
- Low remanence type CT
- Non remanence type CT

The high remanence type has no limit for the remanent flux. This CT has a magnetic core without any airgap and a remanent flux might remain almost infinite time. In this type of transformers the remanence can be up to around 80% of the saturation flux. Typical examples of high remanence type CT are class P, PX, TPS, TPX according to IEC, class P, X according to BS (old British Standard) and non gapped class C, K according to ANSI/IEEE.

The low remanence type has a specified limit for the remanent flux. This CT is made with a small air gap to reduce the remanence to a level that does not exceed 10% of the saturation flux. The small air gap has only very limited influences on the other properties of the CT. Class PR, TPY according to IEC are low remanence type CTs.

The non remanence type CT has practically negligible level of remanent flux. This type of CT has relatively big air gaps in order to reduce the remanence to practically zero level. In the same time, these air gaps reduce the influence of the DC-component from the primary fault current. The air gaps will also decrease the measuring accuracy in the non-saturated region of operation. Class TPZ according to IEC is a non remanence type CT.

Different standards and classes specify the saturation e.m.f. in different ways but it is possible to approximately compare values from different classes. The rated equivalent limiting secondary e.m.f. E_{al} according to the IEC 60044 – 6 standard is used to specify the CT requirements for the IED. The requirements are also specified according to other standards.

2.1.2 Conditions

The requirements are a result of investigations performed in our network simulator. The current transformer models are representative for current transformers of high remanence and low remanence type. The results may not always be valid for non remanence type CTs (TPZ).

The performances of the protection functions have been checked in the range from symmetrical to fully asymmetrical fault currents. Primary time constants of at least 120 ms have been considered at the tests. The current requirements below are thus applicable both for symmetrical and asymmetrical fault currents.

Depending on the protection function phase-to-ground, phase-to-phase and three-phase faults have been tested for different relevant fault positions for example, close in forward and reverse faults, zone 1 reach faults, internal and external faults. The dependability and security of the protection was verified by checking for example, time delays, unwanted operations, directionality, overreach and stability.

The remanence in the current transformer core can cause unwanted operations or minor additional time delays for some protection functions. As unwanted operations are not acceptable at all maximum remanence has been considered for fault cases critical for the security, for example, faults in reverse direction and external faults. Because of the almost negligible risk of additional time delays and the non-existent risk of failure to operate the remanence have not been considered for the dependability cases. The requirements below are therefore fully valid for all normal applications.

It is difficult to give general recommendations for additional margins for remanence to avoid the minor risk of an additional time delay. They depend on the performance and economy requirements. When current transformers of low remanence type (for example, TPY, PR) are used, normally no additional margin is needed. For current transformers of high remanence type (for example, P, PX, TPS, TPX) the small probability of fully asymmetrical faults, together with high remanence in the same direction as the flux generated by the fault, has to be kept in mind at the decision of an additional margin. Fully asymmetrical fault current will be achieved when the fault occurs at approximately zero voltage (0°). Investigations have shown that 95% of the faults in the network will occur when the voltage is between 40° and 90°. In addition fully asymmetrical fault current will not exist in all phases at the same time.

2.1.3 Fault current

The current transformer requirements are based on the maximum fault current for faults in different positions. Maximum fault current will occur for three-phase faults or single phase-to-ground faults. The current for a single phase-to-ground fault will exceed the current for a three-phase fault when the zero sequence impedance in the total fault loop is less than the positive sequence impedance.

When calculating the current transformer requirements, maximum fault current for the relevant fault position should be used and therefore both fault types have to be considered.

2.1.4 Secondary wire resistance and additional load

The voltage at the current transformer secondary terminals directly affects the current transformer saturation. This voltage is developed in a loop containing the secondary wires and the burden of all relays in the circuit. For ground faults the loop includes the phase and neutral wire, normally twice the resistance of the single secondary wire. For three-phase faults the neutral current is zero and it is just necessary to consider the resistance up to the point where the phase wires are connected to the common neutral wire. The most common practice is to use four wires secondary cables so it normally is sufficient to consider just a single secondary wire for the three-phase case.

The conclusion is that the loop resistance, twice the resistance of the single secondary wire, must be used in the calculation for phase-to-ground faults and the phase resistance, the resistance of a single secondary wire, may normally be used in the calculation for three-phase faults.

As the burden can be considerable different for three-phase faults and phase-to-ground faults it is important to consider both cases. Even in a case where the phase-to-ground fault current is smaller than the three-phase fault current the phase-to-ground fault can be dimensioning for the CT depending on the higher burden.

In isolated or high impedance grounded systems the phase-to-ground fault is not the dimensioning case and therefore the resistance of the single secondary wire always can be used in the calculation, for this case.

2.1.5 General current transformer requirements

The current transformer ratio is mainly selected based on power system data for example, maximum load. However, it should be verified that the current to the protection is higher than the minimum operating value for all faults that are to be detected with the selected CT ratio. The minimum operating current is different for different functions and normally settable so each function should be checked.

The current error of the current transformer can limit the possibility to use a very sensitive setting of a sensitive residual overcurrent protection. If a very sensitive setting of this function will be used it is recommended that the current transformer should have an accuracy class which have an current error at rated primary current that is less than ±1% (for example, 5P). If current transformers with less accuracy are used it is advisable to check the actual unwanted residual current during the commissioning.

2.1.6 Rated equivalent secondary e.m.f. requirements

With regard to saturation of the current transformer all current transformers of high remanence and low remanence type that fulfill the requirements on the rated equivalent secondary e.m.f. E_{al} below can be used. The characteristic of the non remanence type CT (TPZ) is not well defined as far as the phase angle error is concerned. If no explicit recommendation is given for a specific function we therefore recommend contacting ABB to confirm that the non remanence type can be used.

The CT requirements for the different functions below are specified as a rated equivalent limiting secondary e.m.f. E_{al} according to the IEC 60044-6 standard. Requirements for CTs specified in different ways are given at the end of this section.

2.1.6.1 Line differential protection

The current transformers must have a rated equivalent secondary e.m.f. E_{al} that is larger than the maximum of the required secondary e.m.f. E_{alreq} below:

$$E_{al} \geq E_{alreq} = I_{kmax} \cdot \frac{I_{sn}}{I_{pn}} \cdot \left(R_{CT} + R_L + \frac{S_R}{I_n^2} \right)$$

(Equation 1)

$$E_{al} \geq E_{alreq} = 2 \cdot I_{tmax} \cdot \frac{I_{sn}}{I_{pn}} \cdot \left(R_{CT} + R_L + \frac{S_R}{I_n^2} \right)$$

(Equation 2)

where:

I_{kmax}	Maximum primary fundamental frequency fault current for internal close-in faults (A)
I_{tmax}	Maximum primary fundamental frequency fault current for through fault current for external faults (A)
I_{pn}	The rated primary CT current (A)
I_{sn}	The rated secondary CT current (A)
I_n	The nominal current of the protection IED (A)
R_{CT}	The secondary resistance of the CT (Ω)
R_L	The resistance of the secondary wire and additional load (Ω). The loop resistance containing the phase and neutral wires must be used for faults in solidly grounded systems. The resistance of a single secondary wire should be used for faults in high impedance grounded systems.
S_R	The burden of an IED current input channel (VA). S_R=0.020 VA/channel for I_r=1 A and S_r=0.150 VA/channel for I_r=5 A

In substations with breaker-and-a-half or double-busbar double-breaker arrangement, the through fault current may pass two main CTs for the line differential protection without passing the protected line. In such cases and if both main CTs have equal ratios and magnetization characteristics the CTs must satisfy equation 1 and equation 3.

$$E_{al} \geq E_{alreq} = I_{tfdb} \cdot \frac{I_{sn}}{I_{pn}} \cdot \left(R_{CT} + R_L + \frac{S_R}{I_n^2} \right)$$

(Equation 3)

where:

I_{tfdb}	Maximum primary fundamental frequency through fault current that passes two main CTs (breaker-and-a-half or double-breaker) without passing the protected line (A)

If a power transformer is included in the protected zone of the line differential protection the CTs must also fulfill equation 4.

$$E_{al} \geq E_{alreq} = 30 \cdot I_{nt} \cdot \frac{I_{sn}}{I_{pn}} \cdot \left(R_{CT} + R_L + \frac{S_R}{I_n^2} \right)$$

(Equation 4)

where:

I_{nt} The rated primary current of the power transformer (A)

2.1.6.2 Distance protection

The current transformers must have a rated equivalent secondary e.m.f. E_{al} that is larger than the maximum of the required secondary e.m.f. E_{alreq} below:

$$E_{al} \geq E_{alreq} = \frac{I_{kmax} \cdot I_{sn}}{I_{pn}} \cdot \left(R_{CT} + R_L + \frac{S_R}{I_n^2} \right)$$

(Equation 5)

$$E_{al} \geq E_{alreq} = \frac{I_{kzone1} \cdot I_{sn}}{I_{pn}} \cdot \left(R_{CT} + R_L + \frac{S_R}{I_n^2} \right)$$

(Equation 6)

where:

I_{kmax}	Maximum primary fundamental frequency current for close-in forward and reverse faults (A)
I_{kzone1}	Maximum primary fundamental frequency current for faults at the end of zone 1 reach (A)
I_{pn}	The rated primary CT current (A)
I_{sn}	The rated secondary CT current (A)
I_n	The nominal current of the protection IED (A)
R_{CT}	The secondary resistance of the CT (Ω)
R_L	The resistance of the secondary wire and additional load (Ω). In solidly grounded systems the loop resistance containing the phase and neutral wires should be used for phase-to-ground faults and the resistance of the phase wire should be used for three-phase faults. In isolated or high impedance grounded systems the resistance of the single secondary wire always can be used.

Table continues on next page

S_R	The burden of an IED current input channel (VA). S_R=0.020 VA/channel for I_r=1 A and S_r=0.150 VA/channel for I_r=5 A
a	This factor is a function of the primary time constant for the dc component in the fault current. a= 2 for the primary time constant $T_p \leq$ 50 ms a = 3 for the primary time constant $T_p >$ 50 ms
k	A factor of the primary time constant for the dc component in the fault current for a three-phase fault at the set reach of zone 1. k = 4 for the primary time constant $T_p \leq$ 30 ms k = 6 for the primary time constant $T_p >$ 30 ms

2.1.7 Current transformer requirements for CTs according to other standards

All kinds of conventional magnetic core CTs are possible to use with the IEDs if they fulfill the requirements corresponding to the above specified expressed as the rated equivalent secondary e.m.f. E_{al} according to the IEC 60044-6 standard. From different standards and available data for relaying applications it is possible to approximately calculate a secondary e.m.f. of the CT comparable with E_{al}. By comparing this with the required secondary e.m.f. E_{alreq} it is possible to judge if the CT fulfills the requirements. The requirements according to some other standards are specified below.

2.1.7.1 Current transformers according to IEC 60044-1, class P, PR

A CT according to IEC 60044-1 is specified by the secondary limiting e.m.f. E_{2max}. The value of the E_{2max} is approximately equal to the corresponding E_{al} according to IEC 60044-6. Therefore, the CTs according to class P and PR must have a secondary limiting e.m.f. E_{2max} that fulfills the following:

$$E_{2\max} > \max E_{alreq}$$

(Equation 7)

2.1.7.2 Current transformers according to IEC 60044-1, class PX, IEC 60044-6, class TPS (and old British Standard, class X)

CTs according to these classes are specified approximately in the same way by a rated knee-point e.m.f. E_{knee} (E_k for class PX, E_{kneeBS} for class X and the limiting secondary

voltage V_{al} for TPS). The value of the E_{knee} is lower than the corresponding E_{al} according to IEC 60044-6. It is not possible to give a general relation between the E_{knee} and the E_{al} but normally the E_{knee} is approximately 80 % of the E_{al}. Therefore, the CTs according to class PX, X and TPS must have a rated knee-point e.m.f. E_{knee} that fulfills the following:

$$S = TD \cdot S_{Old} + (1 - TD) \cdot S_{Calculated}$$

(Equation 8)

2.1.7.3 Current transformers according to ANSI/IEEE

Current transformers according to ANSI/IEEE are partly specified in different ways. A rated secondary terminal voltage V_{ANSI} is specified for a CT of class C. V_{ANSI} is the secondary terminal voltage the CT will deliver to a standard burden at 20 times rated secondary current without exceeding 10 % ratio correction. There are a number of standardized U_{ANSI} values for example, V_{ANSI} is 400 V for a C400 CT. A corresponding rated equivalent limiting secondary e.m.f. E_{alANSI} can be estimated as follows:

$$E_{alANSI} = \left|20 \cdot I_{SN} \cdot R_{CT} + V_{ANSI}\right| = \left|20 \cdot I_{SN} \cdot R_{CT} + 20 \cdot I_{SN} \cdot Z_{bANSI}\right|$$

(Equation 9)

where:

Z_{bANSI} The impedance (that is, complex quantity) of the standard ANSI burden for the specific C class (Ω)

V_{ANSI} The secondary terminal voltage for the specific C class (V)

The CTs according to class C must have a calculated rated equivalent limiting secondary e.m.f. E_{alANSI} that fulfills the following:

$$E_{alANSI} > \text{maximum of } E_{alreq}$$

(Equation 10)

A CT according to ANSI/IEEE is also specified by the knee-point voltage $V_{kneeANSI}$ that is graphically defined from an excitation curve. The knee-point voltage $V_{kneeANSI}$ normally has a lower value than the knee-point e.m.f. according to IEC and BS. $V_{kneeANSI}$ can approximately be estimated to 75 % of the corresponding E_{al} according to IEC 60044 6. Therefore, the CTs according to ANSI/IEEE must have a knee-point voltage $V_{kneeANSI}$ that fulfills the following:

$$E_{kneeANSI} > 0.75 \cdot (\text{maximum of } E_{alreq})$$

(Equation 11)

2.2 Voltage transformer requirements

The performance of a protection function will depend on the quality of the measured input signal. Transients caused by capacitive Coupled voltage transformers (CCVTs) can affect some protection functions.

Magnetic or capacitive voltage transformers can be used.

The capacitive voltage transformers (CCVTs) should fulfill the requirements according to the IEC 60044–5 standard regarding ferro-resonance and transients. The ferro-resonance requirements of the CCVTs are specified in chapter 7.4 of the standard.

The transient responses for three different standard transient response classes, T1, T2 and T3 are specified in chapter 15.5 of the standard. CCVTs according to all classes can be used.

The protection IED has effective filters for these transients, which gives secure and correct operation with CCVTs.

2.3 SNTP server requirements

The SNTP server to be used is connected to the local network, that is not more than 4-5 switches or routers away from the IED. The SNTP server is dedicated for its task, or at least equipped with a real-time operating system, that is not a PC with SNTP server software. The SNTP server should be stable, that is, either synchronized from a stable source like GPS, or local without synchronization. Using a local SNTP server without synchronization as primary or secondary server in a redundant configuration is not recommended.

2.4 IEC 61850-9-2LE Merging unit requirements

The merging units that supply the IED with measured values via the process bus must fulfill the IEC61850-9-2LE standard.

This part of the IEC61850 is specifying “Communication Service Mapping (SCSM) – Sampled values over ISO/IEC 8802”, in other words – sampled data over Ethernet. The

9-2 part of the IEC61850 protocol uses also definitions from 7-2, “Basic communication structure for substation and feeder equipment – Abstract communication service interface (ACSI)”. The set of functionality implemented in the IED (IEC61850-9-2LE) is a subset of the IEC61850-9-2. For example the IED covers the client part of the standard, not the server part.

The standard does not define the sample rate for data, but in the UCA users group recommendations there are indicated sample rates that are adopted, by consensus, in the industry.

There are two sample rates defined: 80 samples/cycle (4000 samples/sec. at 50Hz or 4800 samples/sec. at 60 Hz) for a merging unit “type1” and 256 samples/cycle for a merging unit “type2”. The IED can receive data rates of 80 samples/cycle.

Note that the IEC 61850-9-2 LE standard does not specify the quality of the sampled values, only the transportation. Thus, the accuracy of the current and voltage inputs to the merging unit and the inaccuracy added by the merging unit must be coordinated with the requirement for actual type of protection function.

Factors influencing the accuracy of the sampled values from the merging unit are for example anti aliasing filters, frequency range, step response, truncating, A/D conversion inaccuracy, time tagging accuracy etc.

In principle shall the accuracy of the current and voltage transformers, together with the merging unit, have the same quality as direct input of currents and voltages.

Section 3 IED application

About this chapter

This chapter describes the use of the included software functions in the IED. The chapter discusses application possibilities and gives guidelines for calculating settings for a particular application.

3.1 General IED application

RED670 is used for the protection, control and monitoring of overhead lines and cables in all types of networks. The IED can be used from distribution up to the highest voltage levels. It is suitable for the protection of heavily loaded lines and multi-terminal lines where the requirement for tripping is one-, two-, and/or three-pole. The IED is also suitable for protection of cable feeders to generator block transformers.

The phase segregated current differential protection provides an excellent sensitivity for high resistive faults and gives a secure phase selection. The availability of six stabilized current inputs per phase allows use on multi-breaker arrangements in three terminal applications or up to five terminal applications with single breaker arrangements. The communication between the IEDs involved in the differential scheme is based on the IEEE C37.94 standard and can be duplicated for important installations when required for redundancy reasons. Charging current compensation allows high sensitivity also on long overhead lines and cables. A full scheme distance protection is included to provide independent protection in parallel with the differential scheme in case of a communication channel failure for the differential scheme. The distance protection then provide protection for the entire line including the remote end back up capability either in case of a communications failure or via use of an independent communication channel to provide a fully redundant scheme of protection (that is a second main protection scheme). Eight channels for intertrip and other binary signals are available in the communication between the IEDs.

A high impedance differential protection can be used to protect T-feeders or line reactors.

The auto-reclose for single-, two- and/or three pole reclosing includes priority circuits for multi-breaker arrangements. It co-operates with the synchronism check function with high-speed or delayed reclosing.

High set instantaneous phase and ground overcurrent, four step directional or non-directional delayed phase and ground overcurrent, thermal overload and two step

under- and overvoltage functions are examples of the available functions allowing the user to fulfill any application requirement.

Disturbance recording and fault locator are available to allow independent post-fault analysis after primary disturbances. The Disturbance recorder will also show remote station currents, as received to this IED, time compensated with measure communication time.

Out of Step function is available to separate power system sections close to electrical centre at occurring out of step.

RED670 can be used in applications with the IEC 61850-9-2LE process bus with up to three Merging Units (MU). Each MU has eight analog channels, normally four current and four voltages. Conventional and Merging Unit channels can be mixed freely in your application.

If IEC 61850-9-2LE communication is interrupt, data from the merging units (MU) after the time for interruption will be incorrect. Both data stored in the IED and displayed on the local HMI will be corrupt. For this reason it is important to connect signal from respective MU units (SMPLLOST) to the disturbance recorder.

The advanced logic capability, where the user logic is prepared with a graphical tool, allows special applications such as automatic opening of disconnectors in multi-breaker arrangements, closing of breaker rings, load transfer logics etc. The graphical configuration tool ensures simple and fast testing and commissioning.

A loop testing function allows complete testing including remote end IED when local IED is set in test mode.

Serial data communication is via optical connections to ensure immunity against disturbances.

The wide application flexibility makes this product an excellent choice for both new installations and the refurbishment of existing installations.

3.2 Analog inputs

3.2.1 Introduction

Analog input channels must be configured and set properly to get correct measurement results and correct protection operations. For power measuring and all directional and differential functions the directions of the input currents must be defined properly.

Measuring and protection algorithms in the IED use primary system quantities. Setting values are in primary quantities as well and it is important to set the data about the connected current and voltage transformers properly.

A reference *PhaseAngleRef* can be defined to facilitate service values reading. This analog channels phase angle will always be fixed to zero degrees and all other angle information will be shown in relation to this analog input. During testing and commissioning of the IED the reference channel can be changed to facilitate testing and service values reading.

The availability of VT inputs depends on the ordered transformer input module (TRM) type.

3.2.2 Setting guidelines

The available setting parameters related to analog inputs are depending on the actual hardware (TRM) and the logic configuration made in PCM600.

3.2.2.1 Setting of the phase reference channel

All phase angles are calculated in relation to a defined reference. An appropriate analog input channel is selected and used as phase reference. The parameter *PhaseAngleRef* defines the analog channel that is used as phase angle reference.

Example

The setting *PhaseAngleRef=7* shall be used if a phase-to-ground voltage (usually the A phase-to-ground voltage connected to VT channel number 7 of the analog card) is selected to be the phase reference.

Setting of current channels

The direction of a current to the IED is depending on the connection of the CT. Unless indicated otherwise, the main CTs are supposed to be Wye (star) connected and can be connected with the grounding point to the object or from the object. This information must be set in the IED. The convention of the directionality is defined as follows: A positive value of current, power, and so on means that the quantity has the direction into the object and a negative value means direction out from the object. For directional functions the direction into the object is defined as Forward and the direction out from the object is defined as Reverse. See figure 1

A positive value of current, power, and so on (forward) means that the quantity has a direction towards the object. - A negative value of current, power, and so on (reverse) means a direction away from the object. See figure 1.

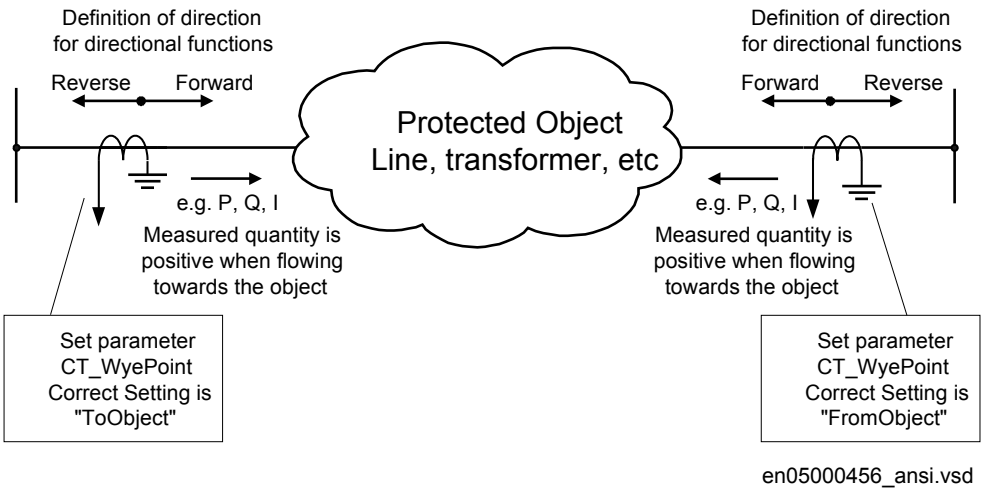

Figure 1: Internal convention of the directionality in the IED

With correct setting of the primary CT direction, *CT_WyePoint* set to *FromObject* or *ToObject*, a positive quantities always flowing towards the object and a direction defined as Forward always is looking towards the object. The following examples show the principle.

Example 1

Two IEDs used for protection of two objects.

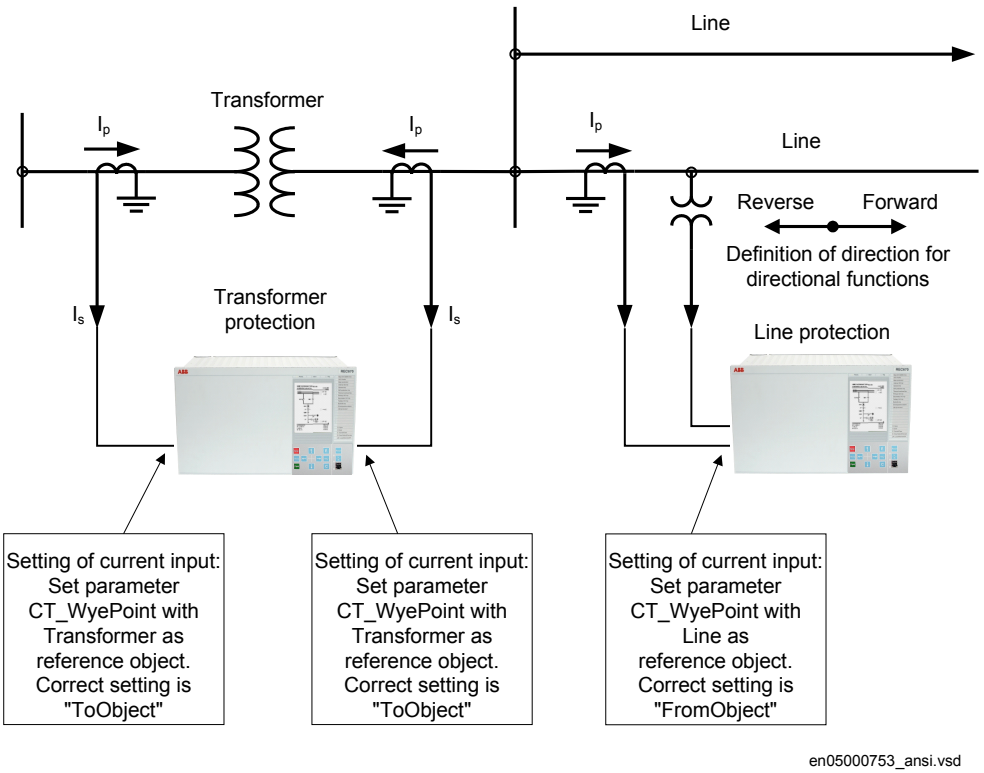

Figure 2: Example how to set CT_WyePoint parameters in the IED

The figure 2 shows the normal case where the objects have their own CTs. The settings for CT direction shall be done according to the figure. To protect the line the direction of the directional functions of the line protection shall be set to *Forward*. This means that the protection is looking towards the line.

Example 2

Two IEDs used for protection of two objects and sharing a CT.

Figure 3: Example how to set CT_WyePoint parameters in the IED

This example is similar to example 1, but here the transformer is feeding just one line and the line protection uses the same CT as the transformer protection does. The CT direction is set with different reference objects for the two IEDs though it is the same current from the same CT that is feeding the two IEDs. With these settings the directional functions of the line protection shall be set to *Forward* to look towards the line.

Example 3

One IED used to protect two objects.

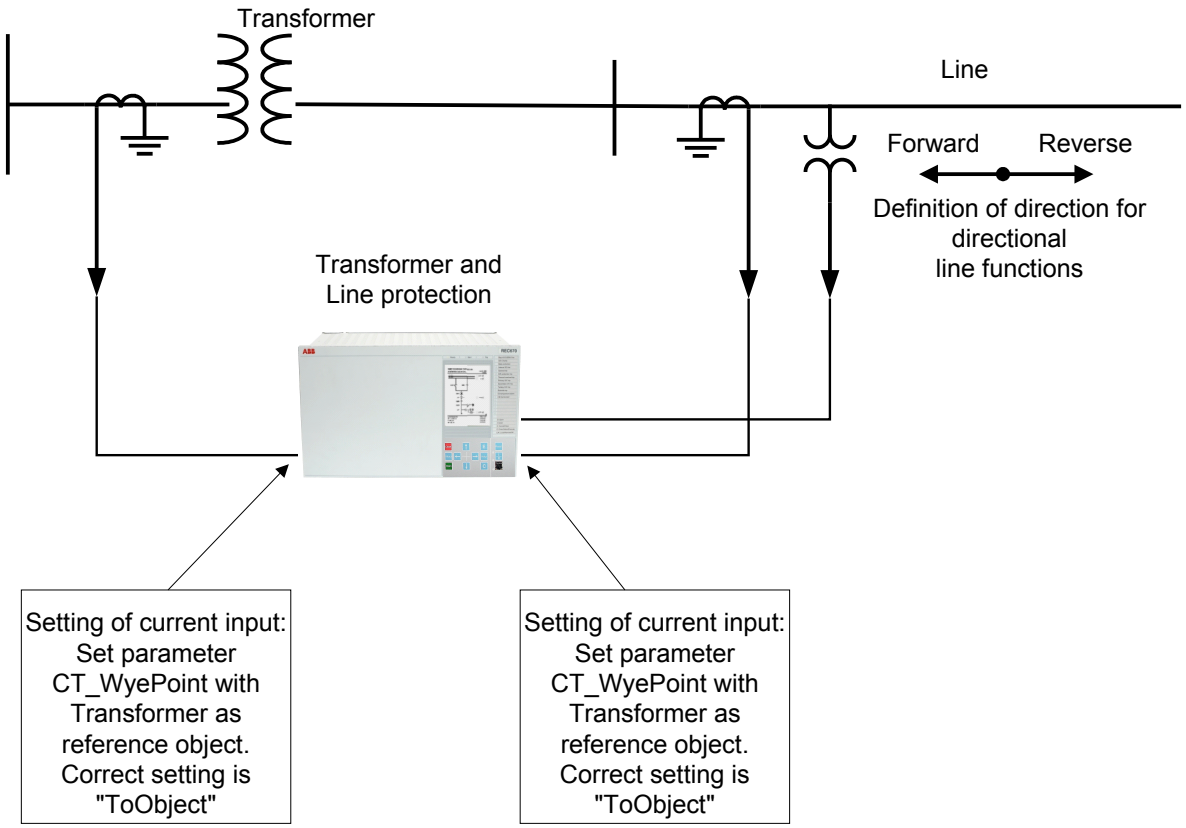

Figure 4: Example how to set CT_WyePoint parameters in the IED

In this example one IED includes both transformer and line protection and the line protection uses the same CT as the transformer protection does. For both current input channels the CT direction is set with the transformer as reference object. This means that the direction Forward for the line protection is towards the transformer. To look towards the line the direction of the directional functions of the line protection must be set to *Reverse*. The direction *Forward*/*Reverse* is related to the reference object that is the transformer in this case.

When a function is set to *Reverse* and shall protect an object in reverse direction it shall be noted that some directional functions are not symmetrical regarding the reach in forward and reverse direction. It is in first hand the reach of the directional criteria that can differ. Normally it is not any limitation but it is advisable to have it in mind and check if it is acceptable for the application in question.

If the IED has a sufficient number of analog current inputs an alternative solution is shown in figure 5. The same currents are fed to two separate groups of inputs and the

line and transformer protection functions are configured to the different inputs. The CT direction for the current channels to the line protection is set with the line as reference object and the directional functions of the line protection shall be set to *Forward* to protect the line.

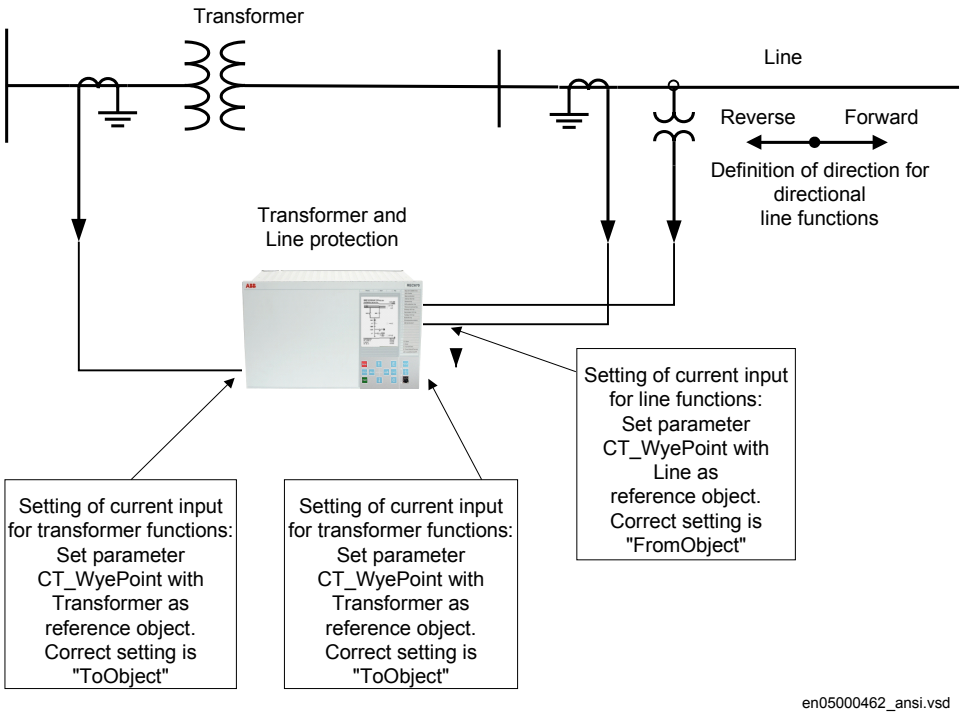

Figure 5: Example how to set CT_WyePoint parameters in the IED

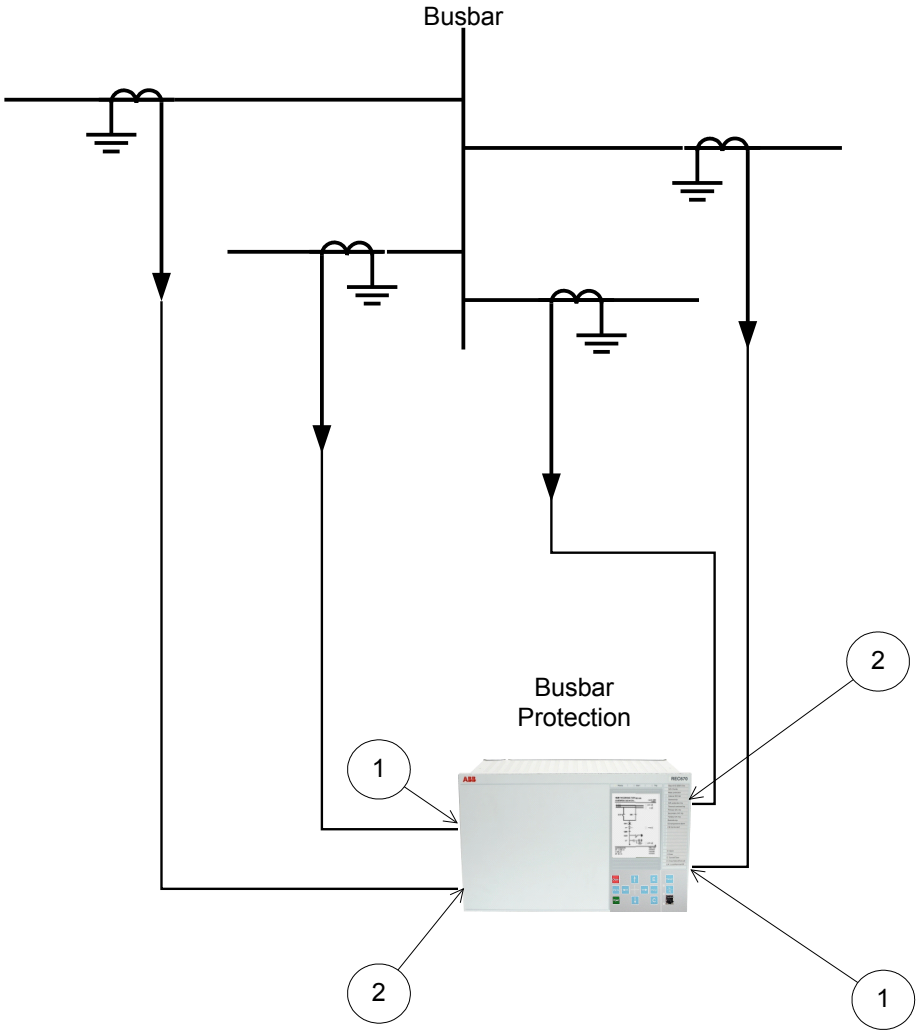

en06000196_ansi.vsd

Figure 6: Example how to set CT_WyePoint parameters in the IED

For busbar protection it is possible to set the *CT_WyePoint* parameters in two ways.

The first solution will be to use busbar as a reference object. In that case for all CT inputs marked with 1 in figure 6, set *CT_WyePoint = ToObject*, and for all CT inputs marked with 2 in figure 6, set *CT_WyePoint = FromObject*.

The second solution will be to use all connected bays as reference objects. In that case for all CT inputs marked with 1 in figure 6, set *CT_WyePoint = FromObject*, and for all CT inputs marked with 2 in figure 6, set *CT_WyePoint = ToObject*.

Regardless which one of the above two options is selected busbar differential protection will behave correctly.

The main CT ratios must also be set. This is done by setting the two parameters *CTsec* and *CTprim* for each current channel. For a 1000/5 A CT the following setting shall be used:

- *CTprim = 1000* (value in A)
- *CTsec =5* (value in A).

Examples on how to connect, configure and set CT inputs for most commonly used CT connections

Figure 7 defines the marking of current transformer terminals commonly used around the world:

In the SMAI function block, you have to set if the SMAI block is measuring current or voltage. This is done with the parameter: *AnalogInputType*: Current/voltage. The *ConnectionType*: phase -phase/ phase-earth and *GlobalBaseSel*.

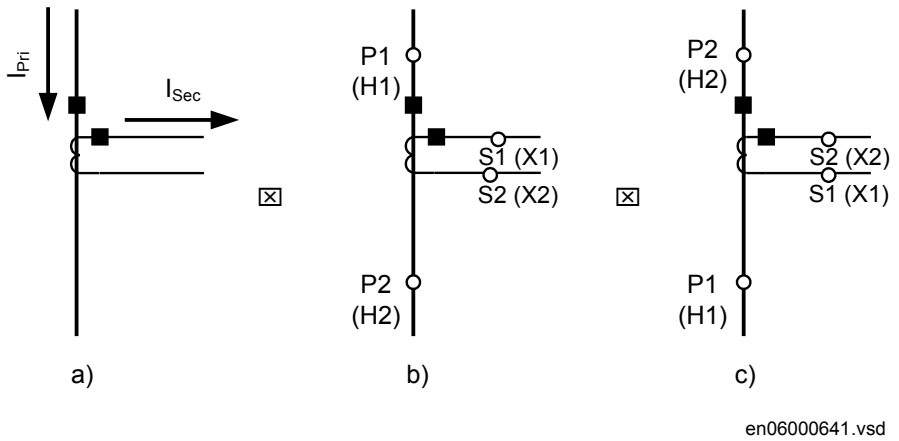

Figure 7: Commonly used markings of CT terminals

Where:

a) is symbol and terminal marking used in this document. Terminals marked with a dot indicates the primary and secondary winding terminals with the same (that is, positive) polarity

b) and c) are equivalent symbols and terminal marking used by IEC (ANSI) standard for CTs. Note that for these two cases the CT polarity marking is correct!

It shall be noted that depending on national standard and utility practices, the rated secondary current of a CT has typically one of the following values:

- 1A
- 5A

However in some cases the following rated secondary currents are used as well:

- 2A
- 10A

The IED fully supports all of these rated secondary values.

It is recommended to:

- use 1A rated CT input into the IED in order to connect CTs with 1A and 2A secondary rating
- use 5A rated CT input into the IED in order to connect CTs with 5A and 10A secondary rating

Example on how to connect a wye connected three-phase CT set to the IED

Figure 8 gives an example about the wiring of a wye connected three-phase CT set to the IED. It gives also an overview of the actions which are needed to make this measurement available to the built-in protection and control functions within the IED as well.

For correct terminal designations, see the connection diagrams valid for the delivered IED.

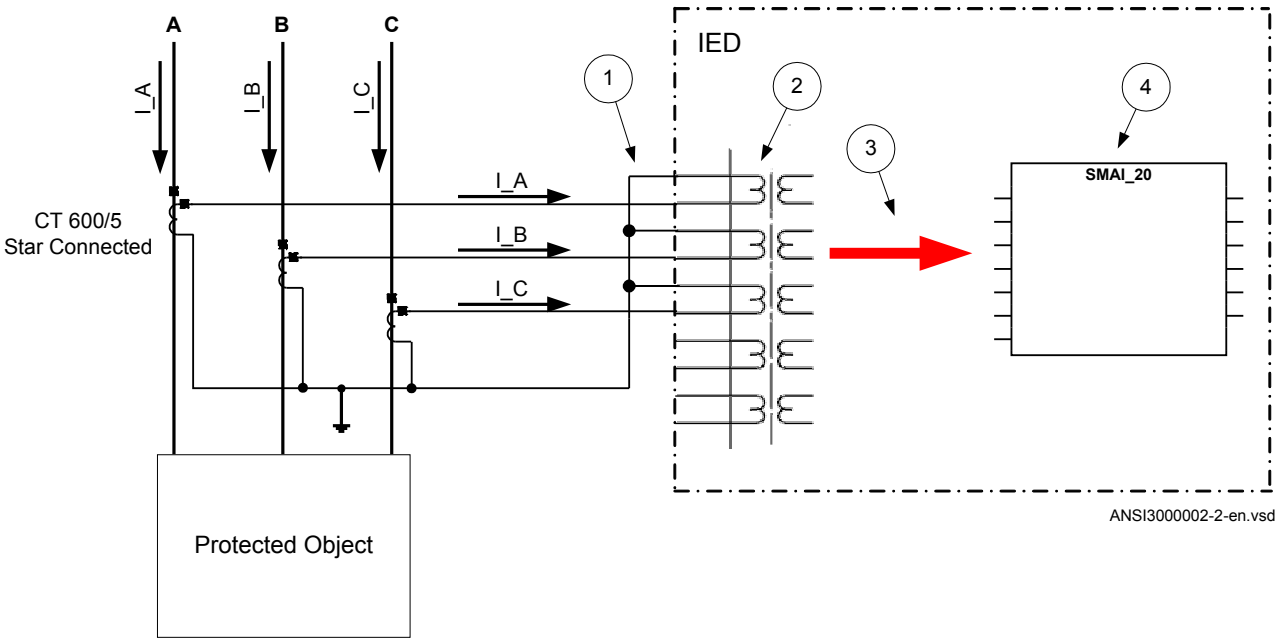

Figure 8: Wye connected three-phase CT set with wye point towards the protected object

Where:

1) The drawing shows how to connect three individual phase currents from a wye connected three-phase CT set to the three CT inputs of the IED.

2) The current inputs are located in the TRM. It shall be noted that for all these current inputs the following setting values shall be entered for the example shown in Figure8.
'

- CTprim=600A
- CTsec=5A
- CTStarPoint=ToObject

Inside the IED only the ratio of the first two parameters is used. The third parameter (CTStarPoint=ToObject) as set in this example causes no change on the measured currents. In other words, currents are already measured towards the protected object.

Table continues on next page

3) These three connections are the links between the three current inputs and the three input channels of the preprocessing function block 4). Depending on the type of functions, which need this current information, more than one preprocessing block might be connected in parallel to the same three physical CT inputs.

4) The preprocessing block that has the task to digitally filter the connected analog inputs and calculate:

- fundamental frequency phasors for all three input channels
- harmonic content for all three input channels
- positive, negative and zero sequence quantities by using the fundamental frequency phasors for the first three input channels (channel one taken as reference for sequence quantities)

These calculated values are then available for all built-in protection and control functions within the IED, which are connected to this preprocessing function block. For this application most of the preprocessing settings can be left to the default values.
If frequency tracking and compensation is required (this feature is typically required only for IEDs installed in power plants), then the setting parameters DFTReference shall be set accordingly.
Section SMAI in this manual provides information on adaptive frequency tracking for the signal matrix for analogue inputs (SMAI).

5) AI3P in the SMAI function block is a grouped signal which contains all the data about the phases L1, L2, L3 and neutral quantity; in particular the data about fundamental frequency phasors, harmonic content and positive sequence, negative and zero sequence quantities are available.
AI1, AI2, AI3, AI4 are the output signals from the SMAI function block which contain the fundamental frequency phasors and the harmonic content of the corresponding input channels of the preprocessing function block.
AIN is the signal which contains the fundamental frequency phasors and the harmonic content of the neutral quantity; this data is calculated by the preprocessing function block on the basis of the inputs GRPL1, GRPL2 and GRPL3.

Another alternative is to have the star point of the three-phase CT set as shown in the figure below:

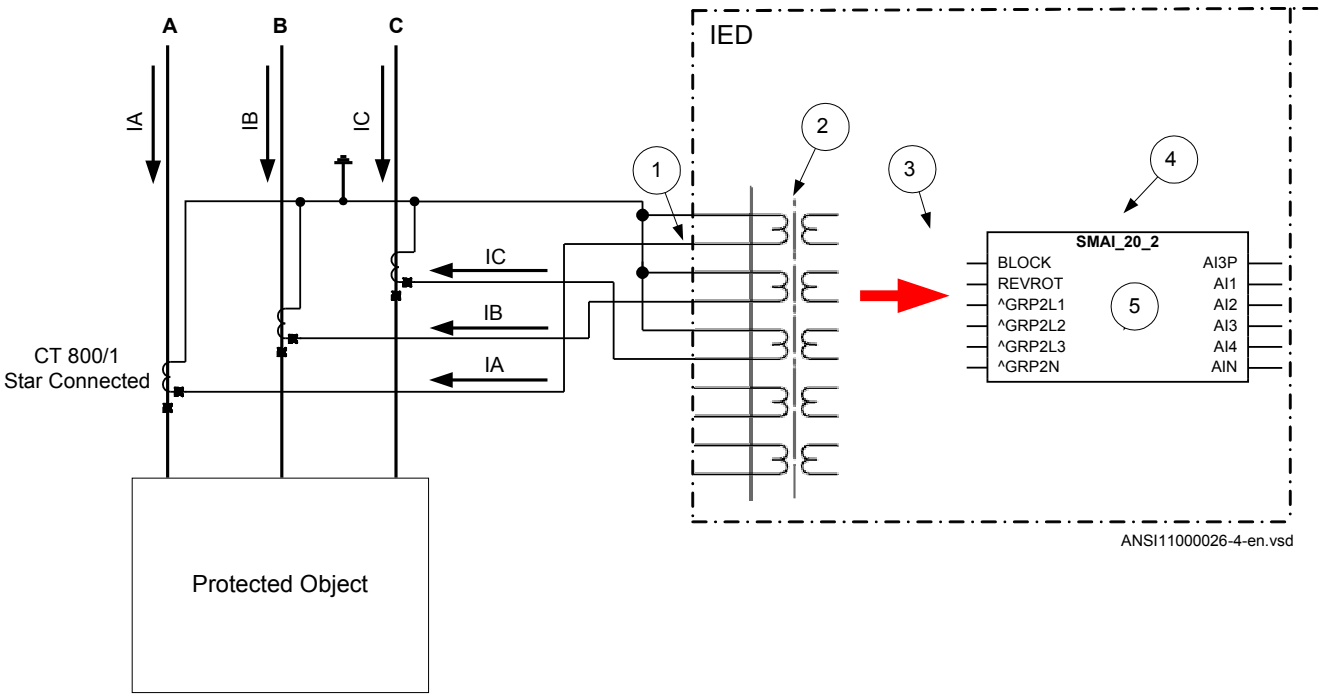

Figure 9: Wye connected three-phase CT set with its star point away from the protected object

In the example in figure 9 case everything is done in a similar way as in the above described example (figure 8). The only difference is the setting of the parameter *CTStarPoint* of the used current inputs on the TRM (item 2 in the figure):

- *CTprim*=600A
- *CTsec*=5A
- *CTWyePoint*=FromObject

Inside the IED only the ratio of the first two parameters is used. The third parameter as set in this example will negate the measured currents in order to ensure that the currents are measured towards the protected object within the IED.

A third alternative is to have the residual/neutral current from the three-phase CT set connected to the IED as shown in the figure below.

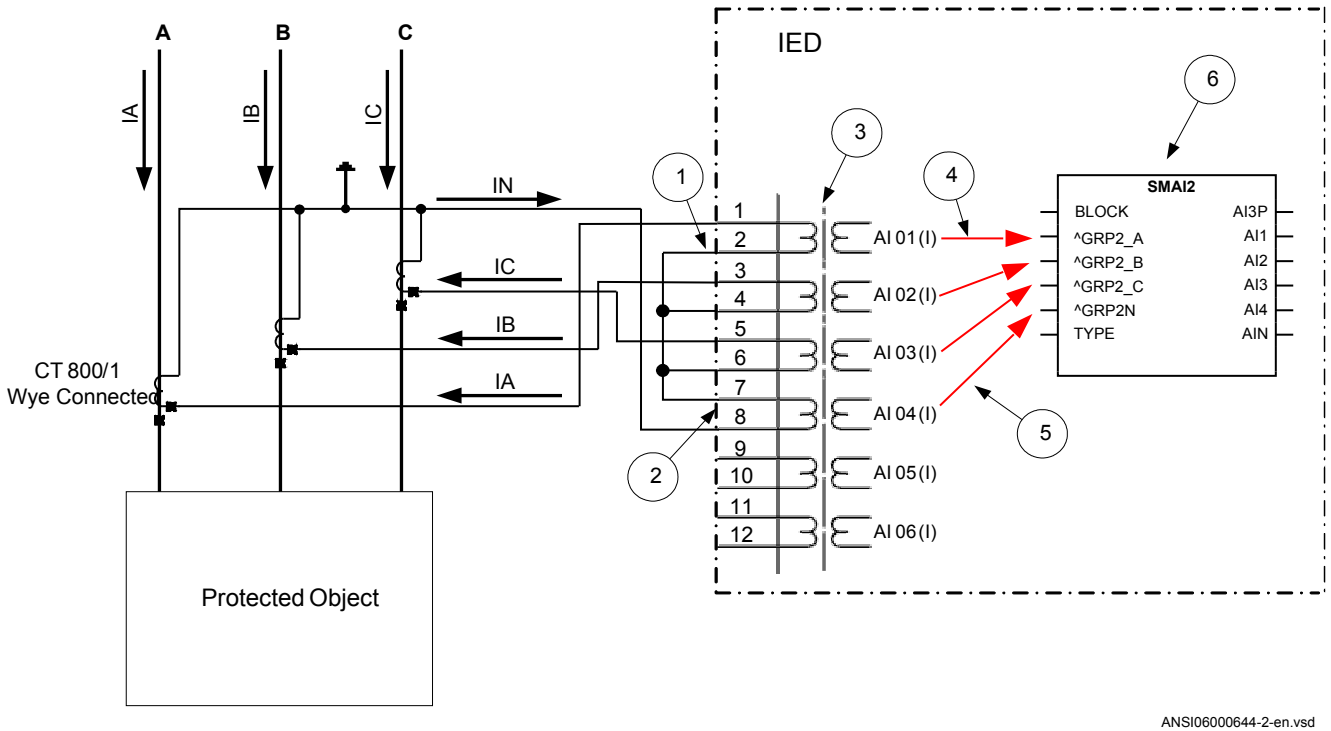

Figure 10: Wye connected three-phase CT set with its star point away from the protected object and the residual/ neutral current connected to the IED

Where:

1) The drawing shows how to connect three individual phase currents from a wye connected three-phase CT set to the three CT inputs of the IED.

2) shows how to connect residual/neutral current from the three-phase CT set to the fourth inputs in the IED. It shall be noted that if this connection is not made, the IED will still calculate this current internally by vectorial summation of the three individual phase currents.

3) is the TRM where these current inputs are located. It shall be noted that for all these current inputs the following setting values shall be entered.

- CTprim=800A
- CTsec=1A
- CTStarPoint=FromObject
- ConnectionType=Ph-N

Inside the IED only the ratio of the first two parameters is used. The third parameter as set in this example will have no influence on the measured currents (that is, currents are already measured towards the protected object).

4) are three connections made in the Signal Matrix tool (SMT), Application configuration tool (ACT), which connects these three current inputs to the first three input channels on the preprocessing function block 6). Depending on the type of functions, which need this current information, more than one preprocessing block might be connected in parallel to these three CT inputs.

Table continues on next page

5) is a connection made in the Signal Matrix tool (SMT), Application configuration tool (ACT), which connects the residual/neutral current input to the fourth input channel of the preprocessing function block 6). Note that this connection in SMT shall not be done if the residual/neutral current is not connected to the IED. In that case the pre-processing block will calculate it by vectorial summation of the three individual phase currents.

6) is a Preprocessing block that has the task to digitally filter the connected analog inputs and calculate:

- fundamental frequency phasors for all four input channels
- harmonic content for all four input channels
- positive, negative and zero sequence quantities by using the fundamental frequency phasors for the first three input channels (channel one taken as reference for sequence quantities)

These calculated values are then available for all built-in protection and control functions within the IED, which are connected to this preprocessing function block in the configuration tool. For this application most of the preprocessing settings can be left to the default values.
If frequency tracking and compensation is required (this feature is typically required only for IEDs installed in the generating stations), then the setting parameters DFTReference shall be set accordingly.

Example how to connect delta connected three-phase CT set to the IED

Figure 11 gives an example how to connect a delta connected three-phase CT set to the IED. It gives an overview of the required actions by the user in order to make this measurement available to the built-in protection and control functions in the IED as well.

For correct terminal designations, see the connection diagrams valid for the delivered IED.

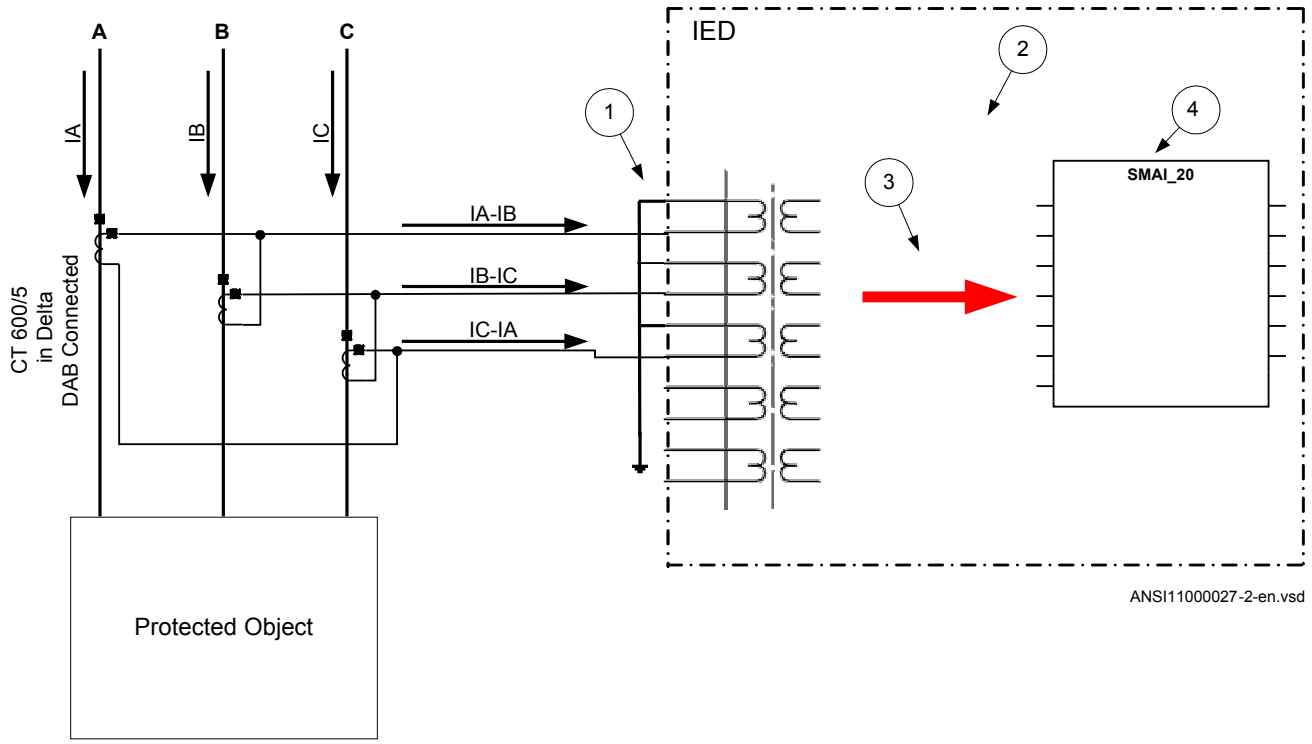

Figure 11: Delta DAB connected three-phase CT set

Where:

1) shows how to connect three individual phase currents from a delta connected three-phase CT set to three CT inputs of the IED.

2) is the TRM where these current inputs are located. It shall be noted that for all these current inputs the following setting values shall be entered.
CT_{prim}=600A
CT_{sec}=5A

- *CTWyePoint=ToObject*
- *ConnectionType=Ph-Ph*

3) are three connections made in Signal Matrix Tool (SMT), Application configuration tool (ACT), which connect these three current inputs to first three input channels of the preprocessing function block 4). Depending on the type of functions which need this current information, more then one preprocessing block might be connected in parallel to these three CT inputs.

4) is a Preprocessing block that has the task to digitally filter the connected analog inputs and calculate:

- fundamental frequency phasors for all three input channels
- harmonic content for all three input channels
- positive, negative and zero sequence quantities by using the fundamental frequency phasors for the first three input channels (channel one taken as reference for sequence quantities)

These calculated values are then available for all built-in protection and control functions within the IED, which are connected to this preprocessing function block. For this application most of the preprocessing settings can be left to the default values.
If frequency tracking and compensation is required (this feature is typically required only for IEDs installed in the generating stations) then the setting parameters *DFTReference* shall be set accordingly.

Another alternative is to have the delta connected CT set as shown in figure 12:

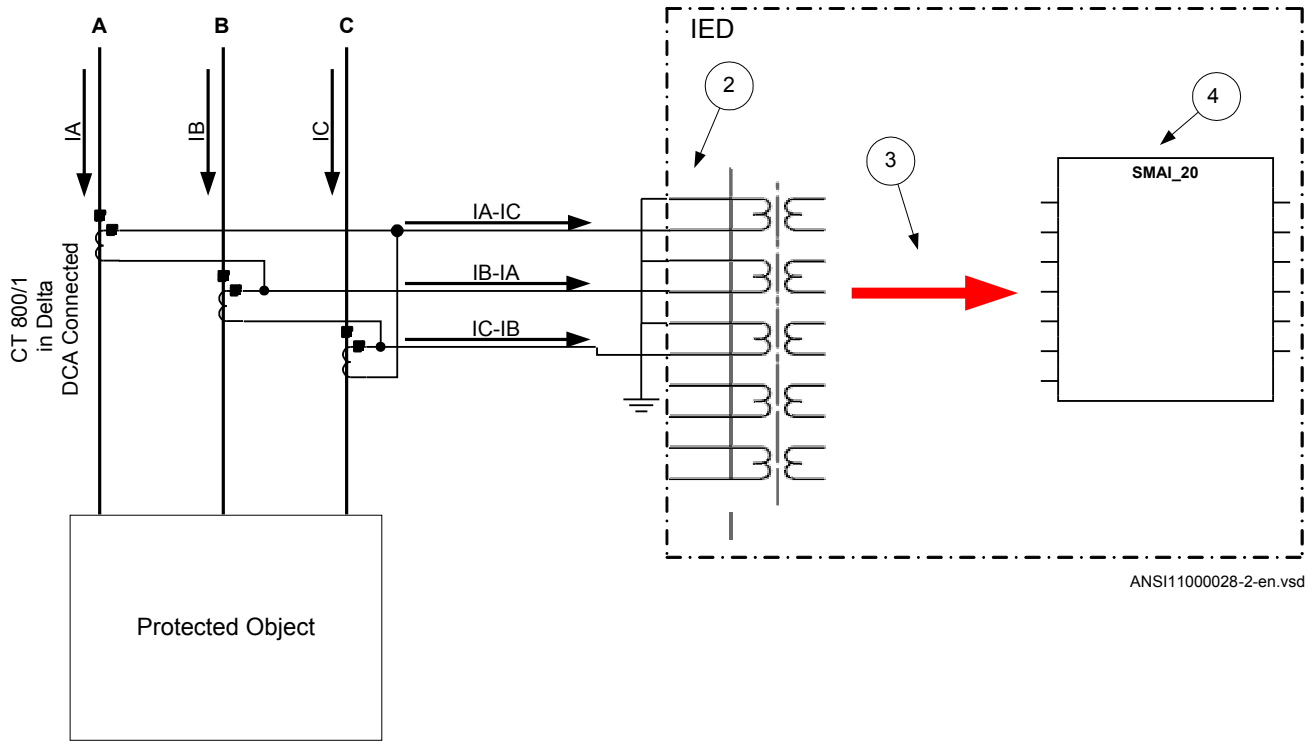

Figure 12: Delta DAC connected three-phase CT set

In this case, everything is done in a similar way as in the above described example, except that for all used current inputs on the TRM the following setting parameters shall be entered:

CT_{prim}=800A

CT_{sec}=1A

- *CTWyePoint*=ToObject
- *ConnectionType=Ph-Ph*

It is important to notice the references in SMAI. As inputs at *Ph-Ph* are expected to be A-B, B-Crespectively C-A we need to tilt 180º by setting *ToObject*.

Example how to connect single-phase CT to the IED

Figure 13 gives an example how to connect the single-phase CT to the IED. It gives an overview of the required actions by the user in order to make this measurement available to the built-in protection and control functions within the IED as well.

For correct terminal designations, see the connection diagrams valid for the delivered IED.

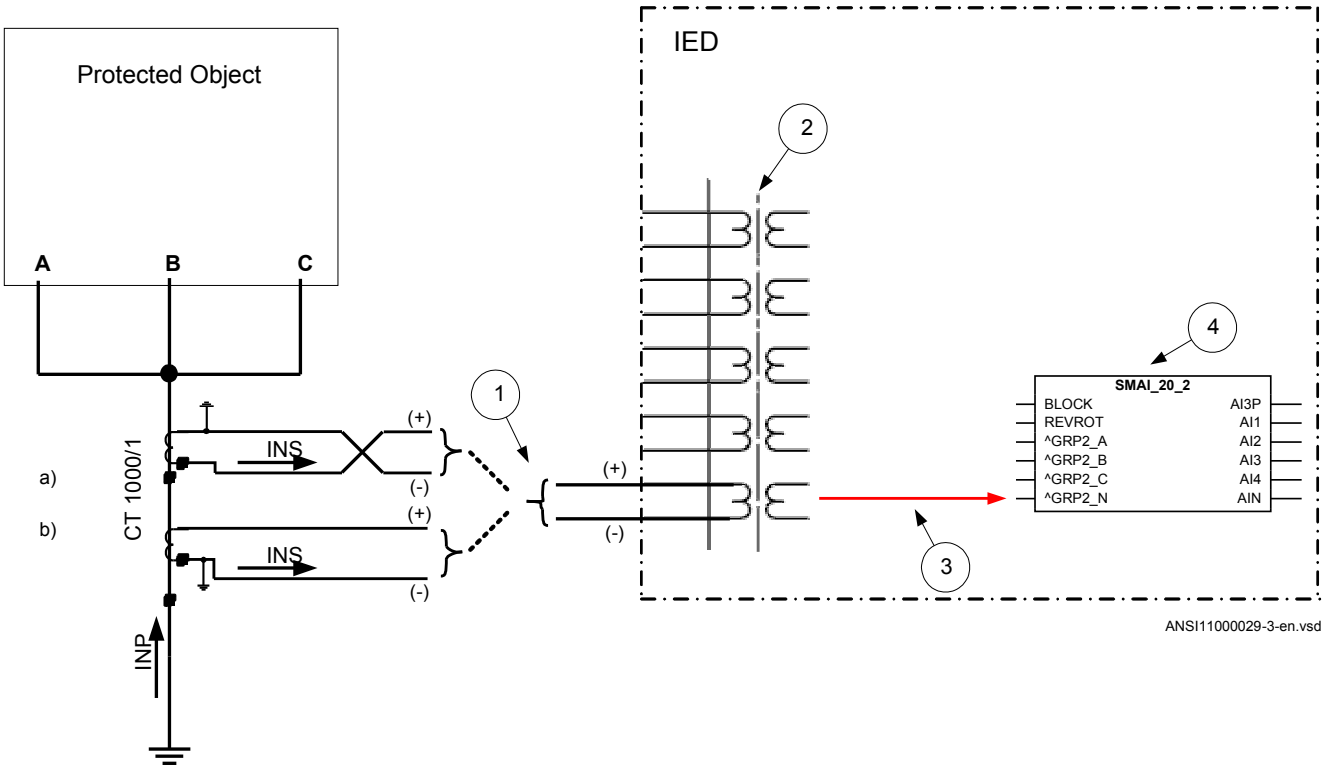

Figure 13: Connections for single-phase CT input

Where:

1) shows how to connect single-phase CT input in the IED.

2) is TRM where these current inputs are located. It shall be noted that for all these current inputs the following setting values shall be entered.
For connection (a) shown in figure 13:
*CT*prim = 1000 A
*CT*sec = 1A
CTWyePoint=ToObject

For connection (b) shown in figure 13:
*CT*prim = 1000 A
*CT*sec = 1A
CTWyePoint=FromObject

3) shows the connection made in SMT tool, which connect this CT input to the fourth input channel of the preprocessing function block 4).

4) is a Preprocessing block that has the task to digitally filter the connected analog inputs and calculate values. The calculated values are then available for all built-in protection and control functions within the IED, which are connected to this preprocessing function block. If frequency tracking and compensation is required (this feature is typically required only for IEDs installed in the power plants) then the setting parameters *DFTReference* shall be set accordingly.

Setting of voltage channels

As the IED uses primary system quantities the main VT ratios must be known to the IED. This is done by setting the two parameters *VTsec* and *VTprim* for each voltage channel. The phase-to-phase value can be used even if each channel is connected to a phase-to-ground voltage from the VT.

Example

Consider a VT with the following data:

$$\frac{132\text{kV}}{\sqrt{3}} \Big/ \frac{120\text{V}}{\sqrt{3}}$$

(Equation 12)

The following setting should be used: *VTprim=132* (value in kV) *VTsec=120* (value in V)

Examples how to connect, configure and set VT inputs for most commonly used VT connections

Figure 14 defines the marking of voltage transformer terminals commonly used around the world.

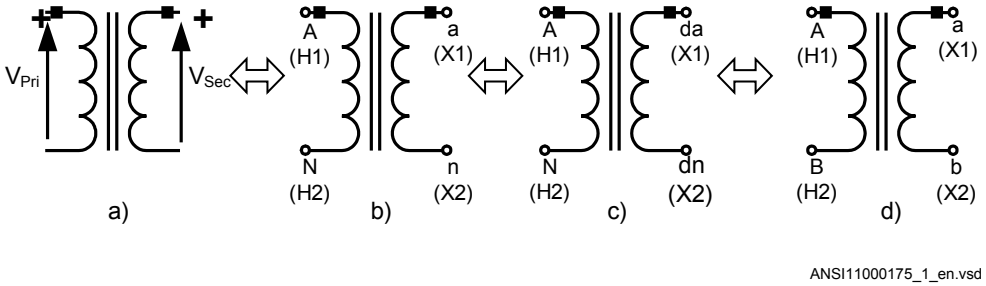

Figure 14: Commonly used markings of VT terminals

Where:

a) is the symbol and terminal marking used in this document. Terminals marked with a dot indicate the primary and secondary winding terminals with the same (positive) polarity

b) is the equivalent symbol and terminal marking used by IEC (ANSI) standard for phase-to-ground connected VTs

c) is the equivalent symbol and terminal marking used by IEC (ANSI) standard for open delta connected VTs

d) is the equivalent symbol and terminal marking used by IEC (ANSI) standard for phase-to-phase connected VTs

It shall be noted that depending on national standard and utility practices the rated secondary voltage of a VT has typically one of the following values:

- 100 V
- 110 V
- 115 V
- 120 V
- 230 V

The IED fully supports all of these values and most of them will be shown in the following examples.

Examples on how to connect a three phase-to-ground connected VT to the IED

Figure 15 gives an example on how to connect the three phase-to-ground connected VT to the IED. It as well gives overview of required actions by the user in order to make this measurement available to the built-in protection and control functions within the IED.

For correct terminal designations, see the connection diagrams valid for the delivered IED.

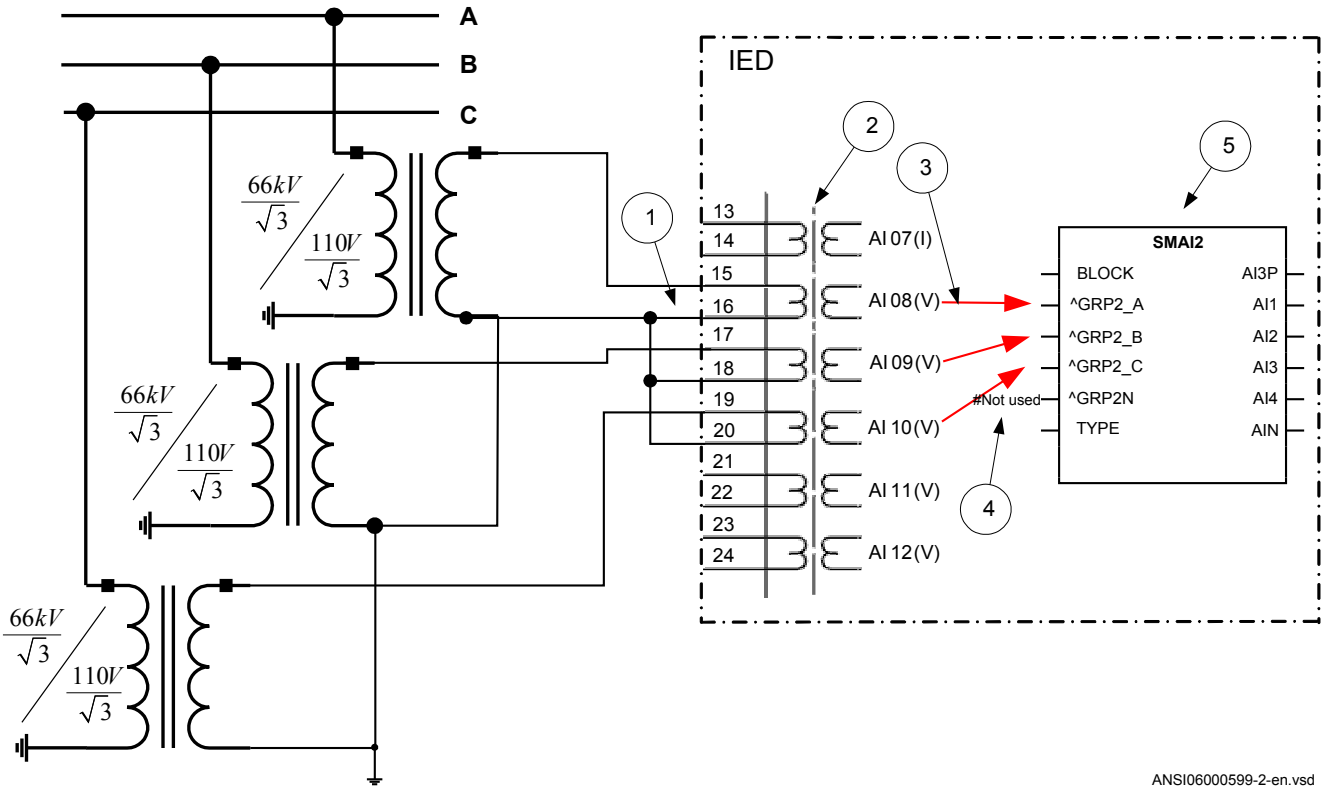

Figure 15: A Three phase-to-ground connected VT

Where:

1) shows how to connect three secondary phase-to-ground voltages to three VT inputs on the IED

2) is the TRM where these three voltage inputs are located. For these three voltage inputs, the following setting values shall be entered:
VTprim = 66 kV
VTsec = 110 V
Inside the IED, only the ratio of these two parameters is used. It shall be noted that the ratio of the entered values exactly corresponds to ratio of one individual VT.

$$\frac{66}{110} = \frac{66/\sqrt{3}}{110/\sqrt{3}}$$

(Equation 13)

Table continues on next page

3) are three connections made in Signal Matrix Tool (SMT), which connect these three voltage inputs to first three input channels of the preprocessing function block 5). Depending on the type of functions which need this voltage information, more then one preprocessing block might be connected in parallel to these three VT inputs.

4) shows that in this example the fourth (that is, residual) input channel of the preprocessing block is not connected in SMT tool. Thus the preprocessing block will automatically calculate 3Vo inside by vectorial sum from the three phase to ground voltages connected to the first three input channels of the same preprocessing block. Alternatively, the fourth input channel can be connected to open delta VT input, as shown in figure 17.

5) is a Preprocessing block that has the task to digitally filter the connected analog inputs and calculate:

- fundamental frequency phasors for all four input channels
- harmonic content for all four input channels
- positive, negative and zero sequence quantities by using the fundamental frequency phasors for the first three input channels (channel one taken as reference for sequence quantities)

These calculated values are then available for all built-in protection and control functions within the IED, which are connected to this preprocessing function block in the configuration tool. For this application most of the preprocessing settings can be left to the default values. However the following settings shall be set as shown here:
VBase=66 kV (that is, rated Ph-Ph voltage)
If frequency tracking and compensation is required (this feature is typically required only for IEDs installed in the generating stations) then the setting parameters *DFTReference* shall be set accordingly.

Example on how to connect a phase-to-phase connected VT to the IED

Figure 16 gives an example how to connect a phase-to-phase connected VT to the IED. It gives an overview of the required actions by the user in order to make this measurement available to the built-in protection and control functions within the IED as well. It shall be noted that this VT connection is only used on lower voltage levels (that is, rated primary voltage below 40 kV).

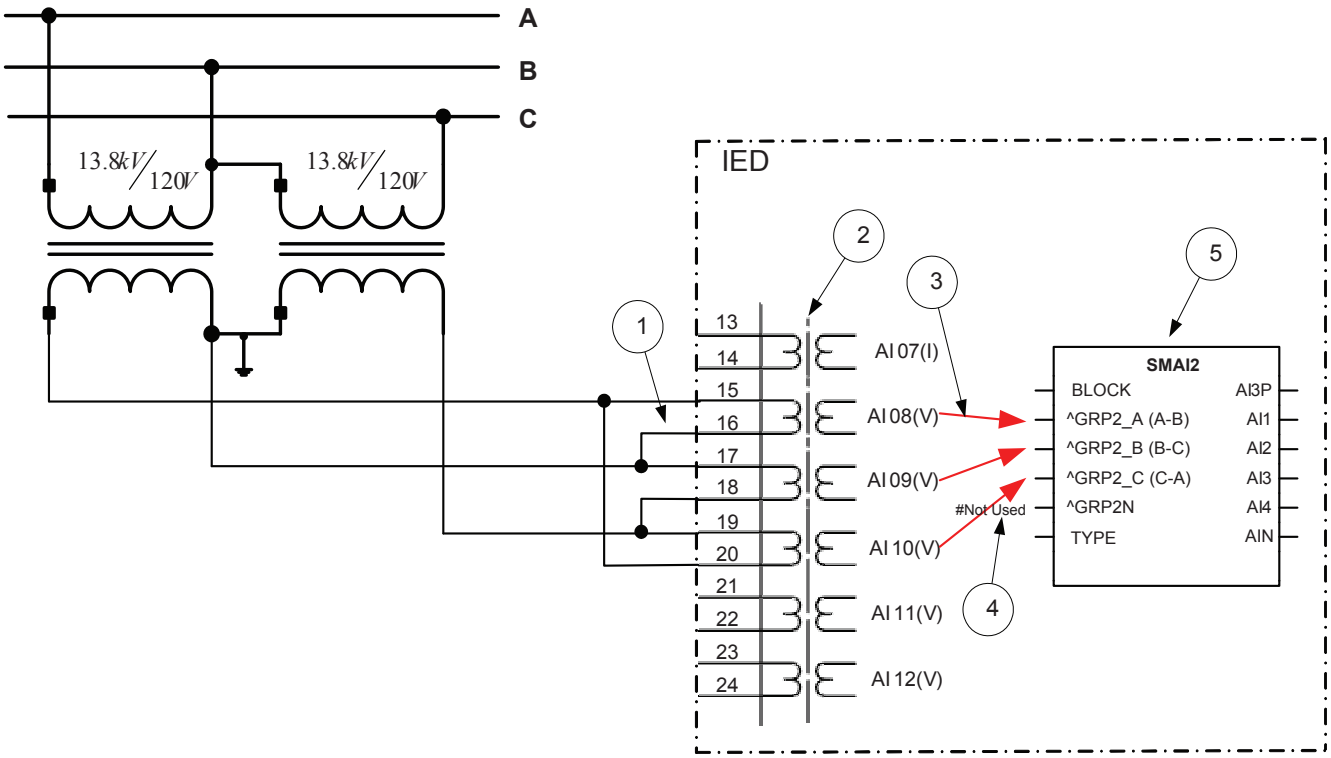

Figure 16: A Two phase-to-phase connected VT

Where:

1) shows how to connect the secondary side of a phase-to-phase VT to the VT inputs on the IED

2) is the TRM where these three voltage inputs are located. It shall be noted that for these three voltage inputs the following setting values shall be entered:
VTprim=13.8 kV
VTsec=120 V
Please note that inside the IED only ratio of these two parameters is used.

Table continues on next page

3) are three connections made in the Signal Matrix tool (SMT), Application configuration tool (ACT), which connects these three voltage inputs to first three input channels of the preprocessing function block 5). Depending on the type of functions, which need this voltage information, more than one preprocessing block might be connected in parallel to these three VT inputs

4) shows that in this example the fourth (that is, residual) input channel of the preprocessing block is not connected in SMT. Note. If the paameters V_A, V_B, V_C, V_N should be used the open delta must be connected here.

5) Preprocessing block has a task to digitally filter the connected analog inputs and calculate:

- fundamental frequency phasors for all four input channels
- harmonic content for all four input channels
- positive, negative and zero sequence quantities by using the fundamental frequency phasors for the first three input channels (channel one taken as reference for sequence quantities)

These calculated values are then available for all built-in protection and control functions within the IED, which are connected to this preprocessing function block in the configuration tool. For this application most of the preprocessing settings can be left to the default values. However the following settings shall be set as shown here:
ConnectionType=Ph-Ph
VBase=13.8 kV
If frequency tracking and compensation is required (this feature is typically required only for IEDs installed in the generating stations) then the setting parameters *DFTReference* shall be set accordingly.

Example on how to connect an open delta VT to the IED for high impedance grounded or ungrounded netwoeks

Figure 17 gives an example about the wiring of an open delta VT to the IED for high impedance grounded or ungrounded power systems. It shall be noted that this type of VT connection presents a secondary voltage proportional to 3V0 to the IED.

In case of a solid ground fault close to the VT location the primary value of 3Vo will be equal to:

$$3Vo = \sqrt{3} \cdot V_{Ph-Ph} = 3 \cdot V_{Ph-Gnd}$$

(Equation 14)

The primary rated voltage of an open Delta VT is always equal to $V_{Ph\text{-}Gnd}$. Three series connected VT secondary windings gives a secondary voltage equal to three times the individual VT secondary winding rating. Thus the secondary windings of open delta VTs quite often have a secondary rated voltage equal to one third of the rated phase-to-phase VT secondary voltage (110/3V in this particular example).

Figure 17 gives overview of required actions by the user in order to make this measurement available to the built-in protection and control functions within the IED as well.

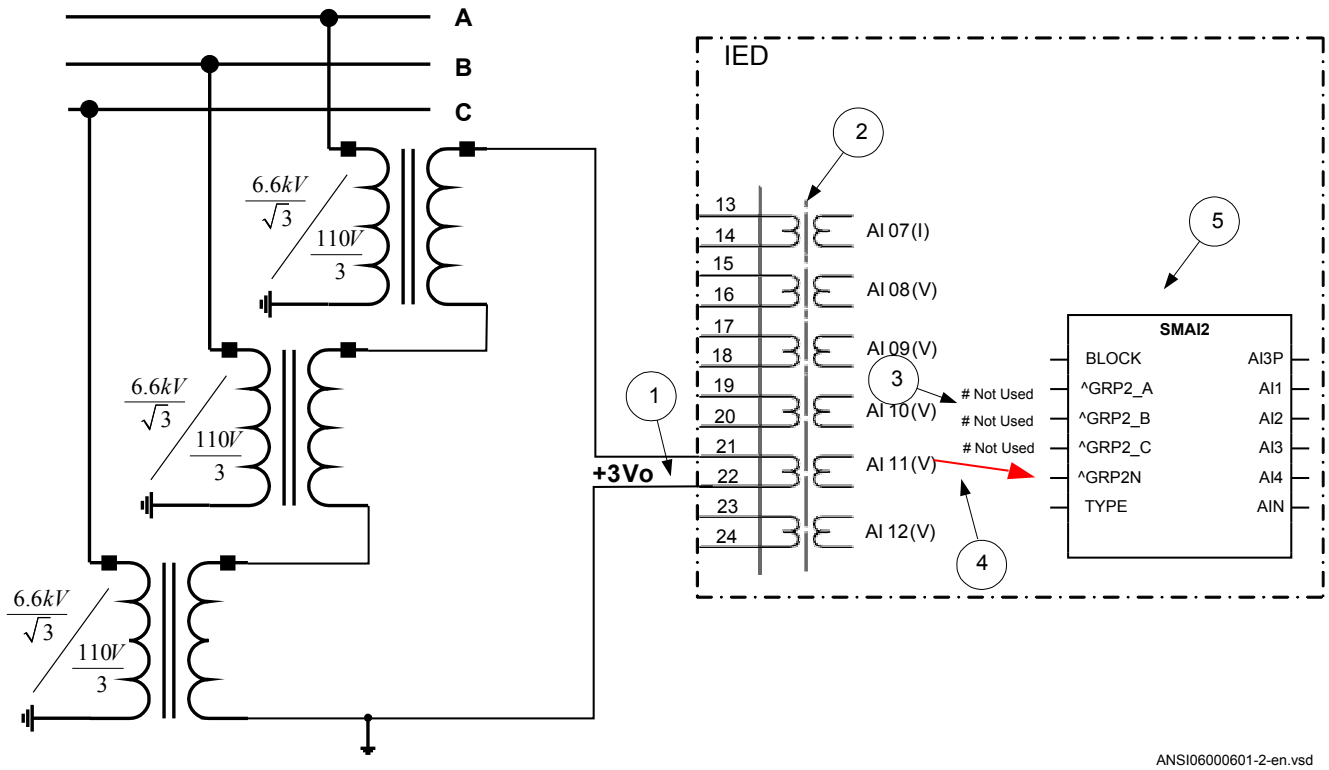

Figure 17: Open delta connected VT in high impedance grounded power system

Where:

1) shows how to connect the secondary side of the open delta VT to one VT input on the IED.

+3Vo shall be connected to the IED

2) is the TRM where this voltage input is located. It shall be noted that for this voltage input the following setting values shall be entered:

$$VTprim = \sqrt{3} \cdot 6.6 = 11.43kV$$

(Equation 15)

$$VT\sec = 3 \cdot \frac{110}{3} = 110V$$

(Equation 16)

Inside the IED, only the ratio of these two parameters is used. It shall be noted that the ratio of the entered values exactly corresponds to ratio of one individual open delta VT.

$$\frac{\sqrt{3} \cdot 6.6}{110} = \frac{6.6/\sqrt{3}}{110/3}$$

(Equation 17)

3) shows that in this example the first three input channel of the preprocessing block is not connected in SMT tool or ACT tool.

4) shows the connection made in Signal Matrix Tool (SMT), Application configuration tool (ACT), which connect this voltage input to the fourth input channel of the preprocessing function block 5).

5) is a Preprocessing block that has the task to digitally filter the connected analog input and calculate:

- fundamental frequency phasors for all four input channels
- harmonic content for all four input channels
- positive, negative and zero sequence quantities by using the fundamental frequency phasors for the first three input channels (channel one taken as reference for sequence quantities)

These calculated values are then available for all built-in protection and control functions within the IED, which are connected to this preprocessing function block in the configuration tool. For this application most of the preprocessing settings can be left to the default values. If frequency tracking and compensation is required (this feature is typically required only for IEDs installed in the generating stations) then the setting parameters *DFTReference* shall be set accordingly.

Example how to connect the open delta VT to the IED for low impedance grounded or solidly grounded power systems

Figure 18 gives an example about the connection of an open delta VT to the IED for low impedance grounded or solidly grounded power systems. It shall be noted that this type of VT connection presents secondary voltage proportional to $3V_0$ to the IED.

In case of a solid ground fault close to the VT location the primary value of 3Vo will be equal to:

$$3Vo = \frac{V_{Ph-Ph}}{\sqrt{3}} = V_{Ph-Gnd}$$

(Equation 18)

The primary rated voltage of such VT is always equal to VPh-Gnd. Therefore, three series connected VT secondary windings will give the secondary voltage equal only to one individual VT secondary winding rating. Thus the secondary windings of such open delta VTs quite often has a secondary rated voltage close to rated phase-to-phase VT secondary voltage, that is, 115V or 115/√3V as in this particular example. Figure 18 gives an overview of the actions which are needed to make this measurement available to the built-in protection and control functions within the IED.

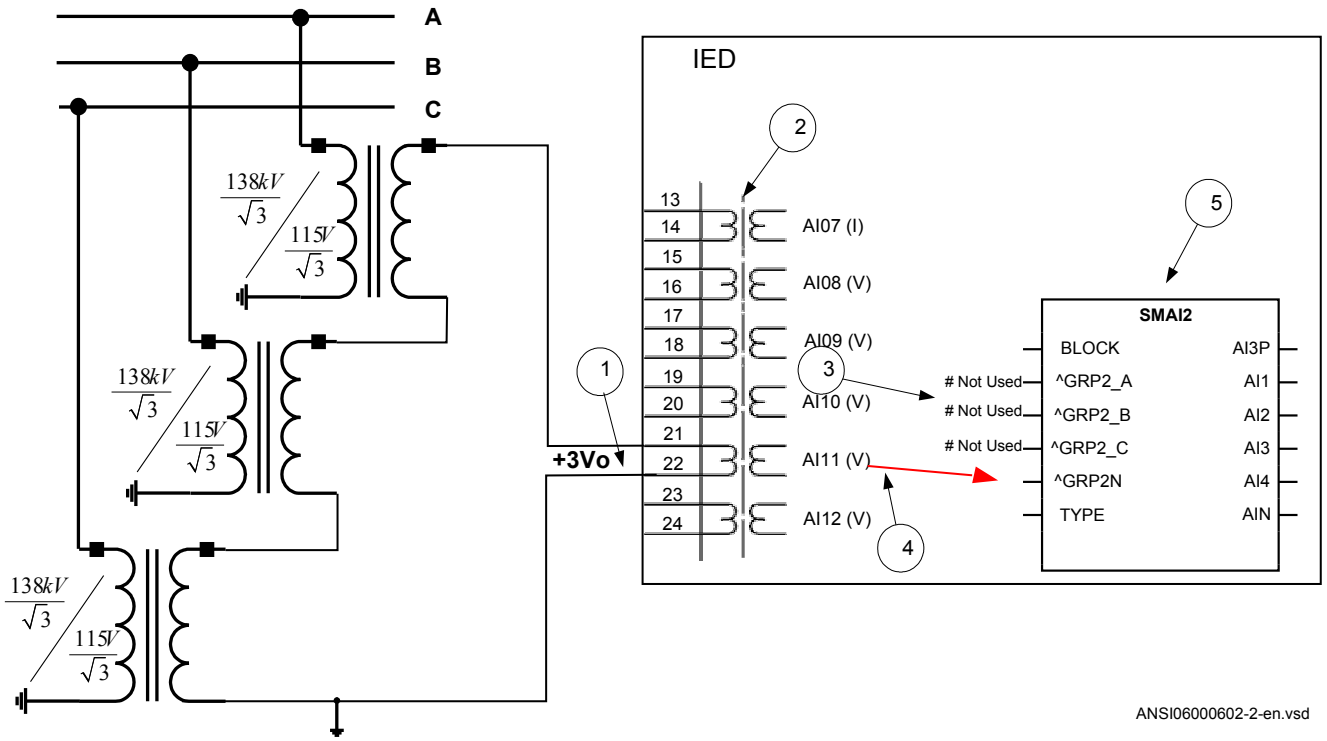

Figure 18: Open delta connected VT in low impedance or solidly grounded power system

Where:

1) shows how to connect the secondary side of open delta VT to one VT input in the IED.

+3Vo shall be connected to the IED.

2) is TRM where this voltage input is located. It shall be noted that for this voltage input the following setting values shall be entered:

$$VTprim = \sqrt{3} \cdot \frac{138}{\sqrt{3}} = 138kV$$

(Equation 19)

$$VT\sec = \sqrt{3} \cdot \frac{115}{\sqrt{3}} = 115V$$

(Equation 20)

Inside the IED, only the ratio of these two parameters is used. It shall be noted that the ratio of the entered values exactly corresponds to ratio of one individual open delta VT.

$$\frac{138}{115} = \frac{138/\sqrt{3}}{115/\sqrt{3}}$$

(Equation 21)

3) shows that in this example the first three input channel of the preprocessing block is not connected in SMT tool.

4) shows the connection made in Signal Matrix Tool (SMT), which connect this voltage input to the fourth input channel of the preprocessing function block 4).

5) preprocessing block has a task to digitally filter the connected analog inputs and calculate:

- fundamental frequency phasors for all four input channels
- harmonic content for all four input channels
- positive, negative and zero sequence quantities by using the fundamental frequency phasors for the first three input channels (channel one taken as reference for sequence quantities)

These calculated values are then available for all built-in protection and control functions within the IED, which are connected to this preprocessing function block in the configuration tool. For this application most of the preprocessing settings can be left to the default values.
If frequency tracking and compensation is required (this feature is typically required only for IEDs installed in the generating stations) then the setting parameters *DFTReference* shall be set accordingly.

Example on how to connect a neutral point VT to the IED

Figure 19 gives an example on how to connect a neutral point VT to the IED. This type of VT connection presents secondary voltage proportional to V_0 to the IED.

In case of a solid ground fault in high impedance grounded or ungrounded systems the primary value of V_0 voltage will be equal to:

$$V0 = \frac{V_{ph-ph}}{\sqrt{3}} = V_{ph-Gnd}$$

(Equation 22)

Figure 19 gives an overview of required actions by the user in order to make this measurement available to the built-in protection and control functions within the IED as well.

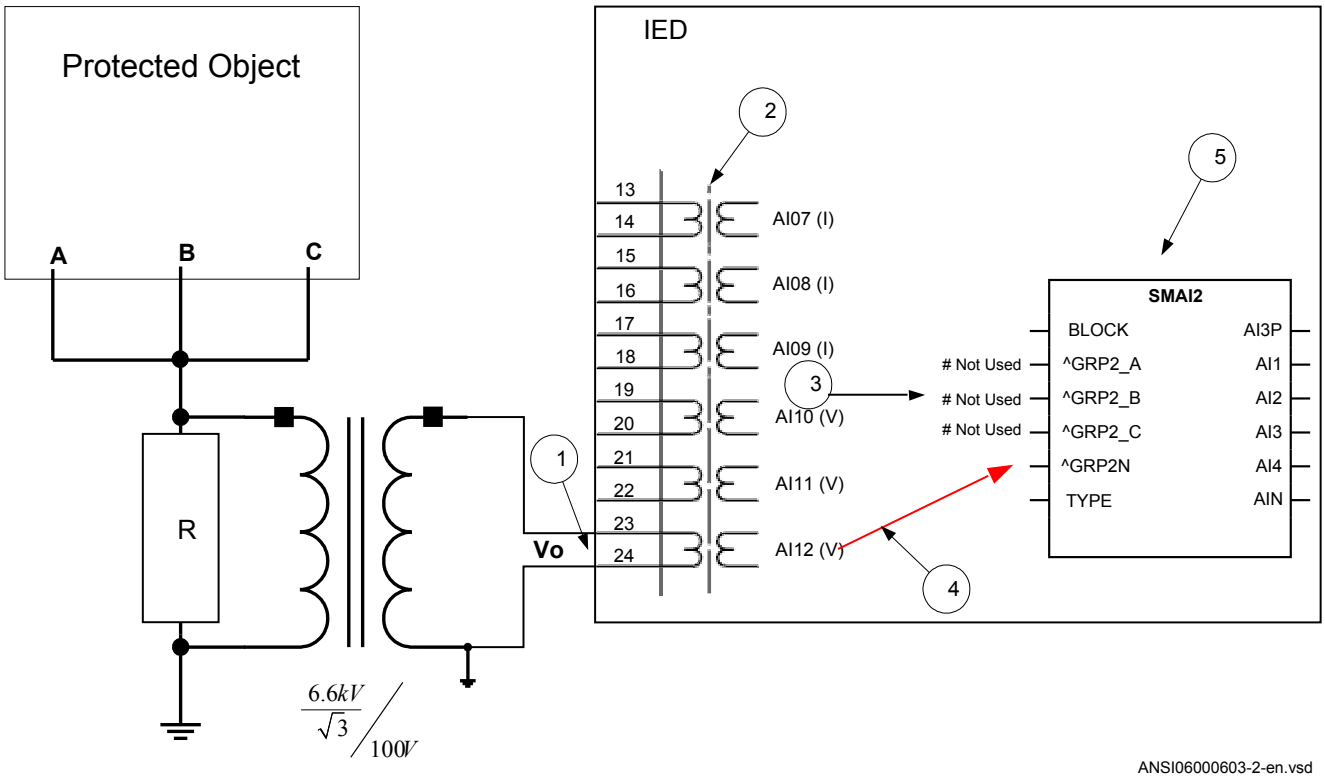

Figure 19: Neutral point connected VT

Where:

1) shows how to connect the secondary side of neutral point VT to one VT input in the IED.

V_0 shall be connected to the IED.

2) is the TRM or AIM where this voltage input is located. For this voltage input the following setting values shall be entered:

$$VTprim = \frac{6.6}{\sqrt{3}} = 3.81kV$$

(Equation 23)

$$VT\sec = 100V$$

(Equation 24)

Inside the IED, only the ratio of these two parameters is used. It shall be noted that the ratio of the entered values exactly corresponds to ratio of the neutral point VT.

3) shows that in this example the first three input channel of the preprocessing block is not connected in SMT tool or ACT tool.

4) shows the connection made in Signal Matrix Tool (SMT), Application configuration tool (ACT), which connects this voltage input to the fourth input channel of the preprocessing function block 5).

5) is a preprocessing block that has the task to digitally filter the connected analog inputs and calculate:

- fundamental frequency phasors for all four input channels
- harmonic content for all four input channels
- positive, negative and zero sequence quantities by using the fundamental frequency phasors for the first three input channels (channel one taken as reference for sequence quantities)

These calculated values are then available for all built-in protection and control functions within the IED, which are connected to this preprocessing function block in the configuration tool. For this application most of the preprocessing settings can be left to the default values.
If frequency tracking and compensation is required (this feature is typically required only for IEDs installed in the generating stations) then the setting parameters *DFTReference* shall be set accordingly.

3.2.3 Setting parameters

The available setting parameters related to analog inputs are depending on the actual hardware (TRM) and the logic configuration made in PCM600.

Table 1: AISVBAS Non group settings (basic)

Name	Values (Range)	Unit	Step	Default	Description
PhaseAngleRef	TRM40-Ch1 TRM40-Ch2 TRM40-Ch3 TRM40-Ch4 TRM40-Ch5 TRM40-Ch6 TRM40-Ch7 TRM40-Ch8 TRM40-Ch9 TRM40-Ch10 TRM40-Ch11 TRM40-Ch12 TRM41-Ch1 TRM41-Ch2 TRM41-Ch3 TRM41-Ch4 TRM41-Ch5 TRM41-Ch6 TRM41-Ch7 TRM41-Ch8 TRM41-Ch9 TRM41-Ch10 TRM41-Ch11 TRM41-Ch12 MU1-IA MU1-IB MU1-IC MU1-I0 MU1- VA MU1- VB MU1-VC MU1-V0 MU2-IA MU2-IB MU2-IC MU2-I0 MU2-VA MU2-VB MU2-VC MU2-V0 MU3-IA MU3-IB MU3-IC MU3-I0 MU3-VB MU2-VB MU3-VC MU3-V0	-	-	TRM40-Ch1	Reference channel for phase angle presentation

Table 2: TRM_12I Non group settings (basic)

Name	Values (Range)	Unit	Step	Default	Description
CT_WyePoint1	FromObject ToObject	-	-	ToObject	ToObject= towards protected object, FromObject= the opposite
CTsec1	1 - 10	A	1	1	Rated CT secondary current
CTprim1	1 - 99999	A	1	3000	Rated CT primary current
CT_WyePoint2	FromObject ToObject	-	-	ToObject	ToObject= towards protected object, FromObject= the opposite
CTsec2	1 - 10	A	1	1	Rated CT secondary current
CTprim2	1 - 99999	A	1	3000	Rated CT primary current
CT_WyePoint3	FromObject ToObject	-	-	ToObject	ToObject= towards protected object, FromObject= the opposite
CTsec3	1 - 10	A	1	1	Rated CT secondary current
CTprim3	1 - 99999	A	1	3000	Rated CT primary current
CT_WyePoint4	FromObject ToObject	-	-	ToObject	ToObject= towards protected object, FromObject= the opposite
CTsec4	1 - 10	A	1	1	Rated CT secondary current
CTprim4	1 - 99999	A	1	3000	Rated CT primary current
CT_WyePoint5	FromObject ToObject	-	-	ToObject	ToObject= towards protected object, FromObject= the opposite
CTsec5	1 - 10	A	1	1	Rated CT secondary current
CTprim5	1 - 99999	A	1	3000	Rated CT primary current
CT_WyePoint6	FromObject ToObject	-	-	ToObject	ToObject= towards protected object, FromObject= the opposite
CTsec6	1 - 10	A	1	1	Rated CT secondary current
CTprim6	1 - 99999	A	1	3000	Rated CT primary current
CT_WyePoint7	FromObject ToObject	-	-	ToObject	ToObject= towards protected object, FromObject= the opposite
CTsec7	1 - 10	A	1	1	Rated CT secondary current
CTprim7	1 - 99999	A	1	3000	Rated CT primary current
CT_WyePoint8	FromObject ToObject	-	-	ToObject	ToObject= towards protected object, FromObject= the opposite
CTsec8	1 - 10	A	1	1	Rated CT secondary current
CTprim8	1 - 99999	A	1	3000	Rated CT primary current
CT_WyePoint9	FromObject ToObject	-	-	ToObject	ToObject= towards protected object, FromObject= the opposite
CTsec9	1 - 10	A	1	1	Rated CT secondary current
CTprim9	1 - 99999	A	1	3000	Rated CT primary current
CT_WyePoint10	FromObject ToObject	-	-	ToObject	ToObject= towards protected object, FromObject= the opposite
CTsec10	1 - 10	A	1	1	Rated CT secondary current

Table continues on next page

Name	Values (Range)	Unit	Step	Default	Description
CTprim10	1 - 99999	A	1	3000	Rated CT primary current
CT_WyePoint11	FromObject ToObject	-	-	ToObject	ToObject= towards protected object, FromObject= the opposite
CTsec11	1 - 10	A	1	1	Rated CT secondary current
CTprim11	1 - 99999	A	1	3000	Rated CT primary current
CT_WyePoint12	FromObject ToObject	-	-	ToObject	ToObject= towards protected object, FromObject= the opposite
CTsec12	1 - 10	A	1	1	Rated CT secondary current
CTprim12	1 - 99999	A	1	3000	Rated CT primary current

Table 3: TRM_6I_6U Non group settings (basic)

Name	Values (Range)	Unit	Step	Default	Description
CT_WyePoint1	FromObject ToObject	-	-	ToObject	ToObject= towards protected object, FromObject= the opposite
CTsec1	1 - 10	A	1	1	Rated CT secondary current
CTprim1	1 - 99999	A	1	3000	Rated CT primary current
CT_WyePoint2	FromObject ToObject	-	-	ToObject	ToObject= towards protected object, FromObject= the opposite
CTsec2	1 - 10	A	1	1	Rated CT secondary current
CTprim2	1 - 99999	A	1	3000	Rated CT primary current
CT_WyePoint3	FromObject ToObject	-	-	ToObject	ToObject= towards protected object, FromObject= the opposite
CTsec3	1 - 10	A	1	1	Rated CT secondary current
CTprim3	1 - 99999	A	1	3000	Rated CT primary current
CT_WyePoint4	FromObject ToObject	-	-	ToObject	ToObject= towards protected object, FromObject= the opposite
CTsec4	1 - 10	A	1	1	Rated CT secondary current
CTprim4	1 - 99999	A	1	3000	Rated CT primary current
CT_WyePoint5	FromObject ToObject	-	-	ToObject	ToObject= towards protected object, FromObject= the opposite
CTsec5	1 - 10	A	1	1	Rated CT secondary current
CTprim5	1 - 99999	A	1	3000	Rated CT primary current
CT_WyePoint6	FromObject ToObject	-	-	ToObject	ToObject= towards protected object, FromObject= the opposite
CTsec6	1 - 10	A	1	1	Rated CT secondary current
CTprim6	1 - 99999	A	1	3000	Rated CT primary current
VTsec7	0.001 - 999.999	V	0.001	110.000	Rated VT secondary voltage
VTprim7	0.05 - 2000.00	kV	0.05	400.00	Rated VT primary voltage
VTsec8	0.001 - 999.999	V	0.001	110.000	Rated VT secondary voltage

Table continues on next page

Name	Values (Range)	Unit	Step	Default	Description
VTprim8	0.05 - 2000.00	kV	0.05	400.00	Rated VT primary voltage
VTsec9	0.001 - 999.999	V	0.001	110.000	Rated VT secondary voltage
VTprim9	0.05 - 2000.00	kV	0.05	400.00	Rated VT primary voltage
VTsec10	0.001 - 999.999	V	0.001	110.000	Rated VT secondary voltage
VTprim10	0.05 - 2000.00	kV	0.05	400.00	Rated VT primary voltage
VTsec11	0.001 - 999.999	V	0.001	110.000	Rated VT secondary voltage
VTprim11	0.05 - 2000.00	kV	0.05	400.00	Rated VT primary voltage
VTsec12	0.001 - 999.999	V	0.001	110.000	Rated VT secondary voltage
VTprim12	0.05 - 2000.00	kV	0.05	400.00	Rated VT primary voltage

Table 4: TRM_6I Non group settings (basic)

Name	Values (Range)	Unit	Step	Default	Description
CT_WyePoint1	FromObject ToObject	-	-	ToObject	ToObject= towards protected object, FromObject= the opposite
CTsec1	1 - 10	A	1	1	Rated CT secondary current
CTprim1	1 - 99999	A	1	3000	Rated CT primary current
CT_WyePoint2	FromObject ToObject	-	-	ToObject	ToObject= towards protected object, FromObject= the opposite
CTsec2	1 - 10	A	1	1	Rated CT secondary current
CTprim2	1 - 99999	A	1	3000	Rated CT primary current
CT_WyePoint3	FromObject ToObject	-	-	ToObject	ToObject= towards protected object, FromObject= the opposite
CTsec3	1 - 10	A	1	1	Rated CT secondary current
CTprim3	1 - 99999	A	1	3000	Rated CT primary current
CT_WyePoint4	FromObject ToObject	-	-	ToObject	ToObject= towards protected object, FromObject= the opposite
CTsec4	1 - 10	A	1	1	Rated CT secondary current
CTprim4	1 - 99999	A	1	3000	Rated CT primary current
CT_WyePoint5	FromObject ToObject	-	-	ToObject	ToObject= towards protected object, FromObject= the opposite
CTsec5	1 - 10	A	1	1	Rated CT secondary current
CTprim5	1 - 99999	A	1	3000	Rated CT primary current
CT_WyePoint6	FromObject ToObject	-	-	ToObject	ToObject= towards protected object, FromObject= the opposite
CTsec6	1 - 10	A	1	1	Rated CT secondary current
CTprim6	1 - 99999	A	1	3000	Rated CT primary current

Table 5: TRM_7I_5U Non group settings (basic)

Name	Values (Range)	Unit	Step	Default	Description
CT_WyePoint1	FromObject ToObject	-	-	ToObject	ToObject= towards protected object, FromObject= the opposite
CTsec1	1 - 10	A	1	1	Rated CT secondary current
CTprim1	1 - 99999	A	1	3000	Rated CT primary current
CT_WyePoint2	FromObject ToObject	-	-	ToObject	ToObject= towards protected object, FromObject= the opposite
CTsec2	1 - 10	A	1	1	Rated CT secondary current
CTprim2	1 - 99999	A	1	3000	Rated CT primary current
CT_WyePoint3	FromObject ToObject	-	-	ToObject	ToObject= towards protected object, FromObject= the opposite
CTsec3	1 - 10	A	1	1	Rated CT secondary current
CTprim3	1 - 99999	A	1	3000	Rated CT primary current
CT_WyePoint4	FromObject ToObject	-	-	ToObject	ToObject= towards protected object, FromObject= the opposite
CTsec4	1 - 10	A	1	1	Rated CT secondary current
CTprim4	1 - 99999	A	1	3000	Rated CT primary current
CT_WyePoint5	FromObject ToObject	-	-	ToObject	ToObject= towards protected object, FromObject= the opposite
CTsec5	1 - 10	A	1	1	Rated CT secondary current
CTprim5	1 - 99999	A	1	3000	Rated CT primary current
CT_WyePoint6	FromObject ToObject	-	-	ToObject	ToObject= towards protected object, FromObject= the opposite
CTsec6	1 - 10	A	1	1	Rated CT secondary current
CTprim6	1 - 99999	A	1	3000	Rated CT primary current
CT_WyePoint7	FromObject ToObject	-	-	ToObject	ToObject= towards protected object, FromObject= the opposite
CTsec7	1 - 10	A	1	1	Rated CT secondary current
CTprim7	1 - 99999	A	1	3000	Rated CT primary current
VTsec8	0.001 - 999.999	V	0.001	110.000	Rated VT secondary voltage
VTprim8	0.05 - 2000.00	kV	0.05	400.00	Rated VT primary voltage
VTsec9	0.001 - 999.999	V	0.001	110.000	Rated VT secondary voltage
VTprim9	0.05 - 2000.00	kV	0.05	400.00	Rated VT primary voltage
VTsec10	0.001 - 999.999	V	0.001	110.000	Rated VT secondary voltage
VTprim10	0.05 - 2000.00	kV	0.05	400.00	Rated VT primary voltage
VTsec11	0.001 - 999.999	V	0.001	110.000	Rated VT secondary voltage
VTprim11	0.05 - 2000.00	kV	0.05	400.00	Rated VT primary voltage
VTsec12	0.001 - 999.999	V	0.001	110.000	Rated VT secondary voltage
VTprim12	0.05 - 2000.00	kV	0.05	400.00	Rated VT primary voltage

Table 6: TRM_9I_3U Non group settings (basic)

Name	Values (Range)	Unit	Step	Default	Description
CT_WyePoint1	FromObject ToObject	-	-	ToObject	ToObject= towards protected object, FromObject= the opposite
CTsec1	1 - 10	A	1	1	Rated CT secondary current
CTprim1	1 - 99999	A	1	3000	Rated CT primary current
CT_WyePoint2	FromObject ToObject	-	-	ToObject	ToObject= towards protected object, FromObject= the opposite
CTsec2	1 - 10	A	1	1	Rated CT secondary current
CTprim2	1 - 99999	A	1	3000	Rated CT primary current
CT_WyePoint3	FromObject ToObject	-	-	ToObject	ToObject= towards protected object, FromObject= the opposite
CTsec3	1 - 10	A	1	1	Rated CT secondary current
CTprim3	1 - 99999	A	1	3000	Rated CT primary current
CT_WyePoint4	FromObject ToObject	-	-	ToObject	ToObject= towards protected object, FromObject= the opposite
CTsec4	1 - 10	A	1	1	Rated CT secondary current
CTprim4	1 - 99999	A	1	3000	Rated CT primary current
CT_WyePoint5	FromObject ToObject	-	-	ToObject	ToObject= towards protected object, FromObject= the opposite
CTsec5	1 - 10	A	1	1	Rated CT secondary current
CTprim5	1 - 99999	A	1	3000	Rated CT primary current
CT_WyePoint6	FromObject ToObject	-	-	ToObject	ToObject= towards protected object, FromObject= the opposite
CTsec6	1 - 10	A	1	1	Rated CT secondary current
CTprim6	1 - 99999	A	1	3000	Rated CT primary current
CT_WyePoint7	FromObject ToObject	-	-	ToObject	ToObject= towards protected object, FromObject= the opposite
CTsec7	1 - 10	A	1	1	Rated CT secondary current
CTprim7	1 - 99999	A	1	3000	Rated CT primary current
CT_WyePoint8	FromObject ToObject	-	-	ToObject	ToObject= towards protected object, FromObject= the opposite
CTsec8	1 - 10	A	1	1	Rated CT secondary current
CTprim8	1 - 99999	A	1	3000	Rated CT primary current
CT_WyePoint9	FromObject ToObject	-	-	ToObject	ToObject= towards protected object, FromObject= the opposite
CTsec9	1 - 10	A	1	1	Rated CT secondary current
CTprim9	1 - 99999	A	1	3000	Rated CT primary current
VTsec10	0.001 - 999.999	V	0.001	110.000	Rated VT secondary voltage
VTprim10	0.05 - 2000.00	kV	0.05	400.00	Rated VT primary voltage
VTsec11	0.001 - 999.999	V	0.001	110.000	Rated VT secondary voltage

Table continues on next page

Name	Values (Range)	Unit	Step	Default	Description
VTprim11	0.05 - 2000.00	kV	0.05	400.00	Rated VT primary voltage
VTsec12	0.001 - 999.999	V	0.001	110.000	Rated VT secondary voltage
VTprim12	0.05 - 2000.00	kV	0.05	400.00	Rated VT primary voltage

3.3 Local human-machine interface

3.3.1 Human machine interface

The local human machine interface is available in a medium sized model. Up to 12 single line diagram pages can be defined, depending on the product capability.

The local HMI is divided into zones with different functionality.

- Status indication LEDs.
- Alarm indication LEDs, which consist of 15 LEDs (6 red and 9 yellow) with user printable label. All LEDs are configurable from PCM600.
- Liquid crystal display (LCD).
- Keypad with push buttons for control and navigation purposes, switch for selection between local and remote control and reset.
- Isolated RJ45 communication port.

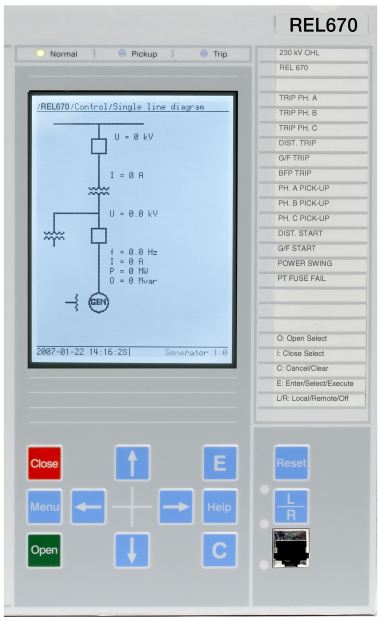

Figure 20: Medium graphic HMI, 15 controllable objects

3.3.2 Local HMI related functions

3.3.2.1 Introduction

The local HMI can be adapted to the application configuration and to user preferences.

- Function block LocalHMI
- Function block LEDGEN
- Setting parameters

3.3.2.2 General setting parameters

Table 7: SCREEN Non group settings (basic)

Name	Values (Range)	Unit	Step	Default	Description
Language	English OptionalLanguage	-	-	English	Local HMI language
DisplayTimeout	10 - 120	Min	10	60	Local HMI display timeout
AutoRepeat	Disabled Enabled	-	-	Enabled	Activation of auto-repeat (On) or not (Off)
ContrastLevel	-10 - 20	%	1	0	Contrast level for display
Table continues on next page					

Name	Values (Range)	Unit	Step	Default	Description
DefaultScreen	0 - 0	-	1	0	Default screen
EvListSrtOrder	Latest on top Oldest on top	-	-	Latest on top	Sort order of event list
SymbolFont	IEC ANSI	-	-	IEC	Symbol font for Single Line Diagram

3.3.3 Indication LEDs

3.3.3.1 Introduction

The function block LEDGEN controls and supplies information about the status of the indication LEDs. The input and output signals of LEDGEN are configured with PCM600. The input signal for each LED is selected individually with the Signal Matrix Tool in PCM600.

- LEDs (number 1–6) for trip indications are red.
- LEDs (number 7–15) for pickup indications are yellow.

Each indication LED on the local HMI can be set individually to operate in six different sequences

- Two sequences operate as follow type.
- Four sequences operate as latch type.
    - Two of the latching sequence types are intended to be used as a protection indication system, either in collecting or restarting mode, with reset functionality.
    - Two of the latching sequence types are intended to be used as signaling system in collecting (coll) mode with an acknowledgment functionality.

The light from the LEDs can be steady (-S) or flashing (-F). See the technical reference manual for more information.

3.3.3.2 Setting parameters

Table 8: LEDGEN Non group settings (basic)

Name	Values (Range)	Unit	Step	Default	Description
Operation	Disabled Enabled	-	-	Disabled	Operation mode for the LED function
tRestart	0.0 - 100.0	s	0.1	0.0	Defines the disturbance length
tMax	0.0 - 100.0	s	0.1	0.0	Maximum time for the definition of a disturbance
SeqTypeLED1	Follow-S Follow-F LatchedAck-F-S LatchedAck-S-F LatchedColl-S LatchedReset-S	-	-	Follow-S	Sequence type for LED 1
SeqTypeLED2	Follow-S Follow-F LatchedAck-F-S LatchedAck-S-F LatchedColl-S LatchedReset-S	-	-	Follow-S	Sequence type for LED 2
SeqTypeLED3	Follow-S Follow-F LatchedAck-F-S LatchedAck-S-F LatchedColl-S LatchedReset-S	-	-	Follow-S	Sequence type for LED 3
SeqTypeLED4	Follow-S Follow-F LatchedAck-F-S LatchedAck-S-F LatchedColl-S LatchedReset-S	-	-	Follow-S	Sequence type for LED 4
SeqTypeLED5	Follow-S Follow-F LatchedAck-F-S LatchedAck-S-F LatchedColl-S LatchedReset-S	-	-	Follow-S	Sequence type for LED 5
SeqTypeLED6	Follow-S Follow-F LatchedAck-F-S LatchedAck-S-F LatchedColl-S LatchedReset-S	-	-	Follow-S	Sequence type for LED 6
SeqTypeLED7	Follow-S Follow-F LatchedAck-F-S LatchedAck-S-F LatchedColl-S LatchedReset-S	-	-	Follow-S	Sequence type for LED 7

Table continues on next page

Name	Values (Range)	Unit	Step	Default	Description
SeqTypeLED8	Follow-S Follow-F LatchedAck-F-S LatchedAck-S-F LatchedColl-S LatchedReset-S	-	-	Follow-S	sequence type for LED 8
SeqTypeLED9	Follow-S Follow-F LatchedAck-F-S LatchedAck-S-F LatchedColl-S LatchedReset-S	-	-	Follow-S	Sequence type for LED 9
SeqTypeLED10	Follow-S Follow-F LatchedAck-F-S LatchedAck-S-F LatchedColl-S LatchedReset-S	-	-	Follow-S	Sequence type for LED 10
SeqTypeLED11	Follow-S Follow-F LatchedAck-F-S LatchedAck-S-F LatchedColl-S LatchedReset-S	-	-	Follow-S	Sequence type for LED 11
SeqTypeLED12	Follow-S Follow-F LatchedAck-F-S LatchedAck-S-F LatchedColl-S LatchedReset-S	-	-	Follow-S	Sequence type for LED 12
SeqTypeLED13	Follow-S Follow-F LatchedAck-F-S LatchedAck-S-F LatchedColl-S LatchedReset-S	-	-	Follow-S	Sequence type for LED 13
SeqTypeLED14	Follow-S Follow-F LatchedAck-F-S LatchedAck-S-F LatchedColl-S LatchedReset-S	-	-	Follow-S	Sequence type for LED 14
SeqTypeLED15	Follow-S Follow-F LatchedAck-F-S LatchedAck-S-F LatchedColl-S LatchedReset-S	-	-	Follow-S	Sequence type for LED 15

3.4 Basic IED functions

3.4.1 Self supervision with internal event list

3.4.1.1 Application

The protection and control IEDs have many functions included . The included self-supervision with internal event list function block provides good supervision of the IED. The fault signals make it easier to analyze and locate a fault.

Both hardware and software supervision is included and it is also possible to indicate possible faults through a hardware contact on the power supply module and/or through the software communication.

Internal events are generated by the built-in supervisory functions. The supervisory functions supervise the status of the various modules in the IED and, in case of failure, a corresponding event is generated. Similarly, when the failure is corrected, a corresponding event is generated.

Apart from the built-in supervision of the various modules, events are also generated when the status changes for the:

- built-in real time clock (in operation/out of order).
- external time synchronization (in operation/out of order).

Events are also generated:

- whenever any setting in the IED is changed.

The internal events are time tagged with a resolution of 1 ms and stored in a list. The list can store up to 40 events. The list is based on the FIFO principle, that is, when it is full, the oldest event is overwritten. The list contents cannot be modified, but the whole list can be cleared using the Reset menu in the LHMI.

The list of internal events provides valuable information, which can be used during commissioning and fault tracing.

The information can only be retrieved with the aid of PCM600 Event Monitoring Tool. The PC can either be connected to the front port, or to the port at the back of the IED.

3.4.1.2 Setting parameters

The function does not have any parameters available in the local HMI or PCM600.

3.4.2 Time synchronization

3.4.2.1 Application

Use time synchronization to achieve a common time base for the IEDs in a protection and control system. This makes it possible to compare events and disturbance data between all IEDs in the system.

Time-tagging of internal events and disturbances are an excellent help when evaluating faults. Without time synchronization, only the events within the IED can be compared to one another. With time synchronization, events and disturbances within the entire station, and even between line ends, can be compared at evaluation.

In the IED, the internal time can be synchronized from a number of sources:

- BIN (Binary Minute Pulse)
- GPS
- SNTP
- IRIG-B
- SPA
- LON
- PPS

For time synchronization of line differential protection RED670 with diff communication in GPS-mode, a GPS-based time synchronization is needed. This can be optical IRIG-B with 1344 from an external GPS-clock or an internal GPS-receiver.

Odut of these, LON and SPA contains two types of synchronization messages:

- Coarse time messages are sent every minute and contain complete date and time, that is year, month, day, hour, minute, second and millisecond.
- Fine time messages are sent every second and comprise only seconds and milliseconds.

The setting tells the IED which of these that shall be used to synchronize the IED.

It is possible to set a backup time-source for GPS signal, for instance SNTP. In this case, when the GPS signal quality is bad, the IED will automatically choose SNTP as the time-source. At a given point in time, only one time-source will be used.

3.4.2.2 Setting guidelines

System time

The time is set with years, month, day, hour, minute, second and millisecond.

Synchronization

The setting parameters for the real-time clock with external time synchronization (TIME) are set via local HMI or PCM600.

TimeSynch

When the source of the time synchronization is selected on the local HMI, the parameter is called *TimeSynch*. The time synchronization source can also be set from PCM600. The setting alternatives are:

FineSyncSource which can have the following values:

- *Disabled*
- *SPA*
- *LON*
- *BIN* (Binary Minute Pulse)
- *GPS*
- *GPS+SPA*
- *GPS+LON*
- *GPS+BIN*
- *SNTP*
- *GPS+SNTP*
- *GPS+IRIG-B*
- *IRIG-B*
- *PPS*

CoarseSyncSrc which can have the following values:

- *Disabled*
- *SPA*
- *LON*
- *SNTP*
- *DNP*

CoarseSyncSrc which can have the following values:

-
- *SNTP*
- *DNP*
- *IEC60870-5-103*

The function input to be used for minute-pulse synchronization is called TIME-MINSYNC.

The system time can be set manually, either via the local HMI or via any of the communication ports. The time synchronization fine tunes the clock (seconds and milliseconds).

The parameter *SyncMaster* defines if the IED is a master, or not a master for time synchronization in a system of IEDs connected in a communication network (IEC61850-8-1). The *SyncMaster* can have the following values:

- *Disabled*
- *SNTP -Server*

Set the course time synchronizing source (*CoarseSyncSrc*) to *Disabled* when GPS time synchronization of line differential function is used. Set the fine time synchronization source (*FineSyncSource*) to *GPS*. The GPS will thus provide the complete time synchronization. GPS alone shall synchronize the analogue values in such systems.

HWSyncSrc: This parameter must not be set to *Disabled* if *AppSynch* is set to *Synch*. If set to *Disabled* the time quality in the IED will never reach *SyncAccLevel* and some functions are blocked. See section "IEC 61850-9-2LE communication protocol" in section "Station communication".

AppSynch: If this parameter is set to *Synch*, some functions are blocked, see section "IEC 61850-9-2LE communication protocol" in section "Station communication", if the time quality is worse than the limit set by *SyncAccLevel*.

SyncAccLevel: If this parameter is set to *Unspecified*, time quality will always be not sufficient, thereby some functions are blocked.

Process bus IEC 61850-9-2LE synchronization

For the time synchronization of the process bus communication (IEC 61850-9-2LE protocol) an optical PPS or IRIG-B signal can be used. This signal should emanate from either an external GPS clock, or from the merging unit.

An optical PPS signal can be supplied to the optical interface of the IRIG-B module.

Time synchronization for differential protection and IEC 61850-9-2LE sampled data

When using differential communication in conjunction with sampled data received from merging units (MU) over the IEC 61850-9-2LE process bus, the MU and the IED needs to be controlled by the same GPS synchronized clock. The required accuracy is +/- 2 µs. The MU needs to get an optic PPS signal from the clock in order to take samples at the correct time and the IED needs to get the time-quality information in IRIG-B, using the 1344 protocol, from the very same clock in order to be able to block in case of failure in the clock source.

The settings for time synchronization should be *CourseSyncSrc = Disabled*, *FineSyncSource = IRIG-B*, *TimeAdjustRate = Fast*. The setting for *Encoding* in SYNCHIRIG-B needs to be set to *1344*.

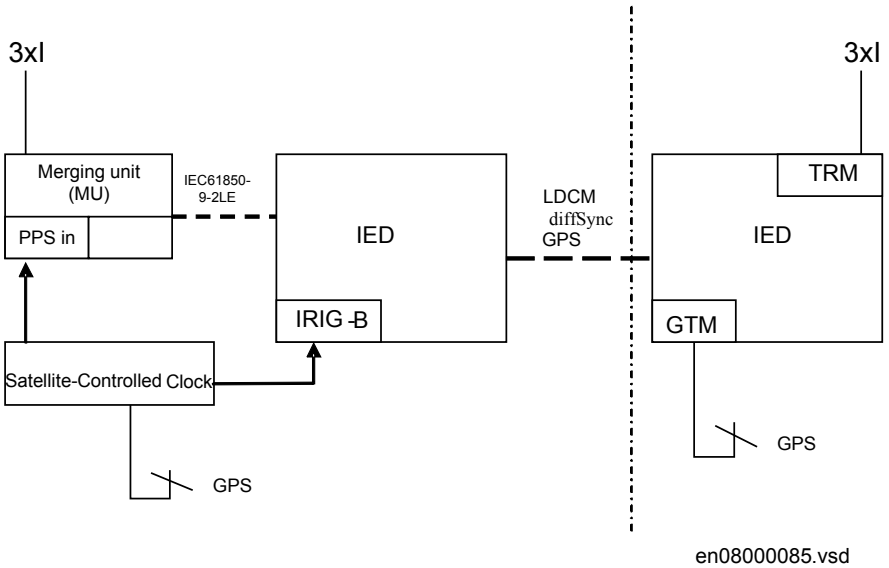

Figure 21: Time synchronization of merging unit and IED

The parameter *DiffSync* for the LDCM needs to be set to *GPS* and the *GPSSyncErr* needs to be set to *Block*.

In "ECHO" mode MU and IED still need to be synchronized. In this case they can be synchronized with either PPS or IRIG-B.

3.4.2.3 Setting parameters

Path in the local HMI is located under **Main menu/Setting/Time**

Path in PCM600 is located under **Main menu/Settings/Time/Synchronization**

Table 9: TIMESYNCHGEN Non group settings (basic)

Name	Values (Range)	Unit	Step	Default	Description
CoarseSyncSrc	Disabled SPA LON SNTP DNP	-	-	Disabled	Coarse time synchronization source
FineSyncSource	Disabled SPA LON BIN GPS GPS+SPA GPS+LON GPS+BIN SNTP GPS+SNTP IRIG-B GPS+IRIG-B PPS	-	-	Disabled	Fine time synchronization source
SyncMaster	Disabled SNTP-Server	-	-	Disabled	Activate IEDas synchronization master
TimeAdjustRate	Slow Fast	-	-	Slow	Adjust rate for time synchronization

Table 10: SYNCHBIN Non group settings (basic)

Name	Values (Range)	Unit	Step	Default	Description
ModulePosition	3 - 16	-	1	3	Hardware position of IO module for time synchronization
BinaryInput	1 - 16	-	1	1	Binary input number for time synchronization
BinDetection	PositiveEdge NegativeEdge	-	-	PositiveEdge	Positive or negative edge detection

Table 11: SYNCHSNTP Non group settings (basic)

Name	Values (Range)	Unit	Step	Default	Description
ServerIP-Add	0 - 18	IP Address	1	0.0.0.0	Server IP-address
RedServIP-Add	0 - 18	IP Address	1	0.0.0.0	Redundant server IP-address

Table 12: DSTBEGIN Non group settings (basic)

Name	Values (Range)	Unit	Step	Default	Description
MonthInYear	January February March April May June July August September October November December	-	-	March	Month in year when daylight time starts
DayInWeek	Sunday Monday Tuesday Wednesday Thursday Friday Saturday	-	-	Sunday	Day in week when daylight time starts
WeekInMonth	Last First Second Third Fourth	-	-	Last	Week in month when daylight time starts
UTCTimeOfDay	0 - 172800	s	1	3600	UTC Time of day in seconds when daylight time starts

Table 13: DSTEND Non group settings (basic)

Name	Values (Range)	Unit	Step	Default	Description
MonthInYear	January February March April May June July August September October November December	-	-	October	Month in year when daylight time ends
DayInWeek	Sunday Monday Tuesday Wednesday Thursday Friday Saturday	-	-	Sunday	Day in week when daylight time ends
WeekInMonth	Last First Second Third Fourth	-	-	Last	Week in month when daylight time ends
UTCTimeOfDay	0 - 172800	s	1	3600	UTC Time of day in seconds when daylight time ends

Table 14: TIMEZONE Non group settings (basic)

Name	Values (Range)	Unit	Step	Default	Description
NoHalfHourUTC	-24 - 24	-	1	0	Number of half-hours from UTC

Table 15: SYNCHIRIG-B Non group settings (basic)

Name	Values (Range)	Unit	Step	Default	Description
SynchType	BNC Opto	-	-	Opto	Type of synchronization
TimeDomain	LocalTime UTC	-	-	LocalTime	Time domain
Encoding	IRIG-B 1344 1344TZ	-	-	IRIG-B	Type of encoding
TimeZoneAs1344	MinusTZ PlusTZ	-	-	PlusTZ	Time zone as in 1344 standard

3.4.3 Parameter setting groups

3.4.3.1 Application

Six sets of settings are available to optimize IED operation for different power system conditions. By creating and switching between fine tuned setting sets, either from the local HMI or configurable binary inputs, results in a highly adaptable IED that can cope with a variety of power system scenarios.

Different conditions in networks with different voltage levels require highly adaptable protection and control units to best provide for dependability, security and selectivity requirements. Protection units operate with a higher degree of availability, especially, if the setting values of their parameters are continuously optimized according to the conditions in the power system.

Operational departments can plan for different operating conditions in the primary equipment. The protection engineer can prepare the necessary optimized and pre-tested settings in advance for different protection functions. Six

A function block, SETGRPS, defines how many setting groups are used. Setting is done with parameter *MAXSETGR* and shall be set to the required value for each IED. Only the number of setting groups set will be available in the Parameter Setting tool for activation with the ActiveGroup function block.

3.4.3.2 Setting guidelines

The setting *ActiveSetGrp*, is used to select which parameter group to be active. The active group can also be selected with configured input to the function block SETGRPS.

The length of the pulse, sent out by the output signal GRP_CHGD when an active group has changed, is set with the parameter *t*.

The parameter *MAXSETGR* defines the maximum number of setting groups in use to switch between. Only the selected number of setting groups will be available in the Parameter Setting tool (PST) for activation with the ActiveGroup function block.

3.4.3.3 Setting parameters

Table 16: ActiveGroup Non group settings (basic)

Name	Values (Range)	Unit	Step	Default	Description
t	0.0 - 10.0	s	0.1	1.0	Pulse length of pulse when setting changed

Table 17: SETGRPS Non group settings (basic)

Name	Values (Range)	Unit	Step	Default	Description
ActiveSetGrp	SettingGroup1 SettingGroup2 SettingGroup3 SettingGroup4 SettingGroup5 SettingGroup6	-	-	SettingGroup1	ActiveSettingGroup
MAXSETGR	1 - 6	No	1	1	Max number of setting groups 1-6

3.4.4 Test mode functionality TEST

3.4.4.1 Application

The protection and control IEDs may have a complex configuration with many included functions. To make the testing procedure easier, the IEDs include the feature that allows individual blocking of a single-, several-, or all functions.

This means that it is possible to see when a function is activated or trips. It also enables the user to follow the operation of several related functions to check correct functionality and to check parts of the configuration, and so on.

3.4.4.2 Setting guidelines

Remember always that there are two possible ways to place the IED in the *TestMode= Enabled*" state. If, the IED is set to normal operation (*TestMode = Disabled*), but the functions are still shown being in the test mode, the input signal INPUT on the TESTMODE function block might be activated in the configuration.

3.4.4.3 Setting parameters

Table 18: TESTMODE Non group settings (basic)

Name	Values (Range)	Unit	Step	Default	Description
TestMode	Disabled Enabled	-	-	Disabled	Test mode in operation (Enabled) or not (Disabled)
EventDisable	Disabled Enabled	-	-	Disabled	Event disable during testmode
CmdTestBit	Disabled Enabled	-	-	Disabled	Command bit for test required or not during testmode

3.4.5 Change lock CHNGLCK

3.4.5.1 Application

Change lock function CHNGLCK is used to block further changes to the IED configuration once the commissioning is complete. The purpose is to make it impossible to perform inadvertent IED configuration and setting changes.

However, when activated, CHNGLCK will still allow the following actions that does not involve reconfiguring of the IED:

- Monitoring
- Reading events
- Resetting events
- Reading disturbance data
- Clear disturbances
- Reset LEDs
- Reset counters and other runtime component states
- Control operations
- Set system time
- Enter and exit from test mode
- Change of active setting group

The binary input controlling the function is defined in ACT or SMT. The CHNGLCK function is configured using ACT.

LOCK	Binary input signal that will activate/deactivate the function, defined in ACT or SMT.

When CHNGLCK has a logical one on its input, then all attempts to modify the IED configuration and setting will be denied and the message "Error: Changes blocked" will be displayed on the local HMI; in PCM600 the message will be "Operation denied by active ChangeLock". The CHNGLCK function should be configured so that it is controlled by a signal from a binary input card. This guarantees that by setting that signal to a logical zero, CHNGLCK is deactivated. If any logic is included in the signal path to the CHNGLCK input, that logic must be designed so that it cannot permanently issue a logical one to the CHNGLCK input. If such a situation would occur in spite of these precautions, then please contact the local ABB representative for remedial action.

3.4.5.2 Setting parameters

Table 19: CHNGLCK Non group settings (basic)

Name	Values (Range)	Unit	Step	Default	Description
Operation	LockHMI and Com LockHMI, EnableCom EnableHMI, LockCom	-	-	LockHMI and Com	Operation mode of change lock

3.4.6 IED identifiers

3.4.6.1 Application

IED identifiers (TERMINALID) function allows the user to identify the individual IED in the system, not only in the substation, but in a whole region or a country.

Use only characters A-Z, a-z and 0-9 in station, object and unit names.

3.4.6.2 Setting parameters

Table 20: TERMINALID Non group settings (basic)

Name	Values (Range)	Unit	Step	Default	Description
StationName	0 - 18	-	1	Station name	Station name
StationNumber	0 - 99999	-	1	0	Station number
ObjectName	0 - 18	-	1	Object name	Object name
ObjectNumber	0 - 99999	-	1	0	Object number
UnitName	0 - 18	-	1	Unit name	Unit name
UnitNumber	0 - 99999	-	1	0	Unit number

3.4.7 Product information

3.4.7.1 Application

The Product identifiers function identifies the IED. The function has seven pre-set, settings that are unchangeable but nevertheless very important:

- IEDProdType
- ProductDef
- FirmwareVer
- SerialNo
- OrderingNo
- ProductionDate

The settings are visible on the local HMI , under **Main menu/Diagnostics/IED status/ Product identifiers**

They are very helpful in case of support process (such as repair or maintenance).

3.4.7.2 Setting parameters

The function does not have any parameters available in the local HMI or PCM600.

Factory defined settings

The factory defined settings are very useful for identifying a specific version and very helpful in the case of maintenance, repair, interchanging IEDs between different Substation Automation Systems and upgrading. The factory made settings can not be changed by the customer. They can only be viewed. The settings are found in the local HMI under **Main menu/Diagnostics/IED status/Product identifiers**

The following identifiers are available:

- IEDProdType
  - Describes the type of the IED (like REL, REC or RET). Example: *REL670*
- FirmwareVer
  - Describes the firmware version. Example: *1.4.51*
  - Firmware versions numbers are “running” independently from the release production numbers. For every release numbers (like *1.5.0.17*) there can be one or more firmware versions, depending on the small issues corrected in between releases.
- IEDMainFunType
  - Main function type code according to IEC 60870-5-103. Example: 128 (meaning line protection).
- SerialNo
- OrderingNo
- ProductionDate

3.4.8 Rated system frequency PRIMVAL

3.4.8.1 Application

The rated system frequency is set under **Main menu/General settings/ Power system/ Primary Values** in the local HMI and PCM600 parameter setting tree.

3.4.8.2 Setting guidelines

Set the system rated frequency. Refer to section "Signal matrix for analog inputs SMAI" for description on frequency tracking.

3.4.8.3 Setting parameters

Table 21: PRIMVAL Non group settings (basic)

Name	Values (Range)	Unit	Step	Default	Description
Frequency	50.0 - 60.0	Hz	10.0	50.0	Rated system frequency

3.4.9 Signal matrix for binary inputs SMBI

3.4.9.1 Application

The Signal matrix for binary inputs function SMBI is used within the Application Configuration tool in direct relation with the Signal Matrix tool. SMBI represents the way binary inputs are brought in for one IED configuration.

3.4.9.2 Setting guidelines

There are no setting parameters for the Signal matrix for binary inputs SMBI available to the user in Parameter Setting tool. However, the user shall give a name to SMBI instance and the SMBI inputs, directly in the Application Configuration tool. These names will define SMBI function in the Signal Matrix tool. The user defined name for the input or output signal will also appear on the respective output or input signal.

3.4.9.3 Setting parameters

The function does not have any parameters available in local HMI or PCM600.

3.4.10 Signal matrix for binary outputs SMBO

3.4.10.1 Application

The Signal matrix for binary outputs function SMBO is used within the Application Configuration tool in direct relation with the Signal Matrix tool. SMBO represents the way binary outputs are sent from one IED configuration.

It is important that SMBO inputs are connected when SMBOs are connected to physical outputs through the Signal Matrix Tool. If SMBOs are connected (in SMT) but their inputs not, all the physical outputs will be set by default. This might cause malfunction of primary equipment and/or injury to personnel.

3.4.10.2 Setting guidelines

There are no setting parameters for the Signal matrix for binary outputs SMBO available to the user in Parameter Setting tool. However, the user must give a name to SMBO instance and SMBO outputs, directly in the Application Configuration tool. These names will define SMBO function in the Signal Matrix tool.

3.4.10.3 Setting parameters

The function does not have any parameters available in local HMI or PCM600.

3.4.11 Signal matrix for mA inputs SMMI

3.4.11.1 Application

The Signal matrix for mA inputs function SMMI is used within the Application Configuration tool in direct relation with the Signal Matrix tool. SMMI represents the way milliamp (mA) inputs are brought in for one IED configuration.

3.4.11.2 Setting guidelines

There are no setting parameters for the Signal matrix for mA inputs SMMI available to the user in the Parameter Setting tool. However, the user must give a name to SMMI instance and SMMI inputs, directly in the Application Configuration tool.

3.4.11.3 Setting parameters

The function does not have any parameters available in the local HMI or PCM600.

3.4.12 Signal matrix for analog inputs SMAI

3.4.12.1 Application

Signal matrix for analog inputs function (SMAI), also known as the preprocessor function, processes the analog signals connected to it and gives information about all aspects of the analog signals connected, like the RMS value, phase angle, frequency, harmonic content, sequence components and so on. This information is then used by the respective functions in ACT (for example protection, measurement or monitoring).

The SMAI function is used within PCM600 in direct relation with the Signal Matrix tool or the Application Configuration tool.

3.4.12.2 Frequency values

The frequency functions includes a functionality based on level of positive sequence voltage, *IntBlockLevel*, to validate if the frequency measurement is valid or not. If positive sequence voltage is lower than *IntBlockLevel* the function is blocked. *IntBlockLevel*, is set in % of *VBase*/√3

If SMAI setting *ConnectionType* is *Ph-Ph* at least two of the inputs GRPx_A, GRPx_B and GRPx_C must be connected in order to calculate positive sequence voltage. If SMAI setting *ConnectionType* is *Ph-N*, all three inputs GRPx_A, GRPx_B and GRPx_C must be connected in order to calculate positive sequence voltage.

If only one phase-phase voltage is available and SMAI setting *ConnectionType* is *Ph-Ph* the user is advised to connect two (not three) of the inputs GRPx_A, GRPx_B and GRPx_C to the same voltage input as shown in figure 22 to make SMAI calculating a positive sequence voltage (that is input voltage/√3).

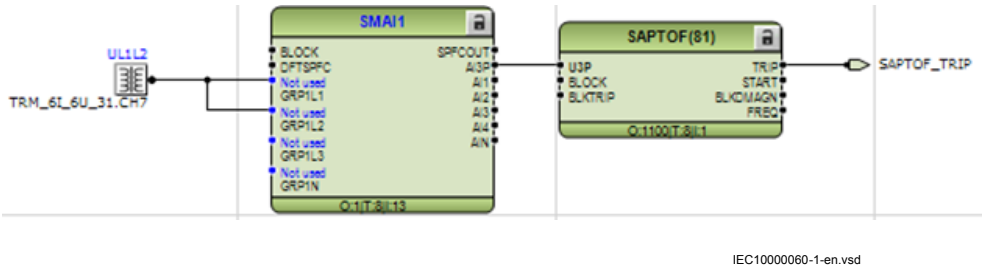

Figure 22: Connection example

The above described scenario does not work if SMAI setting *ConnectionType* is *Ph-N*. If only one phase-ground voltage is available, the same type of connection can be used but the SMAI *ConnectionType*

setting must still be *Ph-Ph* and this has to be accounted for when setting *IntBlockLevel*. If SMAI setting *ConnectionType* is *Ph-N* and the same voltage is connected to all three SMAI inputs, the positive sequence voltage will be zero and the frequency functions will not work properly.

The outputs from the above configured SMAI block shall only be used for Overfrequency protection (SAPTOF, 81), Underfrequency protection (SAPTUF, 81) and Rate-of-change frequency protection (SAPFRC, 81) due to that all other information except frequency and positive sequence voltage might be wrongly calculated.

3.4.12.3 Setting guidelines

The parameters for the signal matrix for analog inputs (SMAI) functions are set via the local HMI or PCM600.

Every SMAI function block can receive four analog signals (three phases and one neutral value), either voltage or current. SMAI outputs give information about every aspect of the 3ph analog signals acquired (phase angle, RMS value, frequency and frequency derivates, and so on – 244 values in total). Besides the block “group name”, the analog inputs type (voltage or current) and the analog input names that can be set directly in ACT.

Instantaneous protection function with a 3 ms cycle time, needs to be connected to the processing SMAI function block, which is also running at 3 ms task cycle. In addition, logic function blocks used with these fast cycle protection functions need to have 3 ms task cycle. Same procedure needs to be followed for each cycle time.

DFTRefExtOut: Parameter valid only for function block SMAI1 .

Reference block for external output (SPFCOUT function output).

DFTReference: Reference DFT for the block.

These DFT reference block settings decide DFT reference for DFT calculations. The settings *InternalDFTRef* will use fixed DFT reference based on set system frequency. *AdDFTRefChn* will use DFT reference from the selected group block, when own group selected adaptive DFT reference will be used based on calculated signal frequency from own group. The setting *ExternalDFTRef* will use reference based on what is connected to input DFTSPFC.

ConnectionType: Connection type for that specific instance (n) of the SMAI (if it is *Ph-N* or *Ph-Ph*). Depending on connection type setting the not connected *Ph-N* or *Ph-Ph* outputs will be calculated.

Negation: If the user wants to negate the 3ph signal, it is possible to choose to negate only the phase signals *Negate3Ph*, only the neutral signal *NegateN* or both *Negate3Ph +N*. negation means rotation with 180° of the vectors.

VBase: Base voltage setting (for each instance x).

MinValFreqMeas: The minimum value of the voltage for which the frequency is calculated, expressed as percent of VBase (for each instance n).

Settings *DFTRefExtOut* and *DFTReference* shall be set to default value *InternalDFTRef* if no VT inputs are available.

Even if the user sets the *AnalogInputType* of a SMAI block to "*Current*", the *MinValFreqMeas* is still visible. However, using the current channel values as base for frequency measurement is **not recommendable** for a number of reasons, not last among them being the low level of currents that one can have in normal operating conditions.

Examples of adaptive frequency tracking

Task time group 1	
SMAI instance	**3 phase group**
SMAI1:1	1
SMAI2:2	2
SMAI3:3	3
SMAI4:4	4
SMAI5:5	5
SMAI6:6	6
SMAI7:7	7
SMAI8:8	8
SMAI9:9	9
SMAI10:10	10
SMAI11:11	11
SMAI12:12	12

AdDFTRefCh7

Task time group 2	
SMAI instance	**3 phase group**
SMAI1:13	1
SMAI2:14	2
SMAI3:15	3
SMAI4:16	4
SMAI5:17	5
SMAI6:18	6
SMAI7:19	7
SMAI8:20	8
SMAI9:21	9
SMAI10:22	10
SMAI11:23	11
SMAI12:24	12

AdDFTRefCh4

Task time group 3	
SMAI instance	**3 phase group**
SMAI1:25	1
SMAI2:26	2
SMAI3:27	3
SMAI4:28	4
SMAI5:29	5
SMAI6:30	6
SMAI7:31	7
SMAI8:32	8
SMAI9:33	9
SMAI10:34	10
SMAI11:35	11
SMAI12:36	12

IEC07000197.vsd

Figure 23: Twelve SMAI instances are grouped within one task time. SMAI blocks are available in three different task times in the IED. Two pointed instances are used in the following examples.

The examples shows a situation with adaptive frequency tracking with one reference selected for all instances. In practice each instance can be adapted to the needs of the actual application.

Example 1

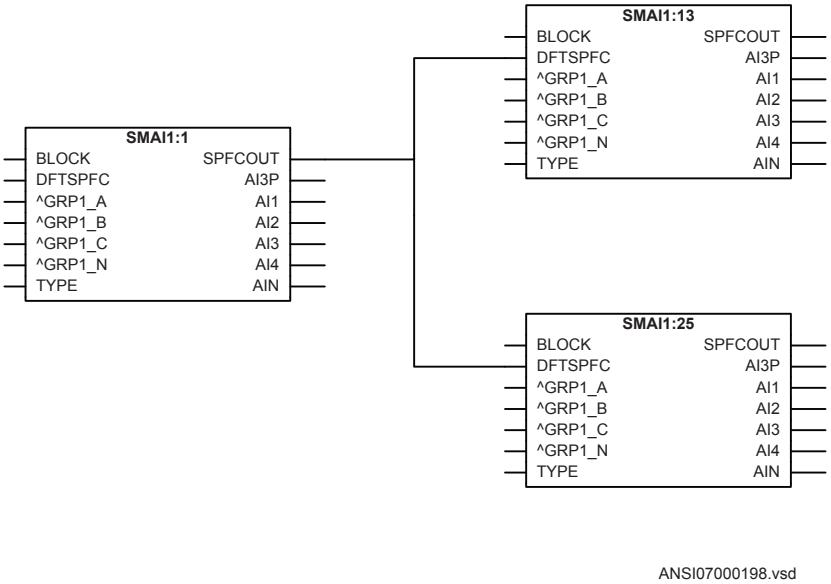

Figure 24: Configuration for using an instance in task time group 1 as DFT reference

Assume instance SMAI7:7 in task time group 1 has been selected in the configuration to control the frequency tracking . Observe that the selected reference instance (i.e. frequency tracking master) must be a voltage type. Observe that positive sequence voltage is used for the frequency tracking feature.

For task time group 1 this gives the following settings (see Figure 23 for numbering):

SMAI1:1: *DFTRefExtOut = AdDFTRefCh7* to route SMAI7:7 reference to the SPFCOUT output, *DFTReference = AdDFTRefCh7* for SMAI1:1 to use SMAI7:7 as reference (see Figure 24) SMAI2:2 – SMAI12:12: *DFTReference = AdDFTRefCh7* for SMAI2:2 – SMAI12:12 to use SMAI7:7 as reference.

For task time group 2 this gives the following settings:

SMAI1:13 – SMAI12:24: *DFTReference = ExternalDFTRef* to use DFTSPFC input as reference (SMAI7:7)

For task time group 3 this gives the following settings:

SMAI1:25 – SMAI12:36: *DFTReference = ExternalDFTRef* to use DFTSPFC input as reference (SMAI7:7)

Example 2

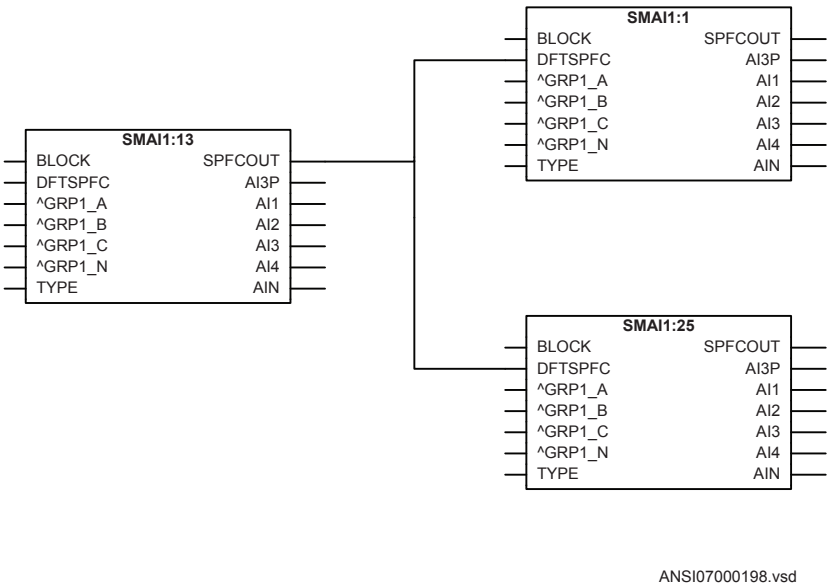

Figure 25: Configuration for using an instance in task time group 2 as DFT reference.

Assume instance SMAI4:16 in task time group 2 has been selected in the configuration to control the frequency tracking for all instances. Observe that the selected reference instance (i.e. frequency tracking master) must be a voltage type. Observe that positive sequence voltage is used for the frequency tracking feature.

For task time group 1 this gives the following settings (see Figure 23 for numbering):

SMAI1:1 – SMAI12:12: *DFTReference* = *ExternalDFTRef* to use DFTSPFC input as reference (SMAI4:16)

For task time group 2 this gives the following settings:

SMAI1:13: *DFTRefExtOut* = *AdDFTRefCh4* to route SMAI4:16 reference to the SPFCOUT output, *DFTReference* = *AdDFTRefCh4* for SMAI1:13 to use SMAI4:16 as reference (see Figure 25) SMAI2:14 – SMAI12:24: *DFTReference* = *AdDFTRefCh4* to use SMAI4:16 as reference.

For task time group 3 this gives the following settings:

SMAI1:25 – SMAI12:36: *DFTReference* = *ExternalDFTRef* to use DFTSPFC input as reference (SMAI4:16)

3.4.12.4 Setting parameters

Table 22: SMAI1 Non group settings (basic)

Name	Values (Range)	Unit	Step	Default	Description
DFTRefExtOut	InternalDFTRef AdDFTRefCh1 AdDFTRefCh2 AdDFTRefCh3 AdDFTRefCh4 AdDFTRefCh5 AdDFTRefCh6 AdDFTRefCh7 AdDFTRefCh8 AdDFTRefCh9 AdDFTRefCh10 AdDFTRefCh11 AdDFTRefCh12 External DFT ref	-	-	InternalDFTRef	DFT reference for external output
DFTReference	InternalDFTRef AdDFTRefCh1 AdDFTRefCh2 AdDFTRefCh3 AdDFTRefCh4 AdDFTRefCh5 AdDFTRefCh6 AdDFTRefCh7 AdDFTRefCh8 AdDFTRefCh9 AdDFTRefCh10 AdDFTRefCh11 AdDFTRefCh12 External DFT ref	-	-	InternalDFTRef	DFT reference
ConnectionType	Ph-N Ph-Ph	-	-	Ph-N	Input connection type
TYPE	1 - 2	Ch	1	1	1=Voltage, 2=Current

Table 23: SMAI1 Non group settings (advanced)

Name	Values (Range)	Unit	Step	Default	Description
Negation	Disabled NegateN Negate3Ph Negate3Ph+N	-	-	Disabled	Negation
MinValFreqMeas	5 - 200	%	1	10	Limit for frequency calculation in % of VBase
VBase	0.05 - 2000.00	kV	0.05	400.00	Base voltage

Table 24: SMAI2 Non group settings (basic)

Name	Values (Range)	Unit	Step	Default	Description
DFTReference	InternalDFTRef AdDFTRefCh1 AdDFTRefCh2 AdDFTRefCh3 AdDFTRefCh4 AdDFTRefCh5 AdDFTRefCh6 AdDFTRefCh7 AdDFTRefCh8 AdDFTRefCh9 AdDFTRefCh10 AdDFTRefCh11 AdDFTRefCh12 External DFT ref	-	-	InternalDFTRef	DFT reference
ConnectionType	Ph-N Ph-Ph	-	-	Ph-N	Input connection type
TYPE	1 - 2	Ch	1	1	1=Voltage, 2=Current

Table 25: SMAI2 Non group settings (advanced)

Name	Values (Range)	Unit	Step	Default	Description
Negation	Disabled NegateN Negate3Ph Negate3Ph+N	-	-	Disabled	Negation
MinValFreqMeas	5 - 200	%	1	10	Limit for frequency calculation in % of VBase
VBase	0.05 - 2000.00	kV	0.05	400.00	Base voltage

3.4.13 Summation block 3 phase 3PHSUM

3.4.13.1 Application

The analog summation block 3PHSUM function block is used in order to get the sum of two sets of 3 phase analog signals (of the same type) for those IED functions that might need it.

3.4.13.2 Setting guidelines

The summation block receives the three-phase signals from SMAI blocks. The summation block has several settings.

SummationType: Summation type (*Group 1 + Group 2*, *Group 1 - Group 2*, *Group 2 - Group 1* or *–(Group 1 + Group 2)*).

DFTReference: The reference DFT block (*InternalDFT Ref*,*DFTRefGrp1* or *External DFT ref*) .

FreqMeasMinVal: The minimum value of the voltage for which the frequency is calculated, expressed as percent of *VBase*base voltage setting (for each instance x).

VBase: Base voltage setting.

3.4.13.3 Setting parameters

Table 26: 3PHSUM Non group settings (basic)

Name	Values (Range)	Unit	Step	Default	Description
SummationType	Group1+Group2 Group1-Group2 Group2-Group1 -(Group1+Group2)	-	-	Group1+Group2	Summation type
DFTReference	InternalDFTRef AdDFTRefCh1 External DFT ref	-	-	InternalDFTRef	DFT reference

Table 27: 3PHSUM Non group settings (advanced)

Name	Values (Range)	Unit	Step	Default	Description
FreqMeasMinVal	5 - 200	%	1	10	Magnitude limit for frequency calculation in % of Vbase
VBase	0.05 - 2000.00	kV	0.05	400.00	Base voltage

3.4.14 Authority status ATHSTAT

3.4.14.1 Application

Authority status (ATHSTAT) function is an indication function block, which informs about two events related to the IED and the user authorization:

- the fact that at least one user has tried to log on wrongly into the IED and it was blocked (the output USRBLKED)
- the fact that at least one user is logged on (the output LOGGEDON)

The two outputs of ATHSTAT function can be used in the configuration for different indication and alarming reasons, or can be sent to the station control for the same purpose.

3.4.14.2 Setting parameters

The function does not have any parameters available in the local HMI or PCM600.

3.4.15 Denial of service DOS

3.4.15.1 Application

The denial of service functions (DOSFRNT, DOSOEMAB and DOSOEMCD) are designed to limit the CPU load that can be produced by Ethernet network traffic on the IED. The communication facilities must not be allowed to compromise the primary functionality of the device. All inbound network traffic will be quota controlled so that too heavy network loads can be controlled. Heavy network load might for instance be the result of malfunctioning equipment connected to the network.

DOSFRNT, DOSOEMAB and DOSOEMCD measures the IED load from communication and, if necessary, limit it for not jeopardizing the IEDs control and protection functionality due to high CPU load. The function has the following outputs:

- LINKUP indicates the Ethernet link status
- WARNING indicates that communication (frame rate) is higher than normal
- ALARM indicates that the IED limits communication

3.4.15.2 Setting guidelines

The function does not have any parameters available in the local HMI or PCM600.

3.5 Differential protection

3.5.1 1Ph High impedance differential protection HZPDIF (87)

3.5.1.1 Identification

Function description	IEC 61850 identification	IEC 60617 identification	ANSI/IEEE C37.2 device number
1Ph High impedance differential protection	HZPDIF	*Id*	87

3.5.1.2 Application

The 1Ph High impedance differential protection function HZPDIF (87) can be used as:

- Autotransformer differential protection
- Restricted ground fault protection
- T-feeder protection
- Tertiary (or secondary busbar) protection
- Tertiary connected reactor protection
- Generator differential protection

The application will be dependent on the primary system arrangements and location of breakers, available independent cores on CTs and so on.

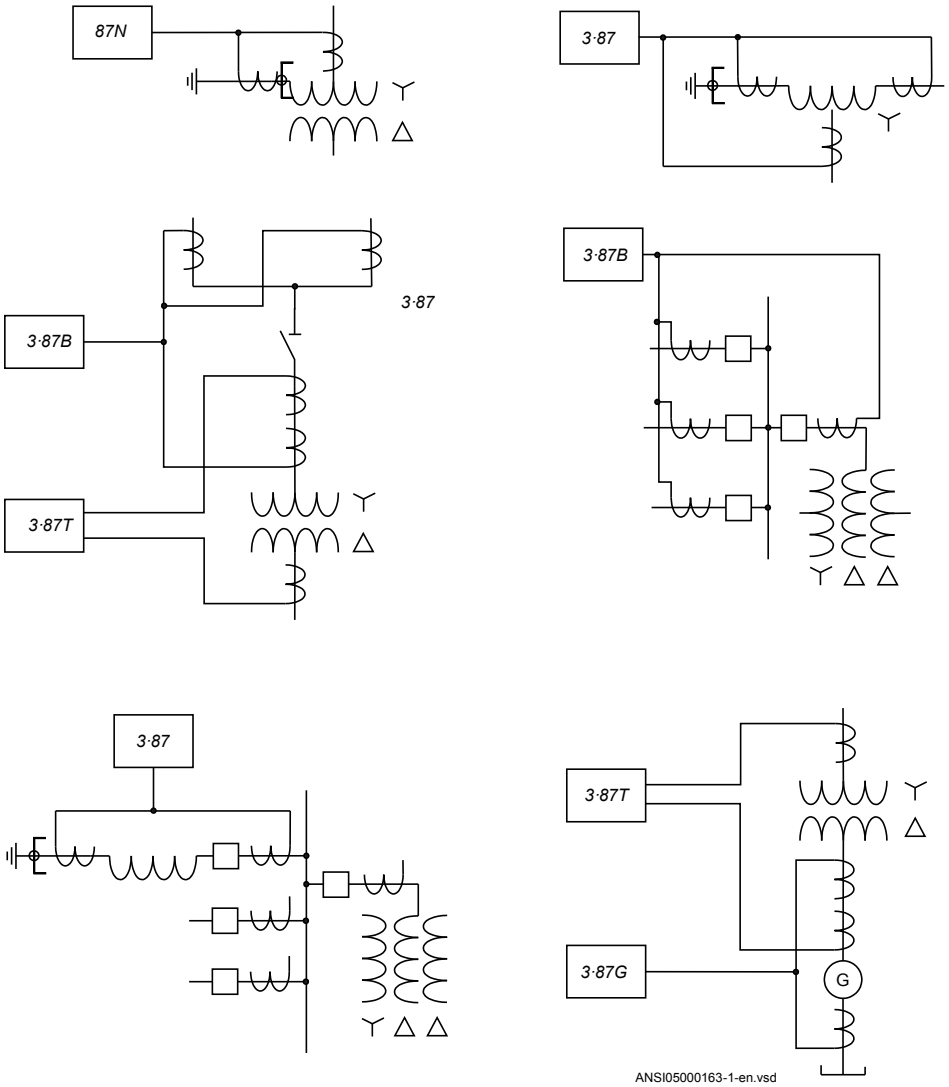

Figure 26: Different applications of a 1Ph High impedance differential protection HZPDIF (87) function

The basics of the high impedance principle

The high impedance differential protection principle has been used for many years and is well documented. The operating characteristic provides very good sensitivity and high speed operation. One main benefit offered by the principle is an absolute stability (that is, no operation) for external faults even in the presence of heavy CT saturation. The principle is based on the CT secondary current circulating between involved current transformers and not through the IED due to its high impedance, normally in the range of hundreds of ohms and sometimes above kiloohm. When an internal fault

occurs the current cannot circulate and is forced through the differential circuit causing operation.

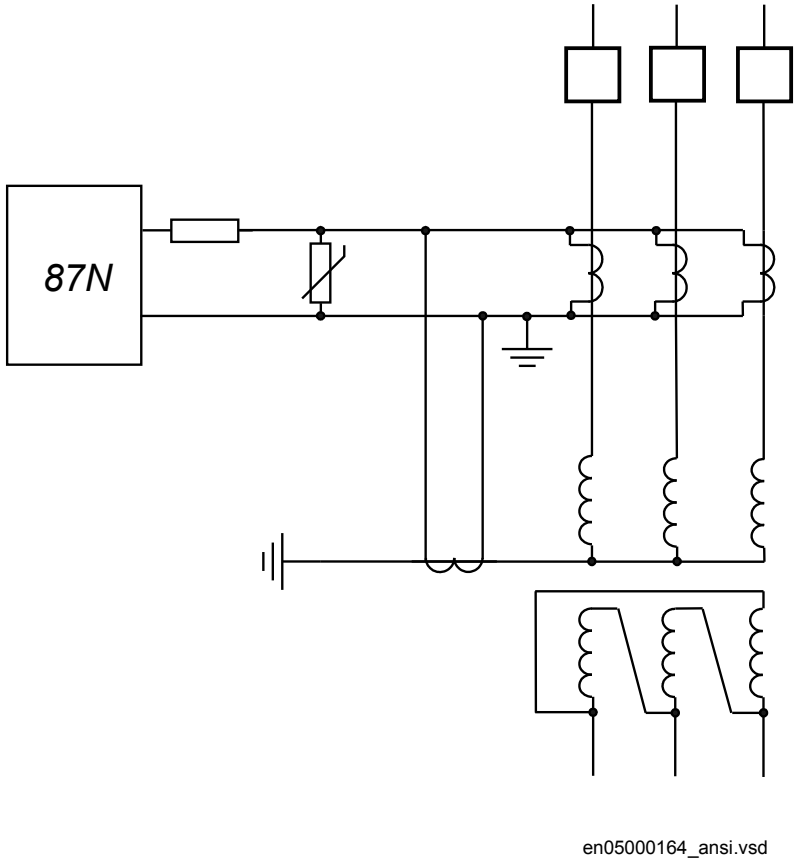

Figure 27: Example for the high impedance restricted earth fault protection application

For a through fault one current transformer might saturate when the other CTs still will feed current. For such a case a voltage will be developed across the stabilising resistor. The calculations are made with the worst situations in mind and a minimum operating voltage V_R is calculated according to equation 25

$$VR > IF\max \cdot \left(Rct + Rl \right)$$

(Equation 25)

where:

*IF*max	is the maximum through fault current at the secondary side of the CT
Rct	is the current transformer secondary resistance and
Rl	is the maximum loop resistance of the circuit at any CT.

The minimum operating voltage has to be calculated (all loops) and the IED function is set higher than the highest achieved value (setting *TripPickup*). As the loop resistance is the value to the connection point from each CT, it is advisable to do all the CT core summations in the switchgear to have shortest possible loops. This will give lower setting values and also a better balanced scheme. The connection in to the control room can then be from the most central bay.

For an internal fault, circulation is not possible, due to the high impedance. Depending on the size of current transformer, relatively high voltages will be developed across the series resistor. Note that very high peak voltages can appear. To prevent the risk of flashover in the circuit, a voltage limiter must be included. The voltage limiter is a voltage dependent resistor (Metrosil).

The external unit with stabilizing resistor has a value of either 6800 ohms or 1800 ohms (depending on ordered alternative) with a shorting link to allow adjustment to the required value. Select a suitable value of the resistor based on the VR voltage calculated. A higher resistance value will give a higher sensitivity and a lower value a lower sensitivity.

The function has a recommended operating current range 40 mA to 1.0A for 1 A inputs and 200 mA to 5A for 5A inputs. This, together with the selected and set value, is used to calculate the required value of current at the set *TripPickup* and *R series* values.

The CT inputs used for 1Ph High impedance differential protection HZPDIF (87) function, shall be set to have ratio 1:1. So the parameters CT_{secx} and CT_{primx} of the relevant channel x of TRM and/or AIM shall be set equal to 1 A by PST in PCM600; The parameter *CTStarPointx* may be set to *ToObject*.

The tables 28, 29 below show, the operating currents for different settings of operating voltages and selected resistances. Adjust as required based on tables 28, 29 or to values in between as required for the application.

Minimum ohms can be difficult to adjust due to the small value compared to the total value.

Normally the voltage can be increased to higher values than the calculated minimum *TripPickup* with a minor change of total operating values as long as this is done by adjusting the resistor to a higher value. Check the sensitivity calculation below for reference.

Table 28: 1 A channels: input with minimum operating down to 20 mA

Operating voltage *TripPickup*	Stabilizing resistor R ohms	Operating current level 1 A	Stabilizing resistor R ohms	Operating current level 1 A	Stabilizing resistor R ohms	Operating current level 1 A
20 V	1000	0.020 A	--	--	--	--
40 V	2000	0.020 A	1000	0.040 A	--	--
60 V	3000	0.020 A	1500	0.040 A	600	0.100 A
80 V	4000	0.020 A	2000	0.040 A	800	0.100 A
100 V	5000	0.020 A	2500	0.040 A	1000	0.100 A
150 V	6000	0.020 A	3750	0.040 A	1500	0.100 A
200 V	6800	0.029 A	5000	0.040 A	2000	0.100 A

Table 29: 5 A channels: input with minimum operating down to 100 mA

Operating voltage *TripPickup*	Stabilizing resistor R1 ohms	Operating current level 5 A	Stabilizing resistor R1 ohms	Operating current level 5 A	Stabilizing resistor R1 ohms	Operating current level 5 A
20 V	200	0.100 A	100	0.200 A	--	--
40 V	400	0.100 A	200	0.200 A	100	0.400
60 V	600	0.100 A	300	0.200 A	150	0.400 A
80 V	800	0.100 A	400	0.200 A	200	0.400 A
100 V	1000	0.100 A	500	0.200 A	250	0.400 A
150 V	1500	0.100 A	750	0.200 A	375	0.400 A
200 V	2000	0.100 A	1000	0.200 A	500	0.400 A

The current transformer saturating voltage must be at least 2 · *TripPickup* to have sufficient operating margin. This must be checked after calculation of *TripPickup*.

When the R value has been selected and the *TripPickup* value has been set, the sensitivity of the scheme *IP* can be calculated. The IED sensitivity is decided by the total current in the circuit according to equation 26.

$$IP = n \cdot (IR + Ires + \sum lmag)$$

(Equation 26)

where:

n is the CT ratio

IP primary current at IED pickup,

Table continues on next page

IR	IED pickup current
Ires	is the current through the voltage limiter and
ΣImag	is the sum of the magnetizing currents from all CTs in the circuit (for example, 4 for restricted earth fault protection, 2 for reactor differential protection, 3-5 for autotransformer differential protection).

It should be remembered that the vectorial sum of the currents must be used (IEDs, Metrosil and resistor currents are resistive). The current measurement is insensitive to DC component in fault current to allow the use of only the AC components of the fault current in the above calculations.

The voltage dependent resistor (Metrosil) characteristic is shown in figure 33.

Series resistor thermal capacity

The series resistor is dimensioned for 200 W. Care shall be exercised while testing to ensure that if current needs to be injected continuously or for a significant duration of time, check that the heat dissipation Vxxx Series Resistance value does not exceed 200 W. Otherwise injection time shall be reduced to the minimum.

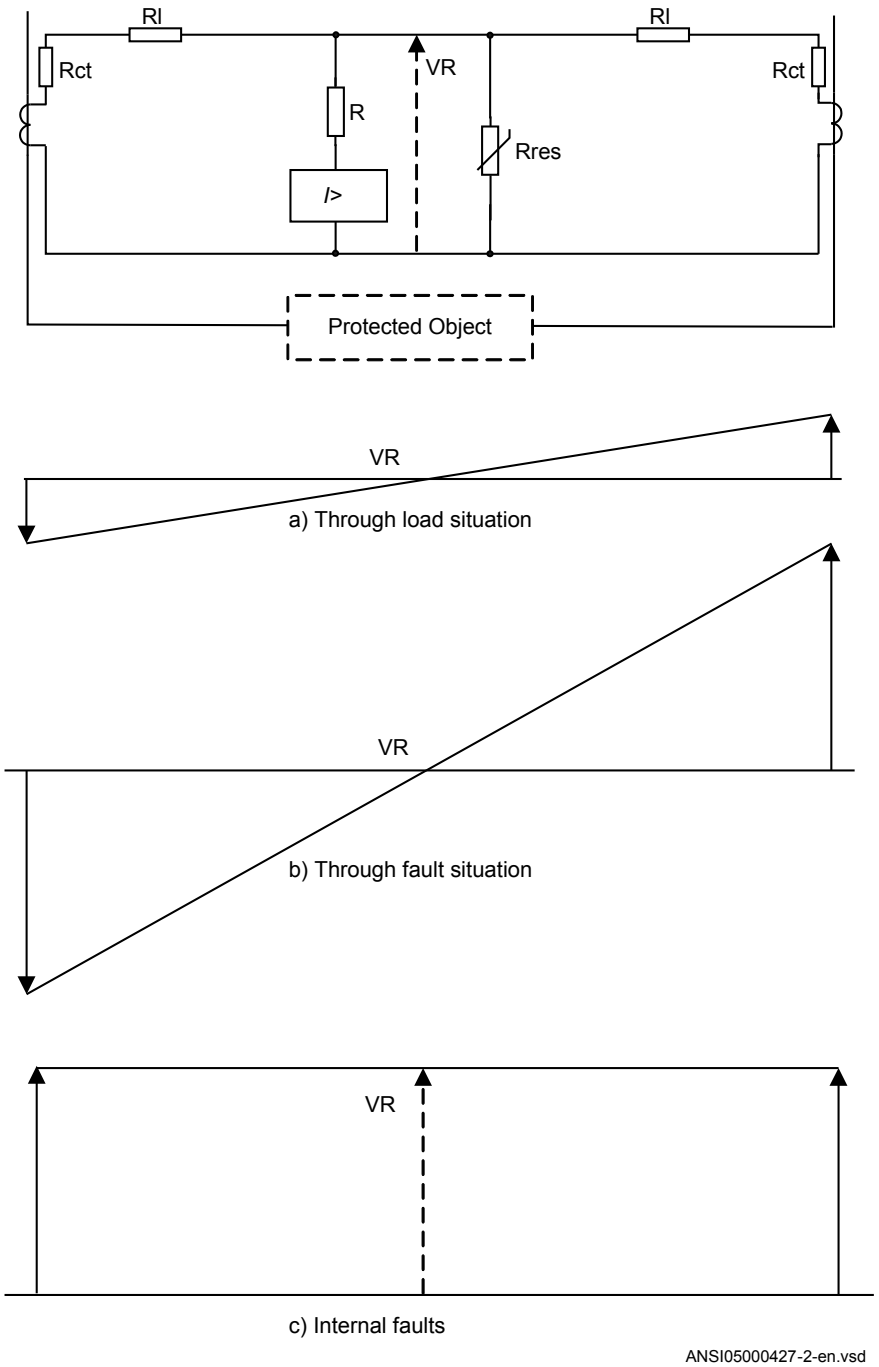

Figure 28: The high impedance principle for one phase with two current transformer inputs

3.5.1.3 Connection examples for high impedance differential protection

WARNING! USE EXTREME CAUTION! Dangerously high voltages might be present on this equipment, especially on the plate with resistors. Do any maintenance ONLY if the primary object protected with this equipment is de-energized. If required by national law or standard, enclose the plate with resistors with a protective cover or in a separate box.

Connections for three-phase high impedance differential protection

Generator, reactor or busbar differential protection is a typical application for three-phase high impedance differential protection. Typical CT connections for three-phase high impedance differential protection scheme are shown in figure 29.

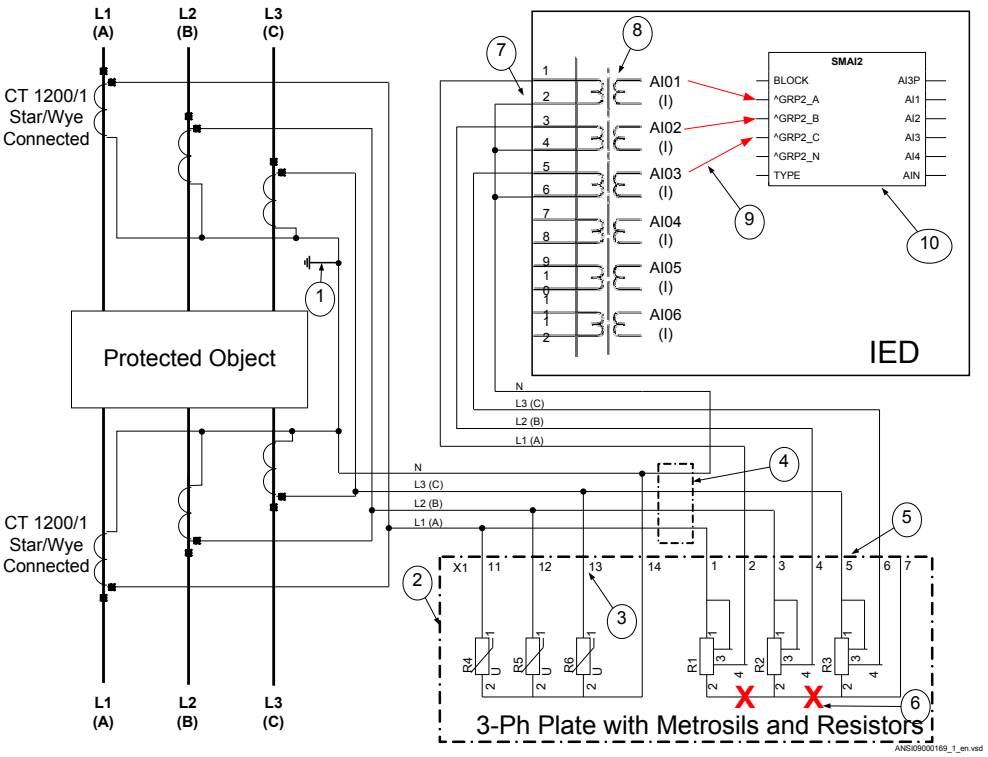

Figure 29: CT connections for high impedance differential protection

Pos	Description
1	Scheme grounding point

Note that it is of outmost importance to insure that only one grounding point exist in such scheme.

2	Three-phase plate with setting resistors and metrosils.
3	Necessary connection for three-phase metrosil set. Shown connections are applicable for both types of three-phase plate.
4	Position of optional test switch for secondary injection into the high impedance differential IED.
5	Necessary connection for setting resistors. Shown connections are applicable for both types of three-phase plate.
6	The factory made star point on a three-phase setting resistor set.

Shall be removed for installations with 650 and 670 series IEDs. This star point is required for RADHA schemes only.

7	How to connect three individual phase currents for high impedance scheme to three CT inputs in the IED.
8	Transformer input module, where the current inputs are located.

Note that the CT ratio for high impedance differential protection application must be set as one.

- For main CTs with 1A secondary rating the following setting values shall be entered: *CTprim* = *1A* and *CTsec* = *1A*
- For main CTs with 5A secondary rating the following setting values shall be entered: *CTprim* = *5A* and *CTsec* = *5A*
- The parameter *CTStarPoint* shall be always left to the default value *ToObject*.

9	Three connections made in the Signal Matrix, which connect these three current inputs to the first three input channels of the preprocessing function block (10). For high impedance differential protection preprocessing function block in 3ms task shall be used.
10	Preprocessing block, to digitally filter the connected analogue inputs. Preprocessing block outputs AI1, AI2 and AI3 shall be connected to three instances of 1Ph high impedance differential protection HZPDIF (87) function blocks, for example instance 1, 2 and 3 of HZPDIF (87) in the configuration tool.

Connections for 1Ph High impedance differential protection HZPDIF (87)

Restricted earth fault protection REFPDIF (87N) is a typical application for 1Ph High impedance differential protection HZPDIF (87). Typical CT connections for high impedance based REFPDIF (87N) protection scheme are shown in figure 30.

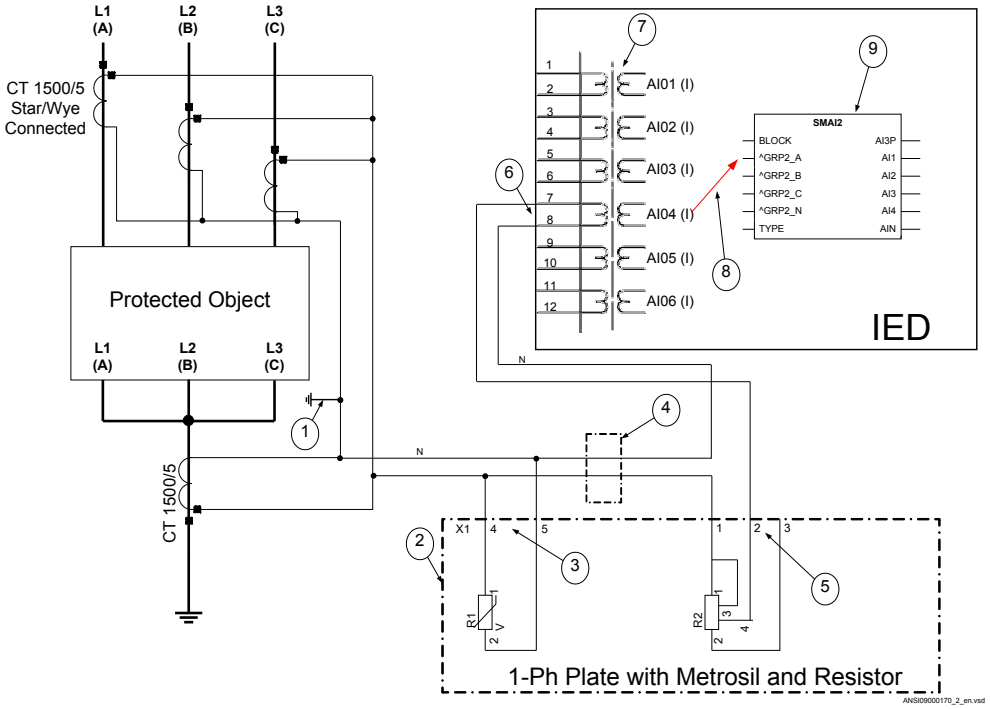

Figure 30: CT connections for restricted earth fault protection

Pos	Description
1	Scheme grounding point

Note that it is of outmost importance to insure that only one grounding point exist in such scheme.

2	One-phase plate with stabilizing resistor and metrosil.
3	Necessary connection for the metrosil. Shown connections are applicable for both types of one-phase plate.
4	Position of optional test switch for secondary injection into the high impedance differential IED.
5	Necessary connection for stabilizing resistor. Shown connections are applicable for both types of one-phase plate.
6	How to connect REFPDIF (87N) high impedance scheme to one CT input in IED.

7 Transformer input module where this current input is located.

Note that the CT ratio for high impedance differential protection application must be set as one.

- For main CTs with 1A secondary rating the following setting values shall be entered: *CTprim* = *1A* and *CTsec* = *1A*
- For main CTs with 5A secondary rating the following setting values shall be entered: *CTprim* = *5A* and *CTsec* = *5A*
- The parameter *CTStarPoint* shall always be left to the default value *ToObject*

8 Connection made in the Signal Matrix, which connects this current input to first input channel of the preprocessing function block (9). For high impedance differential protection preprocessing function block in 3ms task shall be used.

9 Preprocessing block, which has a task to digitally filter the connected analogue inputs. Preprocessing block output AI1 shall be connected to one instances of 1Ph high impedance differential protection function HZPDIF (87) (for example, instance 1 of HZPDIF (87) in the configuration tool).

3.5.1.4 Setting guidelines

The setting calculations are individual for each application. Refer to the different application descriptions below.

Configuration

The configuration is done in the Application Configuration tool. Signals from for example, check if criteria are connected to the inputs as required for the application.

BLOCK input is used to block the function for example, from external check criteria.

BLKTR input is used to block the function tripping for example, from external check criteria. The alarm level will be operative.

Settings of protection function

Operation: The operation of the high impedance differential function can be switched *Enabled* or *Disabled*.

AlarmPickup: Set the alarm level. The sensitivity can roughly be calculated as a divider from the calculated sensitivity of the differential level. A typical setting is 10% of *TripPickup*. It can be used as scheme supervision stage.

tAlarm: Set the time for the alarm. A typical setting is 2-3 seconds.

TripPickup: Set the trip level according to the calculations in the examples for each application example. The level is selected with margin to the calculated required voltage to achieve stability. Values can be 20-200 V dependent on the application.

R series: Set the value of the stabilizing series resistor. Calculate the value according to the examples for each application. Adjust the resistor as close as possible to the calculated example. Measure the value achieved and set this value here.

The value shall always be high impedance. This means for example, for 1A circuits say bigger than 400 ohms (400 VA) and for 5 A circuits say bigger than 100 ohms (2500 VA). This ensures that the current will circulate and not go through the differential circuit at through faults.

T-feeder protection

In many busbar arrangements such as breaker-and-a-half, ring breaker, mesh corner, there will be a T-feeder from the current transformer at the breakers up to the current transformers in the transformer bushings. It is often required to separate the zones so the zone up to the bushing is covered from one differential function and the transformer from another. The 1Ph high impedance differential HZPDIF (87) function in the IED allows this to be done efficiently, see figure 31.

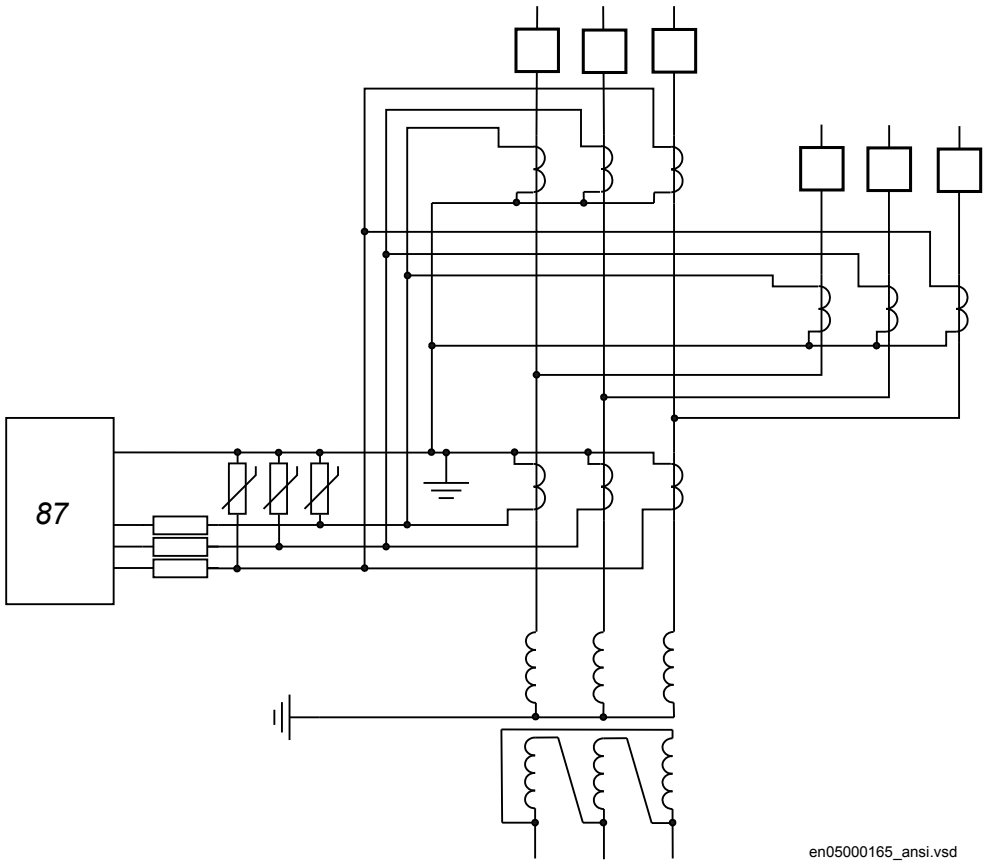

Figure 31: The protection scheme utilizing the high impedance function for the T-feeder

Normally this scheme is set to achieve a sensitivity of around 20 percent of the rated current so that a low value can be used on the resistor.

It is strongly recommended to use the highest tap of the CT whenever high impedance protection is used. This helps in utilizing maximum CT capability, minimize the current, thereby reducing the stability voltage limit. Another factor is that during internal faults, the voltage developed across the selected tap is limited by the non-linear resistor but in the unused taps, owing to auto-transformer action, voltages may be much higher than design limits might be induced.

Setting example

Basic data:	
Current transformer ratio:	2000/5A
CT Class:	C800 (At max tap of 2000/5A)
Secondary resistance:	0.5 Ohm (2000/5A tap)
Cable loop resistance:	[2]<200 ft AWG10 (one way between the junction point and the farthest CT) to be limited to approx. 0.2 Ohms at 75deg C gives loop resistance 2 · 0.2 = 0.4 Ohms.
Max fault current:	Equal to switchgear rated fault current 40 kA

Calculation:

$$VR > \frac{40000}{400} \cdot (0.5 + 0.4) = 90V$$

(Equation 27)

Select a setting of *TripPickup*=100 V.

The current transformer saturation voltage must be at least, twice the set operating voltage *TripPickup*.

$$VkneeANSI > (0.5 + 8) \cdot 100 * 0.7 = 595V$$

(Equation 28)

that is, bigger than 2 · *TripPickup*

Check from the table of selected resistances the required series stabilizing resistor value to use. As this application requires to be so sensitive select *R Series*= 500 ohm, which gives an IED operating current of 200 mA.

Calculate the primary sensitivity at operating voltage, ignoring the current drawn by the non-linear resistor.

$$IP = \frac{2000}{5}\left(200\underline{|0°} + 3 \cdot 50\underline{|-60°}\right) \cdot 10^{-3} \leq approx.100A$$

(Equation 29)

where

200mA is the current drawn by the IED circuit and

50mA is the current drawn by each CT just at pickup

The magnetizing current is taken from the magnetizing curve for the current transformer cores which should be available. The value at *TripPickup* is taken.

It can clearly be seen that the sensitivity is not so much influenced by the selected voltage level so a sufficient margin should be used. The selection of the stabilizing resistor and the level of the magnetizing current (mostly dependent of the number of turns) are the most important factors.

Tertiary reactor protection

For many transformers there can be a secondary system for local distribution and/or shunt compensation. The 1Ph High impedance differential protection function HZPDIF (87) can be used to protect the tertiary reactor for phase as well as ground faults if the grounding is direct or low impedance.

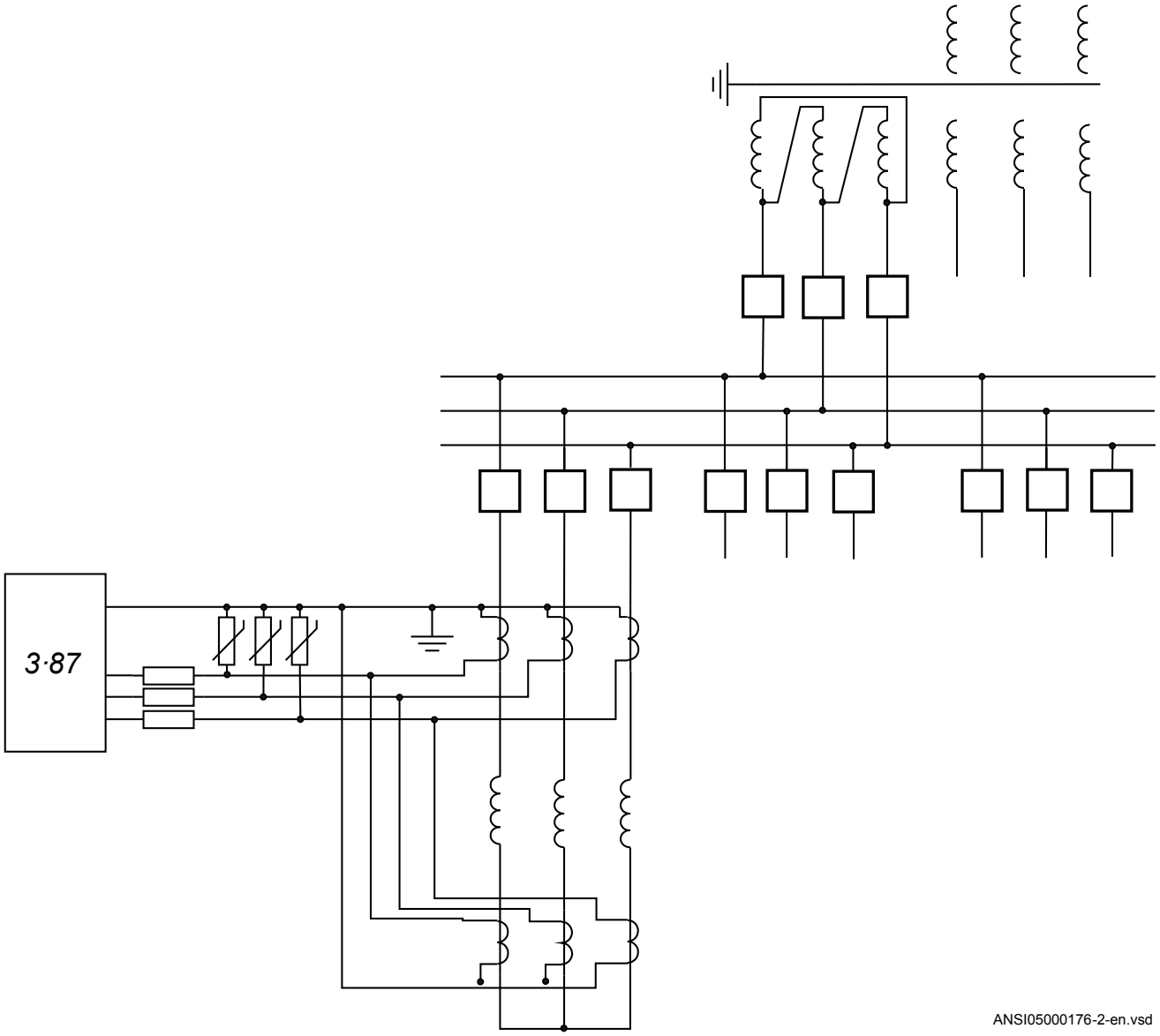

Figure 32: Application of the1Ph High impedance differential protection HZPDIF (87) function on an autotransformer

Setting example

It is strongly recommended to use the highest tap of the CT whenever high impedance protection is used. This helps in utilizing maximum CT capability, minimize the current, thereby reducing the stability voltage limit. Another factor is that during internal faults, the voltage developed across the selected tap is limited by the non-linear resistor but in the

unused taps, owing to auto-transformer action, voltages much higher than design limits might be induced.

Basic data:	
Current transformer ratio:	100/5 A (Note: Must be the same at all locations)
CT Class:	C200
Secondary resistance:	0.1 Ohms (At 100/5 Tap)
Cable loop resistance:	<100 ft AWG10 (one way between the junction point and the farthest CT) to be limited to approximately 0.1 Ohms at 75deg C Note! Only one way as the system grounding is limiting the ground-fault current. If high ground-fault current exists use two way cable.
Max fault current:	The maximum through fault current is limited by the reactor reactance and the inrush will be the worst for a reactor for example, 800 A.

Calculation:

$$VR > \frac{800}{20} \cdot (0.1 + 0.1) = 8$$

(Equation 30)

Select a setting of *TripPickup*=20 V.

The current transformer knee point voltage can roughly be calculated from the rated values. Considering knee point voltage to be about 70% of the accuracy limit voltage.

$$VkneeANSI > \left(2 + 0.1\right) \cdot 100 \cdot 0.7 = 147 \text{ V}$$

(Equation 31)

that is, greater than 2 · *TripPickup*.

Check from the table of selected resistances the required series stabilizing resistor value to use. Since this application requires good sensitivity, select *R Series* = 100 ohm, which gives an IED current of 200 mA.

To calculate the sensitivity at operating voltage, refer to equation 32, which gives an acceptable value, ignoring the current drawn by the non-linear resistor. A little lower sensitivity could be selected by using a lower resistance value.

$$IP = \frac{100}{5} \cdot (200 + 2 \cdot 30) \leq approx.5.2A$$

(Equation 32)

Where 200mA is the current drawn by the IED circuit and 50mA is the current drawn by each CT just at pickup. The magnetizing current is taken from the magnetizing curve of the current transformer cores, which should be available. The value at *TripPickup* is taken.

Alarm level operation

The 1Ph High impedance differential protection HZPDIF (87) function has a separate alarm level, which can be used to give alarm for problems with an involved current transformer circuit. The setting level is normally selected to be around 10% of the operating voltage *TripPickup*.

As seen in the setting examples above the sensitivity of HZPDIF (87) function is normally high, which means that the function will in many cases operate also for short circuits or open current transformer secondary circuits. However the stabilizing resistor can be selected to achieve sensitivity higher than normal load current and/or separate criteria can be added to the operation, a check zone. This can be either another IED, with the same HZPDIF (87) function, or be a check about the fault condition, which is performed by a ground overcurrent function or neutral point voltage function.

For such cases where operation is not expected during normal service the alarm output should be used to activate an external shorting of the differential circuit avoiding continuous high voltage in the circuit. A time delay of a few seconds is used before the shorting and alarm are activated. Auxiliary relays with contacts that can withstand high voltage shall be used, like RXMVB types. Use auxiliary relays with contacts that can withstand high voltages for example, RXMVB types.

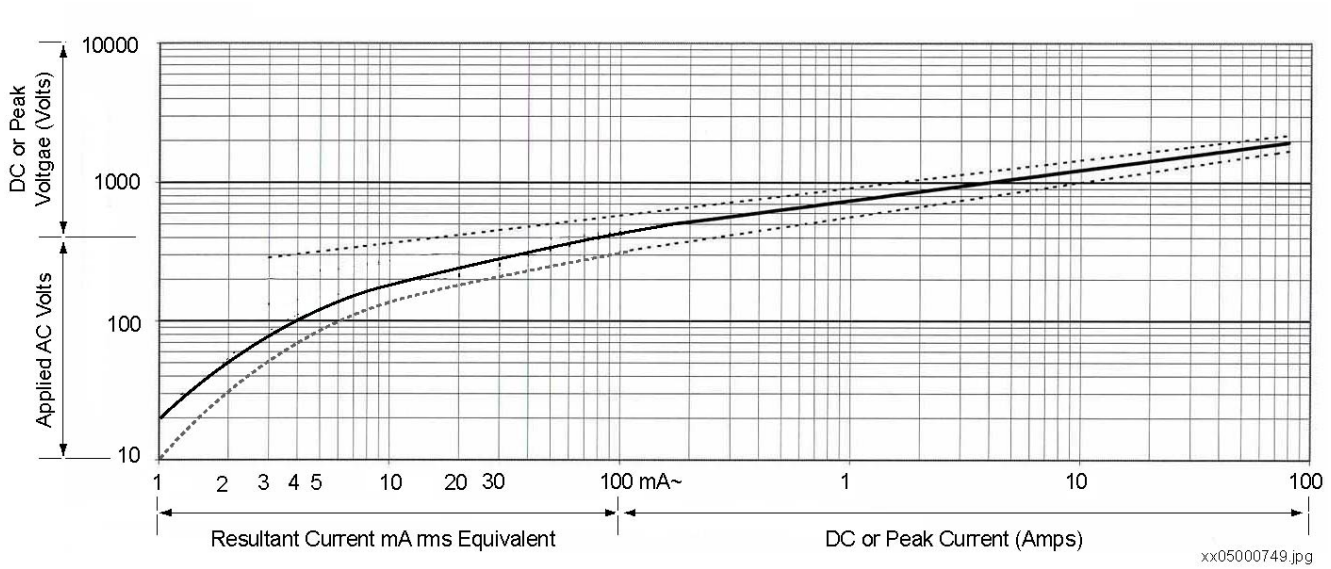

Figure 33: Current voltage characteristics for the non-linear resistors, in the range 10-200 V, the average range of current is: 0.01–10 mA

3.5.1.5 Setting parameters

Table 30: HZPDIF (87) Group settings (basic)

Name	Values (Range)	Unit	Step	Default	Description
Operation	Disabled Enabled	-	-	Disabled	Disable/Enable Operation
AlarmPickup	2 - 500	V	1	10	Alarm voltage level on CT secondary
tAlarm	0.000 - 60.000	s	0.001	5.000	Time delay to activate alarm
TripPickup	5 - 900	V	1	100	Pickup voltage level in volts on CT secondary side
R series	10 - 20000	ohm	1	250	Value of series resistor in Ohms

3.5.2 Line differential protection

Function description	IEC 61850 identification	IEC 60617 identification	ANSI/IEEE C37.2 device number
Line differential protection, 3 CT sets, 2-3 line ends	L3CPDIF	3Id/I>	87L
Line differential protection, 6 CT sets, 3-5 line ends	L6CPDIF	3Id/I>	87L
Line differential protection 3 CT sets, with in-zone transformers, 2-3 line ends	LT3CPDIF	3Id/I>	87LT
Line differential protection 6 CT sets, with in-zone transformers, 3-5 line ends	LT6CPDIF	3Id/I>	87LT
Line differential logic	LDLPDIF	-	87L

3.5.2.1 Application

Line differential protection can be applied on overhead lines and cables. It is an absolute selective unit protection with a number of advantages. Coordination with other protections is normally simple. All faults on the line, between the line bay CTs, can be cleared instantaneously. The sensitivity can be made high, which is especially important for the ability to detect high resistive ground faults. It is not influenced by possible voltage and/or current inversion, associated with faults in series compensated networks. It is not influenced by fault current reversal at ground faults on parallel lines. As it is phase-segregated, the identification of faulted phases is inherent, and thus the application of single- or two-pole trip and auto-reclosing can be made robust and reliable. Note that if an in-line or shunt power transformer is included in the protected circuit, of the type Dy or Yd, then the protection cannot be phase-segregated. Single-phase automatic re-closing will not be possible.

Line differential protection can be applied on multi-terminal lines with maximum five line ends. Depending on the actual network, reliable fault clearance can often be difficult to achieve with conventional distance protection schemes in these types of applications.

It is recommended to use the same firmware version as well as hardware version for a specific RED670 scheme.

With 1½ breaker configurations, normally the line protection is fed from two CTs. Avoiding to add the currents from the two CTs externally before entering the IED is important as this will enable possible bias current from both CTs to be considered in the current differential algorithm, and in that way assuring that the correct restrain will be possible, as shown in figure 34.

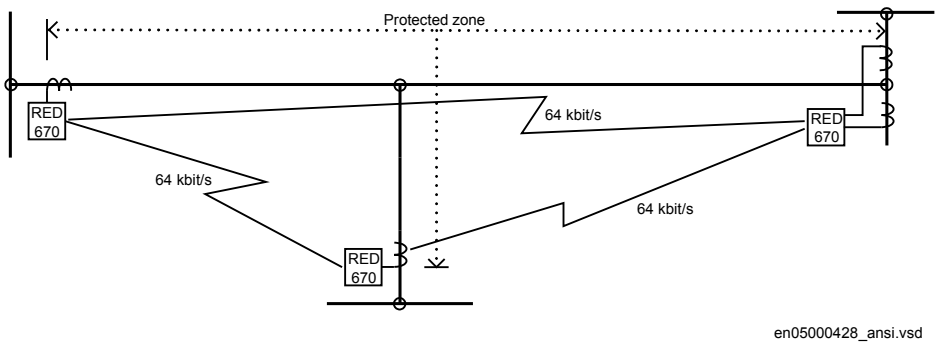

Figure 34: Line protection with breaker-and-a-half configurations, fed from two CTs

Power transformers in the protected zone

Line differential protection can also be applied on lines with power transformers in the protected zone. The transformer can be situated in tap, as shown in figure 35 or in one end of a two terminal line. Up to two two-winding transformers in the same or different line ends, or alternatively one three-winding transformer can be included.

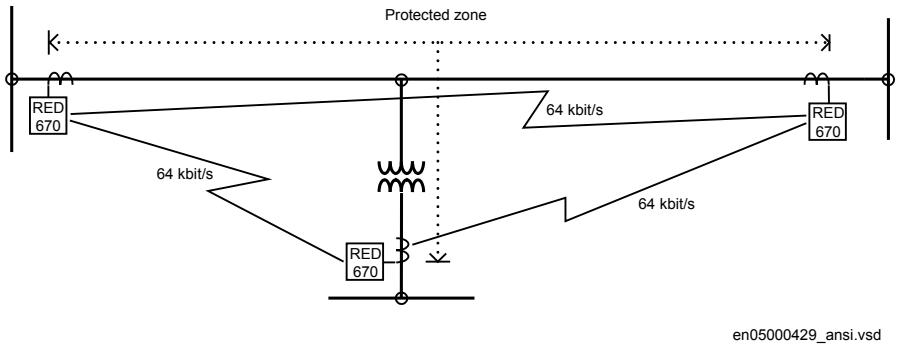

Figure 35: Transformer situated in tap

A current differential protection including power transformers, must be compensated for transformer turns ratio and phase shift/vector group. In RED670 this compensation is made in the software algorithm, which eliminates the need for auxiliary interposing current transformers. Necessary parameters, such as, transformer rated voltages and phase shift must be entered via the Parameter Setting tool or the local HMI.

Another special concern with differential protection on power transformers is that a differential protection may operate unwanted due to external ground faults in cases where the zero-sequence current can flow only on one side of the power transformer but not on the other side, as in the case of Yd or Dy phase shift/vector groups. This is the situation when the zero-sequence current cannot be transformed from one side to the other of the transformer. To make the differential protection insensitive to external ground faults in these situations, the zero-sequence current must be eliminated from the terminal currents so that it does not appear as a differential current. This was previously achieved by means of intermediate current transformers. The elimination of zero-sequence current is done numerically and no auxiliary transformers are necessary. Instead it is necessary to eliminate the zero sequence current by proper setting of the parameter *ZerSeqCurSubtr*.

Small power transformers in a tap

If there is a line tap with a comparatively small power transformer (say 1-20MVA) , line differential protection can be applied without the need of current measurement from the tap. It works such that line differential protection function will be time delayed for small differential currents below a set limit, making coordination with downstream short circuit protection in the tap possible. For differential currents above that limit, the operation will be instantaneous in the normal way. Under the condition that the load current in the tap will be negligible, normal line faults, with a fault current

higher than the fault current on the LV side of the transformer, will be cleared instantaneously.

For faults on the LV side of the transformer the function will be time delayed, with the delay characteristic selected, thus providing selectivity to the downstream functions, see figure 36. The scheme will solve the problem with back-up protection for faults on the transformer LV side where many expensive solutions have been applied such as intertripping or a local HV breaker. In many such applications the back-up protection has been lacking due to the complexity in cost implications to arrange it. Refer also to the setting example below.

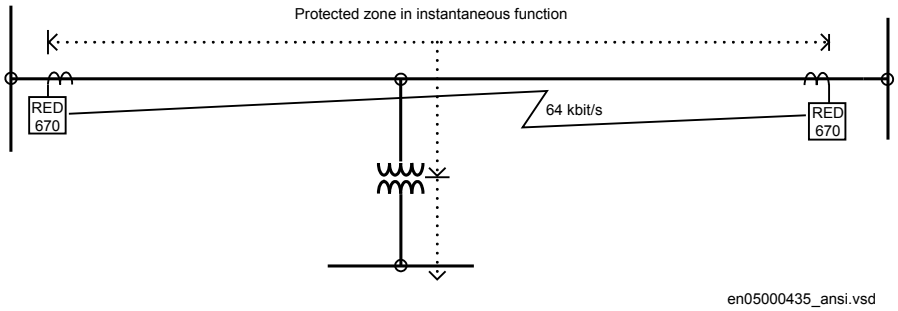

Figure 36: Line tap with a small power transformer, the currents of which are not measured, and consequently contribute to a (false) differential current

Charging current compensation

There are capacitances between the line phase conductors and between phase conductors and ground. These capacitances give rise to line charging currents which are seen by the differential protection as “false” differential currents, as shown in figure 37.

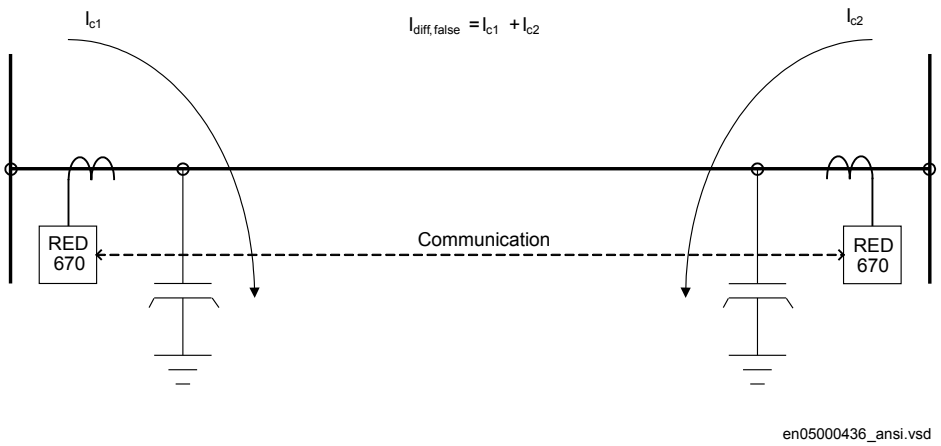

Figure 37: Charging currents

The magnitude of the charging current is dependent of the line capacitance and the system voltage. For underground cables and long over head lines, the magnitude can be such that it affects the possibility to achieve desired sensitivity of the differential protection. To overcome this, a charging current compensation is available in Line differential protection. When enabled, this compensation will measure the fundamental frequency differential current under steady state undisturbed conditions and then subtract it, making the resulting differential current zero (or close to zero). Note that all small pre-fault differential currents are subtracted, no matter what their origin. As the differential protection is phase segregated, this action is made separately for each phase.

When a disturbance occurs, values of the pre-fault differential currents are not updated, and the updating process is only resumed 50 ms after normal conditions have been restored. Normal conditions are then considered when there are no pickup signals, neither internal nor external fault is detected, the power system is symmetrical and so on. The consequence of freezing the pre-fault values during fault conditions in this way will actually introduced an error in the resulting calculated differential current under fault conditions. However, this will not have any practical negative consequences, whilst the positive effect of maintaining high sensitivity even with high charging currents will be achieved. To demonstrate this, two cases can be studied, one with a low resistive short circuit, and one with a high resistive short circuit.

The charging current is generated because there is a voltage applied over the line capacitance as seen in the figure above. If an external short circuit with negligible fault resistance occurs close to the line, the voltage in the fault location will be approximately zero. Consequently, zero voltage will also be applied over part of the line capacitance, which in turn will decrease the charging current compared to the pre-fault value. As has been mentioned above, the value of the pre-fault “false” differential current will be frozen when a fault is detected, and a consequence of this will then be that the value of the subtracted charging current will be too high in this case. However, as it is a low resistive fault, the bias current will be comparatively high whilst the charging current and any errors in the approximation of this, will be comparatively low. Thus, the over estimated charging current will not be of the order to jeopardize stability as can be realized from figure 38 showing the characteristic of Line differential protection. In this figure, the considered fault will appear in Section well in the restrain area.

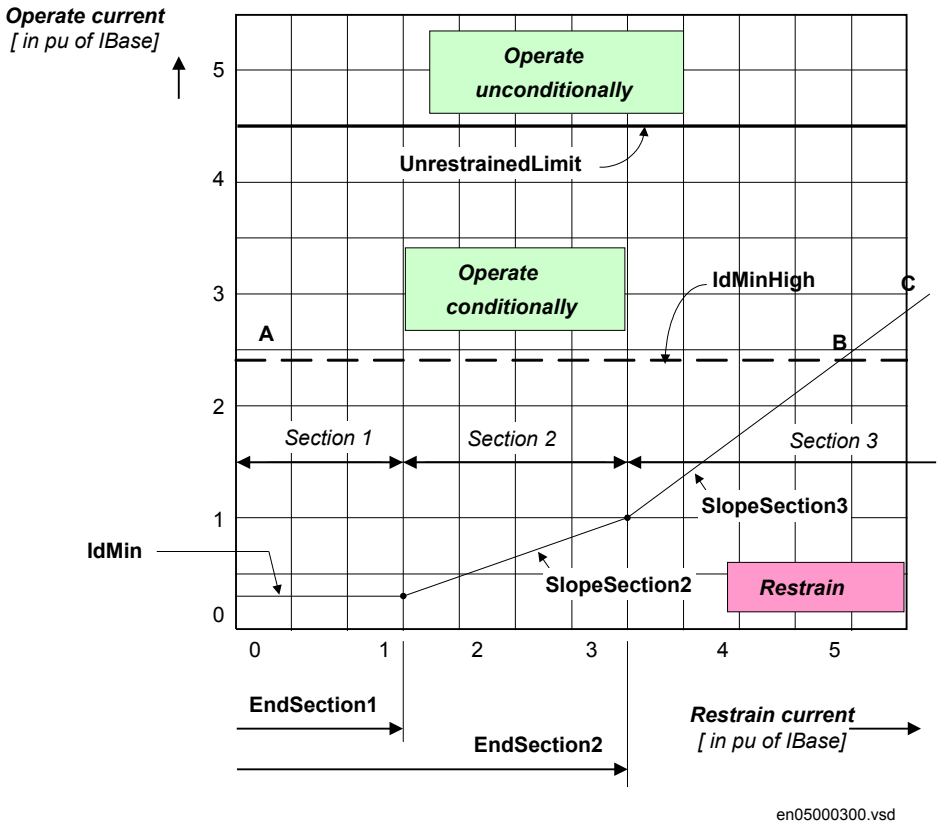

Figure 38: Over estimated charging current

On the other hand, if a high resistive fault is considered, the voltage reduction in the fault location will not be much reduced. Consequently, the value of the pre-fault “false” differential current will be a good estimation of the actual charging current.

In conclusion, it is thus realized that subtracting the pre-fault charging current from the differential current under fault conditions, will make it possible to set *Idmin* mainly without considering the charging current in order to achieve maximum sensitivity. At the same time, the stability at external faults will not be affected by this.

Time synchronization

Time synchronization of sampled current values is a crucial matter in numerical line differential protections. The synchronization is made with the so called echo method, which can be complemented with GPS synchronization. In applications with symmetrical communication delay, that is, send and receive times are equal, the echo method is sufficient. When used in networks with asymmetrical transmission times, the optional GPS synchronization is required.

Analog signal communication for line differential protection

Line differential protection uses digital 64 kbit/s communication channels to exchange telegrams between the protection IEDs. These telegrams contain current sample values, time information, trip signals, block signals, alarm signals and eight binary signals, which can be used for any purpose. Each IED can have a maximum of four communication channels.

On a two terminal line there is a need of one 64 kbit/s communication channel provided that there is only one CT in each line end, as shown in figure 39.

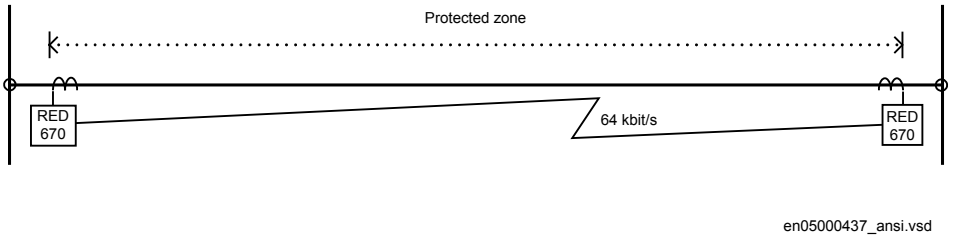

Figure 39: Two-terminal line

In case of breaker-and-a-half arrangements or ring buses, a line end will have two CTs, as shown in figure 40.

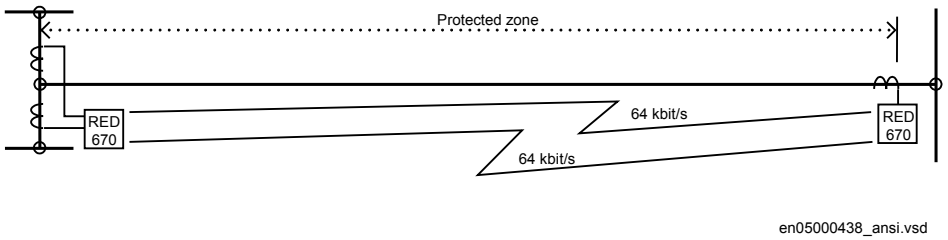

Figure 40: Two-terminal line with breaker-and-a-half

Observe that in figure 40, each of the two local CTs on the left side is treated as a separate end by the differential protection.

In this case, current values from two CTs in the double breakers, ring main or breaker-and-a-half systems end with dual breaker arrangement need to be sent to the remote end. As a 64 kbit/s channel only has capacity for one three-phase current (duplex), this implies that two communication channels will be needed, and this is also the normal solution. Alternatively, but not recommended, it is possible to add together the two local currents before sending them and in that way reduce the number of communication channels needed. This is then done in software in the IED, but by doing it this way there will be reduced information about bias currents. The bias

current is considered the greatest phase current in any line end and it is common for all three phases. When sending full information from both local CTs to the remote end, as shown in figure 7, this principle works, but when the two local currents are added together before sending the single resulting current on the single communication channel, information about the real phase currents from the two local CTs will not be available in the remote line end.

Whether it will be possible to use one communication channel instead of two (as show in figure 40) must be decided from case to case. It must be realized that correct information about bias currents will always be available locally, while only distorted information will be available in the end that receives the limited information over only one channel.

For more details about the remote communication, refer to section "Binary signal transfer".

Configuration of analog signals

The currents from the local end enter the IED via the Analog input modules as analog values. These currents need to be converted to digital values and then forwarded to Line differential protection in the local IED, as well as being transmitted to a remote IED via an LDCM (Line Differential Communication Module). The currents from a remote IED are received as digital values in the local IED via an LDCM and thereafter need to be forwarded to Line differential protectionn in the local IED.

The function LDLPDIF acts as the interface to and from Line differential protection.

The configuration of this data flow is made in the SMT tool, as shown in figure 41.

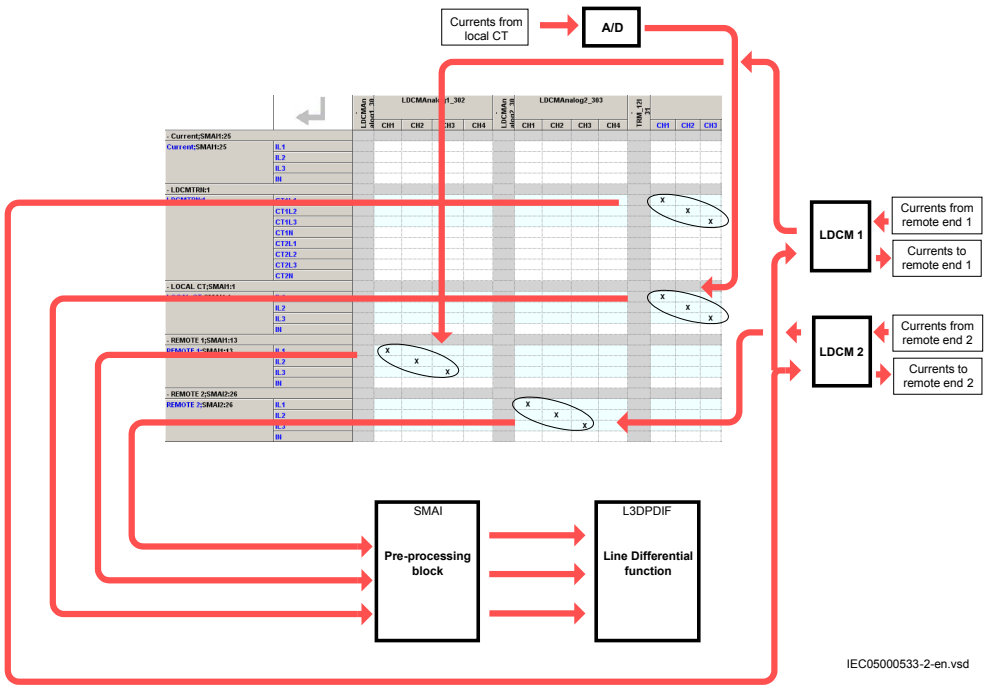

Figure 41: Typical configuration of the analog signals for a three terminal line

Figure 41 shows how one IED in a three terminal line differential protection can be configured. Notice that there are two LDCMs, each one supporting a duplex connection with a remote line end. Thus, the same local current is configured to both LDCMs, whilst the received currents from the LDCMs are configured separately to Line differential protection.

Configuration of LDCM output signals

There are a number of signals available from the LDCM that can be connected to the virtual binary inputs (SMBI) and used internally in the configuration. The signals appear only in the Signal Matrix tool where they can be mapped to the desired virtual input.

For explanation of the signals, refer to section Remote communication, Binary signal transfer to remote end in the technical reference manual. The signal name is found in the Object Properties window by clicking on the input signal number in the Signal Matrix tool. Connect the signals to the virtual inputs as desired, as shown in figure

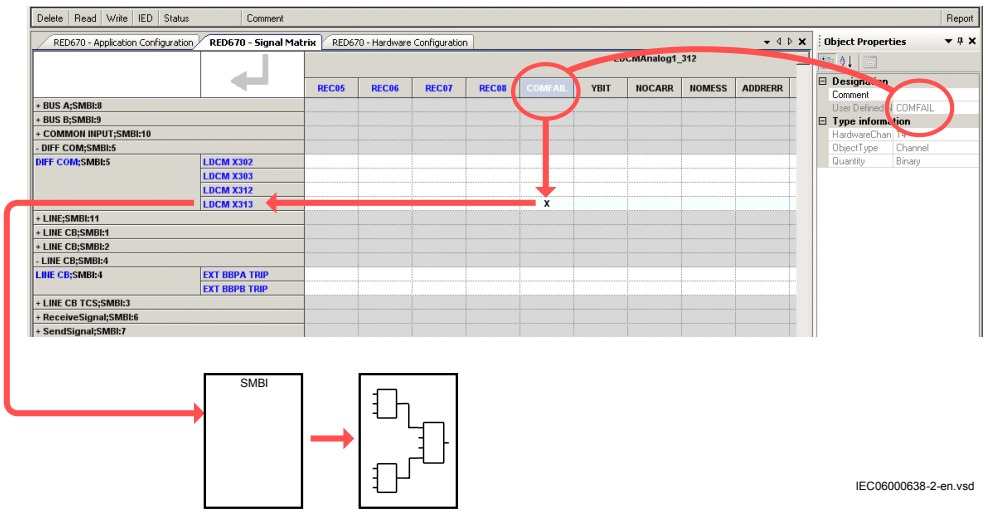

Figure 42: Example of LDCM signals as seen in the Signal matrix tool

Open CT detection

Line differential protection has a built-in, advanced open CT detection feature. This feature can block the unexpected operation created by the Line differential protection function in case of an open CT secondary circuit under a normal load condition. Observe that there is no guarantee that the Open CT algorithm will prevent an unwanted disconnection of the protected circuit. The Open CT can be detected in approximately 14 ± 2 ms, and the differential protection might by that time in some cases have already issued a trip command. Nevertheless, the information on an open CT as the reason for trip is still very important. An alarm signal can also be issued to the substation operational personnel to make remedy action once the open CT condition is detected.

The following settings parameters are related to this feature:

- Setting parameter *OpenCTEnable* enables/disables this feature.
- Setting parameter *tOCTAlarmDelay* defines the time delay after which the alarm signal will be given.
- Setting parameter *tOCTResetDelay* defines the time delay after which the open CT condition will reset once the defective CT circuits have been repaired.
- Once the open CT condition has been detected, then all the differential protection functions are blocked except the unrestraint (instantaneous) differential protection. Observe, however, that there is no guarantee that an unwanted disconnection of the protected circuit can always be prevented.

The outputs of open CT conditions are listed below:

- OPENCT: Open CT detected
- OPENCTAL: Alarm issued after the setting delay

Outputs for information on the local HMI:

- OPENCTIN: Open CT in CT group inputs (1 for input 1 and 2 for input 2)
- OPENCTPH: Open CT with phase information (1 for phase A, 2 for phase B, 3 for phase C)

3.5.2.2 Setting guidelines

Line differential protection receives information about currents from all line terminals and evaluates this information in three different analysis blocks. The results of these analyses are then forwarded to an output logic, where the conditions for trip or no trip are checked.

The three current analyses are:

- Percentage restrained differential analysis
- The 2nd and 5th harmonic analysis (only if there is a power transformer included in the protected circuit)
- Internal/external fault discriminator

General settings

IBase set in primary Amp

A common *IBase* shall be set for the protected line (circuit). Most current settings for the protection function are then related to the *IBase*. The setting of *IBase* is normally made such that it corresponds to the maximum rated CT in any of the line terminals.

NoOfTerminals

NoOfTerminals indicates to the function the number of three-phase CT sets included in the protected circuit. Note that one IED can process one or two local current terminals of the protected circuit. This is the case, for example, in breaker-and-a-half configurations in the line bay, where each of the two CT sets will be represented as one separate current terminal. A protected line with 1½ breaker configurations at each line end must consequently have *NoOfTerminals = 4*.

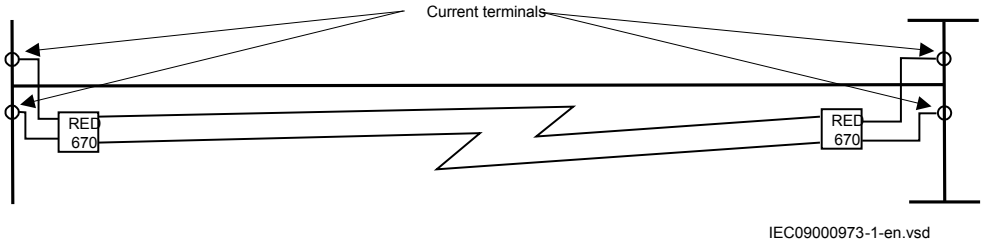

Figure 43: Example when setting NoOfTerminals = 4 in breaker-and-a-half configurations

Chan2IsLocal

Ch2IsLocal is a Boolean setting. The alternative values are *No* or *Yes*. This is related to the analogue current inputs. There are maximum six current inputs, of which four can be from the remote substations. The first local current is always connected to input channel 1. If there is one more local current, which will be the case for example, in a breaker-and-a-half bay, then the second local current is connected to input channel 2. The information whether a second local current source exists, is needed for the directional evaluation made by the internal/external fault discriminator. In case of a second local current, this evaluation is made by comparing the direction of the local negative sequence current, one at a time, with the sum of all the rest of the negative sequence currents.

Percentage restrained differential operation

Line differential protection is phase-segregated where the operate current is the vector sum of all measured currents taken separately for each phase. The restrain current, on the other hand, is considered the greatest phase current in any line end and it is common for all three phases. Observe that the protection may no more be phase-segregated when there is an in-line power transformer included in the protected circuit. These are usually of the Dy or Yd type and the three phases are related in a complicated way. For example, a single-phase earth fault on the wye side of the power transformer will be seen as a two-phase fault on the delta side of the transformer.

Operation: Line differential protection function is switched on or off with this setting.

The characteristic of the restrained differential function is shown in figure 44. The restrained characteristic is defined by the settings:

1. *IdMin*
2. *EndSection1*
3. *EndSection2*
4. *SlopeSection2*
5. *SlopeSection3*

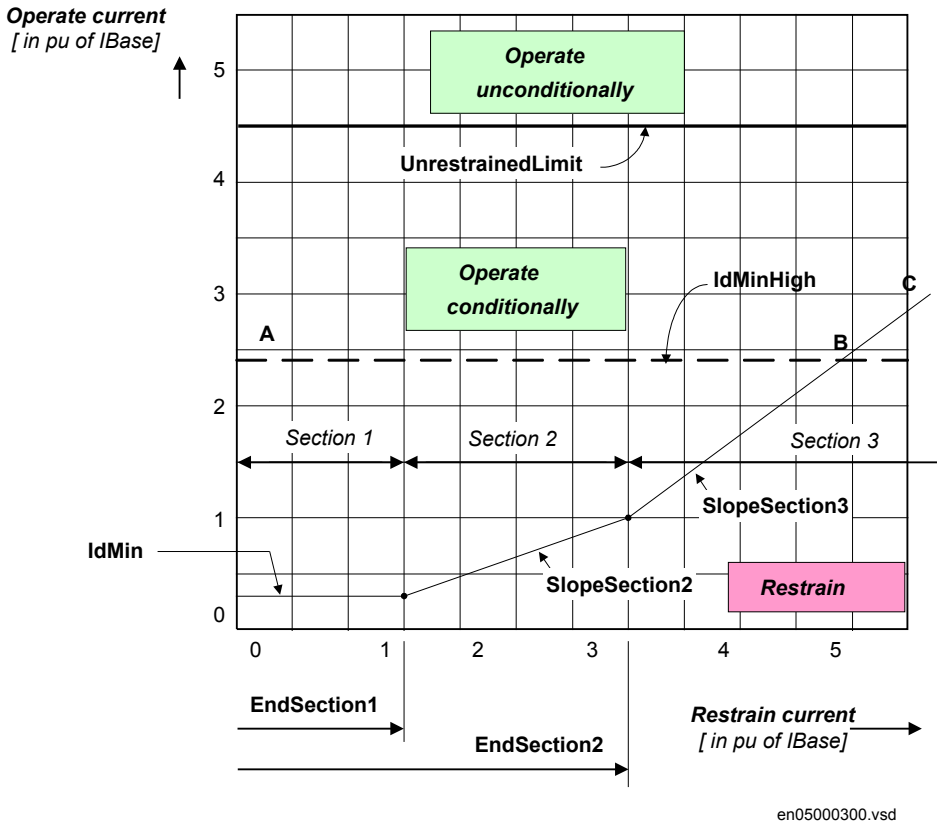

Figure 44: Restrained differential function characteristic (reset ratio 0.95)

where:

$$slope = \frac{\Delta Ioperate}{\Delta Irestrain} \cdot 100\%$$

Line differential protection is phase-segregated where the operate current is the vector sum of all measured currents taken separately for each phase. The restrain current, on the other hand, is considered as the greatest phase current in any line end and it is common for all three phases.

IdMin IBase

This setting must take into account the fundamental frequency line charging current, and whether a power transformer is included in the protected zone or not.

The positive sequence line charging current is calculated according to equation 34.

$$I_{Charge} = \frac{V}{\sqrt{3} \cdot XC1} = \frac{V}{\sqrt{3} \cdot \frac{1}{2\pi f \cdot C_1}}$$

(Equation 34)

where:

V	is system voltage
X_{C1}	is capacitive positive sequence reactance of the line
f	is system frequency
C_1	is positive sequence line capacitance

If the charging current compensation is enabled, the setting of *IdMin* must be: *IdMin* ≥ 1.2 · ICharge, concidering some margin in the setting. If the charging current compensation is disabled, the setting of *IdMin* must be *IdMin* ≥ 2.5 · ICharge. In many cases, the charging current is quite small, which makes the lower limit of the setting range, that is 20% of *IBase* the practical limit of sensitivity.

When a power transformer is included in the protected zone, the setting of *IdMin* shall be the highest of recommendations considering charging current as described above and 0.3 · *IBase*.

IdMinHigh set as a multiple of IBase

This is a setting that is used to temporarily decrease the sensitivity in situations when:

1. the line is energized
2. when a fault is classified as external
3. when a tap transformer is switched in

Energizing a line can cause transient charging currents to appear. Generally speaking, these currents are differential currents, but as they are rich on harmonics, they can only partly be measured by the differential protection which in this case measures the Fourier filtered differential current. Desensitizing the differential protection in this situation by using *IdMinHigh* instead of *IdMin* is a safety precaution, and a setting of 1.00 · *IIBase* should be suitable in most cases to cover number 1 above.

If there is a power transformer included in the protected zone, energizing the line is also mean that the transformer can be energized at the same time. In this case the internal/external fault discriminator does not make any classification, as there is only negative sequence current from one direction and consequently the harmonic restraint prevents a trip. If the transformer nominal current is more than 50% of *IBase*, *IdMinHigh* is recommended to be set at 2.00 · *IBase* otherwise it can be kept at 1.00 · *IBase*.

Number 2 means that *IdMin* is substituted by *IdMinHigh* whenever a fault is classified as external by the internal/external fault discriminator. Also here, it is an extra safety precaution to desensitize the differential protection, and a setting of 1.00 · *IBase* can normally be used.

Switching of a transformer inside the protected zone does not normally occur. If the transformer is equipped with a breaker on the HV side, it would most probably not be included in the protected zone. However, tap transformers are sometimes connected with a disconnector on the HV side, and normal procedure is then to energize the transformer with the disconnector. In such a case, the internal/external fault discriminator could classify the inrush current as an internal fault, which would then overrule the harmonic restraint. To cope with this situation, the output logic does not trip if there is a fault classified as internal at the same time as the presence of harmonics is above set level, and the differential current is below *IdMinHigh*. In other words, a high content of harmonics simultaneously as a comparatively low differential current does not indicate an internal fault, but rather a transformer inrush current. The recommended setting of *IdMinHigh* for this purpose is such that it must always be higher than the maximum inrush current of the tap transformer.

IntervIdMinHig

This is the time that *IdMinHig* is active. If a power transformer is included in the protection zone the parameter should be set up to 60 s. Otherwise a setting of 1 s is sufficient.

Idunre set as a multiple of IBase

Values of differential currents above the unrestrained limit generates a trip disregarding all other criteria that is, irrespective of the internal/external fault discriminator and any presence of harmonics. It is intended for fast tripping of internal faults with high fault currents. The recommended setting is 120% of the highest through fault current that can appear on the protected line. Consequently, to set this value properly, a fault current calculation in each specific case needs to be carried out.

For a short line or a situation with a breaker-and-a-half bay, the through fault current might be practically the same as the differential current at an internal fault. Extreme unequal CT saturation at external faults could then be a risk of unwanted operation if the unrestrained operation is used. Consequently, if the through fault currents can be of the same order as the maximum differential currents at internal faults, it is recommended to refrain from using the unrestrained operation, by setting the max value *Idunre* = 50 · *IBase*.

On long lines, the through fault current is often considerably less than the maximum differential current at internal faults, and a suitable setting of the unrestrained level is then easy to calculate.

When a transformer is included in the protected zone, the maximum inrush current must be considered when the unrestrained level is calculated. The inrush current

appears from one side of the transformer, whilst the maximum differential current at internal faults is limited by the source impedances on all sides of the transformer.

EndSection1 set as a multiple of IBase

The default value 1.25 is generally recommended. If the conditions are known more in detail, other values can be chosen in order to increase or decrease the sensitivity.

EndSection2 set as a multiple of IBase

The default value 3.00 is generally recommended. If the conditions are known more in detail, other values can be chosen in order to increase or decrease the sensitivity.

SlopeSection2 set as a percentage value: [Operate current/Restrain current] · 100%

The default value 40.0 is generally recommended. If the conditions are known more in detail, other values can be chosen in order to increase or decrease the sensitivity.

SlopeSection3 set as a percentage value: [Operate current/Restrain current] · 100%

The default value 80.0 is generally recommended. If the conditions are known more in detail, other values can be chosen in order to increase or decrease the sensitivity.

2nd and 5th harmonic analysis

When the harmonic content is above the set level, the restrained differential operation is blocked. However, if a fault has been classified as internal by the negative sequence fault discriminator, any harmonic restraint is overridden. (Exemption: Classification as internal fault at the same time as the harmonic content is above set level and the differential current is below *IdMinHigh*, will not cause a trip).

I2/I1Ratio, set as a percentage value: [I2/I1 · 100%]

The set value is the ratio of the second harmonic of the differential current to the fundamental frequency of the differential current.

Transformer inrush currents cause high degrees of second harmonic in the differential current. The default value of 15% serves as a reliable value to detect power transformer inrush currents as the content at this phenomenon is always higher than 23%.

CT saturation causes second harmonics of considerable value on the CT secondary side, which contributes to the stabilization of the relay at through fault conditions. It is, therefore, strongly recommended to maintain a sensitive setting of the *I2/I1Ratio* also when a power transformer is not included in the protected zone.

I5/I1Ratio set as a percentage value: [I5/I1 · 100%]

The set value is the ratio of the fifth harmonic of the differential current to the fundamental frequency of the differential current.

A 20 – 30% over excitation of a transformer can cause an increase in the excitation current of 10 to 100 times the normal value. This excitation current is a true differential current if the transformer is inside the protected zone. It has a high degree of fifth harmonic, and the default setting of 25% will be suitable in most cases to detect the phenomenon. As CT saturation also causes fifth harmonics on the secondary side, it is recommended to maintain this setting of 25% even if no power transformer is included in the protected zone.

Internal/external fault discriminator

NegSeqDiff

The negative sequence fault discriminator can be set *Enabled*/*Disabled*. It is an important complement to the percentage restrained differential function. As it is directional, it can distinguish between external and internal faults also in difficult conditions, such as CT saturation, and so on. It is strongly recommended that it be always active (*Enabled*).

NegSeqROA

This is the setting of the relay operate angle of the negative sequence IBased internal/external fault discriminator. The directional test, is made such that the phase angle of the sum of the local negative sequence currents is compared to the phase angle of the sum of all remote end negative sequence currents, as shown in figure 45. Ideally the angle is 0 degree for internal faults and 180 degrees for external faults. However, measuring errors caused by, for example, CT saturation as well as different phase angles of the sources, require a safety margin in the *ROA* (Relay Operate Angle) setting. The default value 60 degrees is recommended in most cases. The setting is a compromise between security and reliability, and a more detailed analysis is recommended for long lines where the phase angle of the source voltages in the different line ends can differ significantly.

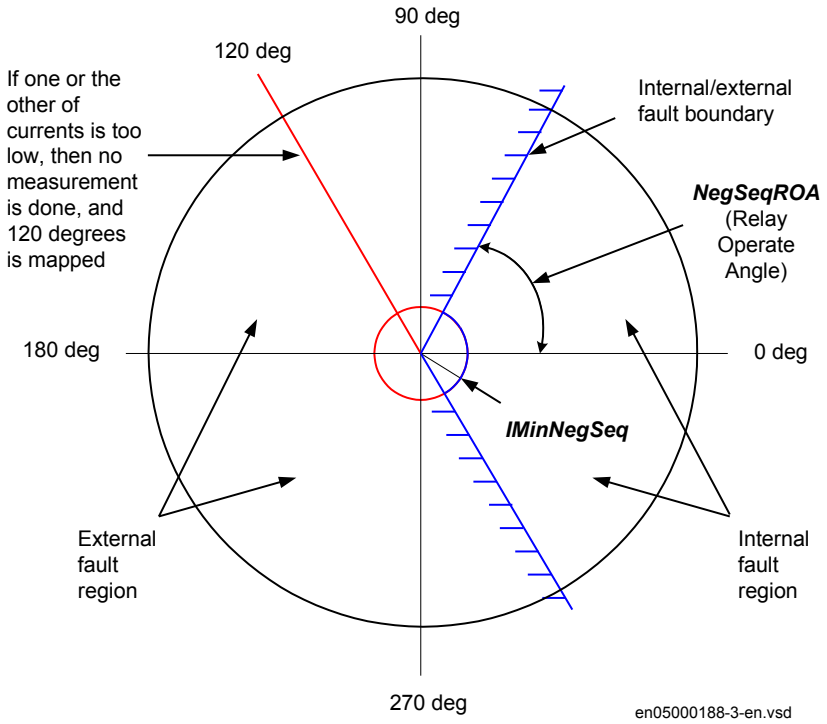

Figure 45: Negative sequence current function Relay Operate Angle ROA.

IminNegSeq set as a multiple of IBase

The negative sequence currents are compared if above the set threshold value *IminNegSeq*. If either these sums is below the threshold, no comparison is made. Neither internal, nor external fault needs to be declared in this case. The default value 0.04 · *IBase* can be used if no special considerations, such as for example, extremely week sources must be taken into account.

Power transformer in the protected zone

One three-winding transformer or two two-winding transformers can be included in the line protection zone. The parameters below are used for this purpose. The alternative with one two-winding transformer in the protected zone is shown in figure 46 and figure 47.

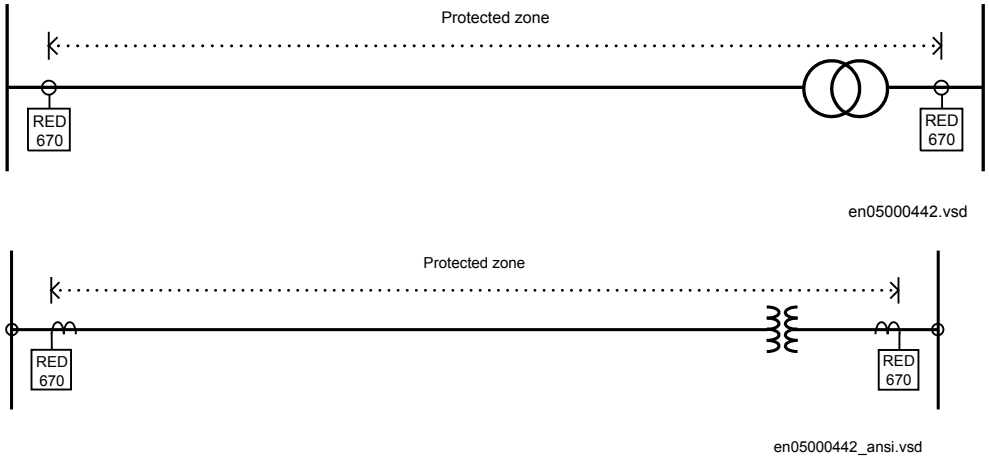

Figure 46: One two–winding transformer in the protected zone

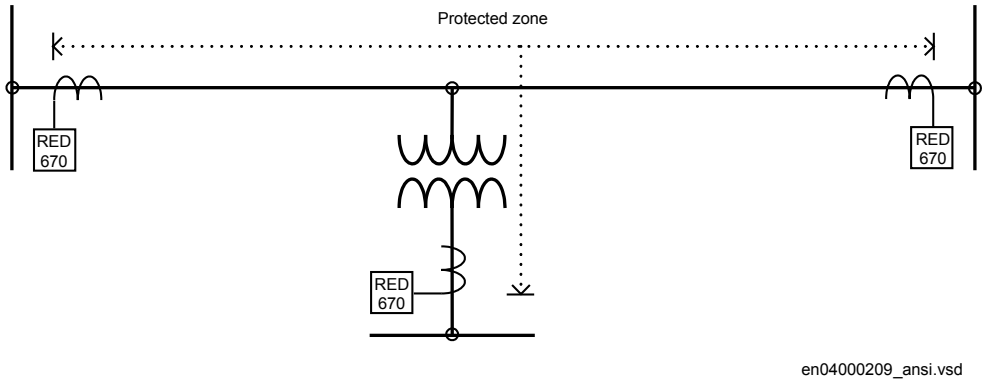

Figure 47: One two–winding transformer in the protected zone

An alternative with two two-winding transformers in the protected zone is shown in figure 48.

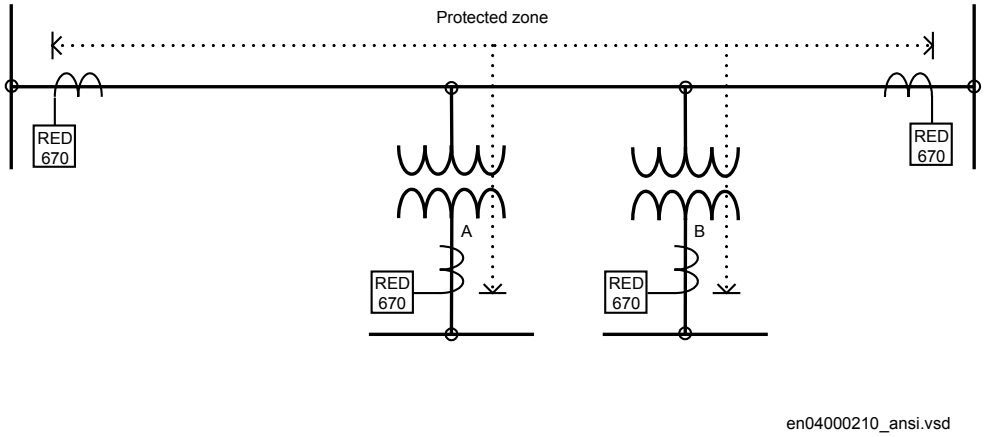

Figure 48: Two two–winding transformers in the protected zone

An alternative with one three-winding transformer in the protected zone is shown in figure 49. Observe that in this case, the three-winding power transformer is seen by the differential protection as two separate power transformers, A and B, which have one common winding on the HV side.

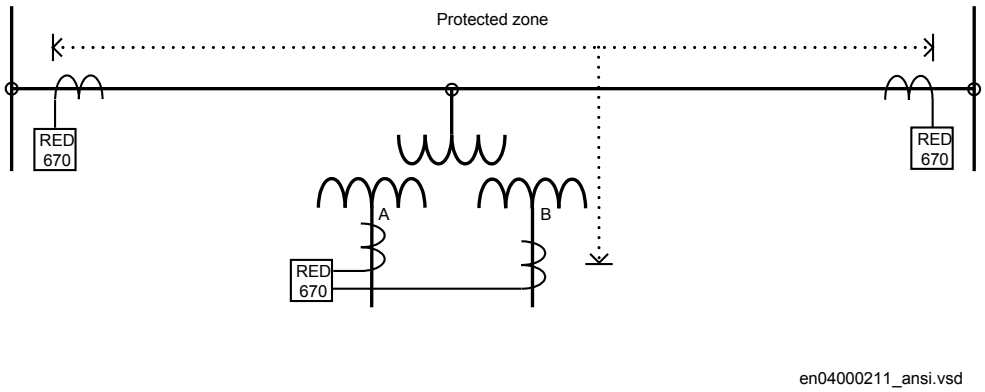

Figure 49: One three–winding transformer in the protected zone

TransfAonInpCh

This parameter is used to indicate that a power transformer is included in the protection zone at current terminal X. This can be either a two-winding transformer or the first secondary winding of a three-winding transformer. The current transformer feeding the IED is located at the low voltage side of the transformer. The parameter is set within the range 0 – 6, where 0 (zero) is used if no transformer A is included in the protection zone.

The setting gives the current input on the differential current function block to be recalculated. The function is normally referenced to the high voltage side of the power

transformer. The set input measured current I will be recalculated to I · *TraAWind2Volt*/*TraAWind1Volt* and shifted with the set vector angle *ClockNumTransA*.

TraAWind1Volt
The rated voltage (kV) of the primary side (line side = high voltage side) of the power transformer A.

TraAWind2Volt
The rated voltage (kV) of the secondary side (non-line side = low voltage side) of the power transformer A.

ClockNumTransA
This is the phase shift from primary to secondary side for power transformer A. The phase shift is given in intervals of 30 degrees, where 1 is -30 degrees, 2 is -60 degrees, and so on. The parameter can be set within the range 0 – 11.

ZeroSeqPassTraA
This parameter indicates if zero sequence currents can pass power transformer A. The setting is No/Yes where for example No would apply for a delta-wye transformer.

TransfBonInpCh
This parameter is used to indicate that a power transformer is included in the protection zone at current terminal Y. This can be either a two-winding transformer or the second secondary winding of a three-winding transformer. The current transformer feeding the IED is located at the low voltage side of the transformer. The parameter is set within the range 0 – 6, where 0 (zero) is used if no transformer B is included in the protection zone.

The setting gives the current input on the differential current function block to be recalculated. The function is normally referenced to the high voltage side of the power transformer. The set input measured current I will be recalculated to I · *TraBWind2Volt*/*TraBWind1Volt* and shifted with the set vector angle *ClockNumTransB*.

TraBWind1Volt
The rated voltage (kV) of the primary side (line side = high voltage side) of the power transformer B.

TraBWind2Volt
The rated voltage (kV) of the secondary side (non-line side = low voltage side) of the power transformer B.

General settings

ClockNumTransB

This is the phase shift from primary to secondary side for power transformer B. The phase shift is given in intervals of 30 degrees, where 1 is -30 degrees, 2 is -60 degrees and so on. The parameter can be set within the range 0 – 11.

ZeroSeqPassTraB

This parameter indicates if zero sequence currents can pass power transformer B. The setting is *No/Yes* where, for example, No would apply for a delta-wye transformer.

ZerSeqCurSubtr

The elimination of zero sequence currents in the differential protection can be set *Enabled*/*Disabled*. In case of a power transformer in the protected zone, where the zero sequence current cannot be transformed through the transformer, that is, in the great majority of cases, the zero sequence current must be eliminated.

CrossBlock

The possibility of cross-blocking can be set *Enabled*/*Disabled*. The meaning of cross-blocking is that the 2nd and 5th harmonic blocking in one phase also blocks the differential function of the other phases. It is recommended to enable the cross-blocking if a power transformer is included in the protection zone, otherwise not.

IMaxAddDelay set as a multiple of IBase

The current level, under which a possible extra added time delay (of the output trip command), can be applied. The possibility for delayed operation for small differential currents is typically used for lines with a (minor) tapped transformer somewhere in the protected circuit and where no protection terminal of the multi-terminal differential protection is applied at the transformer site. If such a minor tap transformer is equipped with a circuit breaker and its own local protection, then this protection must operate before the line differential protection to achieve selectivity for faults on the low voltage side of the transformer. To ensure selectivity, the current setting must be higher than the greatest fault current for faults at the high voltage side of the transformer.

AddDelay

The possibility of delayed operation for small differential currents can be set *Enabled*/*Disabled*.

CurveType

This is the setting of type of delay for low differential currents. Identification of the different inverse curves can be found in section "Setting parameters".

IDMTtMin

This setting limits the shortest delay when inverse time delay is used. Operation faster than the set value of *IDMTtmin* is prevented.

If the user-programmable curve is chosen the characteristic of the curve is defined by equation 35.

$$t_{op} = TD\left(\frac{a}{\left(\frac{I_{Measured}}{IMaxAddDelay}\right)^{P} - c} + b\right)$$

(Equation 35)

where:

t_{op}	is operate time
TD	is time multiplier of the inverse time curve
a, b, c, p	are settings that will model the inverse time characteristic

In this section it is described how setting parameters can be chosen for a line with a power transformer in the protected zone. The line is shown in figure 50, and the circuit impedances are shown in figure 51. The protection zone is limited by the current transformers CT1, CT2 and CT3. The terminals are situated in two separate substations, Substation 1 and Substation 2. The circuit is protected by two protection terminals, Protection Terminal 1, and Protection Terminal 2. Except for a minor distortion of data due the communication between the two protection terminals, the protection terminals process the same data. Both protection terminals are masters. If at least one of them signalizes an internal fault, the protected circuit gets disconnected. Settings of Protection Terminal 1 and Protection Terminal 2 must be equal, except for a few parameters which can be pointed out.

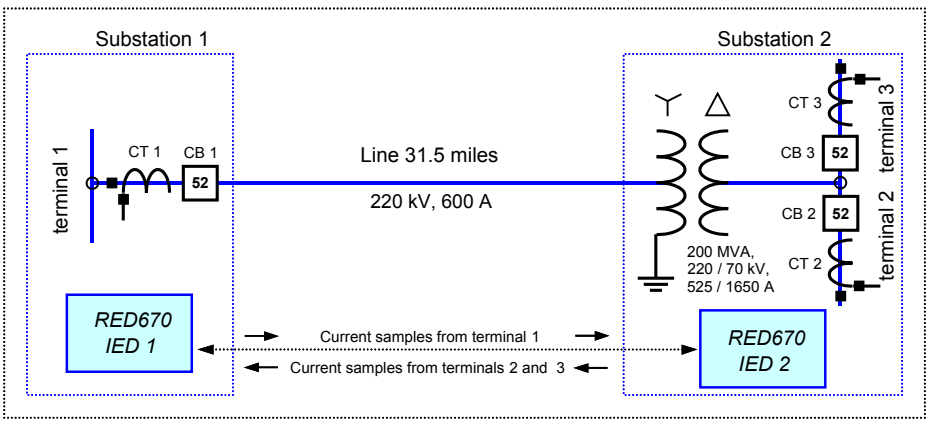

Figure 50: Line differential protection with power transformer in protected zone

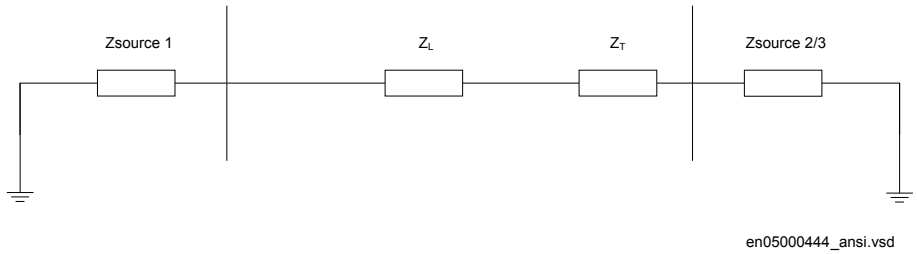

Figure 51: System impedances

where:

Line data $Z_L \approx X_L = 15.0\Omega$

Transformer data is $X\% = 10\% \Rightarrow X_{T220} = \frac{10}{100} \cdot \frac{220^2}{200} = 24.2\Omega$

Source impedance is $Z_{Source1} = 7.0\Omega$

where:

Line data $Z_L \approx X_L = 15.0\Omega$

Transformer data is $X\% = 10\% \Rightarrow X_{T220} = \frac{10}{100} \cdot \frac{220^2}{200} = 24.2\Omega$

Source impedance is $Z_{Source1} = 7.0\Omega$

$$Z_{Source2/3} = 5\Omega \Rightarrow (Z_{Source2/3})_{220} = \left(\frac{220}{70}\right)^2 \cdot 5 = 49.4\Omega$$

$$Z_{Source2/3} = 5\Omega \Rightarrow (Z_{Source2/3})_{220} = \left(\frac{220}{70}\right)^2 \cdot 5 = 49.4\Omega$$

Table 31: General settings

Setting	IED 1	IED 2	Remarks
Operation	On	On	Operation Mode: On (active).
NoOfTerminals	3	3	Number of current terminals (ends) of the circuit.
Chan2IsLocal	No	Yes	Local current source connected to Input Channel 2 only at IED 2 (Rmk. 1).
IBase	600 A	600 A	Reference current of the protection in primary (system) Amperes (Rmk. 2)
TransfAonInpCh	2	1	The location for Yd1 power transformer (Rmk 3).
TraAWind1Volt	220 kV	220 kV	Transformer A, Y-side voltage in kV.
TraAWind2Volt	33 kV	33 kV	Transformer A, d-side voltage in kV.
ClockNumTransA	1	1	LV d-side lags Y-side by 30 degrees.
ZerSeqPassTraA	No	No	Zero sequence current can not pass a delta winding
TransfBonInpCh	3	2	The location for Yd1 power transformer (Rmk. 3).
TraBWind1Volt	220 kV	220 kV	Transformer B, Y-side voltage in kV.
TraBWind2Volt	33 kV	33 kV	Transformer B, d-side voltage in kV.
ClockNumTransB	1	1	LV d-side lags Y-side by 30 degrees.
ZerSeqPassTraB	No	No	Zero sequence current can not pass a delta winding.
ZerSeqCurSubtr	On	On	Zero-sequence currents are subtracted from differential-, and bias currents (Rmk. 4).

Table 32: Setting group N

Setting	IED 1	IED 2	Remarks
ChargCurEnable	Off	Off	Charging current not eliminated. Default.
IdMin	0.35 · baseCurrent	0.35 · baseCurrent	Sensitivity in Section 1 of the operate - restrain characteristic.
EndSection1	1.25 · baseCurrent	1.25 · baseCurrent	End of section 1 of the operate - restrain characteristic, as multiple of base current.
EndSection2	3.00 · baseCurrent	3.00 · baseCurrent	End of section 2 of the operate - restrain characteristic, as multiple of base current.
SlopeSection2	40%	40 %	Slope of the operate - restrain characteristic in Section 2, in percent.
SlopeSection3	80%	80%	Slope of the operate - restrain characteristic in Section 3, in percent.
IdMinHigh	2.00 · baseCurrent	2.00 · baseCurrent	Temporarily decreased sensitivity, used in special situations (Rmk. 5).
IntervIdMinHig	60.000 sec	0.250 sec	Time interval when IdMinHig is active (Rmk. 6)
Idunre	5.50 · baseCurrent	5.50 · baseCurrent	Unrestrained operate, (differential) current limit. (Rmk. 7)
CrossBlock	1	1	CrossBlock logic scheme applied (Rmk. 8).
I2/I1Ratio	15%	15%	Second to fundamental harmonic ratio limit.
I5/I1Ratio	25%	25%	Fifth to fundamental harmonic ratio limit.
NegSeqDiff	On	On	Internal/external fault discriminator On. (Default).
IminNegSeq	0.04 · baseCurrent	0.04 · baseCurrent	Minimum value of negative-sequence current, as multiple of the base current.
NegSeqROA	60.0 deg	60.0 deg	Internal/external fault discriminator operate angle (ROA), in degrees (Default).

Table continues on next page

Setting	IED 1	IED 2	Remarks
AddDelay	Off	Off	Additional delay Off (Default).
ImaxAddDelay	1.00 · baseCurrent	1.00 · baseCurrent	Not applicable in this case (Default).
CurveType	15	15	Not applicable in this case (Default).
DefDelay	0.100 s	0.100 s	Not applicable in this case (Default).
IDMTtMin	0.010 s	0.010 s	Not applicable in this case (Default).
TD	0.00	0.00	Not applicable in this case (Default).
p	0.02	0.02	Not applicable in this case (Default).
a	0.14	0.14	Not applicable in this case (Default).
b	1.00	1.00	Not applicable in this case (Default).
c	1.00	1.00	Not applicable in this case (Default).

Remarks:

1 This setting is different for IED 1 and IED 2. A directional comparison is executed by the internal/external fault discriminator in each IED separately. When doing this, the IED uses the local negative sequence current as a directional reference. In this example, IED 2 executes two directional comparisons, one for each local current terminal (IED 2 transforms the currents to the high-voltage Y-side before any directional check is made). If the directional comparison in IED 1 indicates an internal fault, then of course, that IED declares that it is an internal fault, and acts accordingly. In the other line end, if at least one of the two directional checks in IED 2 indicates an internal fault, then and only then, that IED also declares that it is an internal fault.

2 The parameter *IBase* is the reference current of Line differential protection given in primary Amperes. CT1 in terminal 1 has ratio 600/5 and based on that we chose *IBase* to 600 A in this case.

3 In this case, only one physical power transformer is included in the protected circuit. However, in order to handle the situation with two CTs on the LV side of the transformer, one more fictitious power transformer, is introduced. Thus, transformer A will be installed at current terminal 2, and transformer B, which is identical to A, at current terminal 3. The currents, measured at current terminals 2 and 3, are separately transformed by the multi-terminal differential algorithm to the high-voltage side of the transformer, using one and the same transformation rule. This rule is defined by the power transformer transformation ratio, and its type, which is Yd1 in this example. If a power transformer is included in the protected zone, it is expected that the low-voltage side of the power transformer is at the current terminal. The differential algorithm then transforms the low-voltage side currents to the high-voltage side. The differential currents are calculated referred to the power transformer high-voltage side, where the protected power lines are supposed to be.

Table continues on next page

4 ground faults on the Y-side of the transformer will cause a zero sequence current that will flow in the Y-winding of the power transformer. This zero sequence current will not appear outside the transformer on the d-side, and will consequently not be measured by CT 2 and CT 3. Thus, in case a Y-side fault is external to the protected zone, the zero sequence current that passes the neutral point of the transformer will appear as false differential current. Of course this could cause an unwanted trip if not zero sequence currents are subtracted from the fundamental frequency differential current.

5 Energizing the circuit means that the power transformer will be energized at the same time. This is assumed to be made always from the HV side, and the harmonic restraint will detect the inrush current and prevent a trip. Setting *IdMinHigh* = 2.00 · *baseCurrent* is motivated in this case as the transformer is large.

6 The interval when *IdMinHigh* is active, is set to 60 s because a power transformer is included in the protected circuit.

7 The unrestrained operate differential current value shall be greater than the highest through fault current. This current appears at a three phase short circuit on the 33 kV side of the transformer and can be calculated as:

$$I_{Through} = \frac{220}{\sqrt{3} \cdot (7.0 + 15.0 + 24.2)} = 2.75kA$$

(Equation 44)

With a safety margin of 20% we get:

$$Idunre = \frac{1.2 \cdot I_{Through}}{Ibase} = \frac{1.2 \cdot 2.75kA}{0.6kA} = \frac{3.30kA}{0.6kA} = 5.50$$

(Equation 45)

8 The cross-block logic shall always be active when there is a power transformer in the protected zone.

3.5.2.3 Setting parameters

Table 33: L3CPDIF (87L) Group settings (basic)

Name	Values (Range)	Unit	Step	Default	Description
Operation	Disabled Enabled	-	-	Disabled	Disable/Enable Operation
IdMin	0.20 - 2.00	IB	0.01	0.30	Oper - restr charact., section 1 sensitivity, multiple IBase
IdMinHigh	0.20 - 10.00	IB	0.01	0.80	Initial lower sensitivity, as multiple of IBase
tIdMinHigh	0.000 - 60.000	s	0.001	1.000	Time interval of initial lower sensitivity, in sec
IdUnre	1.00 - 50.00	IB	0.01	10.00	Unrestrained differential current limit, multiple of IBase
NegSeqDiffEn	Disabled Enabled	-	-	Enabled	Off/On selection for internal / external fault discriminator
NegSeqROA	30.0 - 120.0	Deg	1.0	60.0	Internal/external fault discriminator Operate Angle, degrees

Table continues on next page

Name	Values (Range)	Unit	Step	Default	Description
IMinNegSeq	0.01 - 0.20	IB	0.01	0.04	Min. value of neg. seq. curr. as multiple of IBase
CrossBlockEn	No Yes	-	-	No	Off/On selection of the cross -block logic
ChargCurEnable	Disabled Enabled	-	-	Disabled	Off/On selection for compensation of charging currents
AddDelay	Disabled Enabled	-	-	Disabled	Off/On selection for delayed diff. trip command
IMaxAddDelay	0.20 - 5.00	IB	0.01	1.00	Below limit, extra delay can be applied, multiple of IBase
tDefTime	0.000 - 6.000	s	0.001	0.000	Definite time additional delay in seconds
tMinInv	0.001 - 6.000	s	0.001	0.010	Inverse Delay Minimum Time. In seconds
CurveType	ANSI Ext. inv. ANSI Very inv. ANSI Norm. inv. ANSI Mod. inv. ANSI Def. Time L.T.E. inv. L.T.V. inv. L.T. inv. IEC Norm. inv. IEC Very inv. IEC inv. IEC Ext. inv. IEC S.T. inv. IEC L.T. inv. IEC Def. Time Programmable RI type RD type	-	-	IEC Def. Time	19 curve types. Example: 15 for definite time delay.
TD	0.05 - 1.10	-	0.01	1.00	Time Multiplier Setting (TMS) for inverse delays
IdiffAlarm	0.05 - 1.00	IB	0.01	0.15	Sustained differential current alarm, factor of IBase
tAlarmdelay	0.000 - 60.000	s	0.001	10.000	Delay for alarm due to sustained differential current, in s

Table 34: L3CPDIF (87L) Group settings (advanced)

Name	Values (Range)	Unit	Step	Default	Description
EndSection1	0.20 - 1.50	IB	0.01	1.25	End of section 1, as multiple of reference current IBase
EndSection2	1.00 - 10.00	IB	0.01	3.00	End of section 2, as multiple of reference current IBase
SlopeSection2	10.0 - 50.0	%	0.1	40.0	Slope in section 2 of operate-restrain characteristic, in %
SlopeSection3	30.0 - 100.0	%	0.1	80.0	Slope in section 3 of operate- restrain characteristic, in %

Table continues on next page

Name	Values (Range)	Unit	Step	Default	Description
I2/I1Ratio	5.0 - 100.0	%	1.0	10.0	Max. ratio of second harmonic to fundamental harm dif. curr. in %
I5/I1Ratio	5.0 - 100.0	%	1.0	25.0	Max. ratio of fifth harmonic to fundamental harm dif. curr. in %
p	0.01 - 1000.00	-	0.01	0.02	Settable curve parameter, user-programmable curve type.
a	0.01 - 1000.00	-	0.01	0.14	Settable curve parameter, user-programmable curve type.
b	0.01 - 1000.00	-	0.01	1.00	Settable curve parameter, user-programmable curve type.
c	0.01 - 1000.00	-	0.01	1.00	Settable curve parameter, user-programmable curve type.
OpenCTEnable	Disabled Enabled	-	-	Enabled	Open CTEnable Off/On
tOCTAlarmDelay	0.100 - 10.000	s	0.001	1.000	Open CT: time in s to alarm after an open CT is detected
tOCTResetDelay	0.100 - 10.000	s	0.001	0.250	Reset delay in s. After delay, diff. function is activated

Table 35: L3CPDIF (87L) Non group settings (basic)

Name	Values (Range)	Unit	Step	Default	Description
NoOfTerminals	2 3	-	-	2	Number of current terminals of the protected circuit
Chan2IsLocal	No Yes	-	-	No	2-nd local current connected to input channel 2, Yes/ No
IBase	50.0 - 9999.9	A	0.1	3000.0	Base (reference) current of the differential protection

Table 36: L6CPDIF (87L) Group settings (basic)

Name	Values (Range)	Unit	Step	Default	Description
Operation	Disabled Enabled	-	-	Disabled	Disable/Enable Operation
IdMin	0.20 - 2.00	IB	0.01	0.30	Oper - restr charact., section 1 sensitivity, multiple IBase
IdMinHigh	0.20 - 10.00	IB	0.01	0.80	Initial lower sensitivity, as multiple of IBase
tIdMinHigh	0.000 - 60.000	s	0.001	1.000	Time interval of initial lower sensitivity, in sec
IdUnre	1.00 - 50.00	IB	0.01	10.00	Unrestrained differential current limit, multiple of IBase
NegSeqDiffEn	Disabled Enabled	-	-	Enabled	Off/On selection for internal / external fault discriminator
NegSeqROA	30.0 - 120.0	Deg	1.0	60.0	Internal/external fault discriminator Operate Angle, degrees

Table continues on next page

Name	Values (Range)	Unit	Step	Default	Description
IMinNegSeq	0.01 - 0.20	IB	0.01	0.04	Min. value of neg. seq. curr. as multiple of IBase
CrossBlockEn	No Yes	-	-	No	Off/On selection of the cross -block logic
I2/I1Ratio	5.0 - 100.0	%	1.0	10.0	Max. ratio of second harmonic to fundamental harm dif. curr. in %
I5/I1Ratio	5.0 - 100.0	%	1.0	25.0	Max. ratio of fifth harmonic to fundamental harm dif. curr. in %
ChargCurEnable	Disabled Enabled	-	-	Disabled	Off/On selection for compensation of charging currents
AddDelay	Disabled Enabled	-	-	Disabled	Off/On selection for delayed diff. trip command
IMaxAddDelay	0.20 - 5.00	IB	0.01	1.00	Below limit, extra delay can be applied, multiple of IBase
tDefTime	0.000 - 6.000	s	0.001	0.000	Definite time additional delay in seconds
tMinInv	0.001 - 6.000	s	0.001	0.010	Inverse Delay Minimum Time. In seconds
CurveType	ANSI Ext. inv. ANSI Very inv. ANSI Norm. inv. ANSI Mod. inv. ANSI Def. Time L.T.E. inv. L.T.V. inv. L.T. inv. IEC Norm. inv. IEC Very inv. IEC inv. IEC Ext. inv. IEC S.T. inv. IEC L.T. inv. IEC Def. Time Programmable RI type RD type	-	-	IEC Def. Time	19 curve types. Example: 15 for definite time delay.
TD	0.05 - 1.10	-	0.01	1.00	Time Multiplier Setting (TMS) for inverse delays
IdiffAlarm	0.05 - 1.00	IB	0.01	0.15	Sustained differential current alarm, factor of IBase
tAlarmdelay	0.000 - 60.000	s	0.001	10.000	Delay for alarm due to sustained differential current, in s

Table 37: L6CPDIF (87L) Group settings (advanced)

Name	Values (Range)	Unit	Step	Default	Description
EndSection1	0.20 - 1.50	IB	0.01	1.25	End of section 1, as multiple of reference current IBase
EndSection2	1.00 - 10.00	IB	0.01	3.00	End of section 2, as multiple of reference current IBase
SlopeSection2	10.0 - 50.0	%	0.1	40.0	Slope in section 2 of operate-restrain characteristic, in %
SlopeSection3	30.0 - 100.0	%	0.1	80.0	Slope in section 3 of operate- restrain characteristic, in %
p	0.01 - 1000.00	-	0.01	0.02	Settable curve parameter, user-programmable curve type.
a	0.01 - 1000.00	-	0.01	0.14	Settable curve parameter, user-programmable curve type.
b	0.01 - 1000.00	-	0.01	1.00	Settable curve parameter, user-programmable curve type.
c	0.01 - 1000.00	-	0.01	1.00	Settable curve parameter, user-programmable curve type.
OpenCTEnable	Disabled Enabled	-	-	Enabled	Open CT detection feature. Open CTEnable Off/On
tOCTAlarmDelay	0.100 - 10.000	s	0.001	1.000	Open CT: time in s to alarm after an open CT is detected
tOCTResetDelay	0.100 - 10.000	s	0.001	0.250	Reset delay in s. After delay, diff. function is activated

Table 38: L6CPDIF (87L) Non group settings (basic)

Name	Values (Range)	Unit	Step	Default	Description
NoOfTerminals	2 3 4 5 6	-	-	2	Number of current terminals of the protected circuit
Chan2IsLocal	No Yes	-	-	No	2-nd local current connected to input channel 2, Yes/ No
IBase	50.0 - 9999.9	A	0.1	3000.0	Base (reference) current of the differential protection

Table 39: LT3CPDIF (87LT) Group settings (basic)

Name	Values (Range)	Unit	Step	Default	Description
Operation	Disabled Enabled	-	-	Disabled	Disable/Enable Operation
IdMin	0.20 - 2.00	IB	0.01	0.30	Oper - restr charact., section 1 sensitivity, multiple IBase
IdMinHigh	0.20 - 10.00	IB	0.01	0.80	Initial lower sensitivity, as multiple of IBase
tIdMinHigh	0.000 - 60.000	s	0.001	1.000	Time interval of initial lower sensitivity, in sec
IdUnre	1.00 - 50.00	IB	0.01	10.00	Unrestrained differential current limit, multiple of IBase
NegSeqDiffEn	Disabled Enabled	-	-	Enabled	Off/On selection for internal / external fault discriminator
NegSeqROA	30.0 - 120.0	Deg	1.0	60.0	Internal/external fault discriminator Operate Angle, degrees
IMinNegSeq	0.01 - 0.20	IB	0.01	0.04	Min. value of neg. seq. curr. as multiple of IBase
CrossBlockEn	No Yes	-	-	No	Off/On selection of the cross -block logic
ChargCurEnable	Disabled Enabled	-	-	Disabled	Off/On selection for compensation of charging currents
AddDelay	Disabled Enabled	-	-	Disabled	Off/On selection for delayed diff. trip command
IMaxAddDelay	0.20 - 5.00	IB	0.01	1.00	Below limit, extra delay can be applied, multiple of IBase
tDefTime	0.000 - 6.000	s	0.001	0.000	Definite time additional delay in seconds
tMinInv	0.001 - 6.000	s	0.001	0.010	Inverse Delay Minimum Time. In seconds
CurveType	ANSI Ext. inv. ANSI Very inv. ANSI Norm. inv. ANSI Mod. inv. ANSI Def. Time L.T.E. inv. L.T.V. inv. L.T. inv. IEC Norm. inv. IEC Very inv. IEC inv. IEC Ext. inv. IEC S.T. inv. IEC L.T. inv. IEC Def. Time Programmable RI type RD type	-	-	IEC Def. Time	19 curve types. Example: 15 for definite time delay.

Table continues on next page

Name	Values (Range)	Unit	Step	Default	Description
TD	0.05 - 1.10	-	0.01	1.00	Time Multiplier Setting (TMS) for inverse delays
IdiffAlarm	0.05 - 1.00	IB	0.01	0.15	Sustained differential current alarm, factor of IBase
tAlarmdelay	0.000 - 60.000	s	0.001	10.000	Delay for alarm due to sustained differential current, in s

Table 40: LT3CPDIF (87LT) Group settings (advanced)

Name	Values (Range)	Unit	Step	Default	Description
EndSection1	0.20 - 1.50	IB	0.01	1.25	End of section 1, as multiple of reference current IBase
EndSection2	1.00 - 10.00	IB	0.01	3.00	End of section 2, as multiple of reference current IBase
SlopeSection2	10.0 - 50.0	%	0.1	40.0	Slope in section 2 of operate-restrain characteristic, in %
SlopeSection3	30.0 - 100.0	%	0.1	80.0	Slope in section 3 of operate- restrain characteristic, in %
I2/I1Ratio	5.0 - 100.0	%	1.0	10.0	Max. ratio of second harmonic to fundamental harm dif. curr. in %
I5/I1Ratio	5.0 - 100.0	%	1.0	25.0	Max. ratio of fifth harmonic to fundamental harm dif. curr. in %
p	0.01 - 1000.00	-	0.01	0.02	Settable curve parameter, user-programmable curve type.
a	0.01 - 1000.00	-	0.01	0.14	Settable curve parameter, user-programmable curve type.
b	0.01 - 1000.00	-	0.01	1.00	Settable curve parameter, user-programmable curve type.
c	0.01 - 1000.00	-	0.01	1.00	Settable curve parameter, user-programmable curve type.
OpenCTEnable	Disabled Enabled	-	-	Enabled	Open CT detection feature. Open CTEnable Off/On
tOCTAlarmDelay	0.100 - 10.000	s	0.001	1.000	Open CT: time in s to alarm after an open CT is detected
tOCTResetDelay	0.100 - 10.000	s	0.001	0.250	Reset delay in s. After delay, diff. function is activated

Table 41: LT3CPDIF (87LT) Non group settings (basic)

Name	Values (Range)	Unit	Step	Default	Description
NoOfTerminals	2 3	-	-	2	Number of current terminals of the protected circuit
Chan2IsLocal	No Yes	-	-	No	2-nd local current connected to input channel 2, Yes/ No
IBase	50.0 - 9999.9	A	0.1	3000.0	Base (reference) current of the differential protection
ZerSeqCurSubtr	Disabled Enabled	-	-	Disabled	Off/On for elimination of zero seq. from diff. and bias curr
TraAOnInpCh	No Transf A 1 2 3	-	-	No Transf A	Power transformer A applied on input channel X
RatVoltW1TraA	1.0 - 9999.9	kV	0.1	130.0	Transformer A rated voltage (kV) on winding 1 (HV winding)
RatVoltW2TraA	1.0 - 9999.9	kV	0.1	130.0	Transformer A rated voltage (kV) on winding 2 (LV winding)
ClockNumTransA	0 [0 deg] 1 [30 deg lag] 2 [60 deg lag] 3 [90 deg lag] 4 [120 deg lag] 5 [150 deg lag] 6 [180 deg lag] 7 [210 deg lag] 8 [240 deg lag] 9 [270 deg lag] 10 [300 deg lag] 11 [330 deg lag]	-	-	0 [0 deg]	Transf. A phase shift in multiples of 30 deg, 5 for 150 deg
ZerSeqPassTraA	No Yes	-	-	No	Yes/No for capability of transf A to transform zero seq curr
TraBOnInpCh	No Transf B 1 2 3	-	-	No Transf B	Power transformer B applied on input channel X
RatVoltW1TraB	1.0 - 9999.9	kV	0.1	130.0	Transformer B rated voltage (kV) on winding 1 (HV winding)

Table continues on next page

Name	Values (Range)	Unit	Step	Default	Description
RatVoltW2TraB	1.0 - 9999.9	kV	0.1	130.0	Transformer B rated voltage (kV) on winding 2 (LV winding)
ClockNumTransB	0 [0 deg] 1 [30 deg lag] 2 [60 deg lag] 3 [90 deg lag] 4 [120 deg lag] 5 [150 deg lag] 6 [180 deg lag] 7 [210 deg lag] 8 [240 deg lag] 9 [270 deg lag] 10 [300 deg lag] 11 [330 deg lag]	-	-	0 [0 deg]	Transf. B phase shift in multiples of 30 deg, 2 for 60 deg
ZerSeqPassTraB	No Yes	-	-	No	Yes/No for capability of transf B to transform zero seq curr

Table 42: LT6CPDIF (87LT) Group settings (basic)

Name	Values (Range)	Unit	Step	Default	Description
Operation	Disabled Enabled	-	-	Disabled	Disable/Enable Operation
IdMin	0.20 - 2.00	IB	0.01	0.30	Oper - restr charact., section 1 sensitivity, multiple IBase
IdMinHigh	0.20 - 10.00	IB	0.01	0.80	Initial lower sensitivity, as multiple of IBase
tIdMinHigh	0.000 - 60.000	s	0.001	1.000	Time interval of initial lower sensitivity, in sec
IdUnre	1.00 - 50.00	IB	0.01	10.00	Unrestrained differential current limit, multiple of IBase
NegSeqDiffEn	Disabled Enabled	-	-	Enabled	Off/On selection for internal / external fault discriminator
NegSeqROA	30.0 - 120.0	Deg	1.0	60.0	Internal/external fault discriminator Operate Angle, degrees
IMinNegSeq	0.01 - 0.20	IB	0.01	0.04	Min. value of neg. seq. curr. as multiple of IBase
CrossBlockEn	No Yes	-	-	No	Off/On selection of the cross -block logic
I2/I1Ratio	5.0 - 100.0	%	1.0	10.0	Max. ratio of second harmonic to fundamental harm dif. curr. in %
I5/I1Ratio	5.0 - 100.0	%	1.0	25.0	Max. ratio of fifth harmonic to fundamental harm dif. curr. in %
ChargCurEnable	Disabled Enabled	-	-	Disabled	Off/On selection for compensation of charging currents
AddDelay	Disabled Enabled	-	-	Disabled	On/Off selection for delayed diff. trip command
IMaxAddDelay	0.20 - 5.00	IB	0.01	1.00	Below limit, extra delay can be applied, multiple of IBase

Table continues on next page

Name	Values (Range)	Unit	Step	Default	Description
tDefTime	0.000 - 6.000	s	0.001	0.000	Definite time additional delay in seconds
tMinInv	0.001 - 6.000	s	0.001	0.010	Inverse Delay Minimum Time. In seconds
CurveType	ANSI Ext. inv. ANSI Very inv. ANSI Norm. inv. ANSI Mod. inv. ANSI Def. Time L.T.E. inv. L.T.V. inv. L.T. inv. IEC Norm. inv. IEC Very inv. IEC inv. IEC Ext. inv. IEC S.T. inv. IEC L.T. inv. IEC Def. Time Programmable RI type RD type	-	-	IEC Def. Time	19 curve types. Example: 15 for definite time delay.
TD	0.05 - 1.10	-	0.01	1.00	Time Multiplier Setting (TMS) for inverse delays
IdiffAlarm	0.05 - 1.00	IB	0.01	0.15	Sustained differential current alarm, factor of IBase
tAlarmdelay	0.000 - 60.000	s	0.001	10.000	Delay for alarm due to sustained differential current, in s

Table 43: LT6CPDIF (87LT) Group settings (advanced)

Name	Values (Range)	Unit	Step	Default	Description
EndSection1	0.20 - 1.50	IB	0.01	1.25	End of section 1, as multiple of reference current IBase
EndSection2	1.00 - 10.00	IB	0.01	3.00	End of section 2, as multiple of reference current IBase
SlopeSection2	10.0 - 50.0	%	0.1	40.0	Slope in section 2 of operate-restrain characteristic, in %
SlopeSection3	30.0 - 100.0	%	0.1	80.0	Slope in section 3 of operate- restrain characteristic, in %
p	0.01 - 1000.00	-	0.01	0.02	Settable curve parameter, user-programmable curve type.
a	0.01 - 1000.00	-	0.01	0.14	Settable curve parameter, user-programmable curve type.
b	0.01 - 1000.00	-	0.01	1.00	Settable curve parameter, user-programmable curve type.
c	0.01 - 1000.00	-	0.01	1.00	Settable curve parameter, user-programmable curve type.

Table continues on next page

Name	Values (Range)	Unit	Step	Default	Description
OpenCTEnable	Disabled Enabled	-	-	Enabled	Open CTEnable Off/On
tOCTAlarmDelay	0.100 - 10.000	s	0.001	1.000	Open CT: time in s to alarm after an open CT is detected
tOCTResetDelay	0.100 - 10.000	s	0.001	0.250	Reset delay in s. After delay, diff. function is activated

Table 44: LT6CPDIF (87LT) Non group settings (basic)

Name	Values (Range)	Unit	Step	Default	Description
NoOfTerminals	2 3 4 5 6	-	-	2	Number of current terminals of the protected circuit
Chan2IsLocal	No Yes	-	-	No	2-nd local current connected to input channel 2, Yes/ No
IBase	50.0 - 9999.9	A	0.1	3000.0	Base (reference) current of the differential protection
ZerSeqCurSubtr	Disabled Enabled	-	-	Disabled	Off/On for elimination of zero seq. from diff. and bias curr
TraAOnInpCh	No Transf A 1 2 3 4 5 6	-	-	No Transf A	Power transformer A applied on input channel X
RatVoltW1TraA	1.0 - 9999.9	kV	0.1	130.0	Transformer A rated voltage (kV) on winding 1 (HV winding)
RatVoltW2TraA	1.0 - 9999.9	kV	0.1	130.0	Transformer A rated voltage (kV) on winding 2 (LV winding)
ClockNumTransA	0 [0 deg] 1 [30 deg lag] 2 [60 deg lag] 3 [90 deg lag] 4 [120 deg lag] 5 [150 deg lag] 6 [180 deg lag] 7 [210 deg lag] 8 [240 deg lag] 9 [270 deg lag] 10 [300 deg lag] 11 [330 deg lag]	-	-	0 [0 deg]	Transf. A phase shift in multiples of 30 deg, 5 for 150 deg
ZerSeqPassTraA	No Yes	-	-	No	Yes/No for capability of transf A to transform zero seq curr

Table continues on next page

Name	Values (Range)	Unit	Step	Default	Description
TraBOnInpCh	No Transf B 1 2 3 4 5 6	-	-	No Transf B	Power transformer B applied on input channel X
RatVoltW1TraB	1.0 - 9999.9	kV	0.1	130.0	Transformer B rated voltage (kV) on winding 1 (HV winding)
RatVoltW2TraB	1.0 - 9999.9	kV	0.1	130.0	Transformer B rated voltage (kV) on winding 2 (LV winding)
ClockNumTransB	0 [0 deg] 1 [30 deg lag] 2 [60 deg lag] 3 [90 deg lag] 4 [120 deg lag] 5 [150 deg lag] 6 [180 deg lag] 7 [210 deg lag] 8 [240 deg lag] 9 [270 deg lag] 10 [300 deg lag] 11 [330 deg lag]	-	-	0 [0 deg]	Transf. B phase shift in multiples of 30 deg, 2 for 60 deg
ZerSeqPassTraB	No Yes	-	-	No	Yes/No for capability of transf B to transform zero seq curr

Table 45: LDLPDIF (87L) Non group settings (basic)

Name	Values (Range)	Unit	Step	Default	Description
Operation	Disabled Enabled	-	-	Enabled	Disable/Enable Operation
testModeSet	Disabled Enabled	-	-	Disabled	Test mode On/Off
ReleaseLocal	Block all Release local	-	-	Block all	Release of local terminal for trip under test mode

3.5.3 Additional security logic for differential protection STSGGIO (11)

Function description	IEC 61850 identification	IEC 60617 identification	ANSI/IEEE C37.2 device number
Additional security logic for differential protection	STSGGIO	-	11

3.5.3.1 Application

Additional security logic for differential protection STSGGIO (11) can help the security of the protection especially when the communication system is in abnormal status or for example when there is unspecified asymmetry in the communication link. It reduces the probability for mal-operation of the protection. STSGGIO (11) is more sensitive than the main protection logic to always release operation for all faults detected by the differential function. STSGGIO (11) consists of four sub functions:

- Phase-to-phase current variation
- Zero sequence current criterion
- Low voltage criterion
- Low current criterion

Phase-to-phase current variation takes the current samples as input and it calculates the variation using the sampling value based algorithm. Phase-to-phase current variation function is major one to fulfil the objectives of the start up element.

Zero sequence criterion takes the zero sequence current as input. It increases security of protection during the high impedance fault conditions.

Low voltage criterion takes the phase voltages and phase to phase voltages as inputs. It increases the security of protection when the three phase fault occurred on the weak end side.

Low current criterion takes the phase currents as inputs and it increases the dependability during the switch onto fault case of unloaded line.

The differential function can be allowed to trip as no load is fed through the line and protection is not working correctly.

Features:

- Startup element is sensitive enough to detect the abnormal status of the protected system
- Startup element does not influence the operation speed of main protection
- Startup element detects the evolving faults, high impedance faults and three phase fault on weak side
- It is possible to block the each sub function of startup element
- Startup signal has a settable pulse time

The Additional security logic for differential protection STSGGIO (11) is connected as a local criterion to release the tripping from line differential protection. STSGGIO is connected with an AND gate to the trip signals from LDLPDIF function. Figure 52 shows a configuration for three phase tripping, but STSGGIO can be configured with individual release to all phases trip. The BFI_3P signal can also, through one of the

available binary signal transfer channels, be sent to remote end and there connected to input REMSTEP. Normally, the local criterion is sufficient.

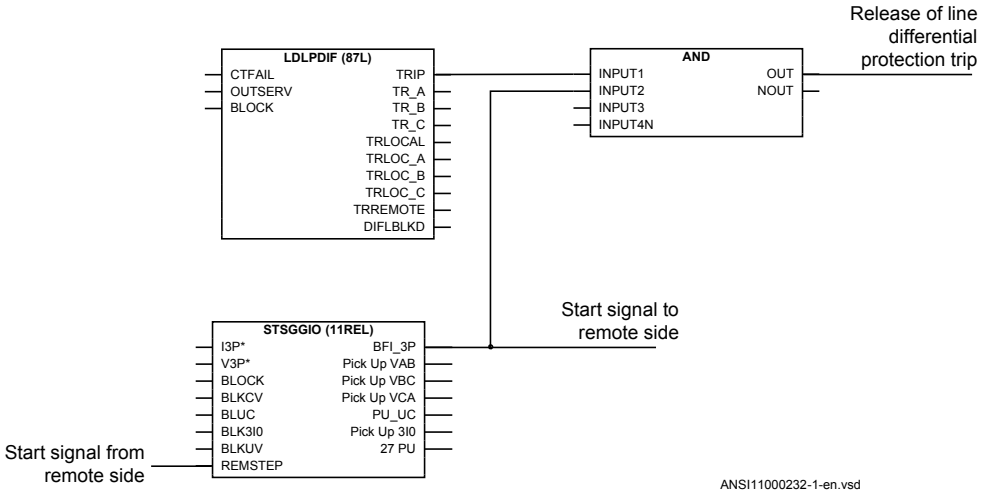

Figure 52: Local release criterion configuration for line differential protection

3.5.3.2 Setting guidelines

IBase: Base phase current in primary A. This current is used as reference for the setting. If it is possible to find a suitable value, the rated current of the protected object is chosen. In line applications the primary rated current of the current transformer is recommended.

VBase: Base phase-to-phase voltage in primary kV. This voltage is used as reference for the setting. If it is possible to find a suitable value, the rated voltage of the protected object is chosen. In line applications the primary rated voltage of the voltage transformer is recommended.

tStUpReset: Reset delay of the startup signal. The default value is recommended.

Settings for phase-phase current variation subfunction are described below.

Enable CV: *Enabled*/*Disabled*, is set *Enabled* in most applications

Pick Up ICV: Level of fixed threshold given in % of *IBase*. This setting should be based on fault calculations to find the current increase in case of a fault at the point on the protected line giving the smallest fault current to the protection. The phase current shall be calculated for different types of faults (single phase-to-ground, phase-to-phase to ground, phase-to-phase and three phase short circuits) at different switching states in the network. In case of switching of large objects (shunt capacitor banks, transformers,

and so on) large change in current can occur. The *Pick Up ICV* setting should ensure that all multi-phase faults are detected.

Time Delay CV: Time delay of zero sequence overcurrent criterion. Default value 0.002 s is recommended

Settings for zero sequence current criterion subfunction are described below.

Enable 3I0: *Enabled*/*Disabled*, is set *Enabled* for detection of phase-to-ground faults with high sensitivity

PU 3I0 : Level of high zero sequence current detection given in % of *IBase*. This setting should be based on fault calculations to find the zero sequence current in case of a fault at the point on the protected line giving the smallest fault current to the protection. The zero sequence current shall be calculated for different types of faults (single phase-to-groundand phase to phase to ground) at different switching states in the network.

t3I0: Time delay of zero sequence overcurrent criterion. Default value 0.0 s is recommended

Setting for low voltage criterion subfunction are described below.

OperationUV: *Enabled*/*Disabled*, is set *Enabled* for detection of faults by means of low phase-to-ground or phase-to-phase voltage

V_Ph-N: Level of low phase-ground voltage detection, given in % of *VBase*. This setting should be based on fault calculations to find the phase-ground voltage decrease in case of a fault at the most remote point where the differential protection shall be active. The phase-ground voltages shall be calculated for different types of faults (single phase-to-ground and phase to phase to ground) at different switching states in the network. The setting must be higher than the lowest phase-ground voltage during non-faulted operation.

V_Ph-Ph: Level of low phase-phase voltage detection, given in % of *VBase*. This setting should be based on fault calculations to find the phase-phase voltage decrease in case of a fault at the most remote point where the differential protection shall be active. The phase-pahse voltages shall be calculated for different types of faults (single phase to ground and phase to phase to ground) at different switching states in the network. The setting must be higher than the lowest phase-phase voltage during non-faulted operation.

tUV: Time delay of undervoltage criterion. Default value 0.0 s is recommended

Settings for low current criterion subfunction are described below.

Operation37: *Enabled*/*Disabled*, is set *Enabled* when tripping is preferred at energizing of the line if differential does not behave correctly.

PU_37: Level of low phase current detection given in % of *IBase*. This setting shall detect open line ends and be below normal minimum load.

tUC: Time delay of undercurrent criterion. Default value is recommended to verify that the line is open.

3.5.3.3 Setting parameters

Table 46: STSGGIO (11REL) Group settings (basic)

Name	Values (Range)	Unit	Step	Default	Description
Operation	Disabled Enabled	-	-	Disabled	Operation Off/On
IBase	1 - 99999	A	1	3000	Base setting for current in A
VBase	0.05 - 2000.00	kV	0.05	400	Base setting for voltage in kV
tStUpReset	0.000 - 60.000	s	0.001	7.000	Reset delay for startup signal
Enable CV	Disabled Enabled	-	-	Enabled	Disable/Enable current variation operation
Pick Up ICV	1 - 100	%IB	1	20	Fixed threshold for ph to ph current variation criterion
Operation37	Disabled Enabled	-	-	Enabled	Disable/Enable low current criterion
PU_37	0 - 100	%IB	1	5	Pickup for low current in % of IBase
Enable 3I0	Disabled Enabled	-	-	Enabled	Disable/Enable zero sequence current criterion
PU 3I0	1 - 100	%IB	1	10	Pickup zero sequence current criterion in % of IBase
OperationUV	Disabled Enabled	-	-	Enabled	Disable/Enable under voltage criterion
V_Ph-N	1 - 100	%VB	1	60	Pickup phase voltage criterion in % of VBase
V_Ph-Ph	1 - 100	%VB	1	60	Pickup ph to ph voltage criterion in % of VBase

Table 47: STSGGIO (11REL) Group settings (advanced)

Name	Values (Range)	Unit	Step	Default	Description
Time Delay CV	0.000 - 0.005	s	0.001	0.002	Time delay for phase to phase current variation
tUC	0.000 - 60.000	s	0.001	0.200	Time delay for low current criterion
t3I0	0.000 - 60.000	s	0.001	0.000	Time delay for zero sequence current criterion
tUV	0.000 - 60.000	s	0.001	0.000	Time delay for low voltage criterion
HysAbsUV	0.0 - 100.0	%VB	0.1	0.5	Hysteresis absolute value for low voltage criterion in % of UBase

3.6 Impedance protection

3.6.1 Distance measuring zones, quadrilateral characteristic ZMQPDIS (21), ZMQAPDIS (21), ZDRDIR (21D)

3.6.1.1 Identification

Function description	IEC 61850 identification	IEC 60617 identification	ANSI/IEEE C37.2 device number
Distance protection zone, quadrilateral characteristic (zone 1)	ZMQPDIS	Z <	21
Distance protection zone, quadrilateral characteristic (zone 2-5)	ZMQAPDIS	Z <	21
Directional impedance quadrilateral	ZDRDIR	Z<->	21D

3.6.1.2 Application

Sub-transmission networks are being extended and often become more and more complex, consisting of a high number of multi-circuit and/or multi terminal lines of very different lengths. These changes in the network will normally impose more stringent demands on the fault clearing equipment in order to maintain an unchanged or increased security level of the power system.

The distance protection function in the IED is designed to meet basic requirements for application on transmission and sub-transmission lines (solid grounded systems) although it also can be used on distribution levels.

System grounding

The type of system grounding plays an important role when designing the protection system. Some hints with respect to distance protection are highlighted below.

Solidly grounded networks

In solidly grounded systems, the transformer neutrals are connected directly to ground without any impedance between the transformer neutral and ground.

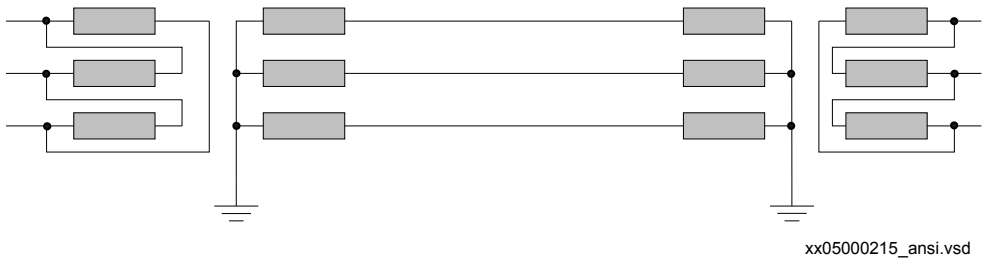

Figure 53: Solidly grounded network

The ground-fault current is as high or even higher than the short-circuit current. The series impedances determine the magnitude of the fault current. The shunt admittance has very limited influence on the ground-fault current. The shunt admittance may, however, have some marginal influence on the ground-fault current in networks with long transmission lines.

The ground-fault current at single phase-to-ground in phase A can be calculated as equation 46:

$$3I_0 = \frac{3 \cdot V_A}{Z_1 + Z_2 + Z_0 + 3Z_f} = \frac{V_A}{Z_1 + Z_N + Z_f}$$

(Equation 46)

Where:

VA	is the phase-to-ground voltage (kV) in the faulty phase before fault
Z_1	is the positive sequence impedance (Ω/phase)
Z_2	is the negative sequence impedance (Ω/phase)
Z_0	is the zero sequence impedance (Ω/phase)
Z_f	is the fault impedance (Ω), often resistive
Z_N	is the ground-return impedance defined as $(Z_0-Z_1)/3$

The voltage on the healthy phases is generally lower than 140% of the nominal phase-to-ground voltage. This corresponds to about 80% of the nominal phase-to-phase voltage.

The high zero-sequence current in solidly grounded networks makes it possible to use impedance measuring techniques to detect ground faults. However, distance protection has limited possibilities to detect high resistance faults and should therefore always be complemented with other protection function(s) that can carry out the fault clearance in those cases.

Effectively grounded networks

A network is defined as effectively grounded if the ground-fault factor f_e is less than 1.4. The ground-fault factor is defined according to equation 47.

$$f_e = \left| \frac{V_{max}}{V_{pn}} \right|$$

(Equation 47)

Where:

V_{max}	is the highest fundamental frequency voltage on one of the healthy phases at single phase-to-ground fault.
V_{pn}	is the phase-to-ground fundamental frequency voltage before fault.

Another definition for effectively grounded network is when the following relationships between the symmetrical components of the network impedances are valid, see equation 48 and equation 49.

$$X_0 < 3 \cdot X_1$$

(Equation 48)

$$R_0 \leq R_1$$

(Equation 49)

Where

R_0	is setting of the resistive zero sequence reach
X_0	is setting of the reactive zero sequence reach
R_1	is setting of the resistive positive sequence reach
X_1	is setting of the reactive positive sequence reach

The magnitude of the ground-fault current in effectively grounded networks is high enough for impedance measuring elements to detect ground faults. However, in the same way as for solidlygrounded networks, distance protection has limited possibilities to detect high resistance faults and should therefore always be complemented with other protection function(s) that can carry out the fault clearance in this case.

High impedance grounded networks

In high impedance networks, the neutral of the system transformers are connected to the ground through high impedance, mostly a reactance in parallel with a high resistor.

This type of network is many times operated in radial, but can also be found operating meshed networks.

What is typical for this type of network is that the magnitude of the ground-fault current is very low compared to the short circuit current. The voltage on the healthy phases will get a magnitude of √3 times the phase voltage during the fault. The zero sequence voltage ($3V_0$) will have the same magnitude in different places in the network due to low voltage drop distribution.

The magnitude of the total fault current can be calculated according to equation 50.

$$3I_0 = \sqrt{I_R^2 + \left(I_L - I_C\right)^2}$$

(Equation 50)

Where:

$3I_0$	is the ground-fault current (A)
IR	is the current through the neutral point resistor (A)
IL	is the current through the neutral point reactor (A)
IC	is the total capacitive ground-fault current (A)

The neutral point reactor is normally designed so that it can be tuned to a position where the reactive current balances the capacitive current from the network that is:

$$\omega L = \frac{1}{3 \cdot \omega \cdot C}$$

(Equation 51)

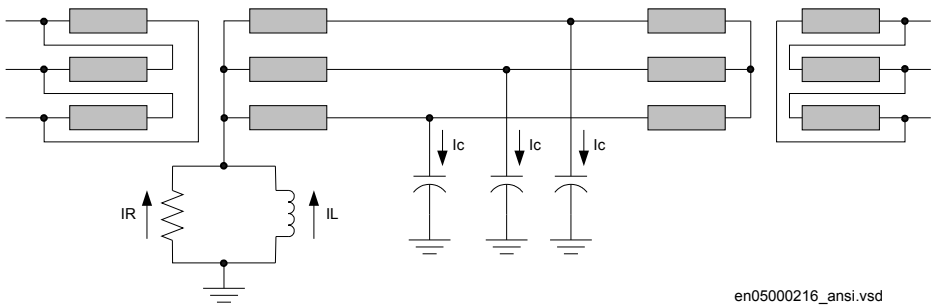

Figure 54: High impedance grounded network

The operation of high impedance grounded networks is different compared to solid grounded networks where all major faults have to be cleared very fast. In high impedance grounded networks, some system operators do not clear single phase-to-

ground faults immediately; they clear the line later when it is more convenient. In case of cross-country faults, many network operators want to selectively clear one of the two ground faults. To handle this type of phenomenon, a separate function called Phase preference logic (PPLPHIZ) is needed in medium and subtransmission network.

In this type of network, it is mostly not possible to use distance protection for detection and clearance of ground faults. The low magnitude of the ground-fault current might not give pickup of the zero-sequence measurement elements or the sensitivity will be too low for acceptance. For this reason a separate high sensitive ground-fault protection is necessary to carry out the fault clearance for single phase-to-ground fault.

Fault infeed from remote end

All transmission and most all sub-transmission networks are operated meshed. Typical for this type of network is that fault infeed from remote end will happen when fault occurs on the protected line. The fault current infeed will enlarge the fault impedance seen by the distance protection. This effect is very important to keep in mind when both planning the protection system and making the settings.

With reference to figure 55, the equation for the bus voltage V_A at A side is:

$$\overline{V}_A = \overline{I}_A \cdot p \cdot Z_L + (\overline{I}_A + \overline{I}_B) \cdot R_f$$

(Equation 52)

If we divide V_A by I_A we get Z present to the IED at A side.

$$\overline{Z}_A = \frac{\overline{V}_a}{\overline{I}_A} = p \cdot \overline{Z}_L + \frac{\overline{I}_A + \overline{I}_B}{\overline{I}_A} \cdot R_f$$

(Equation 53)

The infeed factor $(I_A+I_B)/I_A$ can be very high, 10-20 depending on the differences in source impedances at local and remote end.

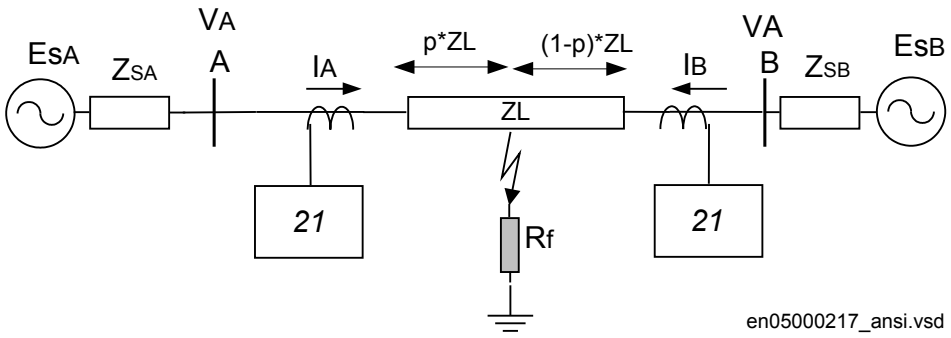

Figure 55: Influence of fault current infeed from remote line end

The effect of fault current infeed from remote line end is one of the most driving factors for justify complementary protection to distance protection.

When the line is heavily loaded, the distance protection at the exporting end will have a tendency to overreach. To handle this phenomenon, the IED has an adaptive built-in algorithm, which compensates the overreach tendency of zone 1, at the exporting end. No settings are required for this function.

Load encroachment

In some cases the load impedance might enter the zone characteristic without any fault on the protected line. The phenomenon is called load encroachment and it might occur when an external fault is cleared and high emergency load is transferred on the protected line. The effect of load encroachment is illustrated to the left in figure 56. The entrance of the load impedance inside the characteristic is of course not allowed and the way to handle this with conventional distance protection is to consider this with the settings, that is, to have a security margin between the distance zone and the minimum load impedance. This has the drawback that it will reduce the sensitivity of the protection, that is, the ability to detect resistive faults.

In some cases the load impedance might enter the zone characteristic without any fault on the protected line. The phenomenon is called load encroachment and it might occur when an external fault is cleared and high emergency load is transferred on the protected line. The effect of load encroachment is illustrated to the left in figure 56 and figure 122. The entrance of the load impedance inside the characteristic is of course not allowed and the way to handle this with conventional distance protection is to consider this with the settings, that is, to have a security margin between the distance zone and the minimum load impedance. This has the drawback that it will reduce the sensitivity of the protection, that is, the ability to detect resistive faults.

The IED has a built in function which shapes the characteristic according to the right figure of figure 56. The load encroachment algorithm will increase the possibility to detect high fault resistances, especially for phase-to-ground faults at remote line end. For example, for a given setting of the load angle *LdAngle* for Phase selection with

load encroachment, quadrilateral characteristic function (FDPSPDIS, 21), the resistive blinder for the zone measurement can be expanded according to the figure 56 given higher fault resistance coverage without risk for unwanted operation due to load encroachment. This is valid in both directions.

The use of the load encroachment feature is essential for long heavily loaded lines, where there might be a conflict between the necessary emergency load transfer and necessary sensitivity of the distance protection. The function can also preferably be used on heavy loaded medium long lines. For short lines, the major concern is to get sufficient fault resistance coverage. Load encroachment is not a major problem. So, for short lines, the load encroachment function could preferably be switched off. See section "Load impedance limitation, without load encroachment function".

The settings of the parameters for load encroachment are done in FDPSPDIS (21) function.

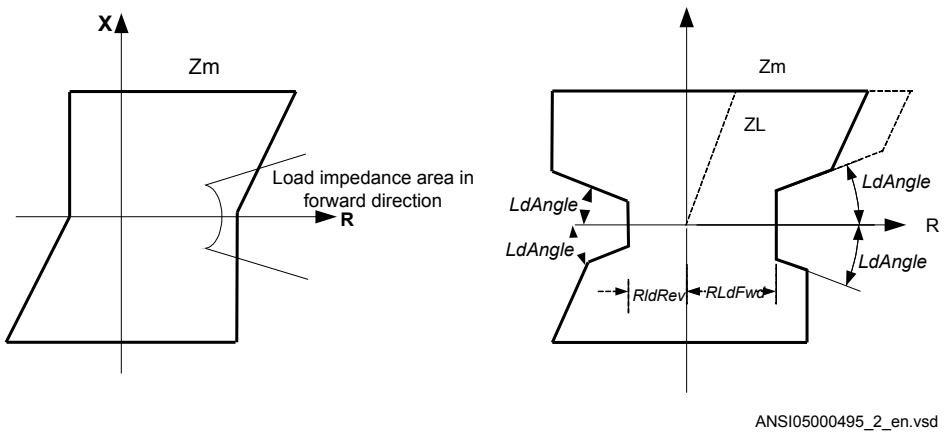

Figure 56: Load encroachment phenomena and shaped load encroachment characteristic defined in Phase selection with load encroachment function FDPSPDIS (21)

Short line application

Transmission line lengths for protection application purposes are classified as short, medium and long. The definition of short, medium and long lines is found in IEEE Std C37.113-1999.). The length classification is defined by the ratio of the source impedance at the protected line's terminal to the protected line's impedance (SIR). SIR's of about 4 or greater generally define a short line. Medium lines are those with SIR's greater than 0.5 and less than 4

In short line applications, the major concern is to get sufficient fault resistance coverage. Load encroachment is not so common. The line length that can be

recognized as a short line is not a fixed length; it depends on system parameters such as voltage and source impedance, see table 48.

Table 48: Definition of short and very short line

Line category	Vn 110 kV	Vn 500 kV
Very short line	0.75 -3.5mile	3-15 miles
Short line	4-7 miles	15-30 miles

The IED's ability to set resistive and reactive reach independent for positive and zero sequence fault loops and individual fault resistance settings for phase-to-phase and phase-to-ground fault together with load encroachment algorithm improves the possibility to detect high resistive faults without conflict with the load impedance, see figure 56.

For very short line applications, the underreaching zone 1 can not be used due to the voltage drop distribution throughout the line will be too low causing risk for overreaching. It is difficult, if not impossible, to apply distance protection for short lines. It is possible to apply an overreaching pilot communication based POTT or Blocking scheme protection for such lines to have fast tripping along the entire line. Usually a unit protection, based on comparison of currents at the ends of the lines is applied for such lines.

Load encroachment is normally no problem for short line applications.

Long transmission line application

For long transmission lines, the margin to the load impedance, that is, to avoid load encroachment, will normally be a major concern. It is well known that it is difficult to achieve high sensitivity for phase-to-ground fault at remote line end of long lines when the line is heavy loaded.

What can be recognized as long lines with respect to the performance of distance protection can generally be described as in table 49, long lines have Source impedance ratio (SIR’s) less than 0.5.

Table 49: Definition of long and very long lines

Line category	Vn 110 kV	Vn 500 kV
Long lines	45-60 miles	200-250 miles
Very long lines	>60 miles	>250 miles

The IED's ability to set resistive and reactive reach independent for positive and zero sequence fault loops and individual fault resistance settings for phase-to-phase and phase-to-ground fault together with load encroachment algorithm improves the possibility to

detect high resistive faults at the same time as the security is improved (risk for unwanted trip due to load encroachment is eliminated), see figure 57.

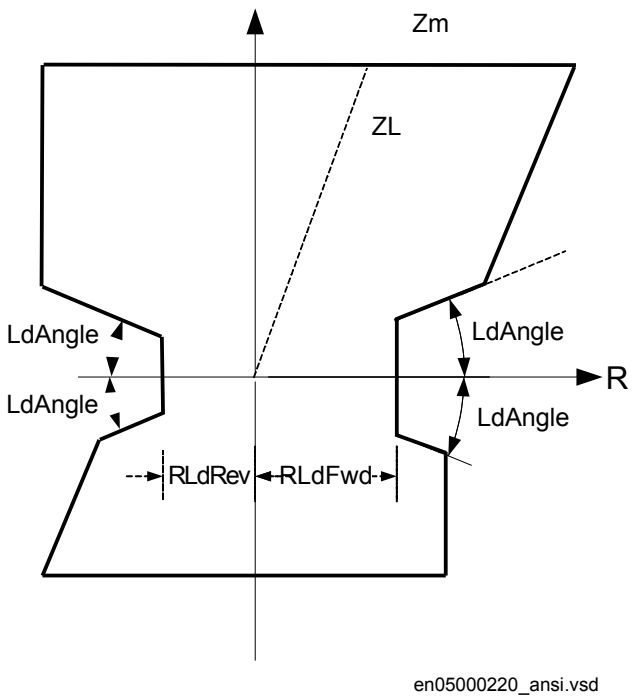

Figure 57: Characteristic for zone measurement for a long line

Parallel line application with mutual coupling

General

Introduction of parallel lines in the network is increasing due to difficulties to get necessary area for new lines.

Parallel lines introduce an error in the measurement due to the mutual coupling between the parallel lines. The lines need not be of the same voltage in order to experience mutual coupling, and some coupling exists even for lines that are separated by 100 meters or more. The mutual coupling does influence the zero sequence impedance to the fault point but it does not normally cause voltage inversion.

It can be shown from analytical calculations of line impedances that the mutual impedances for positive and negative sequence are very small (< 1-2%) of the self impedance and it is a practice to neglect them.

From an application point of view there exists three types of network configurations (classes) that must be considered when making the settings for the protection function.

The different network configuration classes are:

1. Parallel line with common positive and zero sequence network
2. Parallel circuits with common positive but isolated zero sequence network
3. Parallel circuits with positive and zero sequence sources isolated.

One example of class 3 networks could be the mutual coupling between a 400kV line and rail road overhead lines. This type of mutual coupling is not so common although it exists and is not treated any further in this manual.

For each type of network class, there are three different topologies; the parallel line can be in service, out of service, out of service and grounded in both ends.

The reach of the distance protection zone 1 will be different depending on the operation condition of the parallel line. This can be handled by the use of different setting groups for handling the cases when the parallel line is in operation and out of service and grounded at both ends.

The distance protection within the IED can compensate for the influence of a zero sequence mutual coupling on the measurement at single phase-to-ground faults in the following ways, by using:

- The possibility of different setting values that influence the ground-return compensation for different distance zones within the same group of setting parameters.
- Different groups of setting parameters for different operating conditions of a protected multi circuit line.

Most multi circuit lines have two parallel operating circuits.

Parallel line applications

This type of networks is defined as those networks where the parallel transmission lines terminate at common nodes at both ends.

The three most common operation modes are:

1. Parallel line in service.
2. Parallel line out of service and grounded.
3. Parallel line out of service and not grounded.

Parallel line in service

This type of application is very common and applies to all normal sub-transmission and transmission networks.

Let us analyze what happens when a fault occurs on the parallel line see figure 58.

From symmetrical components, we can derive the impedance Z at the relay point for normal lines without mutual coupling according to equation 54.

$$\overline{Z} = \frac{\overline{V}_{ph}}{\overline{I}_{ph} + 3\overline{I}_0 \cdot \frac{\overline{Z}_0 - \overline{Z}_1}{3 \cdot \overline{Z}_1}} = \frac{\overline{V}_{ph}}{\overline{I}_{ph} + 3I_0 \cdot \overline{K}_N}$$

(Equation 54)

Where:

Vph	is phase to ground voltage at the relay point
Iph	is phase current in the faulty phase
3I0	is ground fault current
Z1	is positive sequence impedance
Z0	is zero sequence impedance

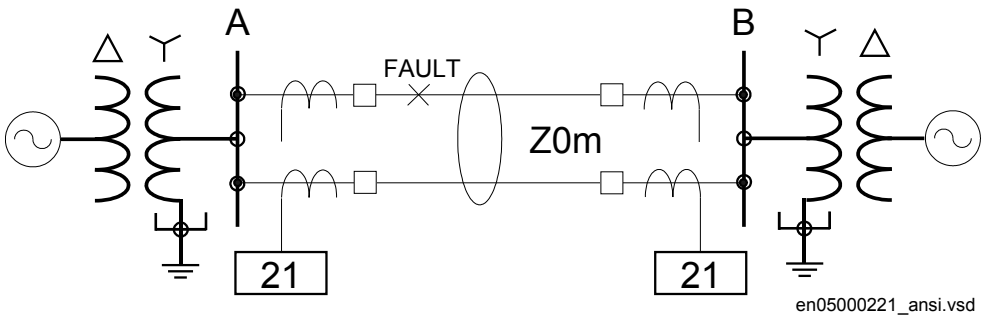

Figure 58: Class 1, parallel line in service

The equivalent circuit of the lines can be simplified, see figure 59.

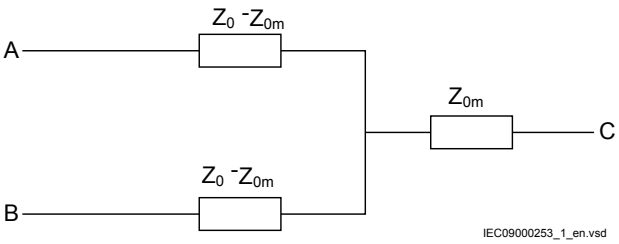

Figure 59: Equivalent zero sequence impedance circuit of the double-circuit, parallel, operating line with a single phase-to-ground fault at the remote busbar

When mutual coupling is introduced, the voltage at the relay point A will be changed according to equation 55.

$$V_{ph} = \overline{Z}1_L \cdot \left(\overline{I}_{ph} + 3\overline{I}_0 \cdot \frac{\overline{Z}0_L - \overline{Z}1_L}{3 \cdot \overline{Z}1_L} \cdot 3\overline{I}_{0p} \frac{\overline{Z}0_m}{3 \cdot \overline{Z}1_L} \right)$$

(Equation 55)

By dividing equation 55 by equation 54 and after some simplification we can write the impedance present to the relay at A side as:

$$Z = \overline{Z}_t \left(1 + \frac{3\overline{I}0 \cdot \overline{K}Nm}{\overline{I}ph + 3\overline{I}0 \cdot \overline{K}N} \right)$$

(Equation 56)

Where:

KNm = Z0m/(3 · Z1L)

The second part in the parentheses is the error introduced to the measurement of the line impedance.

If the current on the parallel line has negative sign compared to the current on the protected line, that is, the current on the parallel line has an opposite direction compared to the current on the protected line, the distance function will overreach. If the currents have the same direction, the distance protection will underreach.

Maximum overreach will occur if the fault current infeed from remote line end is weak. If considering a single phase-to-ground fault at 'p' unit of the line length from A to B on the parallel line for the case when the fault current infeed from remote line end is zero, the voltage V_A in the faulty phase at A side as in equation 57.

$$V_A = p \cdot Z1_L \left(I_{ph} + K_N \cdot 3I_0 + K_{Nm} \cdot 3I_{0p} \right)$$

(Equation 57)

One can also notice that the following relationship exists between the zero sequence currents:

$$3I_0 \cdot Z0_L = 3I0p \cdot Z0_L \left(2 - p \right)$$

(Equation 58)

Simplification of equation 58, solving it for 3I0p and substitution of the result into equation 57 gives that the voltage can be drawn as:

$$V_A = p \cdot Z1_L \left(Iph + K_N \cdot 3I0 + KN_m \cdot \frac{3I0 \cdot p}{2 - p} \right)$$

(Equation 59)

If we finally divide equation 59 with equation 54 we can draw the impedance present to the IED as

$$Z = p \cdot Z1_L \left[\frac{\left(Iph + KN \cdot 3I0 + KN_m \cdot \frac{3I_0 \cdot p}{2 - p} \right)}{Iph + 3I_0 \cdot KN} \right]$$

(Equation 60)

Calculation for a 400 kV line, where we for simplicity have excluded the resistance, gives with X1L=0.48 Ohm/Mile, X0L=1.4Ohms/Mile, zone 1 reach is set to 90% of the line reactance p=71% that is, the protection is underreaching with approximately 20%.

The zero sequence mutual coupling can reduce the reach of distance protection on the protected circuit when the parallel line is in normal operation. The reduction of the reach is most pronounced with no current infeed in the IED closest to the fault. This reach reduction is normally less than 15%. But when the reach is reduced at one line end, it is proportionally increased at the opposite line end. So this 15% reach reduction does not significantly affect the operation of a permissive underreaching scheme.

Parallel line out of service and grounded

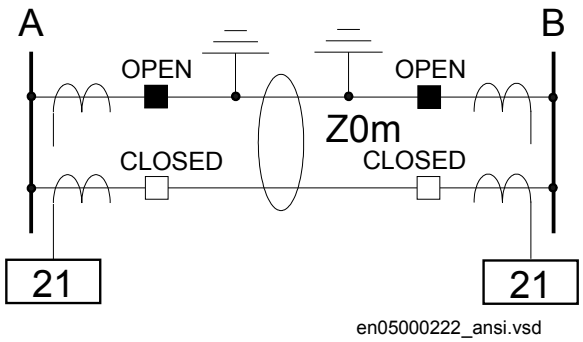

Figure 60: The parallel line is out of service and grounded

When the parallel line is out of service and grounded at both line ends on the bus bar side of the line CTs so that zero sequence current can flow on the parallel line, the equivalent zero sequence circuit of the parallel lines will be according to figure 61.

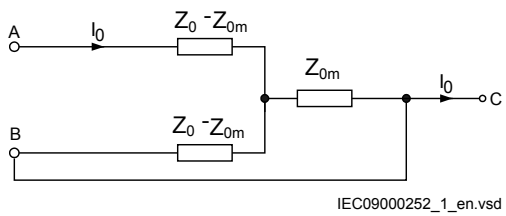

Figure 61: Equivalent zero sequence impedance circuit for the double-circuit line that operates with one circuit disconnected and grounded at both ends

Here the equivalent zero-sequence impedance is equal to Z_0-Z_0m in series with parallel of (Z_0-Z_{0m}) and Z_{0m} which is equal to equation 61.

$$\overline{Z}_E = \frac{\overline{Z}_0^2 - \overline{Z}_{om}^2}{\overline{Z}_0}$$

(Equation 61)

The influence on the distance measurement will be a considerable overreach, which must be considered when calculating the settings.

All expressions below are proposed for practical use. They assume the value of zero sequence, mutual resistance R_{0m} equals to zero. They consider only the zero sequence, mutual reactance X_{0m}. Calculate the equivalent X_{0E} and R_{0E} zero sequence parameters according to equation 62 and equation 63 for each particular line section and use them for calculating the reach for the underreaching zone.

$$R_{0E} = R_0 \bullet \left(1 + \frac{X_{0m}^{\ 2}}{R_0^2 + X_0^2}\right)$$

(Equation 62)

$$X_{0E} = X_0 \bullet \left(1 - \frac{X_{0m}^{\ 2}}{R_0^2 + X_0^2}\right)$$

(Equation 63)

Parallel line out of service and not grounded

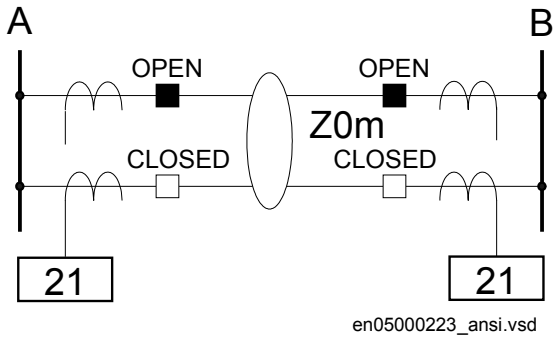

Figure 62: Parallel line is out of service and not grounded

When the parallel line is out of service and not grounded, the zero sequence on that line can only flow through the line admittance to the ground. The line admittance is high which limits the zero-sequence current on the parallel line to very low values. In practice, the equivalent zero-sequence impedance circuit for faults at the remote bus bar can be simplified to the circuit shown in figure 62

The line zero sequence mutual impedance does not influence the measurement of the distance protection in a faulty circuit. This means that the reach of the underreaching distance protection zone is reduced if, due to operating conditions, the equivalent zero sequence impedance is set according to the conditions when the parallel system is out of operation and grounded at both ends.

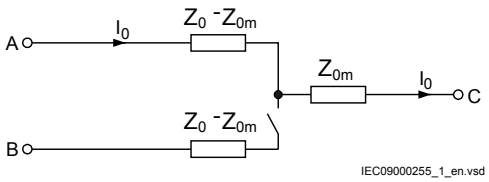

Figure 63: Equivalent zero-sequence impedance circuit for a double-circuit line with one circuit disconnected and not grounded

The reduction of the reach is equal to equation 64.

$$\overline{K}_U = \frac{\frac{1}{3}\cdot\left(2\cdot\overline{Z}_1 + \overline{Z}_{0E}\right) + R_f}{\frac{1}{3}\cdot\left(2\cdot\overline{Z}_1 + \overline{Z}_0\right) + R_f} = 1 - \frac{\overline{Z}_{m0}^{\,2}}{\overline{Z}_0\cdot\left(2\cdot\overline{Z}_1 + \overline{Z}_0 + 3R_f\right)}$$

(Equation 64)

This means that the reach is reduced in reactive and resistive directions. If the real and imaginary components of the constant A are equal to equation 65 and equation 66.

$$\mathrm{Re}(\overline{A}) = R0 \cdot (2 \cdot R1 + R0 + 3 \cdot Rf) - X0 \cdot (X0 + 2 \cdot X1)$$

(Equation 65)

$$\mathrm{Im}(\overline{A}) = X_0 \cdot (2 \cdot R_1 + R_0 + 3 \cdot R_1) + R_0 \cdot (2 \cdot X_1 + X_0)$$

(Equation 66)

The real component of the KU factor is equal to equation 67.

$$\mathrm{Re}\left(\overline{K}_U\right) = 1 + \frac{\mathrm{Re}\left(\overline{A}\right) \cdot X_{m0}{}^2}{\left[\mathrm{Re}\left(\overline{A}\right)\right]^2 + \left[\mathrm{Im}\left(\overline{A}\right)\right]^2}$$

(Equation 67)

The imaginary component of the same factor is equal to equation 68.

$$\mathrm{Im}\left(\overline{K}_U\right) = \frac{\mathrm{Im}\left(\overline{A}\right) \cdot X_{m0}{}^2}{\left[\mathrm{Re}\left(\overline{A}\right)\right]^2 + \left[\mathrm{Im}\left(\overline{A}\right)\right]^2}$$

(Equation 68)

Ensure that the underreaching zones from both line ends will overlap a sufficient amount (at least 10%) in the middle of the protected circuit.

Tapped line application

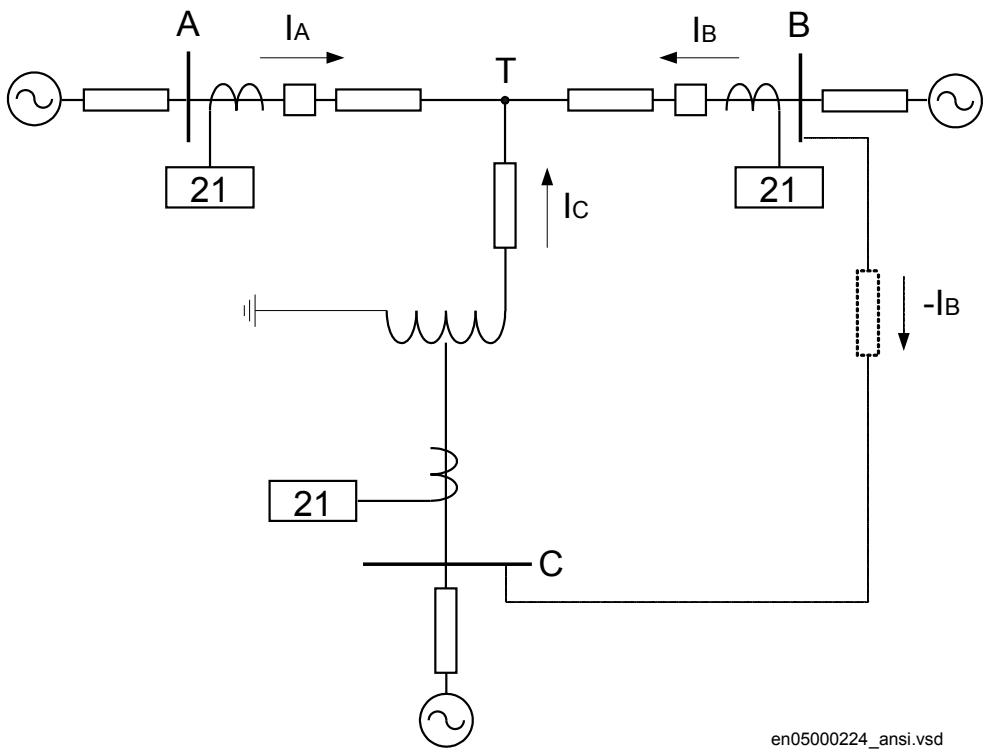

Figure 64: Example of tapped line with Auto transformer

This application gives rise to similar problem that was highlighted in section "Fault infeed from remote end" , that is increased measured impedance due to fault current infeed. For example, for faults between the T point and B station the measured impedance at A and C will be

$$\bar{Z}_A = \bar{Z}_{AT} + \frac{\bar{I}_A + \bar{I}_C}{\bar{I}_A} \cdot \bar{Z}_{TF}$$

(Equation 69)

$$\bar{Z}_C = \bar{Z}_{Trf} + (\bar{Z}_{CT} + \frac{\dot{I}_A + \dot{I}_C}{\dot{I}_C} \cdot \bar{Z}_{TB}) \cdot (\frac{V2}{V1})^2$$

(Equation 70)

Where:

Z_{AT} and Z_{CT}	is the line impedance from the A respective C station to the T point.
I_A and I_C	is fault current from A respective C station for fault between T and B.

Table continues on next page

V2/V1	Transformation ratio for transformation of impedance at V1 side of the transformer to the measuring side V2 (it is assumed that current and voltage distance function is taken from V2 side of the transformer).
Z_{TF}	is the line impedance from the T point to the fault (F).
Z_{Trf}	Transformer impedance

For this example with a fault between T and B, the measured impedance from the T point to the fault will be increased by a factor defined as the sum of the currents from T point to the fault divided by the IED current. For the IED at C, the impedance on the high voltage side V1 has to be transferred to the measuring voltage level by the transformer ratio.

Another complication that might occur depending on the topology is that the current from one end can have a reverse direction for fault on the protected line. For example, for faults at T the current from B might go in reverse direction from B to C depending on the system parameters (see the dotted line in figure 64), given that the distance protection in B to T will measure wrong direction.

In three-end application, depending on the source impedance behind the IEDs, the impedances of the protected object and the fault location, it might be necessary to accept zone 2 trip in one end or sequential trip in one end.

Generally for this type of application it is difficult to select settings of zone 1 that both gives overlapping of the zones with enough sensitivity without interference with other zone 1 settings, that is, without selectivity conflicts. Careful fault calculations are necessary to determine suitable settings and selection of proper scheme communication.

Fault resistance

The performance of distance protection for single phase-to-ground faults is very important, because normally more than 70% of the faults on transmission lines are single phase-to-ground faults. At these faults, the fault resistance is composed of three parts: arc resistance, resistance of a tower construction, and tower-footing resistance. The arc resistance can be calculated according to Warrington's formula:

$$Rarc = \frac{28707 \cdot L}{I^{1.4}}$$

(Equation 71)

where:

L	represents the length of the arc (in meters). This equation applies for the distance protection zone 1. Consider approximately three times arc foot spacing for the zone 2 and wind speed of approximately 30 m/h
I	is the actual fault current in A.

In practice, the setting of fault resistance for both phase-to-ground *RFPE* and phase-to-phase *RFPP* should be as high as possible without interfering with the load impedance in order to obtain reliable fault detection.

3.6.1.3 Setting guidelines

General

The settings for Distance measuring zones, quadrilateral characteristic (ZMQPDIS, 21) are done in primary values. The instrument transformer ratio that has been set for the analog input card is used to automatically convert the measured secondary input signals to primary values used in ZMQPDIS (21).

The following basics must be considered, depending on application, when doing the setting calculations:

- Errors introduced by current and voltage instrument transformers, particularly under transient conditions.
- Inaccuracies in the line zero-sequence impedance data, and their effect on the calculated value of the ground-return compensation factor.
- The effect of infeed between the IED and the fault location, including the influence of different Z_0/Z_1 ratios of the various sources.
- The phase impedance of non transposed lines is not identical for all fault loops. The difference between the impedances for different phase-to-ground loops can be as large as 5-10% of the total line impedance.
- The effect of a load transfer between the IEDs of the protected fault resistance is considerable, the effect must be recognized.
- Zero-sequence mutual coupling from parallel lines.

Setting of zone 1

The different errors mentioned earlier usually require a limitation of the underreaching zone (normally zone 1) to 75 - 90% of the protected line.

In case of parallel lines, consider the influence of the mutual coupling according to section "Parallel line application with mutual coupling" and select the case(s) that are valid in the particular application. By proper setting it is possible to compensate for the cases when the parallel line is in operation, out of service and not grounded and out of service and grounded in both ends. The setting of ground-fault reach should be selected to be <95% also when parallel line is out of service and grounded at both ends (worst case).

Setting of overreaching zone

The first overreaching zone (normally zone 2) must detect faults on the whole protected line. Considering the different errors that might influence the measurement in the same way as for zone 1, it is necessary to increase the reach of the overreaching

zone to at least 120% of the protected line. The zone 2 reach can be even higher if the fault infeed from adjacent lines at remote end is considerable higher than the fault current at the IED location.

The setting shall generally not exceed 80% of the following impedances:

- The impedance corresponding to the protected line, plus the first zone reach of the shortest adjacent line.
- The impedance corresponding to the protected line, plus the impedance of the maximum number of transformers operating in parallel on the bus at the remote end of the protected line.

Larger overreach than the mentioned 80% can often be acceptable due to fault current infeed from other lines. This requires however analysis by means of fault calculations.

If any of the above gives a zone 2 reach less than 120%, the time delay of zone 2 must be increased by approximately 200ms to avoid unwanted operation in cases when the telecommunication for the short adjacent line at remote end is down during faults. The zone 2 must not be reduced below 120% of the protected line section. The whole line must be covered under all conditions.

The requirement that the zone 2 shall not reach more than 80% of the shortest adjacent line at remote end is highlighted in the example below.

If a fault occurs at point F see figure 65, the IED at point A senses the impedance:

$$\overline{Z}_{AF} = \overline{Z}_{AC} + \frac{\overline{I}_A + \overline{I}_B}{\overline{I}_A} \cdot \overline{Z}_{CF} = \overline{Z}_{AC} + \left(1 + \frac{\overline{I}_B}{\overline{I}_A}\right) \cdot \overline{Z}_{CF}$$

(Equation 72)

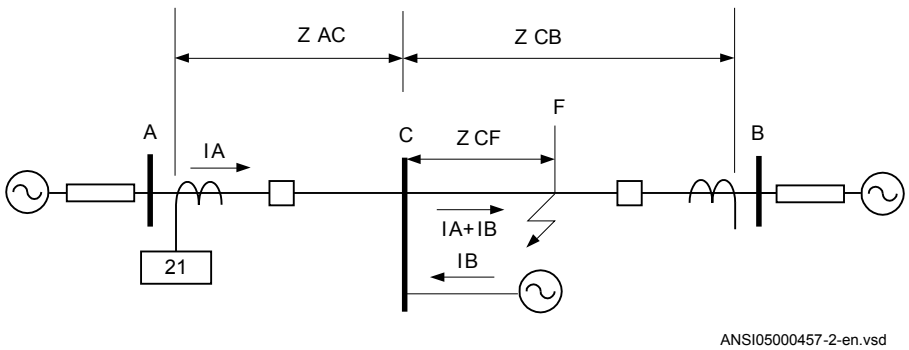

Figure 65: Setting of overreaching zone

Setting of reverse zone

The reverse zone is applicable for purposes of scheme communication logic, current reversal logic, weak-end infeed logic, and so on. The same applies to the back-up protection of the bus bar or power transformers. It is necessary to secure, that it always covers the overreaching zone, used at the remote line IED for the telecommunication purposes.

Consider the possible enlarging factor that might exist due to fault infeed from adjacent lines. Equation 73 can be used to calculate the reach in reverse direction when the zone is used for blocking scheme, weak-end infeed, and so on.

$$Zrev \geq 1.2 \cdot \left| ZL\text{-}Z2rem \right|$$

(Equation 73)

Where:

ZL is the protected line impedance

Z2rem is zone 2 setting at remote end of protected line.

In many applications it might be necessary to consider the enlarging factor due to fault current infeed from adjacent lines in the reverse direction in order to obtain certain sensitivity.

Setting of zones for parallel line application

Parallel line in service – Setting of zone 1

With reference to section "Parallel line applications", the zone reach can be set to 85% of the protected line.

However, influence of mutual impedance has to be taken into account.

Parallel line in service – setting of zone 2

Overreaching zones (in general, zones 2 and 3) must overreach the protected circuit in all cases. The greatest reduction of a reach occurs in cases when both parallel circuits are in service with a single phase-to-ground fault located at the end of a protected line. The equivalent zero sequence impedance circuit for this case is equal to the one in figure 59 in section "Parallel line in service".

The components of the zero sequence impedance for the overreaching zones must be equal to at least:

$$R_{0E} = R_0 + R_{m0}$$

(Equation 74)

$$X_{0E} = X_0 + X_{m0}$$

(Equation 75)

Check the reduction of a reach for the overreaching zones due to the effect of the zero sequence mutual coupling. The reach is reduced for a factor:

$$K0 = 1 - \frac{Z0_m}{2 \cdot Z1 + Z0 + R_f}$$

(Equation 76)

If the denominator in equation 76 is called B and Z0m is simplified to X0m, then the real and imaginary part of the reach reduction factor for the overreaching zones can be written as:

$$\mathrm{Re}\left(\overline{K}0\right) = 1 - \frac{X0m \cdot \mathrm{Re}\left(B\right)}{\mathrm{Re}\left(B\right)^2 + \mathrm{Im}\left(B\right)^2}$$

(Equation 77)

$$\mathrm{Im}\left(\overline{K}0\right) = \frac{X0m \cdot \mathrm{Im}\left(B\right)}{\mathrm{Re}\left(B\right)^2 + \mathrm{Im}\left(B\right)^2}$$

(Equation 78)

Parallel line is out of service and grounded in both ends

Apply the same measures as in the case with a single set of setting parameters. This means that an underreaching zone must not overreach the end of a protected circuit for the single phase-to-ground faults.

Set the values of the corresponding zone (zero-sequence resistance and reactance) equal to:

$$R_{0E} = R_0 \cdot \left(1 + \frac{X_{m0}^2}{R_0^2 + X_0^2}\right)$$

(Equation 79)

$$X_{0E} = X_0 \cdot \left(1 - \frac{X_{m0}^2}{R_0^2 + X_0^2}\right)$$

(Equation 80)

Setting of reach in resistive direction

Set the resistive reach *R1* independently for each zone.

Set separately the expected fault resistance for phase-to-phase faults *RFPP* and for the phase-to-ground faults *RFPE* for each zone. For each distance zone, set all remaining reach setting parameters independently of each other.

The final reach in resistive direction for phase-to-ground fault loop measurement automatically follows the values of the line-positive and zero-sequence resistance, and at the end of the protected zone is equal to equation 81.

$$R = \frac{1}{3}\left(2 \cdot R1 + R0\right) + RFPE$$

(Equation 81)

$$\varphi loop = \arctan\left[\frac{2 \cdot X1 + X0}{2 \cdot R1 + R0}\right]$$

(Equation 82)

Setting of the resistive reach for the underreaching zone 1 should follow the condition to minimize the risk for overreaching:

$$RFPE \leq 4.5 \cdot X1$$

(Equation 83)

The fault resistance for phase-to-phase faults is normally quite low, compared to the fault resistance for phase-to-ground faults. To minimize the risk for overreaching, limit the setting of the zone 1 reach in resistive direction for phase-to-phase loop measurement to:

$$RFPP \leq 3 \cdot X1$$

(Equation 84)

Load impedance limitation, without load encroachment function

The following instructions are valid when Phase selection with load encroachment, quadrilateral characteristic function FDPSPDIS (21) is not activated. To deactivate the function, the setting of the load resistance *RLdFwd* and *RldRev* in FDPSPDIS (21) must be set to max value (3000). If FDPSPDIS (21) is to be used for all or some of the measuring zones, the load limitation for those zones according to this chapter can be omitted. Check the maximum permissible resistive reach for any zone to ensure that there is a sufficient setting margin between the boundary and the minimum load impedance. The minimum load impedance (Ω/phase) is calculated as:

$$Z_{load\,min} = \frac{V^2}{S}$$

(Equation 85)

Where:

V is the minimum phase-to-phase voltage in kV

S is the maximum apparent power in MVA.

The load impedance [Ω/phase] is a function of the minimum operation voltage and the maximum load current:

$$Z_{load} = \frac{V_{min}}{\sqrt{3} \cdot I_{max}}$$

(Equation 86)

Minimum voltage V_{min} and maximum current I_{max} are related to the same operating conditions. Minimum load impedance occurs normally under emergency conditions.

As a safety margin is required to avoid load encroachment under three-phase conditions and to guarantee correct healthy phase IED operation under combined heavy three-phase load and ground faults, consider both: phase-to-phase and phase-to-ground fault operating characteristics.

To avoid load encroachment for the phase-to-ground measuring elements, the set resistive reach of any distance protection zone must be less than 80% of the minimum load impedance.

$$RFPE \leq 0.8 \cdot Z_{load}$$

(Equation 87)

This equation is applicable only when the loop characteristic angle for the single phase-to-ground faults is more than three times as large as the maximum expected load-impedance angle. For the case when the loop characteristic angle is less than three times the load-impedance angle, more accurate calculations are necessary according to equation 88.

$$RFPE \le 0.8 \cdot Z_{load\,\min} \cdot \left[\cos\partial - \frac{2 \cdot R1 + R0}{2 \cdot X1 + X0} \cdot \sin\partial \right]$$

(Equation 88)

Where:

ϑ is a maximum load-impedance angle, related to the maximum load power.

To avoid load encroachment for the phase-to-phase measuring elements, the set resistive reach of any distance protection zone must be less than 160% of the minimum load impedance.

$$RFPP \le 1.6 \cdot Z_{load}$$

(Equation 89)

Equation 89 is applicable only when the loop characteristic angle for the phase-to-phase faults is more than three times as large as the maximum expected load-impedance angle. More accurate calculations are necessary according to equation 90.

$$RFPP \le 1.6 \cdot Z_{load\,\min} \cdot \left[\cos\vartheta - \frac{R1}{X1} \cdot \sin\vartheta \right]$$

(Equation 90)

All this is applicable for all measuring zones when no Power swing detection function ZMRPSB (78) is activated in the IED. Use an additional safety margin of approximately 20% in cases when a ZMRPSB (78) function is activated in the IED, refer to the description of Power swing detection function ZMRPSB (78).

Load impedance limitation, with Phase selection with load encroachment, quadrilateral characteristic function activated

The parameters for shaping of the load encroachment characteristic are found in the description of Phase selection with load encroachment, quadrilateral characteristic function (FDPSPDIS, 21).

Setting of minimum operating currents

The operation of Distance protection zone, quadrilateral characteristic (ZMQPDIS, 21) can be blocked if the magnitude of the currents is below the set value of the parameter *IMinPUPP* and *IMinPUPG*.

The default setting of *IMinPUPP* and *IMinPUPG* is 20% of *IBase* where *IBase* is the chosen current for the analogue input channels. The value has been proven in practice to be suitable in most of the applications. However, there might be applications where it is necessary to increase the sensitivity by reducing the minimum operating current down to 10% of *IBase*. This happens especially in cases, when the IED serves as a remote back-up protection on series of very long transmission lines.

Setting *IMinOpIR* blocks the phase-to-ground loop if $3I_0$<*IMinOpIR*. The default setting of *IMinOpIR* is 5% of *IBase*.

The minimum operating fault current is automatically reduced to 75% of its set value, if the distance protection zone has been set for the operation in reverse direction.

Directional impedance element for quadrilateral characteristics

The evaluation of the directionality takes place in Directional impedance quadrilateral function ZDRDIR (21D). Equation 91 and equation 92 are used to classify that the fault is in forward direction for phase-to-ground fault and phase-to-phase fault.

$$-ArgDir < \arg \frac{0.8 \cdot \overline{V}1_{L1} + 0.2 \cdot \overline{V}1_{L1M}}{\overline{I}_{L1}} < ArgNeg \operatorname{Re} s$$

(Equation 91)

For the AB element, the equation in forward direction is according to.

$$-ArgDir < \arg \frac{0.8 \cdot \overline{V}1_{L1L2} + 0.2 \cdot \overline{V}1_{L1L2M}}{\overline{I}_{L1L2}} < ArgNeg \operatorname{Re} s$$

(Equation 92)

where:

AngDir	is the setting for the lower boundary of the forward directional characteristic, by default set to 15 (= -15 degrees) and
AngNegRes	is the setting for the upper boundary of the forward directional characteristic, by default set to 115 degrees, see figure 66.
$V1_A$	is positive sequence phase voltage in phase A
$V1_{AM}$	is positive sequence memorized phase voltage in phase A
I_A	is phase current in phase A
$V1_{AB}$	is voltage difference between phase A and B (B lagging A)
$V1_{ABM}$	is memorized voltage difference between phase A and B (B lagging A)
I_{AB}	is current difference between phase A and B (B lagging A)

The setting of *AngDir* and *AngNegRes* is by default set to 15 (= -15) and 115 degrees respectively (as shown in figure 66). It should not be changed unless system studies have shown the necessity.

ZDRDIR gives binary coded directional information per measuring loop on the output STDIRCND.

```
STDIR=   FWD_A*1+FWD_B*2+FWD_C*4+FWD_AB*8+
         +FWD_BC*16+FWD_CA*32+REV_A*64+REV_B*128+REV_C*256+
         +REV_AB*512+REV_BC*1024+REV_CA*2048
```

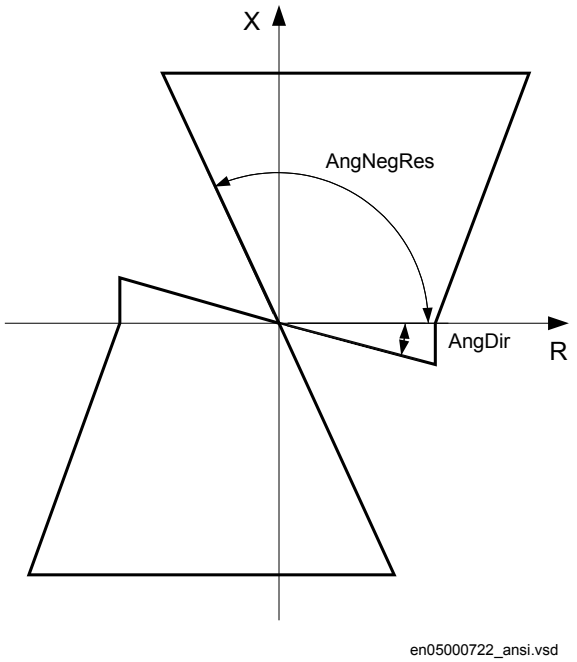

Figure 66: Setting angles for discrimination of forward and reverse fault in Directional impedance quadrilateral function ZDRDIR (21D)

The reverse directional characteristic is equal to the forward characteristic rotated by 180 degrees.

The polarizing voltage is available as long as the positive sequence voltage exceeds 5% of the set base voltage *VBase*. So the directional element can use it for all unsymmetrical faults including close-in faults.

For close-in three-phase faults, the $V1_{AM}$ memory voltage, based on the same positive sequence voltage, ensures correct directional discrimination.

The memory voltage is used for 100 ms or until the positive sequence voltage is restored.

After 100ms the following occurs:

- If the current is still above the set value of the minimum operating current (between 10 and 30% of the set IED rated current *IBase*), the condition seals in.
  - If the fault has caused tripping, the trip endures.
  - If the fault was detected in the reverse direction, the measuring element in the reverse direction remains in operation.
- If the current decreases below the minimum operating value, the memory resets until the positive sequence voltage exceeds 10% of its rated value.

Setting of timers for distance protection zones

The required time delays for different distance protection zones are independent of each other . Distance protection zone 1 can also have a time delay, if so required for selectivity reasons. Time delays for all zones can be set in a range of 0 to 60 seconds. The tripping function of each particular zone can be inhibited by setting the corresponding *Operation* parameter to *Disabled*. Different time delays are possible for the phase-to-ground *tLG* and for the phase-to-phase *tPP* measuring loops in each distance protection zone separately, to further increase the total flexibility of a distance protection.

3.6.1.4 Setting parameters

Signals and settings for ZMQPDIS are valid for zone 1 while signals and settings for ZMQAPDIS are valid for zone 2 - 5

Table 50: ZMQPDIS (21) Group settings (basic)

Name	Values (Range)	Unit	Step	Default	Description
Operation	Disabled Enabled	-	-	Enabled	Disable/Enable Operation
IBase	1 - 99999	A	1	3000	Base current, i.e. rated current
VBase	0.05 - 2000.00	kV	0.05	400.00	Base voltage, i.e. rated voltage
OperationDir	Disabled Non-directional Forward Reverse	-	-	Forward	Operation mode of directionality NonDir / Forw / Rev
X1	0.10 - 3000.00	ohm/p	0.01	30.00	Positive sequence reactance reach
R1	0.01 - 1000.00	ohm/p	0.01	5.00	Positive seq. resistance for zone characteristic angle
X0	0.10 - 9000.00	ohm/p	0.01	100.00	Zero sequence reactance reach

Table continues on next page

Name	Values (Range)	Unit	Step	Default	Description
R0	0.01 - 3000.00	ohm/p	0.01	15.00	Zero seq. resistance for zone characteristic angle
RFPP	0.10 - 3000.00	ohm/l	0.01	30.00	Fault resistance reach in ohm/loop, Ph-Ph
RFPG	0.10 - 9000.00	ohm/l	0.01	100.00	Fault resistance reach in ohm/loop, Ph-G
OperationPP	Disabled Enabled	-	-	Enabled	Operation mode Disable/Enable of Phase-Phase loops
Timer tPP	Disabled Enabled	-	-	Enabled	Operation mode Disable/Enable of Zone timer, Ph-Ph
tPP	0.000 - 60.000	s	0.001	0.000	Time delay of trip, Ph-Ph
OperationPG	Disabled Enabled	-	-	Enabled	Operation mode Disable/Enable of Phase-Ground loops
Timer tPG	Disabled Enabled	-	-	Enabled	Operation mode Disable/ Enable of Zone timer, Ph-G
tPG	0.000 - 60.000	s	0.001	0.000	Time delay of trip, Ph-G
IMinPUPP	10 - 1000	%IB	1	20	Minimum pickup delta current (2 x current of lagging phase) for Phase-to-phase loops
IMinPUPG	10 - 1000	%IB	1	20	Minimum pickup phase current for Phase-to-ground loops
IMinOpIR	5 - 1000	%IB	1	5	Minimum operate residual current for Phase-Ground loops

Table 51: ZMQAPDIS (21) Group settings (basic)

Name	Values (Range)	Unit	Step	Default	Description
Operation	Disabled Enabled	-	-	Enabled	Disable/Enable Operation
IBase	1 - 99999	A	1	3000	Base current, i.e. rated current
Vbase	0.05 - 2000.00	kV	0.05	400.00	Base voltage, i.e. rated voltage
OperationDir	Disabled Non-directional Forward Reverse	-	-	Forward	Operation mode of directionality NonDir / Forw / Rev
X1	0.10 - 3000.00	ohm/p	0.01	40.00	Positive sequence reactance reach
R1	0.01 - 1000.00	ohm/p	0.01	5.00	Positive seq. resistance for zone characteristic angle
X0	0.10 - 9000.00	ohm/p	0.01	120.00	Zero sequence reactance reach
R0	0.01 - 3000.00	ohm/p	0.01	15.00	Zero seq. resistance for zone characteristic angle
RFPP	0.10 - 3000.00	ohm/l	0.01	30.00	Fault resistance reach in ohm/loop, Ph-Ph
RFPG	0.10 - 9000.00	ohm/l	0.01	100.00	Fault resistance reach in ohm/loop, Ph-G
OperationPP	Disabled Enabled	-	-	Enabled	Operation mode Disable/Enable of Phase-Phase loops
Table continues on next page					

Name	Values (Range)	Unit	Step	Default	Description
Timer tPP	Disabled Enabled	-	-	Enabled	Operation mode Disable/Enable of Zone timer, Ph-Ph
tPP	0.000 - 60.000	s	0.001	0.000	Time delay of trip, Ph-Ph
OperationPG	Disabled Enabled	-	-	Enabled	Operation mode Disable/Enable of Phase-Ground loops
Timer tPG	Disabled Enabled	-	-	Enabled	Operation mode Disable/ Enable of Zone timer, Ph-G
tPG	0.000 - 60.000	s	0.001	0.000	Time delay of trip, Ph-G
IMinPUPP	10 - 1000	%IB	1	20	Minimum pickup delta current (2 x current of lagging phase) for Phase-to-phase loops
IMinPUPG	10 - 1000	%IB	1	20	Minimum pickup phase current for Phase-to-ground loops

Table 52: ZDRDIR (21D) Group settings (basic)

Name	Values (Range)	Unit	Step	Default	Description
IBase	1 - 99999	A	1	3000	Base setting for current level
VBase	0.05 - 2000.00	kV	0.05	400.00	Base setting for voltage level
IMinPUPP	5 - 30	%IB	1	10	Minimum pickup delta current (2 x current of lagging phase) for Phase-to-phase loops
IMinPUPG	5 - 30	%IB	1	5	Minimum pickup phase current for Phase-to-ground loops
AngNegRes	90 - 175	Deg	1	115	Angle of blinder in second quadrant for forward direction
AngDir	5 - 45	Deg	1	15	Angle of blinder in fourth quadrant for forward direction

3.6.2 Distance measuring zone, quadrilateral characteristic for series compensated lines ZMCPDIS (21), ZMCAPDIS (21), ZDSRDIR (21D)

Function description	IEC 61850 identification	IEC 60617 identification	ANSI/IEEE C37.2 device number
Distance measuring zone, quadrilateral characteristic for series compensated lines (zone 1)	ZMCPDIS	Z <	21
Distance measuring zone, quadrilateral characteristic for series compensated lines (zone 2-5)	ZMCAPDIS	Z <	21
Directional impedance quadrilateral, including series compensation	ZDSRDIR	Z<->	21D

3.6.2.1 Application

Introduction

Sub transmission networks are being extended and often become more and more complex, consisting of a high number of multi-circuit and/or multi terminal lines of very different lengths. These changes in the network will normally impose more stringent demands on the fault clearing equipment in order to maintain an unchanged or increased security level of the power system.

The distance protection function is designed to meet basic requirements for application on transmission and sub transmission lines (solid grounded systems) although it also can be used on distribution levels.

System grounding

The type of system grounding plays an important roll when designing the protection system. In the following sections, some hints with respect to distance protection are highlighted.

Solid grounded networks

In solid grounded systems the transformer neutrals are connected solidly to ground without any impedance between the transformer neutral and ground.

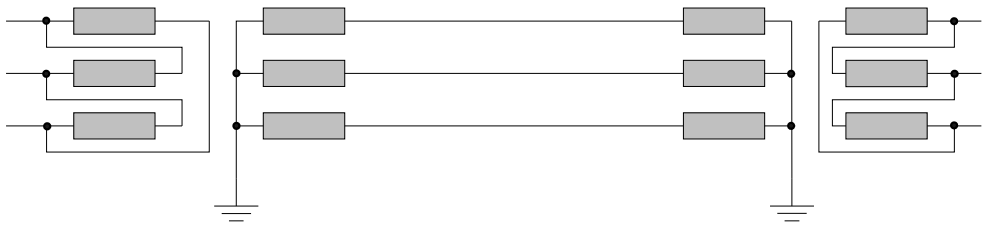

Figure 67: Solidly grounded network

The ground fault current is as high or even higher than the short-circuit current. The series impedances determine the magnitude of the fault current. The shunt admittance has very limited influence on the ground fault current. The shunt admittance may, however, have some marginal influence on the ground fault current in networks with long transmission lines.

The ground fault current at single phase -to-ground in phase A can be calculated as equation 93:

$$3I_0 = \frac{3 \cdot V_A}{Z_1 + Z_2 + Z_0 + 3Z_f} = \frac{V_A}{Z_1 + Z_N + Z_f}$$

(Equation 93)

Where:

VA	is the phase-to-ground voltage (kV) in the faulty phase before fault
Z1	is the positive sequence impedance (Ω/phase)
Z2	is the negative sequence impedance (Ω/phase)
Z0	is the zero sequence impedance (Ω/phase)
Zf	is the fault impedance (Ω), often resistive
ZN	is the ground return impedance defined as (Z0-Z1)/3

The voltage on the healthy phases is generally lower than 140% of the nominal phase-to-ground voltage. This corresponds to about 80% of the nominal phase-to-phase voltage.

The high zero sequence current in solid grounded networks makes it possible to use impedance measuring technique to detect ground-fault. However, distance protection has limited possibilities to detect high resistance faults and must, therefore, always be complemented with other protection function(s) that can carry out the fault clearance in those cases.

Effectively grounded networks

A network is defined as effectively grounded if the ground-fault factor fe is less than 1.4. The ground-fault factor is defined according to equation 47.

$$f_e = \left| \frac{V_{max}}{V_{pn}} \right|$$

(Equation 94)

Where:

V_{max} is the highest fundamental frequency voltage on one of the healthy phases at single phase-to-ground fault.

V_{pn} is the phase-to-ground fundamental frequency voltage before fault.

Another definition for effectively grounded network is when the following relationships between the symmetrical components of the network impedances are valid, as shown in equation 95 and equation 96.

$$X_0 = 3 \cdot X_1$$

(Equation 95)

$$R_0 \leq R_1$$

(Equation 96)

The magnitude of the ground fault current in effectively grounded networks is high enough for impedance measuring element to detect ground-fault. However, in the same way as for solid grounded networks, distance protection has limited possibilities to detect high resistance faults and must, therefore, always be complemented with other protection function(s) that can carry out the fault clearance in this case.

Fault infeed from remote end

All transmission and most all sub transmission networks are operated meshed. Typical for this type of network is that we will have fault infeed from remote end when fault occurs on the protected line. The fault infeed may enlarge the fault impedance seen by the distance protection. This effect is very important to keep in mind when both planning the protection system and making the settings.

With reference to figure 68, we can draw the equation for the bus voltage Va at left side as:

$$\overline{V}_A = \overline{I}_A \cdot p \cdot Z_L + (\overline{I}_A + \overline{I}_B) \cdot R_f$$

(Equation 97)

If we divide Va by IA we get Z present to the IED at A side

$$\overline{Z}_A = \frac{\overline{V}_a}{\overline{I}_A} = p \cdot \overline{Z}_L + \frac{\overline{I}_A + \overline{I}_B}{\overline{I}_A} \cdot R_f$$

(Equation 98)

The infeed factor (IA+IB)/IA can be very high, 10-20 depending on the differences in source impedances at local and remote end.

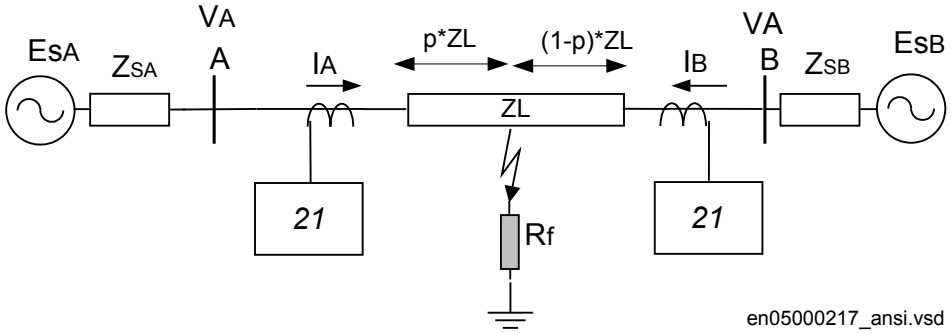

Figure 68: Influence of fault infeed from remote end

The effect of fault current infeed from remote end is one of the most driving factors to justify complementary protection to distance protection.

Load encroachment

Sometimes the load impedance might enter the zone characteristic without any fault on the protected line. The phenomenon is called load encroachment and it might occur when an external fault is cleared and high emergency load is transferred on the protected line. The effect of load encroachment is illustrated to the left in figure 69. The entrance of the load impedance inside the characteristic is not allowed and the way to handle this with conventional distance protection is to consider this with the settings that is, to have a security margin between the distance zone and the minimum load impedance. This has the drawback that it will reduce the sensitivity of the protection that is, the ability to detect resistive faults.

The IED has a built in function which shapes the characteristic according to the right figure 69. The load encroachment algorithm increases the possibility to detect high fault resistances, especially for line to ground faults at remote end. For example, for a given setting of the load angle *LdAngle* for the load encroachment function, the resistive blinder for the zone measurement can be expanded according to the right in figure 69 given higher fault resistance coverage without risk for unwanted operation due to load encroachment. This is valid in both directions.

The use of the load encroachment feature is essential for long heavy loaded lines, where there might be a conflict between the necessary emergency load transfer and necessary sensitivity of the distance protection. The function can also preferably be used on heavy loaded medium long lines. For short lines the major concern is to get sufficient fault resistance coverage and load encroachment is not a major problem. So, for short lines, the load encroachment function could preferable be switched off.

The settings of the parameters for load encroachment are done in the Phase selection with load enchroachment, quadrilateral characteristic (FDPSPDIS, 21) function.

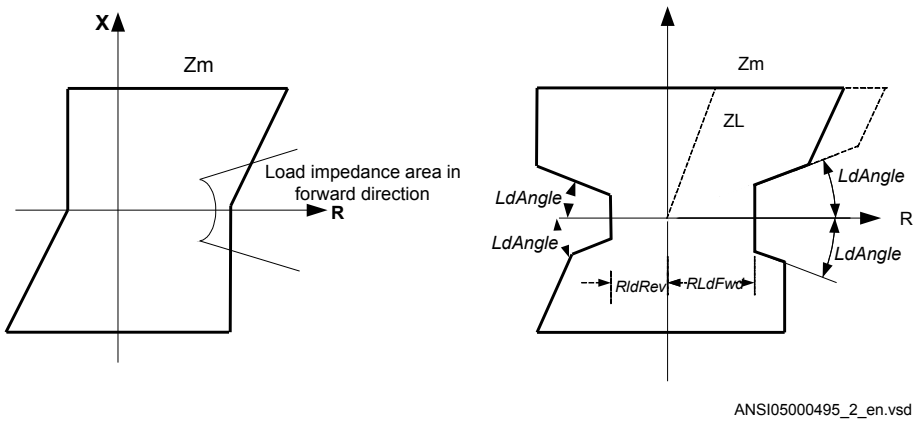

Figure 69: Load encroachment phenomena and shaped load encroachment characteristic

Long transmission line application

For long transmission lines the margin to the load impedance that is, to avoid load encroachment, will normally be a major concern. It is difficult to achieve high sensitivity for line to ground-fault at remote end of a long lines when the line is heavy loaded.

Definition of long lines with respect to the performance of distance protection can generally be described as in table 53, long lines have SIR's less than 0.5.

Table 53: Definition of long lines

Line category	Vn 110 kV	Vn 500 kV
Long lines	45-60 miles	200-250 miles
Very long lines	>60 miles	>250 miles

The possibility in IED to set resistive and reactive reach independent for positive and zero sequence fault loops and individual fault resistance settings for phase-to-phase

and phase-to-ground fault together with load encroachment algorithm improves the possibility to detect high resistive faults at the same time as the security is improved (risk for unwanted trip due to load encroachment is eliminated), as shown in figure 70.

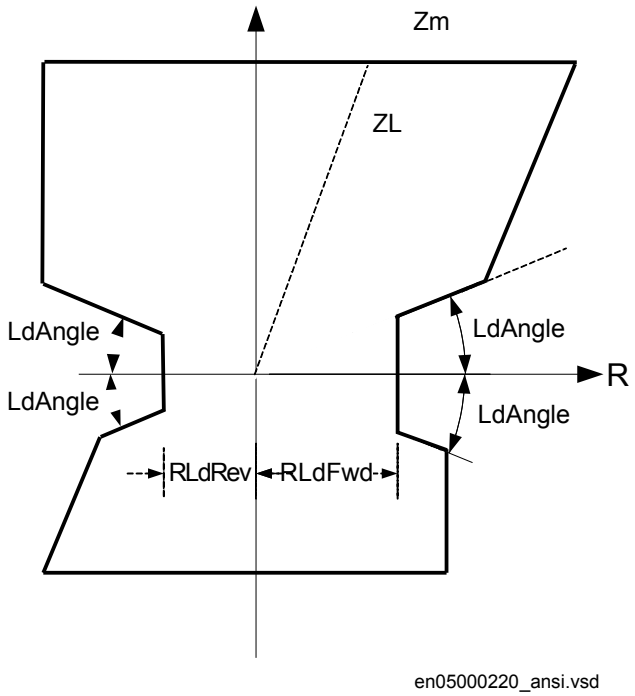

Figure 70: Characteristic for zone measurement for long line with load encroachment activated

Parallel line application with mutual coupling

General

Introduction of parallel lines in the network is increasing due to difficulties to get necessary area for new lines.

Parallel lines introduce an error in the measurement due to the mutual coupling between the parallel lines. The lines need not be of the same voltage to experience mutual coupling, and some coupling exists even for lines that are separated by 100 meters or more. The reason to the introduced error in measuring due to mutual coupling is the zero sequence voltage inversion that occurs.

It can be shown from analytical calculations of line impedances that the mutual impedances for positive and negative sequence are very small (< 1-2%) of the self impedance and it is practice to neglect them.

From an application point of view there exists three types of network configurations (classes) that must be considered when making the settings for the protection function. Those are:

- Parallel line with common positive and zero sequence network
- Parallel circuits with common positive but isolated zero-sequence network
- Parallel circuits with positive and zero sequence sources isolated

One example of class3 networks could be the mutual coupling between a 400 kV line and rail road overhead lines. This type of mutual coupling is not so common although it exists and is not treated any further in this manual.

For each type of network class we can have three different topologies; the parallel line can be in service, out of service, out of service and grounded in both ends.

The reach of the distance protection zone1 will be different depending on the operation condition of the parallel line. It is therefore recommended to use the different setting groups to handle the cases when the parallel line is in operation and out of service and grounded at both ends.

The distance protection within the IED can compensate for the influence of a zero-sequence mutual coupling on the measurement at single phase-to-ground faults in the following ways, by using:

- The possibility of different setting values that influence the ground-return compensation for different distance zones within the same group of setting parameters.
- Different groups of setting parameters for different operating conditions of a protected multi circuit line.

Most multi circuit lines have two parallel operating circuits. The application guide mentioned below recommends in more detail the setting practice for this particular type of line. The basic principles also apply to other multi circuit lines.

Parallel line applications

This type of networks are defined as those networks where the parallel transmission lines terminate at common nodes at both ends. We consider the three most common operation modes:

- parallel line in service
- parallel line out of service and grounded
- parallel line out of service and not grounded

Parallel line in service

This type of application is very common and applies to all normal sub-transmission and transmission networks.

Here is the description of what happens when a fault occurs on the parallel line, as shown in figure 71.

From symmetrical components, it is possible to derive the impedance Z at the IED point for normal lines without mutual coupling according to equation 99.

$$\overline{Z} = \frac{\overline{V}_{ph}}{\overline{I}_{ph} + 3\overline{I}_0 \cdot \frac{\overline{Z}_0 - \overline{Z}_1}{3 \cdot \overline{Z}_1}} = \frac{\overline{V}_{ph}}{\overline{I}_{ph} + 3I_0 \cdot \overline{K}_N}$$

(Equation 99)

Where:

Vph	is phase-to-ground voltage at the IED point
Iph	is phase current in the faulty phase
3I0	is ground-fault current
Z1	is positive sequence impedance
Z0	is zero sequence impedance

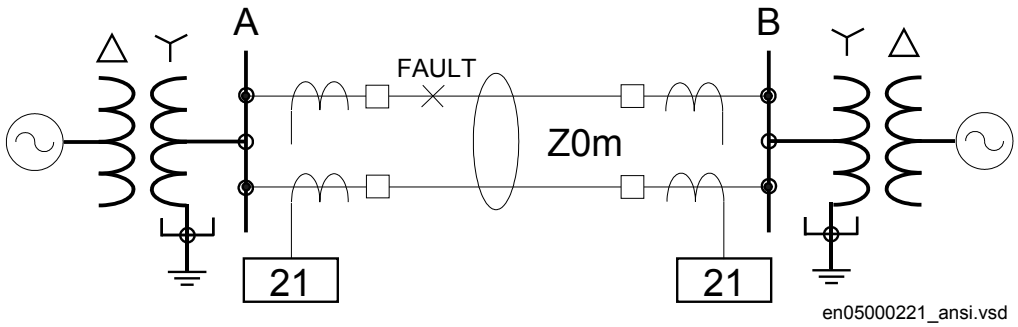

Figure 71: Class 1, parallel line in service

The equivalent circuit of the lines can be simplified, as shown in figure 72.

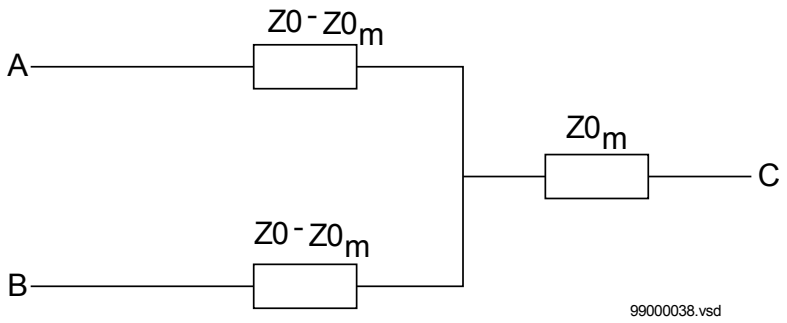

Figure 72: Equivalent zero sequence impedance circuit of the double-circuit, parallel, operating line with a single phase-to-ground-fault at the remote busbar

When mutual coupling is introduced, the voltage at the IED point A is changed, according to equation 100.

$$V_{ph} = \overline{Z}1_L \cdot \left(\overline{I}_{ph} + 3\overline{I}_0 \cdot \frac{\overline{Z}0_L - \overline{Z}1_L}{3 \cdot \overline{Z}1_L} \cdot 3\overline{I}_{0p} \frac{\overline{Z}0_m}{3 \cdot \overline{Z}1_L} \right)$$

(Equation 100)

By dividing equation 100 by equation 99 and after some simplification we can write the impedance present to the IED at A side as:

$$Z = \overline{Z}_t \left(1 + \frac{3\overline{I}0 \cdot \overline{K}Nm}{\overline{I}ph + 3\overline{I}0 \cdot \overline{K}N} \right)$$

(Equation 101)

Where:

KNm = Z0m/(3 · Z1L)

The second part in the parentheses is the error introduced to the measurement of the line impedance.

If the current on the parallel line has negative sign compared to the current on the protected line that is, the current on the parallel line has an opposite direction compared to the current on the protected line, the distance function overreaches. If the currents have the same direction, the distance protection underreaches.

Maximum overreach occurs if the fault infeed from remote end is weak. If we consider a single phase-to-ground fault at "p" unit of the line length from A to B on the parallel line for the case when the fault infeed from remote end is zero, we can draw the voltage V in the faulty phase at A side as in equation 102.

$$V_A = p \cdot Z1_L \left(I_{ph} + K_N \cdot 3I_0 + K_{Nm} \cdot 3I_{0p} \right)$$

(Equation 102)

Notice that the following relationship exists between the zero sequence currents:

$$3I_0 \cdot Z0_L = 3I0p \cdot Z0_L \left(2 - p \right)$$

(Equation 103)

Simplification of equation 103, solving it for 3I0p and substitution of the result into equation 102 gives that the voltage can be drawn as:

$$V_A = p \cdot Z1_L \left(Iph + K_N \cdot 3I0 + KN_m \cdot \frac{3I0 \cdot p}{2 - p} \right)$$

(Equation 104)

If we finally divide equation 104 with equation 99 we can draw the impedance present to the IED as

$$Z = p \cdot Z1_L \left[\frac{\left(Iph + KN \cdot 3I0 + KN_m \cdot \frac{3I_0 \cdot p}{2 - p} \right)}{Iph + 3I_0 \cdot KN} \right]$$

(Equation 105)

Calculation for a 400 kV line, where we for simplicity have excluded the resistance, gives with X1L=0.48 Ohm/Mile, X0L=1.4Ohms/Mile, zone 1 reach is set to 90% of the line reactance p=71% that is, the protection is underreaching with approximately 20%.

The zero-sequence mutual coupling can reduce the reach of distance protection on the protected circuit when the parallel line is in normal operation. The reduction of the reach is most pronounced with no infeed in the line IED closest to the fault. This reach reduction is normally less than 15%. But when the reach is reduced at one line end, it is proportionally increased at the opposite line end. So this 15% reach reduction does not significantly affect the operation of a permissive under-reach scheme.

Parallel line out of service and grounded

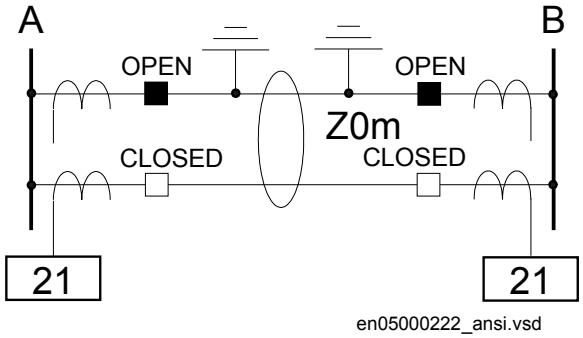

Figure 73: The parallel line is out of service and grounded

When the parallel line is out of service and grounded at both ends on the bus bar side of the line CT so that zero sequence current can flow on the parallel line, the equivalent zero sequence circuit of the parallel lines will be according to figure 73.

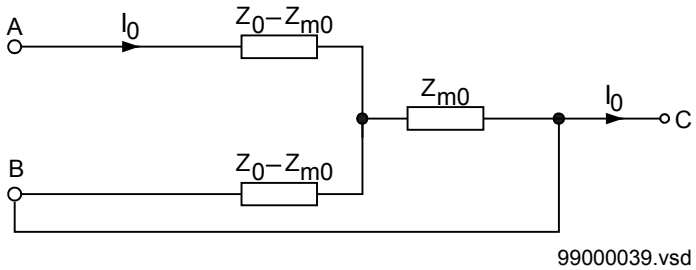

Figure 74: Equivalent zero-sequence impedance circuit for the double-circuit line that operates with one circuit disconnected and grounded at both ends

Here the equivalent zero sequence impedance is equal to Z0-Z0m in parallel with (Z0-Z0m)/Z0-Z0m+Z0m which is equal to equation 106.

$$\overline{Z}_E = \frac{\overline{Z}_0^2 - \overline{Z}_{om}^2}{\overline{Z}_0}$$

(Equation 106)

The influence on the distance measurement can be a considerable overreach, which must be considered when calculating the settings. It is recommended to use a separate setting group for this operation condition, since it reduces the reach considerably when the line is in operation. All expressions below are proposed for practical use. They assume the value of zero sequence, mutual resistance R0m equals to zero. They consider only the zero-sequence, mutual reactance X0m. Calculate the equivalent X0E and R0E zero-sequence parameters according to equation 107 and equation 108 for

each particular line section and use them for calculating the reach for the underreaching zone.

$$R_{0E} = R_0 \bullet \left(1 + \frac{X_{0m}^{\ 2}}{R_0^2 + X_0^2}\right)$$

(Equation 107)

$$X_{0E} = X_0 \bullet \left(1 - \frac{X_{0m}^{\ 2}}{R_0^2 + X_0^2}\right)$$

(Equation 108)

Parallel line out of service and not grounded

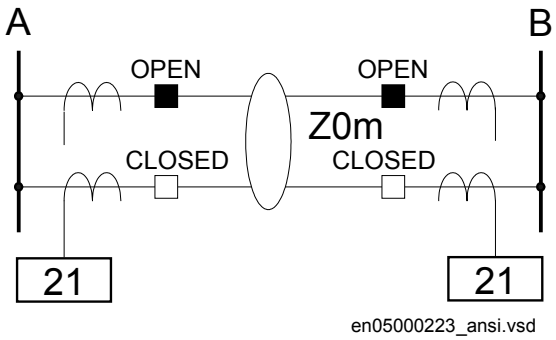

Figure 75: Parallel line is out of service and not grounded

When the parallel line is out of service and not grounded, the zero sequence on that line can only flow through the line admittance to the ground. The line admittance is high which limits the zero sequence current on the parallel line to very low values. In practice, the equivalent zero sequence impedance circuit for faults at the remote bus bar can be simplified to the circuit shown in figure 75.

The line zero-sequence mutual impedance does not influence the measurement of the distance protection in a faulty circuit. This means that the reach of the underreaching distance protection zone is reduced if, due to operating conditions, the equivalent zero sequence impedance is set according to the conditions when the parallel system is out of operation and grounded at both ends.

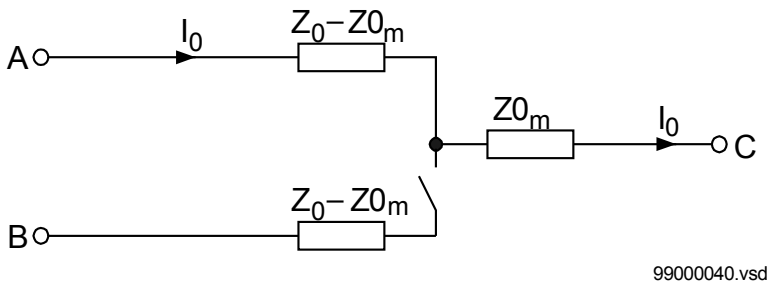

Figure 76: Equivalent zero-sequence impedance circuit for a double-circuit line with one circuit disconnected and not grounded

The reduction of the reach is equal to equation 109.

$$\overline{K}_U = \frac{\frac{1}{3}\cdot\left(2\cdot\overline{Z_1}+\overline{Z_{0E}}\right)+R_f}{\frac{1}{3}\cdot\left(2\cdot\overline{Z_1}+\overline{Z_0}\right)+R_f} = 1-\frac{\overline{Z_{m0}}^2}{\overline{Z_0}\cdot\left(2\cdot\overline{Z}_1+\overline{Z}_0+3R_f\right)}$$

(Equation 109)

This means that the reach is reduced in reactive and resistive directions. If the real and imaginary components of the constant A are equal to equation 110 and equation 111.

$$\mathrm{Re}(\overline{A}) = R0\cdot(2\cdot R1+R0+3\cdot Rf)-X0\cdot(X0+2\cdot X1)$$

(Equation 110)

$$\mathrm{Im}(\overline{A}) = X_0\cdot(2\cdot R_1+R_0+3\cdot R_1)+R_0\cdot(2\cdot X_1+X_0)$$

(Equation 111)

The real component of the KU factor is equal to equation 112.

$$\mathrm{Re}\left(\overline{K}_U\right) = 1+\frac{\mathrm{Re}\left(\overline{A}\right)\cdot X_{m0}{}^2}{\left[\mathrm{Re}\left(\overline{A}\right)\right]^2+\left[\mathrm{Im}\left(\overline{A}\right)\right]^2}$$

(Equation 112)

The imaginary component of the same factor is equal to equation 113.

$$\mathrm{Im}\left(\overline{K}_U\right) = \frac{\mathrm{Im}\left(\overline{A}\right) \cdot X_{m0}^{\ 2}}{\left[\mathrm{Re}\left(\overline{A}\right)\right]^2 + \left[\mathrm{Im}\left(\overline{A}\right)\right]^2}$$

(Equation 113)

Ensure that the underreaching zones from both line ends will overlap a sufficient amount (at least 10%) in the middle of the protected circuit.

Tapped line application

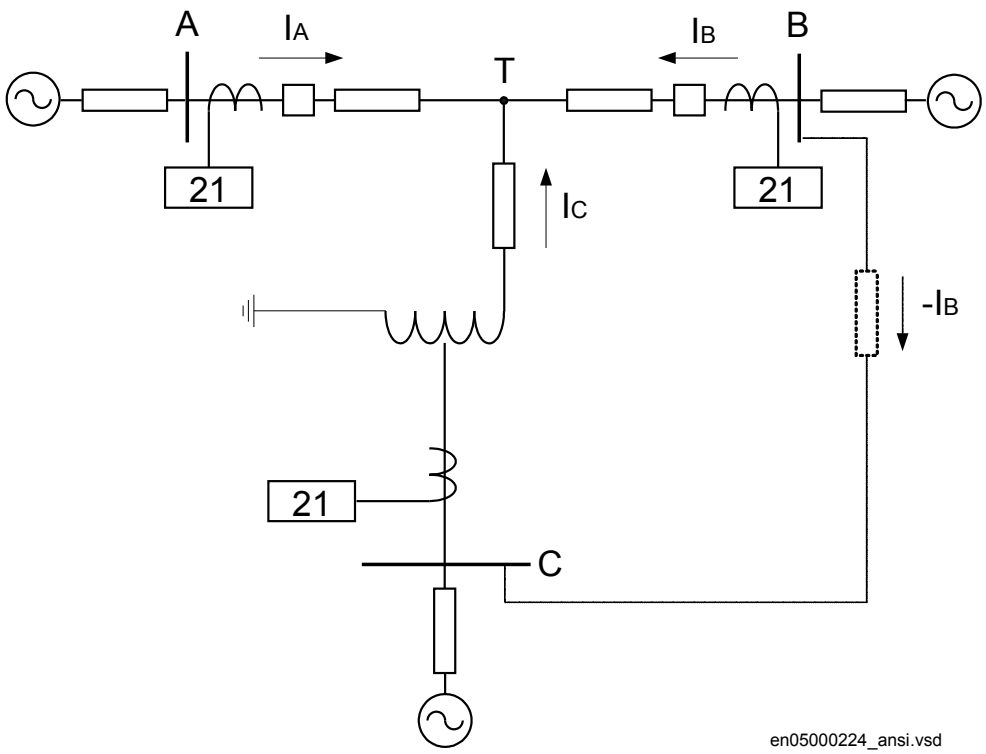

Figure 77: Example of tapped line with Auto transformer

This application gives rise to similar problem that was highlighted in section "Fault infeed from remote end" that is, increased measured impedance due to fault current infeed. For example, for faults between the T point and B station the measured impedance at A and C is as follows:

$$\bar{Z}_A = \bar{Z}_{AT} + \frac{\bar{I}_A + \bar{I}_C}{\bar{I}_A} \cdot \bar{Z}_{TF}$$

(Equation 114)

$$\overline{Z}_C = \overline{Z}_{Trf} + (\overline{Z}_{CT} + \frac{\dot{I}_A + \dot{I}_C}{\dot{I}_C} \cdot \overline{Z}_{TB}) \cdot (\frac{V2}{V1})^2$$

(Equation 115)

Where:

ZAT and ZCT	is the line impedance from the B respective C station to the T point.
IA and IC	is fault current from A respective C station for fault between T and B.
V2/V1	Transformation ratio for transformation of impedance at V1 side of the transformer to the measuring side V2 (it is assumed that current and voltage distance function is taken from V2 side of the transformer).

For this example with a fault between T and B, the measured impedance from the T point to the fault can be increased by a factor defined as the sum of the currents from T point to the fault divided by the IED current. For the IED at C, the impedance on the high voltage side V1 has to be transferred to the measuring voltage level by the transformer ratio.

Another complication that might occur depending on the topology is that the current from one end can have a reverse direction for fault on the protected line. For example, for faults at T the current from B might go in reverse direction from B to C depending on the system parameters (as shown in the dotted line in figure 77), given that the distance protection in B to T will measure wrong direction.

In three-end application, depending on the source impedance behind the IEDs, the impedances of the protected object and the fault location, it might be necessary to accept zone2 trip in one end or sequential trip in one end.

Generally for this type of application it is difficult to select settings of zone1 that both gives overlapping of the zones with enough sensitivity without interference with other zone1 settings that is, without selectivity conflicts. Careful fault calculations are necessary to determine suitable settings and selection of proper scheme communication.

Fault resistance

The performance of distance protection for single phase-to-ground faults is very important, because normally more than 70% of the faults on transmission lines are single phase-to-ground faults. At these faults, the fault resistance is composed of three parts: arc resistance, resistance of a tower construction, and tower-footing resistance. The arc resistance can be calculated according to Warrington's formula:

$$Rarc = \frac{28707 \cdot L}{I^{1.4}}$$

(Equation 116)

where:

L represents the length of the arc (in meters). This equation applies for the distance protection zone 1. Consider approximately three-times arc foot spacing for the zone 2 and wind speed of approximately 30 m/h

I is the actual fault current in A.

In practice, the setting of fault resistance for both phase-to-ground (*RFPG*) and phase-to-phase (*RFPP*) must be as high as possible without interfering with the load impedance to obtain reliable fault detection.

Series compensation in power systems

The main purpose of series compensation in power systems is virtual reduction of line reactance in order to enhance the power system stability and increase loadability of transmission corridors. The principle is based on compensation of distributed line reactance by insertion of series capacitor (SC). The generated reactive power provided by the capacitor is continuously proportional to the square of the current flowing at the same time through the compensated line and series capacitor. This means that the series capacitor has a self-regulating effect. When the system loading increases, the reactive power generated by series capacitors increases as well. The response of SCs is automatic, instantaneous and continuous.

The main benefits of incorporating series capacitors in transmission lines are:

- Steady state voltage regulation and raise of voltage collapse limit
- Increase power transfer capability by raising the transient stability limit
- Improved reactive power balance
- Increase in power transfer capacity
- Active load sharing between parallel circuits and loss reduction
- Reduced costs of power transmission due to decreased investment costs for new power lines

Steady state voltage regulation and increase of voltage collapse limit

A series capacitor is capable of compensating the voltage drop of the series inductance in a transmission line, as shown in figure 78. During low loading, the system voltage drop is lower and at the same time, the voltage drop on the series capacitor is lower. When the loading increases and the voltage drop become larger, the contribution of the series capacitor increases and therefore the system voltage at the receiving line end can be regulated.

Series compensation also extends the region of voltage stability by reducing the reactance of the line and consequently the SC is valuable for prevention of voltage collapse. Figure 79 presents the voltage dependence at receiving bus B (as shown in figure 78) on line loading and compensation degree K_C, which is defined according to equation 117. The effect of series compensation is in this particular case obvious and self explanatory.

$$K_C = \frac{X_C}{X_{Line}}$$

(Equation 117)

A typical 500 km long 500 kV line is considered with source impedance

$$Z_{SA1} = 0$$

(Equation 118)

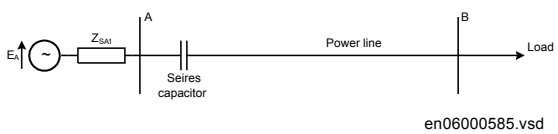

Figure 78: A simple radial power system

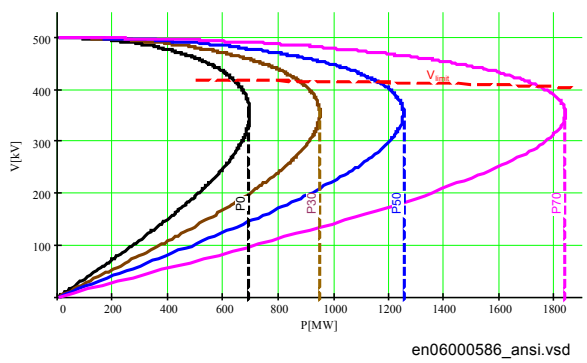

Figure 79: Voltage profile for a simple radial power line with 0, 30, 50 and 70% of compensation

Increased power transfer capability by raising the first swing stability limit

Consider the simple one-machine and infinite bus system shown in figure 80.

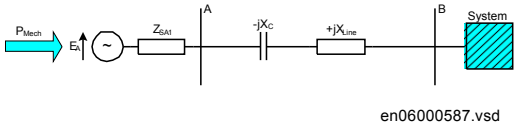

Figure 80: One machine and infinite bus system

The equal-areas criterion is used to show the effectiveness of a series capacitor for improvement of first swing transient stability (as shown in figure 81).

In steady state, the mechanical input power to the generator (P_{Mech}) is equal to the electrical output power from the generator (P_E) and the generator angle is δ_0. If a 3-phase fault occurs at a point near the machine, the electrical output of the generator reduces to zero. This means that the speed of the generator increases and the angle difference between the generator and the infinite bus increases during the fault. At the time of fault clearing, the angle difference has increased to δ_C. After reclosing of the system, the transmitted power exceeds the mechanical input power and the generator deaccelerates. The generator decelerates as long as equal area condition $A_{ACC}=A_{DEC}$ has not been fulfilled. The critical condition for post-fault system stability is that the angular displacement after fault clearing and during the deceleration does not exceed its critical limit δ_{CR}, because if it does, the system cannot get back to equilibrium and the synchronism is lost. The first swing stability and the stability margin can be evaluated by studying the different areas in figure 81 for the same system, once without SC and once with series compensation. The areas under the corresponding P – δ curves correspond to energy and the system remains stable if the accelerating energy that the generator picks up during the fault is lower than the decelerating energy that is transferred across the transmission line during the first system swing upon fault clearing.

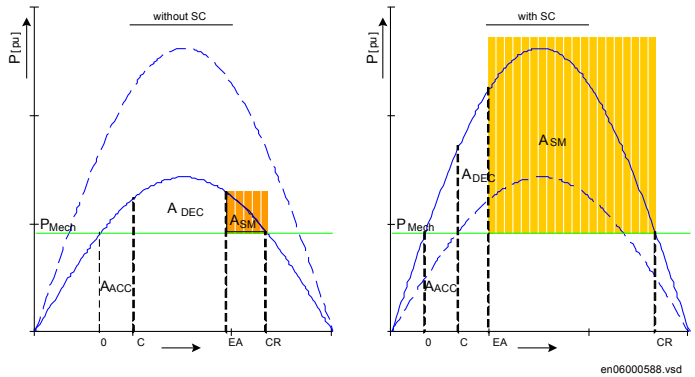

Figure 81: Equal area criterion and first swing stability without and with series compensation

This means that the system is stable if $A_{ACC} \leq (A_{DEC} + A_{SM})$. The stability margin is given by the difference between the available decelerating energy (area between the P

(δ) and P_{Mech} and the angular difference between δ_C and δ_{CR}) and the accelerating energy. It is represented in figure 81 by the area A_{SM}. Notice that a substantial increase in the stability margin is obtained by installing a series capacitor. The series compensation can improve the situation in two ways, it can decrease the initial angle difference δ_0 corresponding to a certain power transfer and it also shifts the P – δ curve upwards.

Improve reactive power balance

A series capacitor increases its output of reactive power instantaneously, continuously and automatically with increasing line load. It is thus a self-regulating device, which improves voltage regulation and reduces the need for other means of voltage control for example, shunt compensation. The reactive power balance of a series compensated line is shown in figure 82 as an example for 500 km long 500 kV transmission line with 50% compensation degree.

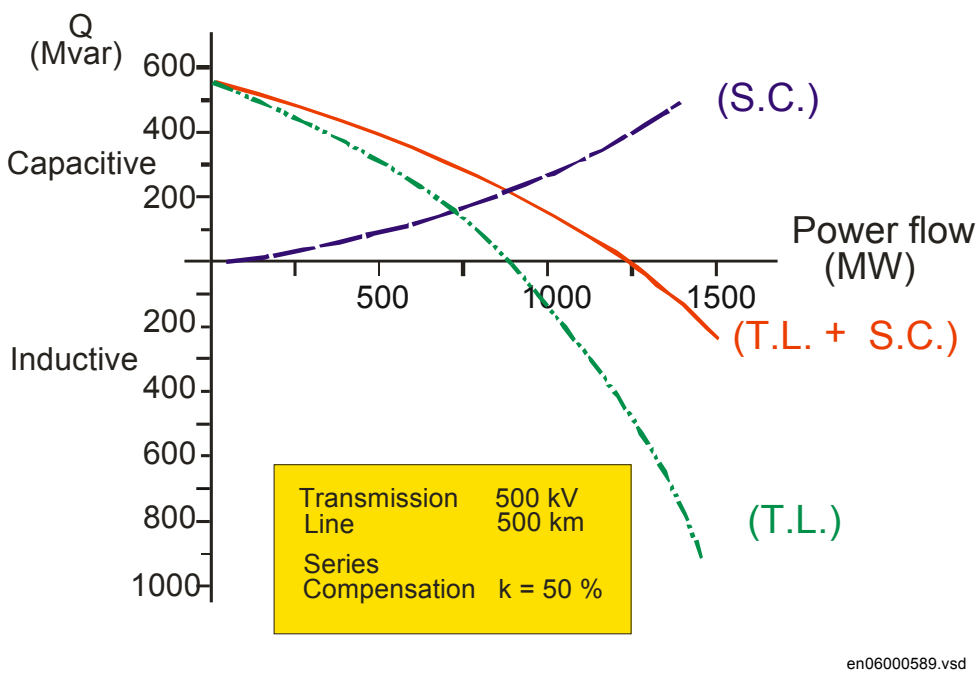

Figure 82: Self-regulating effect of reactive power balance

Increase in power transfer

The increase in power transfer capability as a function of the degree of compensation for a transmission line can be explained by studying the circuit shown in figure 83. The power transfer on the transmission line is given by the equation 119:

$$P = \frac{|V_A| \cdot |V_B| \cdot \sin(\delta)}{X_{Line} - X_C} = \frac{|V_A| \cdot |V_B| \cdot \sin(\delta)}{X_{Line} \cdot (1 - K_C)}$$

(Equation 119)

The compensation degree K_c is defined as equation 117

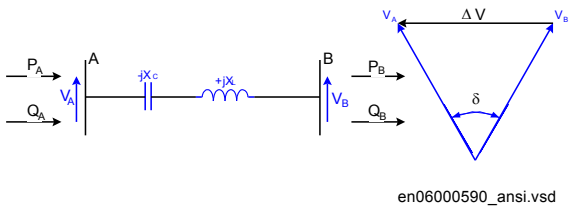

Figure 83: Transmission line with series capacitor

The effect on the power transfer when considering a constant angle difference (δ) between the line ends is illustrated in figure 84. Practical compensation degree runs from 20 to 70 percent. Transmission capability increases of more than two times can be obtained in practice.

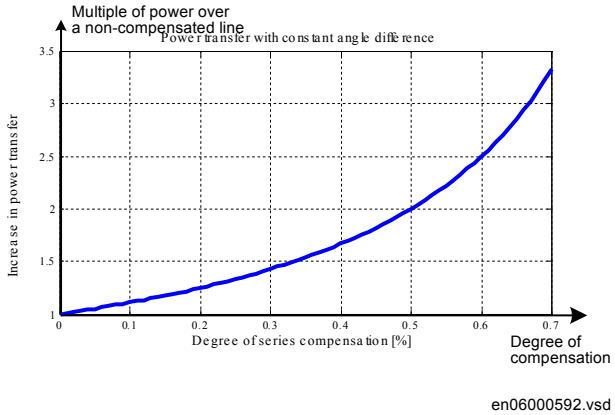

Figure 84: Increase in power transfer over a transmission line depending on degree of series compensation

Active load sharing between parallel circuits and loss reduction

A series capacitor can be used to control the distribution of active power between parallel transmission circuits. The compensation of transmission lines with sufficient thermal capacity can relieve the possible overloading of other parallel lines. This distribution is governed by the reactance, while the losses are determined by the resistance. A properly designed series compensation system can considerably reduce the total transmission system losses, as shown in figure 85.

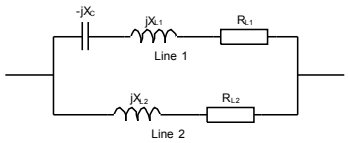

en06000593.vsd

Figure 85: Two parallel lines with series capacitor for optimized load sharing and loss reduction

To minimize the losses, the series capacitor must be installed in the transmission line with the lower resistance. The size of the series capacitor that minimizes the total losses is given the following expression:

$$\frac{X_{L1} - X_C}{X_{L2}} = \frac{R_{L1}}{R_{L2}}$$

(Equation 120)

Reduced costs of power transmission due to decreased investment costs for new power line

As shown in figure 84 the line loading can easily be increased 1.5-2 times by series compensation. Thus, the required number of transmission lines needed for a certain power transfer can be significantly reduced. The cost of series compensation is small compared to the cost of a transmission line. When evaluating the cost of a transmission system upgrade also the cost of secondary equipment such as eventual upgrading of line protections on the compensated as well as, adjacent lines should be considered. The main advantages of series compensation against the new transmission line within the same corridor are:

- Significantly reduced investment costs; the same increase in power transmission for up to 90% reduced costs
- In many cases, the only practical way to increase the transmission capacity of a corridor
- Series compensation shortens the lead times
- Environmental impact

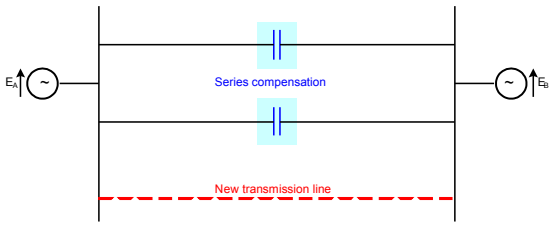

en06000594.vsd

Figure 86: Series compensation is an important alternative to new transmission lines

Advancements in series compensation using thyristor switching technology

A thyristor switched series capacitor (TSSC) can be used for power flow control. This is performed by changing the reactance of the transmission circuit in discrete steps, as shown in figure 87. A TSSC typically consists of a few segments in series that can be inserted independently of each other in order to achieve different total series capacitor reactance.

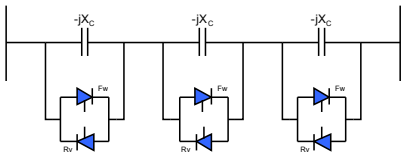

en06000595.vsd

Figure 87: Thyristor switched series capacitor

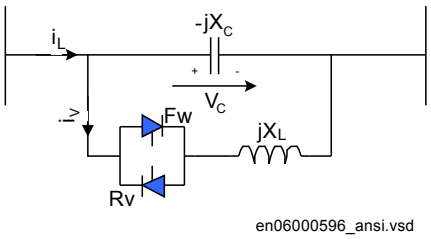

Figure 88: Thyristor controlled series capacitor

I_L Line current

I_V Current through the thyristor

U_C Voltage over the series capacitor

X_C Rated reactance of the series capacitor

A thyristor controlled series capacitor (TCSC) allows continuous control of the series capacitor reactance. This is achieved by adding current through the capacitor via the parallel thyristor valve path see figure 88. The main circuit of the TCSC consists of a capacitor bank and a thyristor controlled inductive branch connected in parallel. The capacitor bank may have a value of for example, 10...30 Ω/phase and a rated continuous current of 1500...3000 A. The capacitor bank for each phase is mounted on a platform providing full insulation towards ground. The thyristor valve contains a string of series connected high power thyristors with a maximum total blocking voltage in the range of hundreds of kV. The inductor is an air-core reactor with a few mH inductance. The wave forms of a TCSC in capacitive boost mode are shown in figure 89.

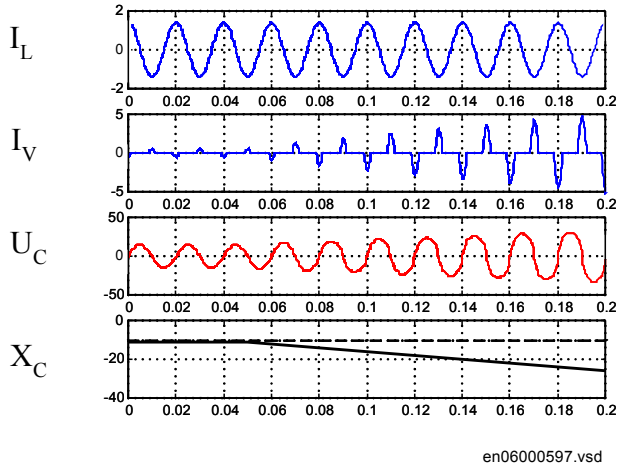

Figure 89: TCSC wave forms presented in capacitive boost mode for a typical 50Hz system

The apparent impedance of the TCSC (the impedance seen by the power system) can typically be increased to up to 3 times the physical impedance of the capacitor, see figure 90. This high apparent reactance will mainly be used for damping of power oscillations.

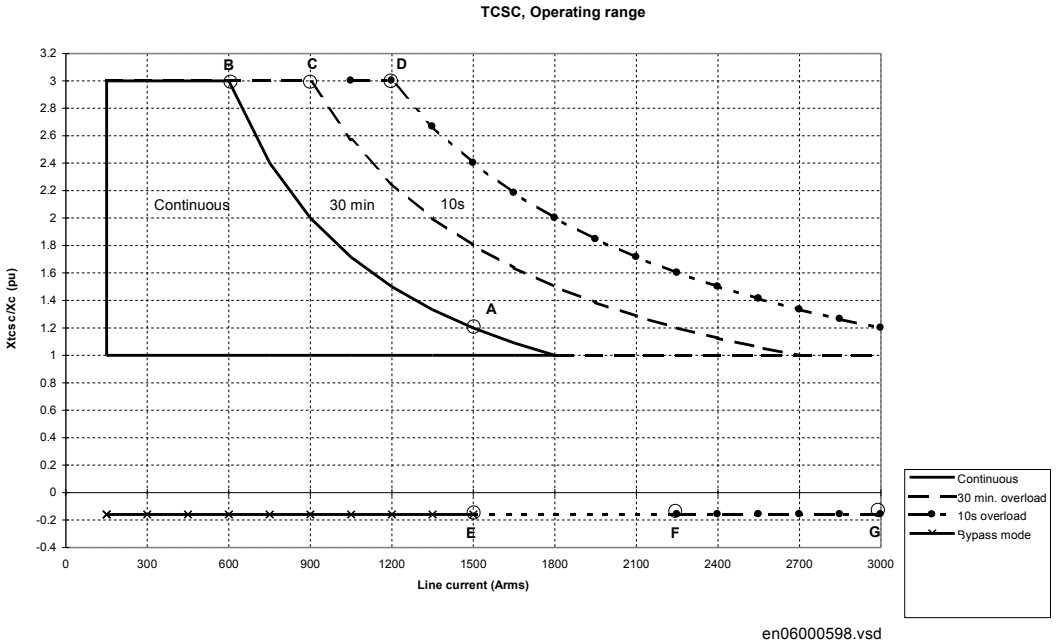

Figure 90: Operating range of a TCSC installed for damping of power oscillations (example)

During continuous valve bypass the TCSC represents an inductive impedance of about 20% of the capacitor impedance. Both operation in capacitive boost mode and valve bypass mode can be used for damping of power swings. The utilization of valve bypass increases the dynamic range of the TCSC and improves the TCSC effectiveness in power oscillation damping.

Challenges in protection of series compensated and adjacent power lines

System planning does not consider any more possible protection issues and difficulties, when deciding for a particular, non conventional solution of certain operation and stability problems. It is supposed that modern communication and state of the art computer technologies provides good basis for the required solution. This applies also to protection issues in series compensated networks. Different physical phenomena, which influence conventional principles of IED protection, like distance protection, phase comparison protection, are well known and accordingly considered in IED design. Some other issues, like influence of controlled thyristors in series capacitor banks are getting increased importance, although not as high as they would deserve.

The most important challenges, which influence the operation of different protection functions in the greatest extent, are described in this chapter.

Voltage and current inversion

Series capacitors influence the magnitude and the direction of fault currents in series compensated networks. They consequently influence phase angles of voltages measured in different points of series compensated networks and this performances of different protection functions, which have their operation based on properties of measured voltage and current phasors.

Voltage inversion

Figure 91 presents a part of series compensated line with reactance X_{L1} between the IED point and the fault in point F of series compensated line. The voltage measurement is supposed to be on the bus side, so that series capacitor appears between the IED point and fault on the protected line. Figure 92 presents the corresponding phasor diagrams for the cases with bypassed and fully inserted series capacitor.

Voltage distribution on faulty lossless serial compensated line from fault point F to the bus is linearly dependent on distance from the bus, if there is no capacitor included in scheme (as shown in figure 92). Voltage V_M measured at the bus is equal to voltage drop ΔV_L on the faulty line and lags the current I_F by 90 electrical degrees.

The situation changes with series capacitor included in circuit between the IED point and the fault position. The fault current I_F (see figure 92) is increased due to the series capacitor, generally decreases total impedance between the sources and the fault. The reactive voltage drop ΔV_L on X_{L1} line impedance leads the current by 90 degrees. Voltage drop ΔV_C on series capacitor lags the fault current by 90 degrees. Note that line impedance X_{L1} could be divided into two parts: one between the IED point and the capacitor and one between the capacitor and the fault position. The resulting voltage V_M in IED point is this way proportional to sum of voltage drops on partial impedances between the IED point and the fault position F, as presented by

$$V_M = I_F \cdot j\left(X_{L1} - X_C\right)$$

(Equation 121)

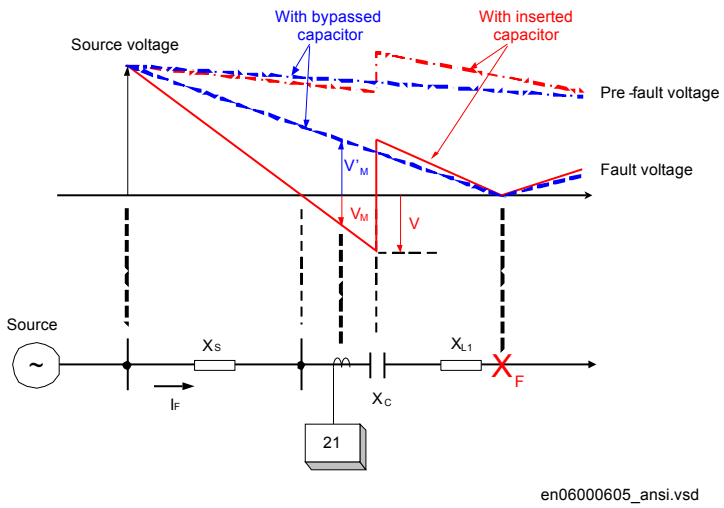

Figure 91: Voltage inversion on series compensated line

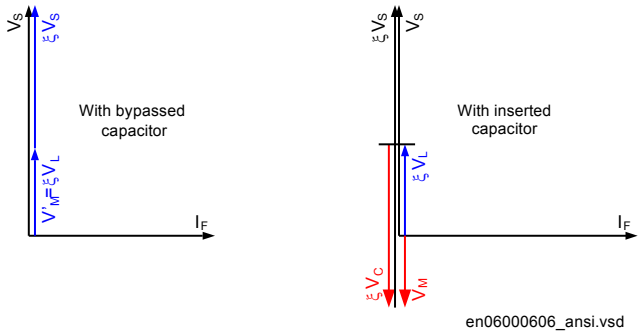

Figure 92: Phasor diagrams of currents and voltages for the bypassed and inserted series capacitor during voltage inversion

It is obvious that voltage V_M will lead the fault current I_F as long as $X_{L1} > X_C$. This situation corresponds, from the directionality point of view, to fault conditions on line without series capacitor. Voltage V_M in IED point will lag the fault current I_F in case when:

$$X_{L1} < X_C < X_S + X_{L1}$$

(Equation 122)

Where

X_S is the source impedance behind the IED

The IED point voltage inverses its direction due to presence of series capacitor and its dimension. It is a common practice to call this phenomenon voltage inversion. Its consequences on operation of different protections in series compensated networks depend on their operating principle. The most known effect has voltage inversion on directional measurement of distance IEDs (see chapter "Distance protection" for more details), which must for this reason comprise special measures against this phenomenon.

There will be no voltage inversion phenomena for reverse faults in system with VTs located on the bus side of series capacitor. The allocation of VTs to the line side does not eliminate the phenomenon, because it appears again for faults on the bus side of IED point.

Current inversion

Figure 93 presents part of a series compensated line with corresponding equivalent voltage source. It is generally anticipated that fault current I_F flows on non-compensated lines from power source towards the fault F on the protected line. Series capacitor may change the situation.

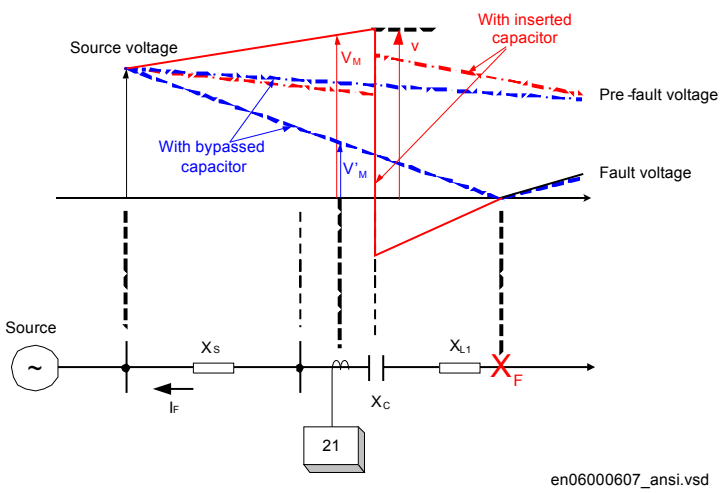

Figure 93: Current inversion on series compensated line

The relative phase position of fault current I_F compared to the source voltage V_S depends in general on the character of the resultant reactance between the source and the fault position. Two possibilities appear:

$$X_S - X_C + X_{L1} > 0$$
$$X_S - X_C + X_{L1} < 0$$

(Equation 123)

The first case corresponds also to conditions on non compensated lines and in cases, when the capacitor is bypassed either by spark gap or by the bypass switch, as shown in phasor diagram in figure 94. The resultant reactance is in this case of inductive nature and the fault currents lags source voltage by 90 electrical degrees.

The resultant reactance is of capacitive nature in the second case. Fault current will for this reason lead the source voltage by 90 electrical degrees, which means that reactive current will flow from series compensated line to the system. The system conditions are in such case presented by equation 124

$$X_C > X_S + X_{L1}$$

(Equation 124)

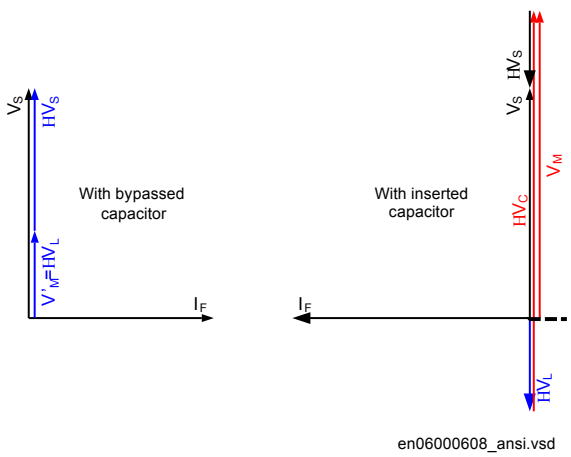

Figure 94: Phasor diagrams of currents and voltages for the bypassed and inserted series capacitor during current inversion

It is a common practice to call this phenomenon current inversion. Its consequences on operation of different protections in series compensated networks depend on their operating principle. The most known effect has current inversion on operation of distance IEDs (as shown in section "Distance protection" for more details), which cannot be used for the protection of series compensated lines with possible current inversion. Equation 124 shows also big dependence of possible current inversion on series compensated lines on location of series capacitors. $X_{L1} = 0$ for faults just behind the capacitor when located at line IED and only the source impedance prevents current inversion. Current inversion has been considered for many years only a theoretical possibility due to relatively low values of source impedances (big power plants) compared to the capacitor reactance. The possibility for current inversion in modern networks is increasing and must be studied carefully during system preparatory studies.

The current inversion phenomenon should not be studied only for the purposes of protection devices measuring phase currents. Directional comparison protections,

based on residual (zero sequence) and negative sequence currents should be considered in studies as well. Current inversion in zero sequence systems with low zero sequence source impedance (a number of power transformers connected in parallel) must be considered as practical possibility in many modern networks.

Low frequency transients

Series capacitors introduce in power systems oscillations in currents and voltages, which are not common in non-compensated systems. These oscillations have frequencies lower than the rated system frequency and may cause delayed increase of fault currents, delayed operation of spark gaps as well as, delayed operation of protective IEDs. The most obvious difference is generally seen in fault currents. Figure 95 presents a simplified picture of a series compensated network with basic line parameters during fault conditions. We study the basic performances for the same network with and without series capacitor. Possible effects of spark gap flashing or MOV conducting are neglected. The time dependence of fault currents and the difference between them are of interest.

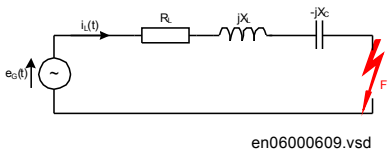

Figure 95: Simplified equivalent scheme of SC network during fault conditions

We consider the instantaneous value of generator voltage following the sine wave according to equation 125

$$e_G = E_G \cdot \sin\left(\omega \cdot t + \lambda\right)$$

(Equation 125)

The basic loop differential equation describing the circuit in figure 95 without series capacitor is presented by equation 126

$$L_L \cdot \frac{di_L}{dt} + R_L \cdot i_L = E_G \cdot \sin\left(\omega \cdot t + \lambda\right)$$

(Equation 126)

The solution over line current is presented by group of equations 127

$$i_L = \frac{E_G}{Z} \cdot \sin\left(\omega \cdot t + \lambda - \varphi\right) + \left[I_{L(t=0)} - \frac{E_G}{Z} \cdot \sin\left(\lambda - \varphi\right) \right] \cdot e^{-t \cdot \frac{R_L}{L_L}}$$

$$Z = \sqrt{R_L{}^2 + \left(\omega \cdot L_L\right)^2}$$

$$\varphi = atg\left(\frac{\omega \cdot L_L}{R_L}\right)$$

(Equation 127)

The line fault current consists of two components:

- The steady-state component which magnitude depends on generator voltage and absolute value of impedance included in the circuit
- The transient DC component, which magnitude depends on the fault incident angle decays with the circuit time constant

$$L_L / R_L \left[s\right]$$

(Equation 128)

The basic loop differential equation describing the circuit in figure 95 with series capacitor is presented by equation 129.

$$L_L \cdot \frac{d^2 i_l}{dt^2} + R_L \cdot \frac{di_L}{dt} + \frac{1}{C_L} i_L(t) = E_G \cdot \omega \cdot \cos\left(\omega \cdot t + \lambda\right)$$

(Equation 129)

The solution over line current is in this case presented by group of equations 130. The fault current consists also here from the steady-state part and the transient part. The difference with non-compensated conditions is that

- The total loop impedance decreases for the negative reactance of the series capacitor, which in fact increases the magnitude of the fault current
- The transient part consists of the damped oscillation, which has an angular frequency β and is dying out with a time constant α

$$i_L = \frac{E_G}{Z_{SC}} \cdot \sin\left(\omega \cdot t + \lambda - \varphi\right) + \left[K_1 \cdot \cos\left(\beta \cdot t\right) + K_2 \cdot \sin\left(\beta \cdot t\right)\right] \cdot e^{-\alpha \cdot t}$$

$$Z_{SC} = \sqrt{R_L{}^2 + \left(\omega \cdot L_L - \frac{1}{\omega \cdot C_L}\right)^2}$$

$$K_1 = I_{L(t=0)} - \frac{E_G}{Z_{SC}} \cdot \sin\left(\lambda - \varphi\right)$$

$$K_2 = \frac{1}{\beta \cdot L_L}\left[\begin{array}{l} E_G \cdot \sin\left(\lambda\right) - V_{C(t=0)} - \frac{R_L}{2} \cdot I_{L(t=0)} - \frac{E_G \cdot \omega \cdot L_L}{Z_{SC}} \cdot \cos\left(\lambda - \varphi\right) - \\ - \frac{E_G \cdot R_L}{2 \cdot Z_{SC}} \cdot \sin\left(\lambda - \varphi\right) \end{array}\right]$$

$$\alpha = \frac{R_L}{2 \cdot L_L}$$

$$\beta = \sqrt{\frac{1}{L_L \cdot C_L} - \frac{R_L^2}{4 \cdot L_L^2}}$$

(Equation 130)

The transient part has an angular frequency β and is damped out with the time-constant □.

The difference in performance of fault currents for a three-phase short circuit at the end of a typical 500 km long 500 kV line is presented in figure 96.

The short circuit current on a non-compensated line is lower in magnitude, but comprises at the beginning only a transient DC component, which diminishes completely in approximately 120ms. The final magnitude of the fault current on compensated line is higher due to the decreased apparent impedance of a line (60% compensation degree has been considered for a particular case), but the low frequency oscillation is also obvious. The increase of fault current immediately after the fault incidence (on figure 96 at approximately 21ms) is much slower than on non-compensated line. This occurs due to the energy stored in capacitor before the fault.

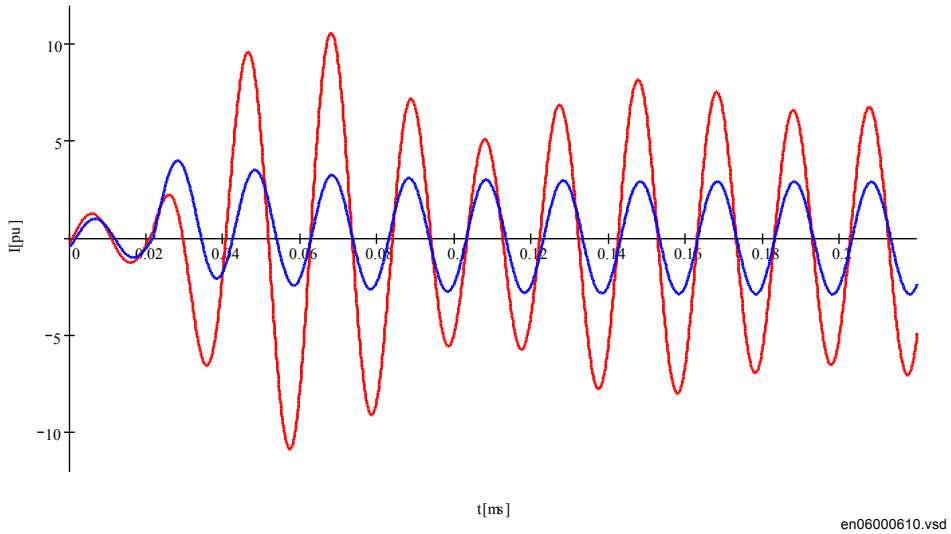

Figure 96: Short circuit currents for the fault at the end of 500 km long 500 kV line without and with SC

Location of instrument transformers

Location of instrument transformers relative to the line end series capacitors plays an important role regarding the dependability and security of a complete protection scheme. It is on the other hand necessary to point out the particular dependence of those protection schemes, which need for their operation information on voltage in IED point.

Protection schemes with their operating principle depending on current measurement only, like line current differential protection are relatively independent on CT location. Figure 97 shows schematically the possible locations of instrument transformers related to the position of line-end series capacitor.

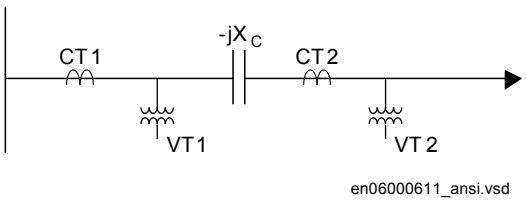

Figure 97: Possible positions of instrument transformers relative to line end series capacitor

Bus side instrument transformers

CT1 and VT1 on figure 97 represent the case with bus side instrument transformers. The protection devices are in this case exposed to possible voltage and current inversion for line faults, which decreases the required dependability. In addition to this may series capacitor cause negative apparent impedance to distance IEDs on protected and adjacent lines as well for close-in line faults (see also figure 99 LOC=0%), which requires special design of distance measuring elements to cope with such phenomena. The advantage of such installation is that the protection zone covers also the series capacitor as a part of protected power line, so that line protection will detect and cleared also parallel faults on series capacitor.

Line side instrument transformers

CT2 and VT2 on figure 97 represent the case with line side instrument transformers. The protective devices will not be exposed to voltage and current inversion for faults on the protected line, which increases the dependability. Distance protection zone 1 may be active in most applications, which is not the case when the bus side instrument transformers are used.

Distance IEDs are exposed especially to voltage inversion for close-in reverse faults, which decreases the security. The effect of negative apparent reactance must be studied seriously in case of reverse directed distance protection zones used by distance IEDs for teleprotection schemes. Series capacitors located between the voltage instruments transformers and the buses reduce the apparent zero sequence source impedance and may cause voltage as well as current inversion in zero sequence equivalent networks for line faults. It is for this reason absolutely necessary to study the possible effect on operation of zero sequence directional ground-fault overcurrent protection before its installation.

Dual side instrument transformers

Installations with line side CT2 and bus side VT1 are not very common. More common are installations with line side VT2 and bus side CT1. They appear as de facto installations also in switchyards with double-bus double-breaker and breaker-and-a-half arrangement. The advantage of such schemes is that the unit protections cover also for shunt faults in series capacitors and at the same time the voltage inversion does not appear for faults on the protected line.

Many installations with line-end series capacitors have available voltage instrument transformers on both sides. In such case it is recommended to use the VTs for each particular protection function to best suit its specific characteristics and expectations on dependability and security. The line side VT can for example be used by the distance protection and the bus side VT by the directional residual OC ground fault protection.

Apparent impedances and MOV influence

Series capacitors reduce due to their character the apparent impedance measured by distance IEDs on protected power lines. Figure 98 presents typical locations of capacitor banks on power lines together with corresponding compensation degrees.

Distance IED near the feeding bus will see in different cases fault on remote end bus depending on type of overvoltage protection used on capacitor bank (spark gap or MOV) and SC location on protected power line.

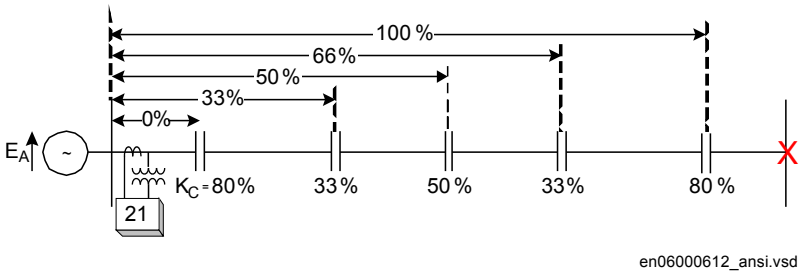

Figure 98: Typical locations of capacitor banks on series compensated line

Implementation of spark gaps for capacitor overvoltage protection makes the picture relatively simple, because they either flash over or not. The apparent impedance corresponds to the impedance of non-compensated line, as shown in figure 99 case K_C = 0%.

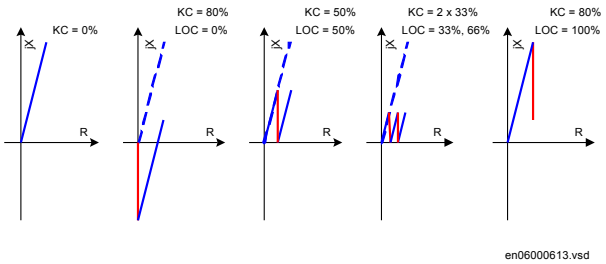

Figure 99: Apparent impedances seen by distance IED for different SC locations and spark gaps used for overvoltage protection

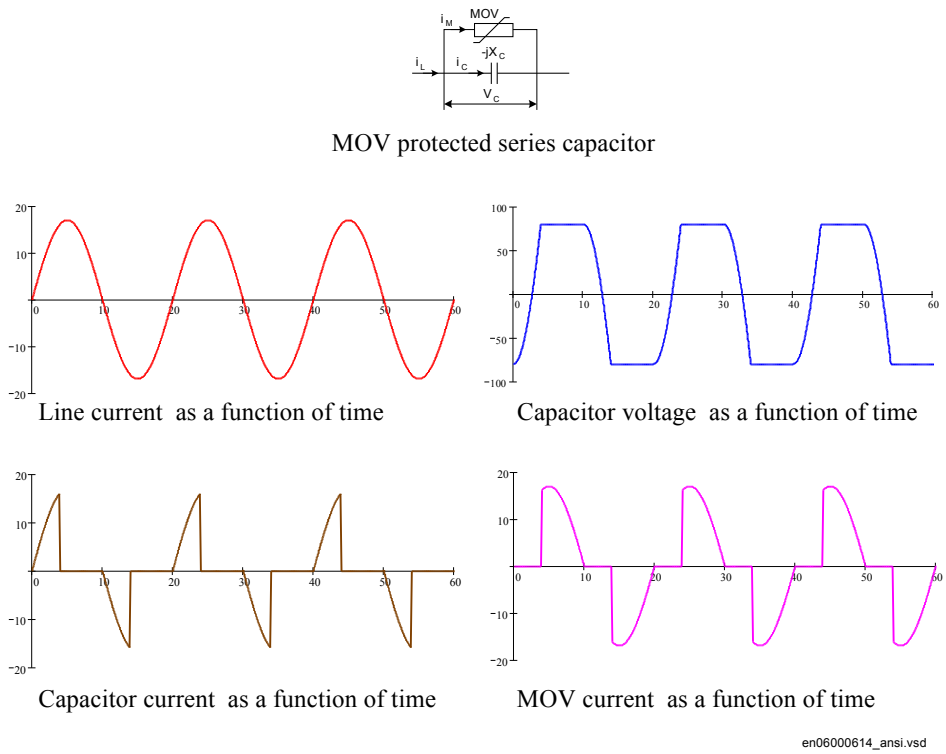

Figure 100: MOV protected capacitor with examples of capacitor voltage and corresponding currents

The impedance apparent to distance IED is always reduced for the amount of capacitive reactance included between the fault and IED point, when the spark gap does not flash over, as presented for typical cases in figure 99. Here it is necessary to distinguish between two typical cases:

- Series capacitor only reduces the apparent impedance, but it does not cause wrong directional measurement. Such cases are presented in figure 99 for 50% compensation at 50% of line length and 33% compensation located on 33% and 66% of line length. The remote end compensation has the same effect.
- The voltage inversion occurs in cases when the capacitor reactance between the IED point and fault appears bigger than the corresponding line reactance, Figure 23, 80% compensation at local end. A voltage inversion occurs in IED point and the distance IED will see wrong direction towards the fault, if no special measures have been introduced in its design.

The situation differs when metal oxide varistors (MOV) are used for capacitor overvoltage protection. MOVs conduct current, for the difference of spark gaps, only when the instantaneous voltage drop over the capacitor becomes higher than the protective voltage level in each half-cycle separately, see figure 100.

Extensive studies at Bonneville Power Administration in USA (*ref. Goldsworthy, D,L "A Linearized Model for MOV-Protected series capacitors" Paper 86SM357–8 IEEE/ PES summer meeting in Mexico City July 1986*) have resulted in construction of a non-linear equivalent circuit with series connected capacitor and resistor. Their value depends on complete line (fault) current and protection factor k_p. The later is defined by equation 131.

$$k_p = \frac{V_{MOV}}{U_{NC}}$$

(Equation 131)

Where

U_{MOV} is the maximum instantaneous voltage expected between the capacitor immediately before the MOV has conducted or during operation of the MOV, divaded by √2

U_{NC} is the rated voltage in RMS of the series capacitor

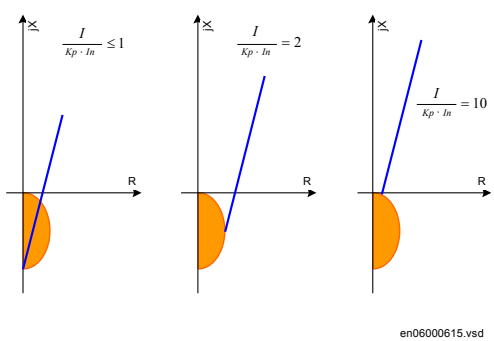

Figure 101: Equivalent impedance of MOV protected capacitor in dependence of protection factor K_P

Figure 101 presents three typical cases for series capacitor located at line end (case LOC=0% in figure 99).

- Series capacitor prevails the scheme as long as the line current remains lower or equal to its protective current level ($I \leq k_p \cdot I_{NC}$). Line apparent impedance is in this case reduced for the complete reactance of a series capacitor.

- 50% of capacitor reactance appears in series with resistance, which corresponds to approximately 36% of capacitor reactance when the line current equals two times the protective current level ($I \leq 2 \cdot k_p \cdot I_{NC}$). This information has high importance for setting of distance protection IED reach in resistive direction, for phase to ground fault measurement as well as for phase to phase measurement.

- Series capacitor becomes nearly completely bridged by MOV when the line current becomes higher than 10-times the protective current level ($I \leq 10 \cdot k_p \cdot I_{NC}$).

Impact of series compensation on protective IED of adjacent lines

Voltage inversion is not characteristic for the buses and IED points closest to the series compensated line only. It can spread also deeper into the network and this way influences the selection of protection devices (mostly distance IEDs) on remote ends of lines adjacent to the series compensated circuit, and sometimes even deeper in the network.

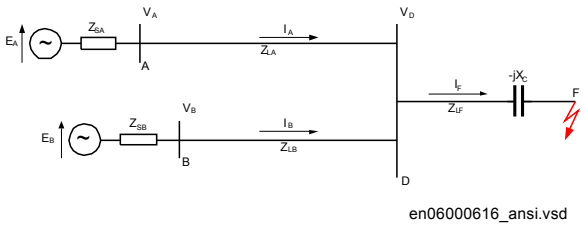

Figure 102: Voltage inversion in series compensated network due to fault current infeed

Voltage at the B bus (as shown in figure 102) is calculated for the loss-less system according to the equation below.

$$V_B = V_D + I_B \cdot jX_{LB} = \left(I_A + I_B\right) \cdot j\left(X_{LF} - X_C\right) + I_B \cdot jX_{LB}$$

(Equation 132)

Further development of equation 132 gives the following expressions:

$$V_B = jI_B \cdot \left[X_{LB} + \left(1 + \frac{I_A}{I_B}\right) \cdot \left(X_{LF} - X_C\right)\right]$$

(Equation 133)

$$X_C\left(V_B = 0\right) = \frac{X_{LB}}{1 + \frac{I_A}{I_B}} + X_{LF}$$

(Equation 134)

Equation 133 indicates the fact that the infeed current I_A increases the apparent value of capacitive reactance in system: bigger the infeed of fault current, bigger the apparent series capacitor in a complete series compensated network. It is possible to say that

equation 134 indicates the deepness of the network to which it will feel the influence of series compensation through the effect of voltage inversion.

It is also obvious that the position of series capacitor on compensated line influences in great extent the deepness of voltage inversion in adjacent system. Line impedance X_{LF} between D bus and the fault becomes equal to zero, if the capacitor is installed near the bus and the fault appears just behind the capacitor. This may cause the phenomenon of voltage inversion to be expanded very deep into the adjacent network, especially if on one hand the compensated line is very long with high degree of compensation, and the adjacent lines are, on the other hand, relatively short.

Extensive system studies are necessary before final decision is made on implementation and location of series capacitors in network. It requires to correctly estimate their influence on performances of (especially) existing distance IEDs. It is possible that the costs for number of protective devices, which should be replaced by more appropriate ones due to the effect of applied series compensation, influences the future position of series capacitors in power network.

Possibilities for voltage inversion at remote buses should not be studied for short circuits with zero fault resistance only. It is necessary to consider cases with higher fault resistances, for which spark gaps or MOVs on series capacitors will not conduct at all. At the same time this kind of investigation must consider also the maximum sensitivity and possible resistive reach of distance protection devices, which on the other hand simplifies the problem.

Application of MOVs as non-linear elements for capacitor overvoltage protection makes simple calculations often impossible. Different kinds of steady-state network simulations are in such cases unavoidable.

Distance protection

Distance protection due to its basic characteristics, is the most used protection principle on series compensated and adjacent lines worldwide. It has at the same time caused a lot of challenges to protection society, especially when it comes to directional measurement and transient overreach.

Distance IED in fact does not measure impedance or quotient between line current and voltage. Quantity 1= Operating quantity - Restraing quantity Quantity 2= Polarizing quantity. Typically Operating quantity is the replica impedance drop. Restraining quantity is the system voltage Polarizing quantity shapes the characteristics in different way and is not discussed here.

Distance IEDs comprise in their replica impedance only the replicas of line inductance and resistance, but they do not comprise any replica of series capacitor on the protected line and its protection circuits (spark gap and or MOV). This way they form wrong picture of the protected line and all “solutions” related to distance protection of series compensated and adjacent lines are concentrated on finding some parallel ways, which

may help eliminating the basic reason for wrong measurement. The most known of them are decrease of the reach due to presence of series capacitor, which apparently decreases the line reactance, and introduction of permanent memory voltage in directional measurement.

Series compensated and adjacent lines are often the more important links in a transmission networks and delayed fault clearance is undesirable. This makes it necessary to install distance protection in combination with telecommunication. The most common is distance protection in Permissive Overreaching Transfer Trip mode (POTT).

Underreaching and overreaching schemes

It is a basic rule that the underreaching distance protection zone should under no circumstances overreach for the fault at the remote end bus, and the overreaching zone should always, under all system conditions, cover the same fault. In order to obtain section selectivity, the first distance (underreaching) protection zone must be set to a reach less than the reactance of the compensated line in accordance with figure 103.

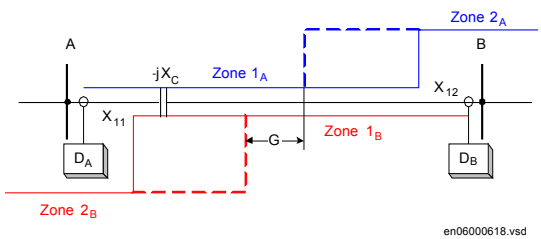

Figure 103: Underreaching (Zone 1) and overreaching (Zone 2) on series compensated line

The underreaching zone will have reduced reach in cases of bypassed series capacitor, as shown in the dashed line in figure 103. The overreaching zone (Zone 2) can this way cover bigger portion of the protected line, but must always cover with certain margin the remote end bus. Distance protection Zone 1 is often set to

$$X_{Z1} = K_S \cdot \left(X_{11} + X_{12} - X_C \right)$$

(Equation 135)

Here K_S is a safety factor, presented graphically in figure 104, which covers for possible overreaching due to low frequency (sub-harmonic) oscillations. Here it should be noted separately that compensation degree K_C in figure 104 relates to total system reactance, inclusive line and source impedance reactance. The same setting applies regardless MOV or spark gaps are used for capacitor overvoltage protection.

Equation 135 is applicable for the case when the VTs are located on the bus side of series capacitor. It is possible to remove X_C from the equation in cases of VTs installed in line side, but it is still necessary to consider the safety factor K_S .

If the capacitor is out of service or bypassed, the reach with these settings can be less than 50% of protected line dependent on compensation degree and there will be a section, G in figure 103, of the power line where no tripping occurs from either end.

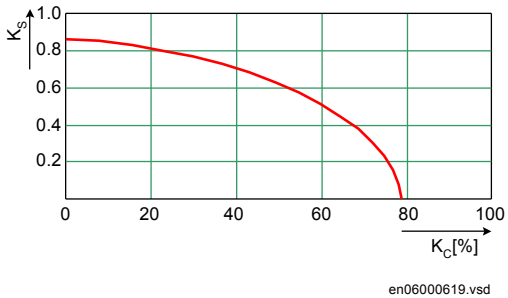

Figure 104: Underreaching safety factor K_S in dependence on system compensation degree K_C

For that reason permissive underreaching schemes can hardly be used as a main protection. Permissive overreaching distance protection or some kind of directional or unit protection must be used.

The overreach must be of an order so it overreaches when the capacitor is bypassed or out of service. Figure 105 shows the permissive zones. The first underreaching zone can be kept in the total protection but it only has the feature of a back-up protection for close up faults. The overreach is usually of the same order as the permissive zone. When the capacitor is in operation the permissive zone will have a very high degree of overreach which can be considered as a disadvantage from a security point of view.

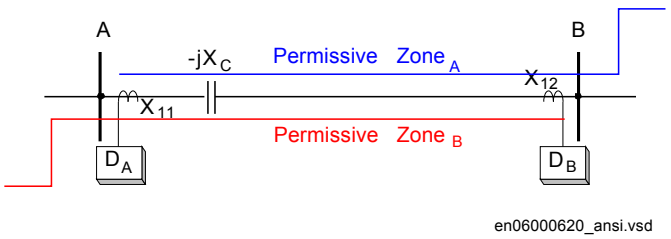

Figure 105: Permissive overreach distance protection scheme

Negative IED impedance, positive fault current (voltage inversion)

Assume in equation 136

$$X_{11} < X_C < X_S + X_{11}$$

(Equation 136)

and in figure 106

a three phase fault occurs beyond the capacitor. The resultant IED impedance seen from the D_B IED location to the fault may become negative (voltage inversion) until the spark gap has flashed.

Distance protections of adjacent power lines shown in figure 106 are influenced by this negative impedance. If the intermediate infeed of short circuit power by other lines is taken into consideration, the negative voltage drop on X_C is amplified and a protection far away from the faulty line can maloperate by its instantaneous operating distance zone, if no precaution is taken. Impedances seen by distance IEDs on adjacent power lines are presented by equations 137 to 140.

$$I = I_1 + I_2 + I_3$$

(Equation 137)

$$X_{DA1} = X_{A1} - \frac{I_F}{I_{A1}} \cdot \left(X_C - X_{11} \right)$$

(Equation 138)

$$X_{DA2} = X_{A2} - \frac{I_F}{I_{A2}} \cdot \left(X_C - X_{11} \right)$$

(Equation 139)

$$X_{DA3} = X_{A3} - \frac{I_F}{I_{A3}} \cdot \left(X_C - X_{11} \right)$$

(Equation 140)

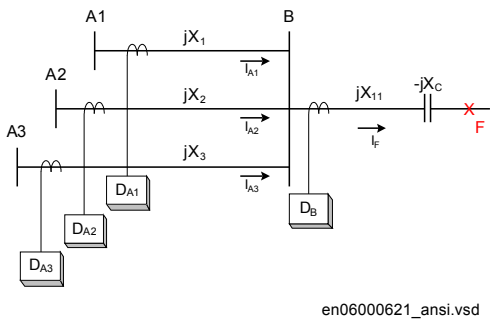

Figure 106: Distance IED on adjacent power lines are influenced by the negative impedance

Normally the first zone of this protection must be delayed until the gap flashing has taken place. If the delay is not acceptable, some directional comparison must also be added to the protection of all adjacent power lines. As stated above, a good protection system must be able to operate correctly both before and after gap flashing occurs. Distance protection can be used, but careful studies must be made for each individual case. The rationale described applies to both conventional spark gap and MOV protected capacitors.

Special attention should be paid to selection of distance protection on shorter adjacent power lines in cases of series capacitors located at the line end. In such case the reactance of a short adjacent line may be lower than the capacitor reactance and voltage inversion phenomenon may occur also on remote end of adjacent lines. Distance protection of such line must have built-in functionality which applies normally to protection of series compensated lines.

It usually takes a bit of a time before the spark gap flashes, and sometimes the fault current will be of such a magnitude that there will not be any flashover and the negative impedance will be sustained. If equation 141

$$X_{11} < X_C < X_S + X_{11}$$

(Equation 141)

in figure 107, the fault current will have the same direction as when the capacitor is bypassed. So, the directional measurement is correct but the impedance measured is negative and if the characteristic crosses the origin shown in figure 107 the IED cannot operate. However, if there is a memory circuit designed so it covers the negative impedance, a three phase fault can be successfully cleared by the distance protection. As soon as the spark gap has flashed the situation for protection will be as for an

ordinary fault. However, a good protection system should be able to operate correctly before and after gap flashing occurs.

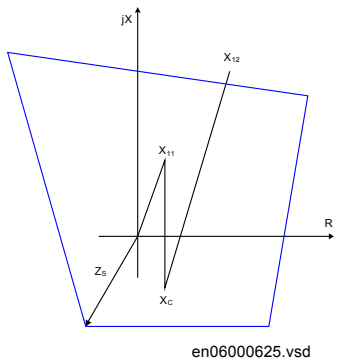

Figure 107: Cross-polarized quadrilateral characteristic

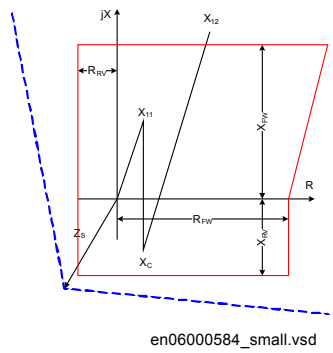

Figure 108: Quadrilateral characteristic with separate impedance and directional measurement

If the distance protection is equipped with a ground-fault measuring unit, the negative impedance occurs when

$$\left|3 \cdot X_C\right| > \left|2 \cdot X_{1\_11} + X_{0\_11}\right|$$

(Equation 142)

Cross-polarized distance protection (either with mho or quadrilateral characteristic) will normally handle ground-faults satisfactory if the negative impedance occurs inside the characteristic. The operating area for negative impedance depends upon the magnitude of the source impedance and calculations must be made on a case by case basis, as shown in figure 107. Distance IEDs with separate impedance and directional measurement offer additional setting and operational flexibility when it comes to measurement of negative apparent impedance (as shown in figure 108).

Negative IED impedance, negative fault current (current inversion)

If equation 143

$$XC > X_S + X_{l1}$$

(Equation 143)

in figure 93 and a fault occurs behind the capacitor, the resultant reactance becomes negative and the fault current will have an opposite direction compared with fault current in a power line without a capacitor (current inversion). The negative direction of the fault current will persist until the spark gap has flashed. Sometimes there will be no flashover at all, because the fault current is less than the setting value of the spark gap. The negative fault current will cause a high voltage on the network. The situation will be the same even if a MOV is used. However, depending upon the setting of the MOV, the fault current will have a resistive component.

The problems described here are accentuated with a three phase or phase-to-phase fault, but the negative fault current can also exist for a single-phase fault. The condition for a negative current in case of an ground fault can be written as follows:

$$\left|3 \cdot X_C\right| > \left|2 \cdot X_{1\_L1} + X_{0\_L1} + 2 \cdot X_{0\_S} + X_{1\_S}\right|$$

(Equation 144)

All designations relates to figure 93. A good protection system must be able to cope with both positive and negative direction of the fault current, if such conditions can occur. A distance protection cannot operate for negative fault current. The directional element gives the wrong direction. Therefore, if a problem with negative fault current exists, distance protection is not a suitable solution. In practice, negative fault current seldom occurs. In normal network configurations the gaps will flash in this case.

Double circuit, parallel operating series compensated lines

Two parallel power lines running in electrically close vicinity to each other and ending at the same busbar at both ends (as shown in figure 109) causes some challenges for distance protection because of the mutual impedance in the zero sequence system. The current reversal phenomenon also raises problems from the protection point of view, particularly when the power lines are short and when permissive overreach schemes are used.

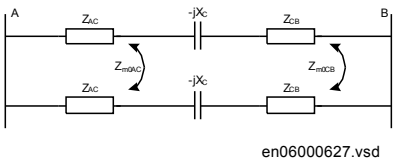

Figure 109: Double circuit, parallel operating line

Zero sequence mutual impedance Z_{m0} cannot significantly influence the operation of distance protection as long as both circuits are operating in parallel and all precautions related to settings of distance protection on series compensated line have been considered. Influence of disconnected parallel circuit, which is grounded at both ends, on operation of distance protection on operating circuit is known.

Series compensation additionally exaggerates the effect of zero sequence mutual impedance between two circuits, see figure 110. It presents a zero sequence equivalent circuit for a fault at B bus of a double circuit line with one circuit disconnected and grounded at both IEDs. The effect of zero sequence mutual impedance on possible overreaching of distance IEDs at A bus is increased compared to non compensated operation, because series capacitor does not compensate for this reactance. The reach of underreaching distance protection zone 1 for phase-to-ground measuring loops must further be decreased for such operating conditions.

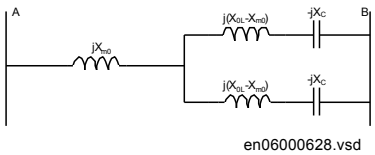

Figure 110: Zero sequence equivalent circuit of a series compensated double circuit line with one circuit disconnected and grounded at both IEDs

Zero sequence mutual impedance may disturb also correct operation of distance protection for external evolving faults, when one circuit has already been disconnected in one phase and runs non-symmetrical during dead time of single pole autoreclosing cycle. All such operating conditions must carefully be studied in advance and simulated by dynamic simulations in order to fine tune settings of distance IEDs.

If the fault occurs in point F of the parallel operating circuits, as presented in figure 111, than also one distance IED (operating in POTT teleprotection scheme) on parallel, healthy circuit will send a carrier signal CSAB to the remote line end, where this signal will be received as a carrier receive signal CRBB.

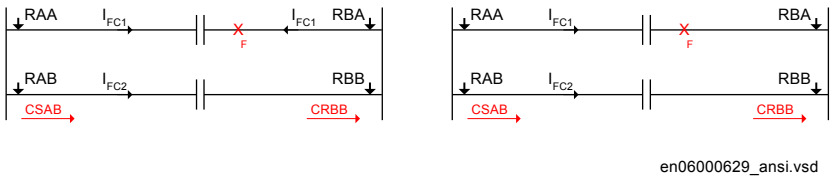

Figure 111: Current reversal phenomenon on parallel operating circuits

It is possible to expect faster IED operation and breaker opening at the bus closer to fault, which will reverse the current direction in healthy circuit. Distance IED RBB will suddenly detect fault in forward direction and, if CRBB signal is still present due to long reset time of IED RAB and especially telecommunication equipment, trip its related circuit breaker, since all conditions for POTT have been fulfilled. Zero sequence mutual impedance will additionally influence this process, since it increases the magnitude of fault current in healthy circuit after the opening of first circuit breaker. The so called current reversal phenomenon may cause unwanted operation of

protection on healthy circuit and this way endangers even more the complete system stability.

To avoid the unwanted tripping, some manufacturers provide a feature in their distance protection which detects that the fault current has changed in direction and temporarily blocks distance protection. Another method employed is to temporarily block the signals received at the healthy line as soon as the parallel faulty line protection initiates tripping. The second mentioned method has an advantage in that not the whole protection is blocked for the short period. The disadvantage is that a local communication is needed between two protection devices in the neighboring bays of the same substation.

Distance protection used on series compensated lines must have a high overreach to cover the whole transmission line also when the capacitors are bypassed or out of service. When the capacitors are in service, the overreach will increase tremendously and the whole system will be very sensitive for false teleprotection signals. Current reversal difficulties will be accentuated because the ratio of mutual impedance against self-impedance will be much higher than for a non-compensated line.

If non-unit protection is to be used in a directional comparison mode, schemes based on negative sequence quantities offer the advantage that they are insensitive to mutual coupling. However, they can only be used for phase-to-ground and phase-to-phase faults. For three-phase faults an additional protection must be provided.

3.6.2.2 Setting guidelines

General

The settings for the distance protection function are done in primary values. The instrument transformer ratio that has been set for the analog input card is used to automatically convert the measured secondary input signals to primary values used in the distance protection function.

The following basics should be considered, depending on application, when doing the setting calculations:

- Errors introduced by current and voltage instrument transformers, particularly under transient conditions.
- Inaccuracies in the line zero-sequence impedance data, and their effect on the calculated value of the ground-return compensation factor.
- The effect of infeed between the IED and the fault location, including the influence of different Z0/Z1 ratios of the various sources.

- The phase impedance of non transposed lines is not identical for all fault loops. The difference between the impedances for different phase-to-ground loops can be as large as 5-10% of the total line impedance.
- The effect of a load transfer between the IEDs of the protected fault resistance is considerable, the effect must be recognized.
- Zero-sequence mutual coupling from parallel lines.

Setting of zone1

The different errors mentioned earlier usually require a limitation of the underreaching zone (normally zone 1) to 75 - 90% of the protected line.

In case of parallel lines, consider the influence of the mutual coupling according to section "Parallel line application with mutual coupling" and select the case(s) that are valid in your application. We recommend to compensate setting for the cases when the parallel line is in operation, out of service and not grounded and out of service and grounded in both ends. The setting of ground fault reach should be selected to be <85% also when parallel line is out of service and grounded at both ends (worst case).

Setting of overreaching zone

The first overreaching zone (normally zone2) must detect faults on the whole protected line. Considering the different errors that might influence the measurement in the same way as for zone1, it is necessary to increase the reach of the overreaching zone to at least 120% of the protected line. The zone2 reach can be even higher if the fault infeed from adjacent lines at remote end are considerable higher than the fault current at the IED location.

The setting must not exceed 80% of the following impedances:

- The impedance corresponding to the protected line, plus the first zone reach of the shortest adjacent line.
- The impedance corresponding to the protected line, plus the impedance of the maximum number of transformers operating in parallel on the bus at the remote end of the protected line.

If the requirements in the bullet—listed paragraphs above gives a zone2 reach less than 120%, the time delay of zone2 must be increased by approximately 200ms to avoid unwanted operation in cases when the telecommunication for the short adjacent line at remote end is down during faults. The zone2 must not be reduced below 120% of the protected line section. The whole line must be covered under all conditions.

The requirement that the zone 2 shall not reach more than 80% of the shortest adjacent line at remote end is highlighted with a simple example below.

If a fault occurs at point F (as shown in figure 112, also for the explanation of all abbreviations used), the IED at point A senses the impedance:

$$\overline{Z}_{AF} = \overline{Z}_{AC} + \frac{\overline{I}_A + \overline{I}_B}{\overline{I}_A} \cdot \overline{Z}_{CF} = \overline{Z}_{AC} + \left(1 + \frac{\overline{I}_B}{\overline{I}_A}\right) \cdot \overline{Z}_{CF}$$

(Equation 145)

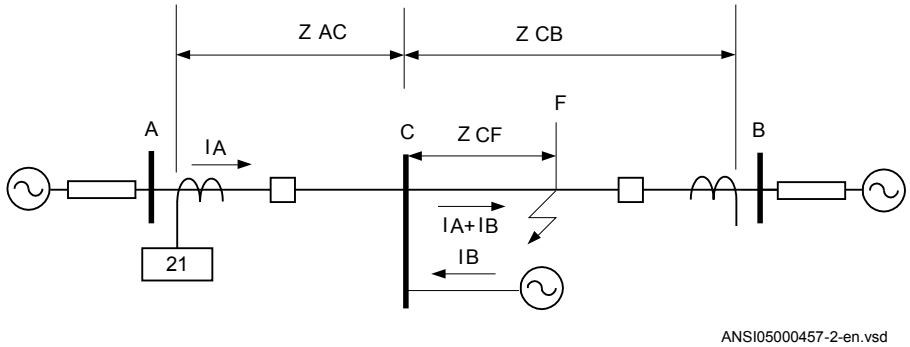

Figure 112:

Setting of reverse zone

The reverse zone is applicable for purposes of scheme communication logic, current reversal logic, weak-end-infeed logic, and so on. The same applies to the back-up protection of the bus bar or power transformers. It is necessary to secure, that it always covers the overreaching zone, used at the remote line IED for the telecommunication purposes.

Consider the possible enlarging factor that might exist due to fault infeed from adjacent lines. Equation 146 can be used to calculate the reach in reverse direction when the zone is used for blocking scheme, weak-end infeed and so on.

$$\text{Zrev} \geq 1.2 \cdot \left|\text{ZL-Z2rem}\right|$$

(Equation 146)

Where:

ZL is the protected line impedance

Z2rem is zone2 setting at remote end of protected line.

In some applications it might be necessary to consider the enlarging factor due to fault current infeed from adjacent lines in the reverse direction to obtain certain sensitivity.

Series compensated and adjacent lines

Directional control

The directional function (ZDSRDIR) which is able to cope with the condition at voltage reversal, shall be used in all IEDs with conventional distance protection (ZMCPDIS,ZMCAPDIS, 21). This function is necessary in the protection on compensated lines as well as all non-compensated lines connected to this busbar (adjacent lines). All protections that can be exposed to voltage reversal must have the special directional function, including the protections on busbar where the voltage can be reversed by series compensated lines not terminated to this busbar.

The directional function is controlled by faulty phase criteria. These criteria must identify all forward and reverse faults that can cause voltage reversal. Setting of the corresponding reach of the impedance measuring elements is separate for reactive and resistive reach and independent of each other for phase-to-ground and for phase-to-phase measurement.

It is also necessary to consider the minimum load impedance limiting conditions:

Setting of zone 1

A voltage reversal can cause an artificial internal fault (voltage zero) on faulty line as well as on the adjacent lines. This artificial fault always have a resistive component, this is however small and can mostly not be used to prevent tripping of a healthy adjacent line.

An independent tripping zone 1 facing a bus which can be exposed to voltage reversal have to be set with reduced reach with respect to this false fault. When the fault can move and pass the bus, the zone 1 in this station must be blocked. Protection further out in the net must be set with respect to this apparent fault as the protection at the bus.

Different settings of the reach for the zone (ZMCPDIS, 21) characteristic in forward and reverse direction makes it possible to optimize the settings in order to maximize dependability and security for independent zone1.

Due to the sub-harmonic oscillation swinging caused by the series capacitor at fault conditions the reach of the under-reaching zone 1 must be further reduced. Zone 1 can only be set with a percentage reach to the artificial fault according to the curve in 113

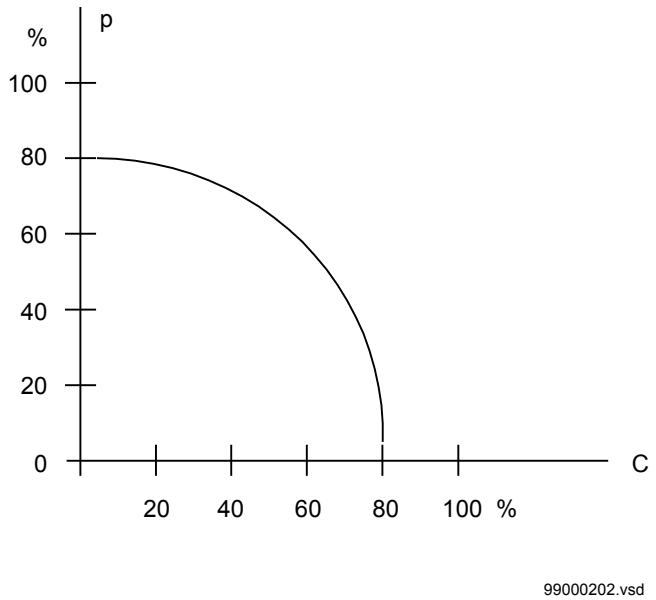

Figure 113: Reduced reach due to the expected sub-harmonic oscillations at different degrees of compensation

$$c = \text{degree of compensation}\left(\frac{X_c}{X_l}\right)$$

(Equation 147)

X_c is the reactance of the series capacitor

p is the maximum allowable reach for an under-reaching zone with respect to the sub-harmonic swinging related to the resulting fundamental frequency reactance the zone is not allowed to over-reach.

The degree of compensation C in figure 113 has to be interpreted as the relation between series capacitor reactance X_C and the total positive sequence reactance X1 to the driving source to the fault. If only the line reactance is used the degree of compensation will be too high and the zone 1 reach unnecessary reduced. The highest degree of compensation will occur at three phase fault and therefore the calculation need only to be performed for three phase faults.

The compensation degree in ground return path is different than in phases. It is for this reason possible to calculate a compensation degree separately for the phase-to-phase and three-phase faults on one side and for the single phase-to-ground fault loops on the other side. Different settings of the reach for the ph-ph faults and ph-G loops makes it possible to minimise the necessary decrease of the reach for different types of faults.

Reactive Reach

Compensated lines with the capacitor into the zone 1 reach :

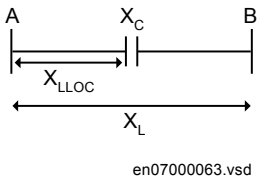

Figure 114: Simplified single line diagram of series capacitor located at X_{LLOC} ohm from A station

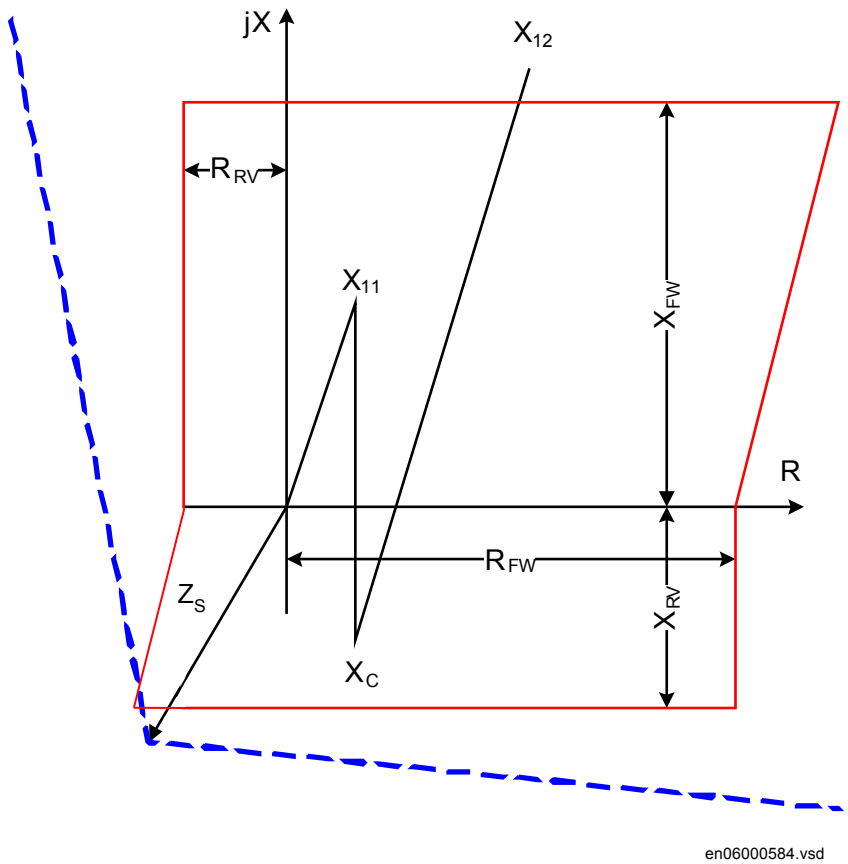

Figure 115: Measured impedance at voltage inversion

Forward direction:

Where

X_{LLoc}	equals line reactance up to the series capacitor(in the picture approximate 33% of XLine)
X1	is set to (XLindex-XC) · p/100.
p	is defined according to figure 113
1,2	is safety factor for fast operation of Zone 1

Compensated line with the series capacitor not into the reach of zone 1. The setting is thus:

X1	is set to (XLine-XC) · p/100.

When the calculation of XFw gives a negative value the zone 1 must be permanently blocked.

For protection on non compensated lines facing series capacitor on next line. The setting is thus:

- *X1* is set to (XLine-XC · K) · p/100.
- *K* equals side infeed factor at next busbar.

When the calculation of XFw gives a negative value the zone 1 must be permanently blocked.

Fault resistance

The resistive reach is, for all affected applications, restricted by the set reactive reach and the load impedance and same conditions apply as for a non-compensated network.

However, special notice has to be taken during settings calculations due to the ZnO because 50% of capacitor reactance appears in series with resistance, which corresponds to approximately 36% of capacitor reactance when the line current equals two times the protective current level. This information has high importance for setting of distance protection IED reach in resistive direction, for phase to ground- fault measurement as well as, for phase-to-phase measurement.

Overreaching zone 2

In series compensated network where independent tripping zones will have reduced reach due to the negative reactance in the capacitor and the sub-harmonic swinging the tripping will to a high degree be achieved by the communication scheme.

With the reduced reach of the under-reaching zones not providing effective protection for all faults along the length of the line, it becomes essential to provide over-reaching schemes like permissive overreach transfer trip (POTT) or blocking scheme can be used.

Thus it is of great importance that the zone 2 can detect faults on the whole line both with the series capacitor in operation and when the capacitor is bridged (short circuited). It is supposed also in this case that the reactive reach for phase-to-phase and for phase-to-ground faults is the same. The X1Fw, for all lines affected by the series capacito, are set to:

- *X1* >= 1,5 · XLine

The safety factor of 1.5 appears due to speed requirements and possible under reaching caused by the sub harmonic oscillations.

The increased reach related to the one used in non compensated system is recommended for all protections in the vicinity of series capacitors to compensate for delay in the operation caused by the sub harmonic swinging.

Settings of the resistive reaches are limited according to the minimum load impedance.

Reverse zone

The reverse zone that is normally used in the communication schemes for functions like fault current reversal logic, weak-in-feed logic or issuing carrier send in blocking scheme must detect all faults in the reverse direction which is detected in the opposite IED by the overreaching zone 2. The maximum reach for the protection in the opposite IED can be achieved with the series capacitor in operation.

The reactive reach can be set according to the following formula:
$X1=1.3 \cdot X1_{2Rem}-0.5(X1_L-X_C)$

Settings of the resistive reaches are according to the minimum load impedance:

Optional higher distance protection zones

When some additional distance protection zones (zone 4, for example) are used they must be set according to the influence of the series capacitor.

Setting of zones for parallel line application

Parallel line in service – Setting of zone1

With reference to section "Parallel line application with mutual coupling", the zone reach can be set to 85% of protected line.

Parallel line in service – setting of zone2

Overreaching zones (in general, zones 2 and 3) must overreach the protected circuit in all cases. The greatest reduction of a reach occurs in cases when both parallel circuits are in service with a single phase-to-ground fault located at the end of a protected line. The equivalent zero-sequence impedance circuit for this case is equal to the one in figure 72 in section "Parallel line in service".

The components of the zero-sequence impedance for the overreaching zones must be equal to at least:

$$R_{0E} = R_0 + R_{m0}$$

(Equation 148)

$$X_{0E} = X_0 + X_{m0}$$

(Equation 149)

Check the reduction of a reach for the overreaching zones due to the effect of the zero sequence mutual coupling. The reach is reduced for a factor:

$$K0 = 1 - \frac{Z0_m}{2 \cdot Z1 + Z0 + R_f}$$

(Equation 150)

If the denominator in equation 150 is called B and Z0m is simplified to X0m, then the real and imaginary part of the reach reduction factor for the overreaching zones can be written as:

$$\mathrm{Re}\left(\overline{K}0\right) = 1 - \frac{X0m \cdot \mathrm{Re}\left(B\right)}{\mathrm{Re}\left(B\right)^2 + \mathrm{Im}\left(B\right)^2}$$

(Equation 151)

$$\mathrm{Im}\left(\overline{K}0\right) = \frac{X0m \cdot \mathrm{Im}\left(B\right)}{\mathrm{Re}\left(B\right)^2 + \mathrm{Im}\left(B\right)^2}$$

(Equation 152)

Parallel line is out of service and grounded in both ends

Apply the same measures as in the case with a single set of setting parameters. This means that an underreaching zone must not overreach the end of a protected circuit for the single phase-to-ground-faults. Set the values of the corresponding zone (zero-sequence resistance and reactance) equal to:

$$R_{0E} = R_0 \cdot \left(1 + \frac{X_{m0}^{\ 2}}{R_0^{\ 2} + X_0^{\ 2}}\right)$$

(Equation 153)

$$X_{0E} = X_0 \cdot \left(1 - \frac{X_{m0}^{\ 2}}{R_0^{\ 2} + X_0^{\ 2}}\right)$$

(Equation 154)

Setting of reach in resistive direction

Set the resistive reach independently for each zone, and separately for phase-to-phase (*R1PP*), and phase-to-ground loop (*R1PG*) measurement.

Set separately the expected fault resistance for phase-to-phase faults (*R1PP*) and for the phase-to-ground faults (*RFPG*) for each zone. Set all remaining reach setting parameters independently of each other for each distance zone.

The final reach in resistive direction for phase-to-ground fault loop measurement automatically follows the values of the line-positive and zero-sequence resistance, and at the end of the protected zone is equal to equation 155.

$$R = \frac{1}{3}(2 \cdot R1PG + R0PG) + RFPG$$

(Equation 155)

$$\varphi_{loop} = \arctan\left[\frac{2 \cdot X1PE + X0}{2 \cdot R1PE + R0}\right]$$

(Equation 156)

Setting of the resistive reach for the underreaching zone1 must follow the following condition:

$$RFPG \leq 4.5 \cdot X1PG$$

(Equation 157)

The fault resistance for phase-to-phase faults is normally quite low, compared to the fault resistance for phase-to-ground faults. Limit the setting of the zone1 reach in resistive direction for phase-to-phase loop measurement to:

$$RFPP \leq 3 \cdot X1$$

(Equation 158)

Load impedance limitation, without load encroachment function

The following instructions is valid when the load encroachment function is not activated, which is done by setting the parameter *Rld* for the Phase Selector to its upper limit. If the load encroachment function is to be used for all or some of the measuring zones, the load limitation for those zones according to this chapter can be omitted. Check the maximum permissible resistive reach for any zone to ensure that there is a sufficient setting margin between the IED boundary and the minimum load impedance. The minimum load impedance (Ω/phase) is calculated as:

$$Z_{load\,min} = \frac{V^2}{S}$$

(Equation 159)

Where:

V is the minimum phase-to-phase voltage in kV

S is the maximum apparent power in MVA.

The load impedance [Ω/phase] is a function of the minimum operation voltage and the maximum load current:

$$Z_{load} = \frac{V_{min}}{\sqrt{3} \cdot I_{max}}$$

(Equation 160)

Minimum voltage Vmin and maximum current Imax are related to the same operating conditions. Minimum load impedance occurs normally under emergency conditions.

Because a safety margin is required to avoid load encroachment under three-phase conditions and to guarantee correct healthy phase IED operation under combined heavy three-phase load and ground faults, consider both: phase-to-phase and phase-to-ground fault operating characteristics.

To avoid load encroachment for the phase-to-ground measuring elements, the set resistive reach of any distance protection zone must be less than 80% of the minimum load impedance.

$$RFPG \leq 0.8 \cdot Z_{load}$$

(Equation 161)

This equation is applicable only when the loop characteristic angle for the single phase-to-ground faults is more than three times as large as the maximum expected load-impedance angle. More accurate calculations are necessary according to the equation below:

$$RFPG \leq 0.8 \cdot Z_{load\,\min} \cdot \left[\cos\partial - \frac{2 \cdot R1 + R0}{2 \cdot X1 + X0} \cdot \sin\partial \right]$$

(Equation 162)

Where:

ϑ is a maximum load-impedance angle, related to the minimum load impedance conditions.

To avoid load encroachment for the phase-to-phase measuring elements, the set resistive reach of any distance protection zone must be less than 160% of the minimum load impedance.

$$RFPP \le 1.6 \cdot Z_{load}$$

(Equation 163)

Equation 163 is applicable only when the loop characteristic angle for the phase-to-phase faults is more than three times as large as the maximum expected load-impedance angle. More accurate calculations are necessary according to equation 164.

$$RFPP \le 1.6 \cdot Z_{loadmin} \cdot \left[\cos\vartheta - \frac{R1PP}{X1PP} \cdot \sin\vartheta\right]$$

(Equation 164)

All this is applicable for all measuring zones when no power swing detection element is in the protection scheme. Use an additional safety margin of approximately 20% in cases when a power swing detection element is in the protection scheme, refer to the description of Power swing detection (ZMRPSB, 68) function.

Load impedance limitation, with load encroachment function activated

The parameters for load encroachment shaping of the characteristic are found in the description of the phase selection with load encroachment function, section "Setting guidelines". If the characteristic for the impedance measurement is shaped with the load encroachment algorithm, the parameter *RLdFw* and the corresponding load angle *ArgLd* must be set according to the minimum load impedance.

Setting of minimum operating currents

The operation of the distance function can be blocked if the magnitude of the currents is below the set value of the parameter *IMinPUPP* and *IMinPUPG*.

The default setting of *IMinPUPP* and *IMinPUPG* is 20% of *IBase* where *IBase* is the chosen base current for the analog input channels. The value has been proven in practice to be suitable in most of the applications. However, there might be applications where it is necessary to increase the sensitivity by reducing the minimum operating current down to 10% of IED base current. This happens especially in cases, when the IED serves as a remote back-up protection on series of very long transmission lines.

If the load current compensation is activated, there is an additional criteria *IMinOpIR* that will block the phase-ground loop if the 3I0<*IMinOpIR*. The default setting of *IMinOpIR* is 5% of the IED base current *IBase*.

The minimum operating fault current is automatically reduced to 75% of its set value, if the distance protection zone has been set for the operation in reverse direction.

Setting of timers for distance protection zones

The required time delays for different distance-protection zones are independent of each other. Distance protection zone1 can also have a time delay, if so required for selectivity reasons. One can set the time delays for all zones (basic and optional) in a range of 0 to 60 seconds. The tripping function of each particular zone can be inhibited by setting the corresponding *Operation* parameter to *Disabled*. Different time delays are possible for the ph-E (*tPG*) and for the ph-ph (*tPP*) measuring loops in each distance protection zone separately, to further increase the total flexibility of a distance protection.

3.6.2.3 Setting parameters

Settings for ZMCPDIS (21) are valid for zone 1, while settings for ZMCAPDIS (21) are valid for zone 2 - 5

Table 54: ZMCPDIS (21) Group settings (basic)

Name	Values (Range)	Unit	Step	Default	Description
Operation	Disabled Enabled	-	-	Enabled	Disable/Enable Operation
IBase	1 - 99999	A	1	3000	Base current, i.e. rated current
VBase	0.05 - 2000.00	kV	0.05	400.00	Base voltage, i.e. rated voltage
OperationDir	Disabled Non-directional Forward Reverse	-	-	Forward	Operation mode of directionality NonDir / Forw / Rev
OperationPP	Disabled Enabled	-	-	Enabled	Operation mode Disable/Enable of Phase-Phase loops
X1FwPP	0.10 - 3000.00	ohm/p	0.01	30.00	Positive sequence reactance reach, Ph-Ph, forward
R1PP	0.01 - 1000.00	ohm/p	0.01	5.00	Positive seq. resistance for characteristic angle, Ph-Ph
RFltFwdPP	0.10 - 3000.00	ohm/l	0.01	30.00	Fault resistance reach, Ph-Ph, forward
X1RvPP	0.10 - 3000.00	ohm/p	0.01	30.00	Positive sequence reactance reach, Ph-Ph, reverse
RFltRevPP	0.10 - 3000.00	ohm/l	0.01	30.00	Fault resistance reach, Ph-Ph, reverse
Timer tPP	Disabled Enabled	-	-	Enabled	Operation mode Disable/Enable of Zone timer, Ph-Ph
tPP	0.000 - 60.000	s	0.001	0.000	Time delay of trip, Ph-Ph
OperationPG	Disabled Enabled	-	-	Enabled	Operation mode Disable/Enable of Phase-Ground loops
X1FwPG	0.10 - 3000.00	ohm/p	0.01	30.00	Positive sequence reactance reach, Ph-G, forward

Table continues on next page

Name	Values (Range)	Unit	Step	Default	Description
R1PG	0.01 - 1000.00	ohm/p	0.01	5.00	Positive seq. resistance for characteristic angle, Ph-G
X0PG	0.10 - 9000.00	ohm/p	0.01	100.00	Zero sequence reactance reach, Ph-G
R0PG	0.01 - 3000.00	ohm/p	0.01	47.00	Zero seq. resistance for zone characteristic angle, Ph-G
RFltFwdPG	0.10 - 9000.00	ohm/l	0.01	100.00	Fault resistance reach, Ph-G, forward
X1RvPG	0.10 - 3000.00	ohm/p	0.01	30.00	Positive sequence reactance reach, Ph-G, reverse
RFltRevPG	0.10 - 9000.00	ohm/l	0.01	100.00	Fault resistance reach, Ph-G, reverse
Timer tPG	Disabled Enabled	-	-	Enabled	Operation mode Disable/ Enable of Zone timer, Ph-G
tPG	0.000 - 60.000	s	0.001	0.000	Time delay of trip, Ph-G
IMinPUPP	10 - 1000	%IB	1	20	Minimum pickup delta current (2 x current of lagging phase) for Phase-to-phase loops
IMinPUPG	10 - 1000	%IB	1	20	Minimum pickup phase current for Phase-to-ground loops
IMinOpIR	5 - 1000	%IB	1	5	Minimum operate residual current for Phase-Ground loops

Table 55: ZMCAPDIS (21) Group settings (basic)

Name	Values (Range)	Unit	Step	Default	Description
Operation	Disabled Enabled	-	-	Enabled	Disable/Enable Operation
IBase	1 - 99999	A	1	3000	Base current, i.e. rated current
VBase	0.05 - 2000.00	kV	0.05	400.00	Base voltage, i.e. rated voltage
OperationDir	Disabled Non-directional Forward Reverse	-	-	Forward	Operation mode of directionality NonDir / Forw / Rev
OperationPP	Disabled Enabled	-	-	Enabled	Operation mode Disable/Enable of Phase-Phase loops
X1FwPP	0.10 - 3000.00	ohm/p	0.01	30.00	Positive sequence reactance reach, Ph-Ph, forward
R1PP	0.01 - 1000.00	ohm/p	0.01	5.00	Positive seq. resistance for characteristic angle, Ph-Ph
RFltFwdPP	0.10 - 3000.00	ohm/l	0.01	30.00	Fault resistance reach, Ph-Ph, forward
X1RvPP	0.10 - 3000.00	ohm/p	0.01	30.00	Positive sequence reactance reach, Ph-Ph, reverse
RFltRevPP	0.10 - 3000.00	ohm/l	0.01	30.00	Fault resistance reach, Ph-Ph, reverse
Timer tPP	Disabled Enabled	-	-	Enabled	Operation mode Disable/Enable of Zone timer, Ph-Ph
tPP	0.000 - 60.000	s	0.001	0.000	Time delay of trip, Ph-Ph
Table continues on next page					

Name	Values (Range)	Unit	Step	Default	Description
OperationPG	Disabled Enabled	-	-	Enabled	Operation mode Disable/Enable of Phase-Ground loops
X1FwPG	0.10 - 3000.00	ohm/p	0.01	30.00	Positive sequence reactance reach, Ph-G, forward
R1PG	0.01 - 1000.00	ohm/p	0.01	5.00	Positive seq. resistance for characteristic angle, Ph-G
X0PG	0.10 - 9000.00	ohm/p	0.01	100.00	Zero sequence reactance reach, Ph-G
R0PG	0.01 - 3000.00	ohm/p	0.01	47.00	Zero seq. resistance for zone characteristic angle, Ph-G
RFltFwdPG	0.10 - 9000.00	ohm/l	0.01	100.00	Fault resistance reach, Ph-G, forward
X1RvPG	0.10 - 3000.00	ohm/p	0.01	30.00	Positive sequence reactance reach, Ph-G, reverse
RFltRevPG	0.10 - 9000.00	ohm/l	0.01	100.00	Fault resistance reach, Ph-G, reverse
Timer tPG	Disabled Enabled	-	-	Enabled	Operation mode Disable/ Enable of Zone timer, Ph-G
tPG	0.000 - 60.000	s	0.001	0.000	Time delay of trip, Ph-G
IMinPUPP	10 - 1000	%IB	1	20	Minimum pickup delta current (2 x current of lagging phase) for Phase-to-phase loops
IMinPUPG	10 - 1000	%IB	1	20	Minimum pickup phase current for Phase-to-ground loops

Table 56: ZDSRDIR (21D) Group settings (basic)

Name	Values (Range)	Unit	Step	Default	Description
OperationSC	NoSeriesComp SeriesComp	-	-	SeriesComp	Special directional criteria for voltage reversal
IBase	1 - 99999	A	1	3000	Base setting for current level
VBase	0.05 - 2000.00	kV	0.05	400.00	Base setting for voltage level
IMinPUPG	5 - 30	%IB	1	5	Minimum pickup phase current for Phase-to-ground loops
IMinPUPP	5 - 30	%IB	1	10	Minimum pickup delta current (2 x current of lagging phase) for Phase-to-phase loops
AngNegRes	90 - 175	Deg	1	130	Angle of blinder in second quadrant for forward direction
AngDir	5 - 45	Deg	1	15	Angle of blinder in fourth quadrant for forward direction
3I0Enable_PG	10 - 100	%IPh	1	20	3I0 pickup for releasing phase-to-ground measuring loops
3I0BLK_PP	10 - 100	%IPh	1	40	3I0 limit for disabling phase-to-phase measuring loops
OperationLdCh	Disabled Enabled	-	-	Enabled	Operation of load discrimination characteristic

Table continues on next page

Name	Values (Range)	Unit	Step	Default	Description
RLdFwd	1.00 - 3000.00	ohm/p	0.01	80.00	Forward resistive reach for the load impedance area
RldRev	1.00 - 3000.00	ohm/p	0.01	80.00	Reverse resistive reach for the load impedance area
LdAngle	5 - 70	Deg	1	30	Load angle determining the load impedance area
X1FwPP	0.50 - 3000.00	ohm/p	0.01	40.00	Positive sequence reactance reach, Ph-Ph, forward
R1PP	0.10 - 1000.00	ohm/p	0.01	7.00	Positive seq. resistance for characteristic angle, Ph-Ph
RFltFwdPP	0.50 - 3000.00	ohm/l	0.01	30.00	Fault resistance reach, Ph-Ph, forward
X1RvPP	0.50 - 3000.00	ohm/p	0.01	40.00	Positive sequence reactance reach, Ph-Ph, reverse
RFltRevPP	0.50 - 3000.00	ohm/l	0.01	30.00	Fault resistance reach, Ph-Ph, reverse
X1FwPG	0.50 - 3000.00	ohm/p	0.01	40.00	Positive sequence reactance reach, Ph-G, forward
R1PG	0.10 - 1000.00	ohm/p	0.01	7.00	Positive seq. resistance for characteristic angle, Ph-G
X0FwPG	0.50 - 9000.00	ohm/p	0.01	120.00	Zero sequence reactance reach, Ph-G, forward
R0PG	0.50 - 3000.00	ohm/p	0.01	20.00	Zero seq. resistance for zone characteristic angle, Ph-G
RFltFwdPG	1.00 - 9000.00	ohm/l	0.01	100.00	Fault resistance reach, Ph-G, forward
X1RvPG	0.50 - 3000.00	ohm/p	0.01	40.00	Positive sequence reactance reach, Ph-G, reverse
X0RvPG	0.50 - 9000.00	ohm/p	0.01	120.00	Zero sequence reactance reach, Ph-G, reverse
RFltRevPG	1.00 - 9000.00	ohm/l	0.01	100.00	Fault resistance reach, Ph-G, reverse

3.6.3 Phase selection, quadrilateral characteristic with fixed angle FDPSPDIS (21)

3.6.3.1 Identification

Function description	IEC 61850 identification	IEC 60617 identification	ANSI/IEEE C37.2 device number
Phase selection with load encroachment, quadrilateral characteristic	FDPSPDIS	*Z<phs*	21

3.6.3.2 Application

The operation of transmission networks today is in many cases close to the stability limit. The ability to accurately and reliably classify the different types of fault, so that single pole tripping and autoreclosing can be used plays an important role in this matter. Phase selection with load encroachment function FDPSPDIS (21) is designed to accurately select the proper fault loop in the distance measuring function depending on the fault type.

The heavy load transfer that is common in many transmission networks may in some cases be in opposite to the wanted fault resistance coverage. Therefore, the function has a built in algorithm for load encroachment, which gives the possibility to enlarge the resistive setting of both the Phase selection with load encroachment and the measuring zones without interfering with the load.

A current-based phase selection is also included. The measuring elements continuously measure three phase currents and the residual current and, compare them with the set values.

The extensive output signals from FDPSPDIS (21) give also important information about faulty phase(s), which can be used for fault analysis.

3.6.3.3 Setting guidelines

The following setting guideline consider normal overhead lines applications where φloop and φline is greater than 60°.

Load encroachment characteristics

The phase selector must at least cover the overreaching zone 2 in order to achieve correct phase selection for utilizing single-phase autoreclosing for faults on the entire line. It is not necessary to cover all distance protection zones. A safety margin of at least 10% is recommended. In order to get operation from distance zones , the phase selection outputs PHSELZ or DLECND must be connected to input PHSEL on ZMQPDIS (21), distance measuring block.

For normal overhead lines, the angle for the loop impedance φ for phase-to-ground fault is defined according to equation 165.

$$\arctan \varphi = \frac{X1_L + XN}{R1_L + RN}$$

(Equation 165)

In some applications, for instance cable lines, the angle of the loop might be less than 60°. In these applications, the settings of fault resistance coverage in forward and reverse direction, *RFltFwdPG* and *RFltRevPG* for phase-to-ground faults and

RFltRevPP and *RFltRevPP* for phase-to-phase faults have to be increased to avoid that FDPSPDIS (21) characteristic shall cut off some part of the zone characteristic. The necessary increased setting of the fault resistance coverage can be derived from trigonometric evaluation of the basic characteristic for respectively fault type.

Phase-to-ground fault in forward direction

With reference to figure 116, the following equations for the setting calculations can be obtained.

Index PHS in images and equations reference settings for Phase selection with load encroachment function FDPSPDIS (21) and index Zm reference settings for Distance protection function (ZMQPDIS, 21).

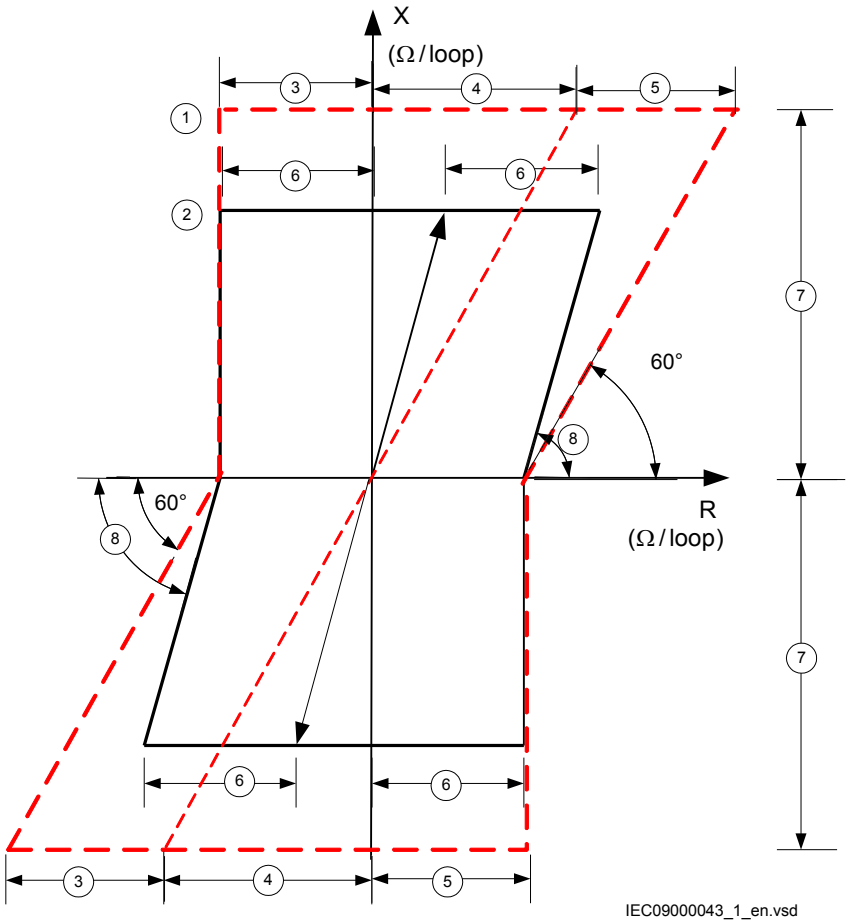

Figure 116: Relation between distance protection ZMQPDIS (21) and FDPSPDIS (21) for phase-to-ground fault φloop>60° (setting parameters in italic)

1 FDPSPDIS (21) (red line)

2 ZMQPDIS(21)

3 $RFltRevPG_{PHS}$

4 ($X1_{PHS}$+XN)/tan(60°)

5 $RFltFwdPG_{PHS}$

6 $RFPG_{ZM}$

7 $X1_{PHS}$+XN

8 φloop

9 $X1_{ZM}$+XN

Reactive reach

The reactive reach in forward direction must as minimum be set to cover the measuring zone used in the Teleprotection schemes, mostly zone 2. Equation 166 and equation 167 gives the minimum recommended reactive reach.

$$X1_{PHS} \geq 1.44 \cdot X1_{Zm}$$

(Equation 166)

$$X0_{PHS} \geq 1.44 \cdot X0_{Zm}$$

(Equation 167)

where:

$X1_{Zm}$ is the reactive reach for the zone to be covered by FDPSPDIS (21), and the constant

1.44 is a safety margin

$X0_{Zm}$ is the zero-sequence reactive reach for the zone to be covered by FDPSPDIS (21)

The reactive reach in reverse direction is automatically set to the same reach as for forward direction. No additional setting is required.

Fault resistance reach

The resistive reach must cover *RFPG* for the overreaching zone to be covered, mostly zone 2. Consider the longest overreaching zone if correct fault selection is important in the application. Equation 168 gives the minimum recommended resistive reach.

$$RFltFwdPG_{\min} \geq 1.1 \cdot RFPG_{zm}$$

(Equation 168)

where:

$RFPG_{Zm}$ is the setting *RFPG* for the longest overreaching zone to be covered by FDPSPDIS (21).

The security margin has to be increased to at least 1.2° in the case where φloop<60° to avoid that FDPSPDIS (21) characteristic shall cut off some part of the zone measurement characteristic.

Phase-to-ground fault in reverse direction

Reactive reach

The reactive reach in reverse direction is the same as for forward so no additional setting is required.

Resistive reach

The resistive reach in reverse direction must be set longer than the longest reverse zones. In blocking schemes it must be set longer than the overreaching zone at remote end that is used in the communication scheme. In equation 169 the index ZmRv references the specific zone to be coordinated to.

$$\mathrm{RFltREvPG} \geq 1.2 \cdot \mathrm{RFPG}_{\mathrm{ZmRv}}$$

(Equation 169)

Phase-to-phase fault in forward direction

Reactive reach

The reach in reactive direction is determined by phase-to-ground reach setting *X1*. No extra setting is required.

Resistive reach

In the same way as for phase-to-ground fault, the reach is automatically calculated based on setting *X1*. The reach will be X1/tan(60°) =X1/√(3).

Fault resistance reach

The fault resistance reaches in forward direction *RFItFwdPP*, must cover $RFPP_{Zm}$ with at least 25% margin. $RFPP_{Zm}$ is the setting of fault resistance for phase-to-phase fault for the longest overreaching zone to be covered by FDPSPDIS (21), see figure 117. The minimum recommended reach can be calculated according to equation 170.

$$RFltFwdPP \geq 1.25 \cdot RFPP_{zm}$$

(Equation 170)

where:

$RFPP_{Zm}$ is the setting of the longest reach of the overreaching zones that must be covered by FDPSPDIS (21).

Equation 170 modified is applicable also for the *RFltRevPP* as follows:

$$RFlt\,\mathrm{Re}\,vPP_{\min} \geq 1.25 \cdot RFPP_{zmRv}$$

Equation 170 is also valid for three-phase fault. The proposed margin of 25% will cater for the risk of cut off of the zone measuring characteristic that might occur at three-phase fault when FDPSPDIS (21) characteristic angle is changed from 60 degrees to 90 degrees (rotated 30° anti-clock wise).

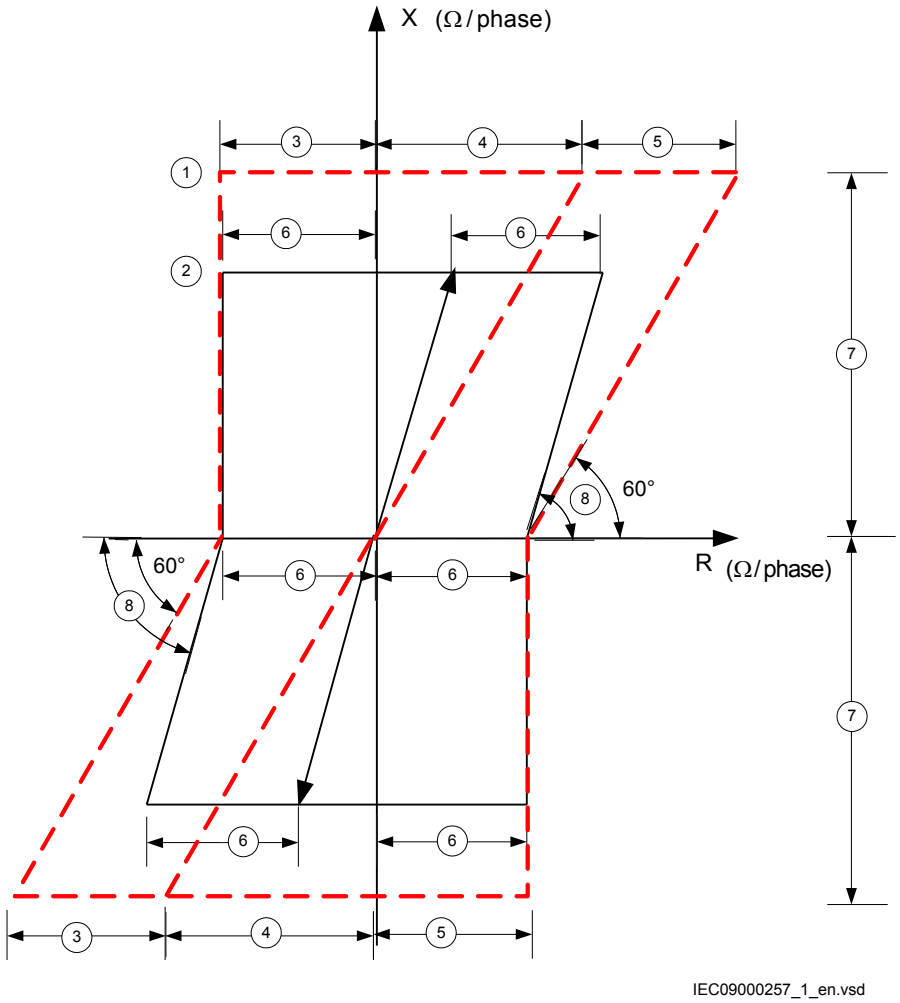

Figure 117: Relation between distance protection (ZMQPDIS) (21) and FDPSPDIS (21) characteristic for phase-to-phase fault for φline>60° (setting parameters in italic)

1 FDPSPDIS (21)(red line)

2 ZMQPDIS(21)

3 0.5 · $RFltRevPP_{PHS}$

4 $\frac{X1_{PHS}}{\tan(60°)}$

5 0.5 · $RFltFwdPP_{PHS}$

6 0.5 · $RFPP_{Zm}$

7 $X1_{PHS}$

8 $X1_{Zm}$

Resistive reach with load encroachment characteristic

The procedure for calculating the settings for the load encroachment consist basically to define the load angle *LdAngle*, the blinder *RLdFwd* in forward direction and blinder *RLdRev* in reverse direction, as shown in figure 118.

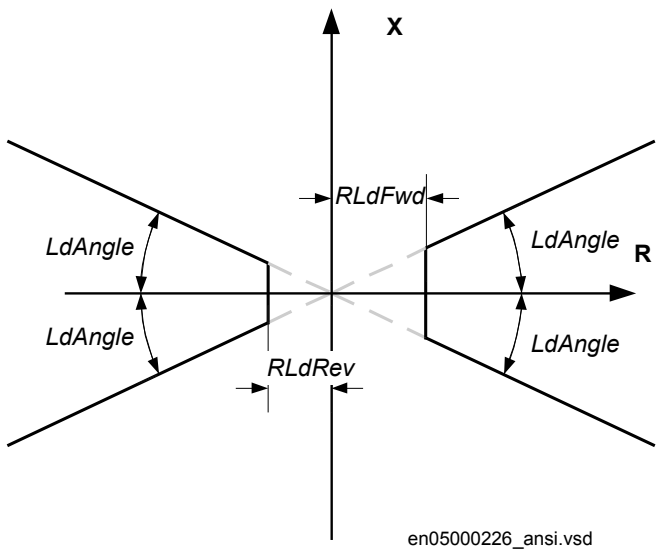

Figure 118: Load encroachment characteristic

The load angle *LdAngle* is the same in forward and reverse direction, so it could be suitable to begin to calculate the setting for that parameter. Set the parameter to the maximum possible load angle at maximum active load. A value bigger than 20° must be used.

The blinder in forward direction, *RLdFwd*, can be calculated according to equation 171.

$$RLdFwd = 0.8 \cdot \frac{V^2 \min}{P \exp \max}$$

where:

*P*exp max	is the maximum exporting active power
*V*min	is the minimum voltage for which the Pexp max occurs
0.8	is a security factor to ensure that the setting of *RLdFwd* can be lesser than the calculated minimal resistive load.

The resistive boundary *RLdRev* for load encroachment characteristic in reverse direction can be calculated in the same way as *RLdFwd*, but use maximum importing power that might occur instead of maximum exporting power and the relevant Vmin voltage for this condition.

Minimum operate currents

FDPSPDIS (21) has two current setting parameters which blocks the respective phase-to-ground loop and phase-to-phase loop if the RMS value of the phase current (ILn) and phase difference current (ILmILn) is below the settable threshold.

The threshold to activate the phase selector for phase-to-ground (*IMinPUPG*) is set to securely detect a single phase-to-ground fault at the furthest reach of the phase selection. It is recommended to set *IMinPUPP* to double value of *IMinPUPG*.

The threshold for opening the measuring loop for phase-to-ground fault (*3I0Enable_PG*) is set securely detect single line-to-ground fault at remote end on the protected line. It is recommended to set *3I0BLK_PP* to double value of *3I0Enable_PG*.

3.6.3.4 Setting parameters

Table 57: FDPSPDIS (21) Group settings (basic)

Name	Values (Range)	Unit	Step	Default	Description
IBase	1 - 99999	A	1	3000	Base current, i.e. rated current
VBase	0.05 - 2000.00	kV	0.01	400.00	Base voltage, i.e. rated voltage
3I0BLK_PP	10 - 100	%IPh	1	40	3I0 limit for disabling phase-to-phase measuring loops
3I0Enable_PG	10 - 100	%IPh	1	20	3I0 pickup for releasing phase-to-ground measuring loops
RLdFwd	1.00 - 3000.00	ohm/p	0.01	80.00	Forward resistive reach for the load impedance area
RldRev	1.00 - 3000.00	ohm/p	0.01	80.00	Reverse resistive reach for the load impedance area
LdAngle	5 - 70	Deg	1	30	Load angle determining the load impedance area
X1	0.50 - 3000.00	ohm/p	0.01	40.00	Positive sequence reactance reach
X0	0.50 - 9000.00	ohm/p	0.01	120.00	Zero sequence reactance reach
RFltFwdPP	0.50 - 3000.00	ohm/l	0.01	30.00	Fault resistance reach, Ph-Ph, forward
RFltRevPP	0.50 - 3000.00	ohm/l	0.01	30.00	Fault resistance reach, Ph-Ph, reverse
RFltFwdPG	1.00 - 9000.00	ohm/l	0.01	100.00	Fault resistance reach, Ph-G, forward
RFltRevPG	1.00 - 9000.00	ohm/l	0.01	100.00	Fault resistance reach, Ph-G, reverse
IMinPUPP	5 - 500	%IB	1	10	Minimum pickup delta current (2 x current of lagging phase) for Phase-to-phase loops
IMinPUPG	5 - 500	%IB	1	5	Minimum pickup phase current for Phase-to-ground loops

Table 58: FDPSPDIS (21) Group settings (advanced)

Name	Values (Range)	Unit	Step	Default	Description
OperationZ<	Disabled Enabled	-	-	Enabled	Operation of impedance based measurement
OperationI>	Disabled Enabled	-	-	Disabled	Operation of current based measurement
IPh>	10 - 2500	%IB	1	120	Start value for phase over-current element
Pickup_N	10 - 2500	%IB	1	20	Start value for trip from 3I0 over-current element
TimerPP	Disabled Enabled	-	-	Disabled	Operation mode Disable/Enable of Zone timer, Ph-Ph
tPP	0.000 - 60.000	s	0.001	3.000	Time delay to trip, Ph-Ph
TimerPE	Disabled Enabled	-	-	Disabled	Operation mode Disable/ Enable of Zone timer, Ph-G
tPG	0.000 - 60.000	s	0.001	3.000	Time delay to trip, Ph-E

3.6.4 Full-scheme distance measuring, Mho characteristic ZMHPDIS (21)

Function description	IEC 61850 identification	IEC 60617 identification	ANSI/IEEE C37.2 device number
Full-scheme distance protection, mho characteristic	ZMHPDIS	Z<	21

3.6.4.1 Application

Introduction

Transmission and sub-transmission networks are being extended and often become more and more complex, consisting of a high number of multi-circuit and/or multi terminal lines of very different lengths. These changes in the network will normally impose more stringent demands on the fault clearing equipment in order to maintain an unchanged or increased security level of the power system.

Full-scheme distance measuring, mho characteristic function (ZMHPDIS) in the IED is designed to meet basic requirements for application on transmission and sub-transmission lines (solid grounded systems) although it also can be used on distribution levels.

System grounding

The type of system grounding plays an important role when designing the protection system. In the following some hints with respect to distance protection are highlighted.

Solid grounded networks

In solid grounded systems the transformer neutrals are connected solidly to ground without any impedance between the transformer neutral and ground.

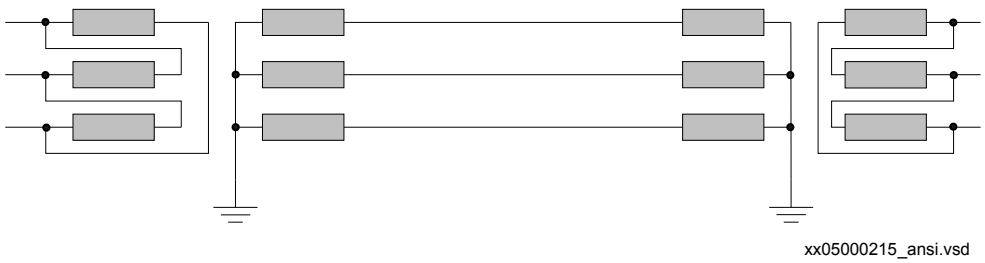

Figure 119: Solidly grounded network

The ground-fault current is as high as or even higher than the short-circuit current. The series impedances determine the magnitude of the ground-fault current. The shunt admittance has very limited influence on the ground-fault current. The shunt admittance may, however, have some marginal influence on the ground-fault current in networks with long transmission lines.

The ground-fault current at single phase-to-ground in phase A can be calculated as equation 172:

$$3I_0 = \frac{3 \cdot V_A}{Z_1 + Z_2 + Z_0 + 3Z_f} = \frac{V_A}{Z_1 + Z_N + Z_f}$$

(Equation 172)

Where:

V_A	is the phase to ground voltage (kV) in the faulty phase before fault
Z_1	is the positive sequence impedance (Ω/phase)
Z_2	is the negative sequence impedance (Ω/phase)
Z_0	is the zero sequence impedance (Ω/phase)
Z_f	is the fault impedance (Ω), often resistive
Z_N	is the ground return impedance defined as $(Z_0-Z_1)/3$

The voltage on the healthy phases is generally lower than 140% of the nominal phase-to-ground voltage. This corresponds to about 80% of the nominal phase-to-phase voltage.

The high zero-sequence current in solid grounded networks makes it possible to use impedance measuring technique to detect ground fault. However, distance protection has limited possibilities to detect high resistance faults and should therefore always be complemented with other protection function(s) that can carry out the fault clearance in those cases.

Effectively grounded networks

A network is defined as effectively grounded if the ground-fault factor f_e is less than 1.4. The ground-fault factor is defined according to equation 47.

$$f_e = \left| \frac{V_{max}}{V_{pn}} \right|$$

(Equation 173)

Where:

V_{max}	is the highest fundamental frequency voltage on one of the healthy phases at single phase-to-ground fault.
V_{pn}	is the phase-to-ground fundamental frequency voltage before fault.

Another definition for effectively grounded network is when the following relationships between the symmetrical components of the network impedances are valid, see equation 174 and equation 175.

$$X_0 = 3 \cdot X_1$$

(Equation 174)

$$R_0 \leq R_1$$

(Equation 175)

The magnitude of the ground-fault current in effectively grounded networks is high enough for impedance measuring element to detect ground fault. However, in the same way as for solid grounded networks, distance protection has limited possibilities to detect high resistance faults and should therefore always be complemented with other protection function(s) that can carry out the fault clearance in this case.

High impedance grounded networks

In high impedance networks the neutral of the system transformers are connected to the ground through high impedance, mostly a reactance in parallel with a high resistor.

This type of network is many times operated in radial, but can also be found operating meshed networks.

What is typical for this type of network is that the magnitude of the ground-fault current is very low compared to the short-circuit current. The voltage on the healthy phases will get a magnitude of √3 times the phase voltage during the fault. The zero-sequence voltage (3V0) will have the same magnitude in different places in the network due to low voltage drop distribution.

The magnitude of the total fault current can be calculated according to equation 176.

$$3I_0 = \sqrt{I_R^2 + \left(I_L - I_C\right)^2}$$

(Equation 176)

where

$3I_0$	is the ground-fault current (A)
I_R	is the current through the neutral point resistor (A)
I_L	is the current through the neutral point reactor (A)
I_C	is the total capacitive ground-fault current (A)

The neutral point reactor is normally designed so that it can be tuned to a position where the inductive current balances the capacitive current from the network that is:

$$\omega L = \frac{1}{3 \cdot \omega \cdot C}$$

(Equation 177)

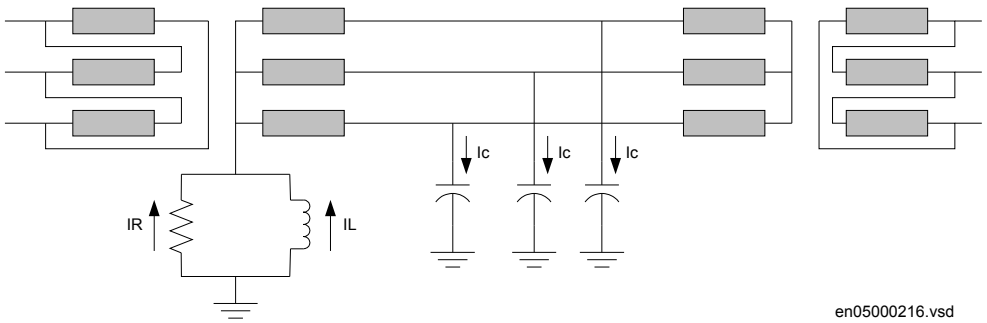

Figure 120: High impedance grounding network

The operation of high impedance grounded networks is different compared to solid grounded networks where all major faults have to be cleared very fast. In high impedance grounded networks, some system operators do not clear single phase-to-ground faults immediately; they clear the line later when it is more convenient. In case

of cross-country faults, many network operators want to selectively clear one of the two ground faults. To handle this type phenomena Phase preference logic function (PPLPHIZ) is needed, which is not common to be used in transmission applications.

In this type of network, it is mostly not possible to use distance protection for detection and clearance of ground faults. The low magnitude of the ground-fault current might not give pickup of the zero-sequence measurement element or the sensitivity will be too low for acceptance. For this reason a separate high sensitive ground-fault protection is necessary to carry out the fault clearance for single phase-to-ground fault.

Fault infeed from remote end

All transmission and most all sub-transmission networks are operated meshed. Typical for this type of network is that we will have fault infeed from remote end when fault occurs on the protected line. The fault infeed will enlarge the fault impedance seen by the distance protection. This effect is very important to keep in mind when both planning the protection system and making the settings.

With reference to figure 121, we can draw the equation for the bus voltage V_A at left side as:

If we divide V_A by IA we get Z present to the IED at A side

The infeed factor $(I_A+I_B)/I_A$ can be very high, 10-20 depending on the differences in source impedances at local and remote end.

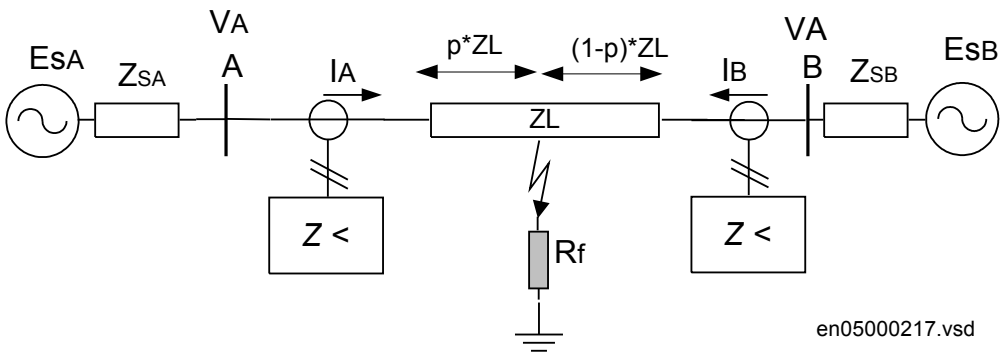

Figure 121: Influence of fault current infeed from remote end.

The effect of fault current infeed from remote end is one of the most driving factors for justify complementary protection to distance protection.

Load encroachment

In some cases the load impedance might enter the zone characteristic without any fault on the protected line. The phenomenon is called load encroachment and it might occur when an external fault is cleared and high emergency load is transferred on the protected line. The effect of load encroachment for the mho circle is illustrated to the left in figure 122. The entrance of the load impedance inside the characteristic is of course not allowed and the way to handle this with conventional distance protection is to consider this with the settings, that is, to have a security margin between the distance zone and the minimum load impedance. This has the drawback that it will reduce the sensitivity of the protection, that is, the ability to detect resistive faults.

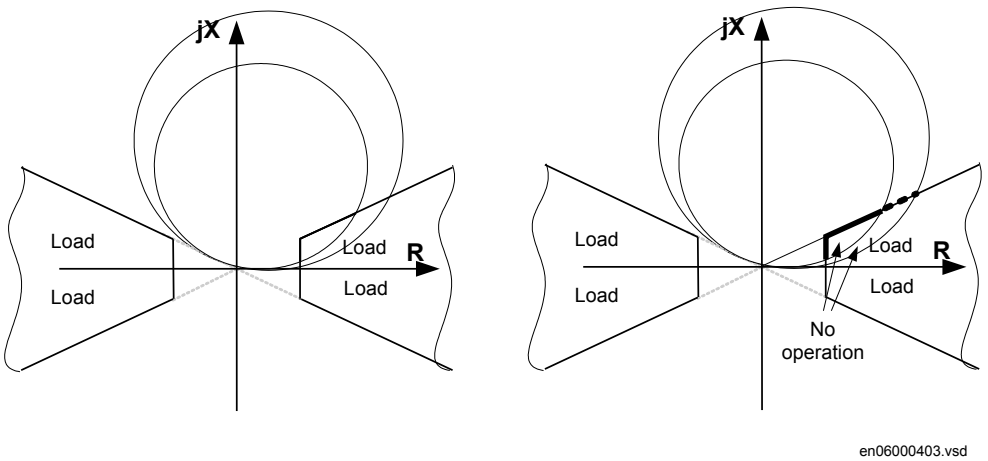

Figure 122: Load encroachment phenomena and shaped load encroachment characteristic

The Faulty phase identification with load encroachment for mho (FMPSPDIS, 21) function shapes the characteristic according to the diagram on the right in figure 122. The load encroachment algorithm will increase the possibility to detect high fault resistances, especially for phase-to-ground faults at remote line end. For example, for a given setting of the load angle *LdAngle* (see figure 123) for the Faulty phase identification with load encroachment for mho function (FMPSPDIS, 21), the zone reach can be expanded according to the diagram on the right in figure 122 given higher fault resistance coverage without risk for unwanted operation due to load encroachment. The part of the load encroachment sector that comes inside the mho circle will not cause a trip if FMPSPDIS (21) is activated for the zone measurement. This is valid in both directions.

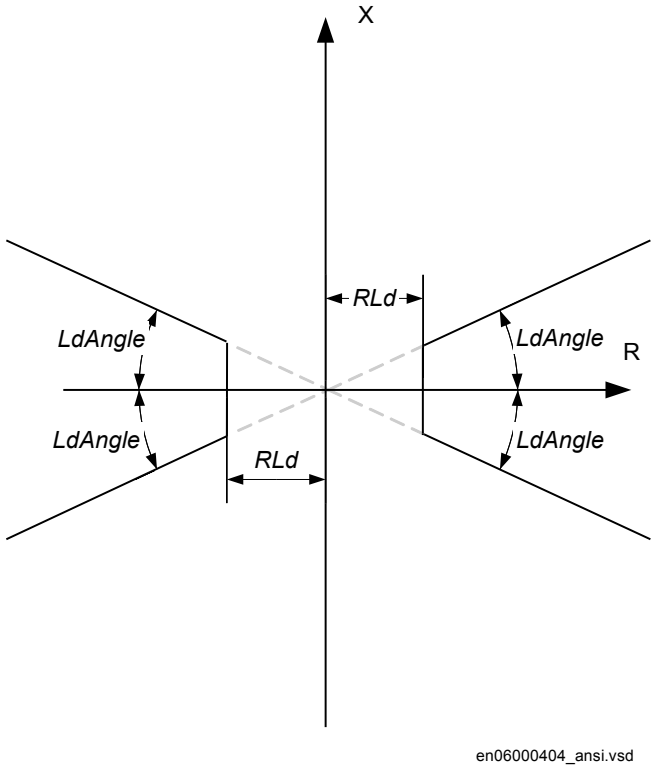

Figure 123: Load encroachment of Faulty phase identification with load encroachment for mho function FMPSPDIS (21) characteristic

The use of the load encroachment feature is essential for long heavy loaded lines, where there might be a conflict between the necessary emergency load transfer and necessary sensitivity of the distance protection. The function can also preferably be used on heavy loaded medium long lines. For short lines the major concern is to get sufficient fault resistance coverage and load encroachment is not a major problem. So, for short lines, the load encroachment function could preferably be switched off.

The main settings of the parameters for load encroachment are done in Faulty phase identification with load encroachment for mho function FMPSPDIS (21). The operation of load encroachment function is always activated. To deactivate the function, setting *LoadEnchMode* should be set off or the setting of *RLdFw* and *RLdRv* must be set to a value much higher than the maximal load impedance.

Short line application

The definition of short, medium and long lines is found in IEEE Std C37.113-1999. The length classification is defined by the ratio of the source impedance at the protected line's terminal to the protected line's impedance (SIR). SIR's of about 4 or greater generally define a short line. Medium lines are those with SIR's greater than 0.5 and less than 4.

In short line applications, the major concern is to get sufficient fault resistance coverage. Load encroachment is not so common. The line length that can be recognized as a short line is not a fixed length; it depends on system parameters such as voltage and source impedance, see table 48.

Table 59: Definition of short and very short line

Line category	Vn 110 kV	Vn 500 kV
Very short line	0.75–3.6 miles	3–15 miles
Short line	4–7 miles	15–30 miles

The use of load encroachment algorithm in Full-scheme distance protection, mho characteristic function (ZMHPDIS, 21) improves the possibility to detect high resistive faults without conflict with the load impedance (see to the right of figure 122).

For very short line applications the underreaching zone 1 can not be used due to that the voltage drop distribution through out the line will be too low causing risk for overreaching.

Load encroachment is normally no problems for short line applications so the load encroachment function could be switched off meaning *LoadEnchMode = Disabled*. This will increase the possibility to detect resistive close-in faults.

Long transmission line application

For long transmission lines the load encroachment will normally be a major concern. It is well known that it is difficult to achieve high sensitivity for phase-to-ground fault at remote end of a long line when the line is heavily loaded.

What can be recognized as long lines with respect to the performance of distance protection is noted in table 60.

Table 60: Definition of long lines

Line category	Vn 110 kV	Vn 500 kV
Long lines	77 km - 99 km	350 km - 450 km
Very long lines	> 99 km	> 450 km

The possibility to use the binary information from the load encroachment algorithm improves the possibility to detect high resistive faults at the same time as the security is improved (risk for unwanted trip due to load encroachment is eliminated). The possibility to also use the blinder together with the load encroachment algorithm will considerably increase the security but might also lower the dependability since the

blinder might cut off a larger part of the operating area of the circle (see to the right of figure 122).

It is recommended to use at least one of the load discrimination functions for long heavy loaded transmission lines.

Parallel line application with mutual coupling

General

Introduction of parallel lines in the network is increasing due to difficulties to get necessary area for new lines.

Parallel lines introduce an error in the measurement due to the mutual coupling between the lines. The lines need not to be of the same voltage in order to experience mutual coupling, and some coupling exists even for lines that are separated by 100 meters or more. The reason to the introduced error in measuring due to mutual coupling is the zero sequence voltage inversion that occurs.

It can be shown from analytical calculations of line impedances that the mutual impedances for positive and negative sequence are very small (< 1-2% of the self impedance) and it is a practice to neglect them.

From an application point of view there exists three types of network configurations (classes) that must be considered when making the settings for the protection function. Those are:

1. Parallel line with common positive and zero sequence network
2. Parallel circuits with common positive but isolated zero sequence network
3. Parallel circuits with positive and zero sequence sources isolated.

One example of class3 networks could be the mutual coupling between a 400 kV line and rail road overhead lines. This type of mutual coupling is not so common although it exists and is not treated any further in this manual.

For each type of network class we can have three different topologies; the parallel line can be in service, out of service, out of service and grounded in both ends.

The reach of the distance protection zone 1 will be different depending on the operation condition of the parallel line. It is therefore recommended to use the different setting groups to handle the cases when the parallel line is in operation and out of service and grounded at both ends.

Five zone distance protection, mho characteristic function (ZMHPDIS) can compensate for the influence of a zero sequence mutual coupling on the measurement at single phase-to-ground faults in the following ways, by using:

- The possibility of different setting values that influence the ground-return compensation for different distance zones within the same group of setting parameters.
- Different groups of setting parameters for different operating conditions of a protected multi circuit line.

Most multi circuit lines have two parallel operating circuits. The application guide mentioned below recommends in more detail the setting practice for this particular type of line. The basic principles also apply to other multi circuit lines.

Parallel line applications

In this type of networks, the parallel transmission lines terminate at common nodes at both ends. We consider the three most common operation modes:

1. parallel line in service.
2. parallel line out of service and grounded in both ends.
3. parallel line out of service and not grounded.

Parallel line in service

This type of application is very common and applies to all normal sub-transmission and transmission networks.

Let us analyze what happens when a fault occurs on the parallel line see figure 124.

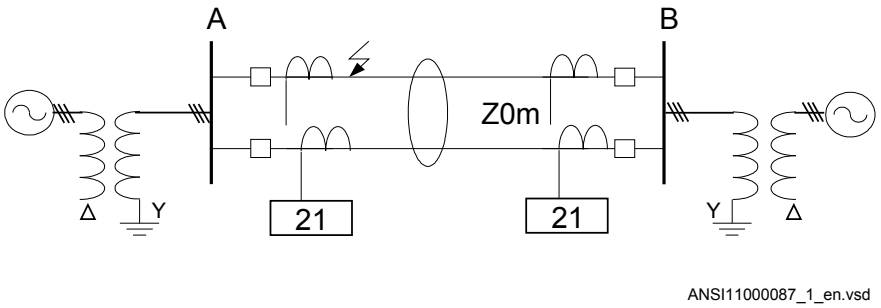

Figure 124: Class 1, parallel line in service.

The equivalent circuit of the lines can be simplified, see figure 125.

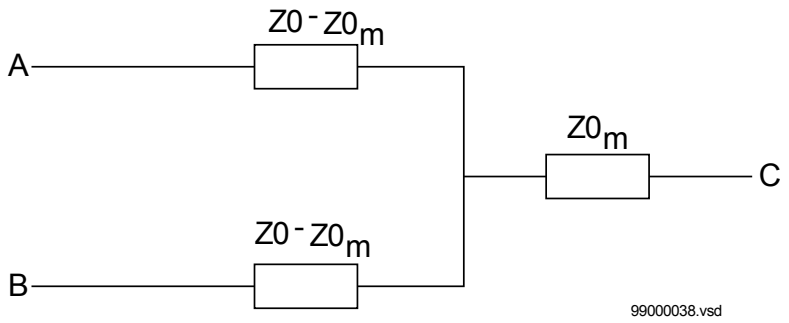

Figure 125: Equivalent zero sequence impedance circuit of the double-circuit, parallel, operating line with a single phase-to-ground fault at the remote busbar.

If the current on the parallel line have negative sign compared to the current on the protected line, that is, the current on the parallel line has an opposite direction compare to the current on the protected line, the distance function will overreach. If the currents have the same direction, the distance protection will underreach.

Calculation for a 400 kV line, where the resistance is excluded, gives with X1L=0.303 Ω/km, X0L=0.88 Ω/km, zone 1 reach is set to 90% of the line reactance p=71%, that is, the protection is underreaching with approximately 20%.

The zero sequence mutual coupling can reduce the reach of distance protection on the protected circuit when the parallel line is in normal operation. The reduction of the reach is most pronounced with no infeed in the line terminal closest to the fault. This reach reduction is normally less than 15%. But when the reach is reduced at one line end, it is proportionally increased at the opposite line end. So this 15% reach reduction does not significantly affect the operation of a permissive under-reach scheme.

Parallel line out of service and grounded

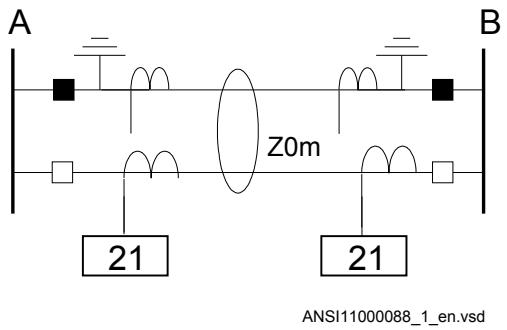

Figure 126: The parallel line is out of service and grounded

When the parallel line is out of service and grounded at both ends on the bus bar side of the line CT so that zero sequence current can flow on the parallel line, the equivalent zero sequence circuit of the parallel lines will be according to figure 126.

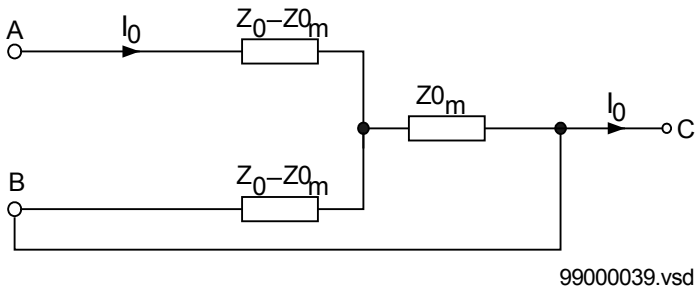

Figure 127: Equivalent zero-sequence impedance circuit for the double-circuit line that operates with one circuit disconnected and grounded at both ends

Here the equivalent zero-sequence impedance is equal to Z0-Z0m in parallel with (Z0-Z0m)/Z0-Z0m+Z0m, which is equal to equation 180.

$$\overline{Z}_E = \frac{\overline{Z}_0^2 - \overline{Z}_{om}^2}{\overline{Z}_0}$$

(Equation 180)

The influence on the distance measurement will be a considerable overreach, which must be considered when calculating the settings. It is a recommendation to use a separate setting group for this operation condition since it will reduce the reach considerable when the line is in operation.

Parallel line out of service and not grounded

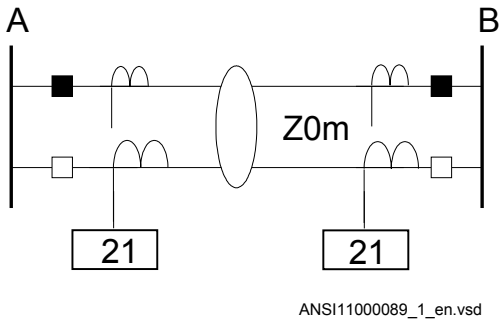

Figure 128: Parallel line is out of service and not grounded.

When the parallel line is out of service and not grounded, the zero sequence on that line can only flow through the line admittance to the ground. The line admittance is high which limits the zero sequence current on the parallel line to very low values.

In practice, the equivalent zero sequence impedance circuit for faults at the remote bus bar can be simplified to the circuit shown in figure 128

The line zero sequence mutual impedance does not influence the measurement of the distance protection in a faulty circuit.

This means that the reach of the underreaching distance protection zone is reduced if, due to operating conditions, the equivalent zero sequence impedance is set according to the conditions when the parallel system is out of operation and grounded at both ends.

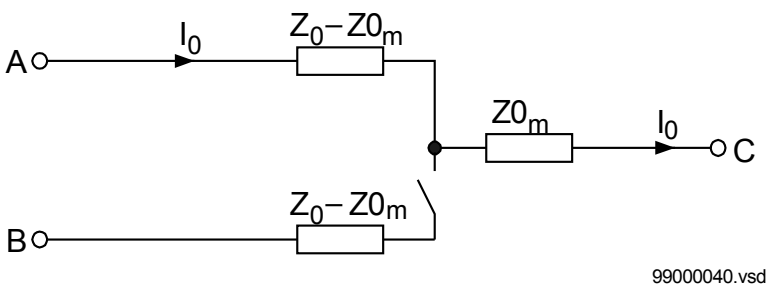

Figure 129: Equivalent zero sequence impedance circuit for a double-circuit line with one circuit disconnected and not grounded.

The reduction of the reach is equal to equation 181.

$$\overline{K}_U = \frac{\overline{\frac{1}{3}\cdot(2\cdot\overline{Z}_1 + \overline{Z}_{0E} + R_f}}{\frac{1}{3}\cdot(2\cdot\overline{Z}_1 + \overline{Z}_0) + R_f} = 1 - \frac{\overline{Z0_m^2}}{\overline{Z}_0\cdot(2\cdot\overline{Z}_1 + \overline{Z}_0 + 3R_f}$$

(Equation 181)

This means that the reach is reduced in reactive and resistive directions.

Ensure that the underreaching zones from both line ends will overlap a sufficient amount (at least 10%) in the middle of the protected circuit.

Tapped line application

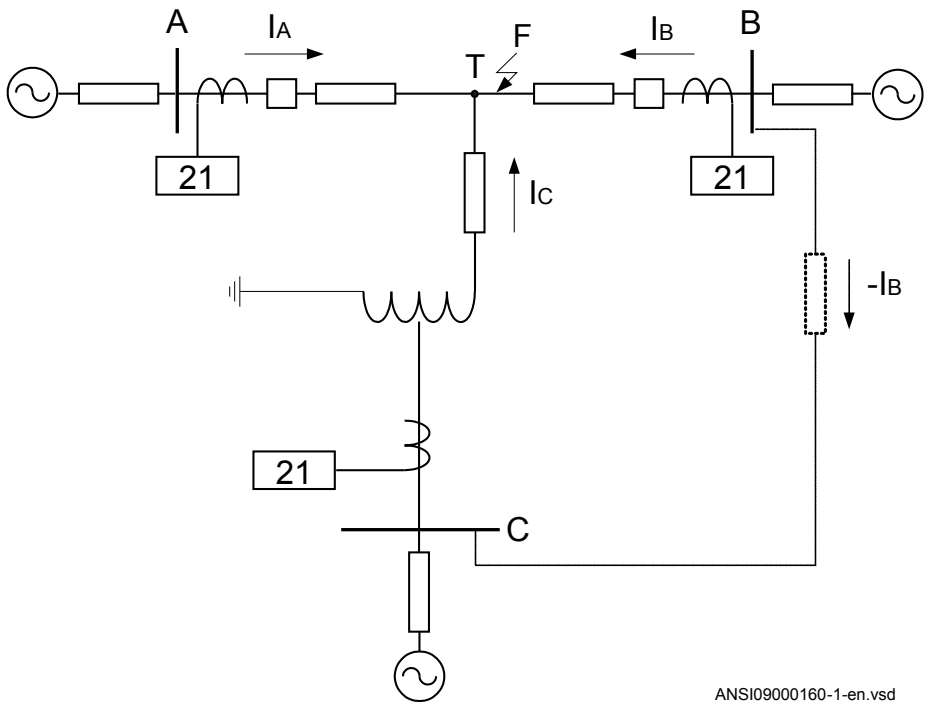

Figure 130: Example of tapped line with Auto transformer

This application gives rise to similar problem that was highlighted in section "Fault infeed from remote end", that is, increased measured impedance due to fault current infeed. For example, for faults between the T point and B station the measured impedance at A and C will be

$$\bar{Z}_A = \bar{Z}_{AT} + \frac{\bar{I}_A + \bar{I}_C}{\bar{I}_A} \cdot \bar{Z}_{TF}$$

(Equation 182)

$$\bar{Z}_C = \bar{Z}_{Trf} + \left(\bar{Z}_{CT} + \frac{I_A + I_C}{I_C} \cdot \bar{Z}_{TF} \right) \cdot \left(\frac{V2}{V1} \right)^2$$

(Equation 183)

where

Z_{AT} and Z_{CT}	is the line impedance from the A respective C station to the T point.
I_A and I_C	is fault current from A respective C station for fault between T and B.
V2/V1	Transformation ratio for transformation of impedance at U1 side of the transformer to the measuring side U2 (it is assumed that current and voltage distance function is taken from U2 side of the transformer).

For this example with a fault between T and B, the measured impedance from the T point to the fault will be increased by a factor defined as the sum of the currents from T point to the fault divided by the IED current. For the IED at C, the impedance on the high voltage side V1 has to be transferred to the measuring voltage level by the transformer ratio.

Another complication that might occur depending on the topology is that the current from one end can have a reverse direction for fault on the protected line. For example, for faults at T the current from B might go in reverse direction from B to C depending on the system parameters (see the dotted line in figure 130), given that the distance protection in B to T will measure wrong direction.

In three-end application, depending on the source impedance behind the IEDs, the impedances of the protected object and the fault location, it might be necessary to accept zone 2 trip in one end or sequential trip in one end.

Generally for this type of application it is difficult to select settings of zone 1 that both gives overlapping of the zones with enough sensitivity without interference with other zone 1 settings, that is, without selectivity conflicts. Careful fault calculations are necessary to determine suitable settings and selection of proper scheme communication.

3.6.4.2 Setting guidelines

General

The settings for Full-scheme distance protection, mho characteristic function (ZMHPDIS) are done in primary values. The instrument transformer ratio that has been set for the analog input card is used to automatically convert the measured secondary input signals to primary values used in ZMHPDIS.

The following basics should be considered, depending on application, when doing the setting calculations:

- Errors introduced by current and voltage instrument transformers, particularly under transient conditions.
- Inaccuracies in the line zero-sequence impedance data, and their effect on the calculated value of the ground-return compensation factor.
- The effect of infeed between the IED and the fault location, including the influence of different Z_0/Z_1 ratios of the various sources.
- The phase impedance of non transposed lines is not identical for all fault loops. The difference between the impedances for different phase-to-ground loops can be as large as 5-10% of the total line impedance.
- The effect of a load transfer between the terminals of the protected line, the fault resistance is considerable and the effect must be recognized.
- Zero-sequence mutual coupling from parallel lines.

The setting values of all parameters that belong to ZMHPDIS must correspond to the parameters of the protected line and be coordinated to the selectivity plan for the network.

Use different setting groups for the cases when the parallel line is in operation, out of service and not grounded and out of service and grounded in both ends. In this way it is possible to optimize the settings for each system condition.

When Directional impedance element for mho characteristic (ZDMRDIR, 21D) is used together with Fullscheme distance protection, mho characteristic (ZMHPDIS) the following settings for parameter *DirEvalType* in ZDMRDIR is vital:

- alternative *Comparator* is strongly recommended
- alternative *Imp/Comp* should generally not be used
- alternative Impedance should not be used. This alternative is intended for use together with Distance protection zone, quadrilateral characteristic (ZMQPDIS)

Setting of zone 1

The different errors mentioned earlier usually require a limitation of the underreaching zone (normally zone 1) to 75 - 90% of the protected line.

In case of parallel lines, consider the influence of the mutual coupling according to section "Parallel line application with mutual coupling" and select the case(s) that are valid in your application. We recommend to compensating the setting for the cases when the parallel line is in operation, out of service and not grounded and out of service and grounded in both ends. The setting of ground-fault reach should be selected to be <95% also when parallel line is out of service and grounded at both ends (worst case).

Setting of overreaching zone

The first overreaching zone (normally zone 2) must detect faults on the whole protected line. Considering the different errors that might influence the measurement in the same way as for zone 1, it is necessary to increase the reach of the overreaching zone to at least 120% of the protected line. The zone 2 reach can be even higher if the fault infeed from adjacent lines at remote end is considerable higher than the fault current at the IED location.

The setting shall generally not exceed 80% of the following impedances:

- The impedance corresponding to the protected line, plus the first zone reach of the shortest adjacent line.
- The impedance corresponding to the protected line, plus the impedance of the maximum number of transformers operating in parallel on the bus at the remote end of the protected line.

If the requirements in the bullet list above gives a zone 2 reach that gives non-selectivity between the overreaching zone and the shortest outgoing line at the remote end, the time delay of zone 2 must be increased by approximately 200ms to avoid unwanted operation in cases when the telecommunication for the short adjacent line at remote end is down during faults. The zone 2 must not be reduced below 120% of the protected line section. The whole line must be covered under all conditions.

The requirement that the zone 2 shall not reach more than 80% of the shortest adjacent line at remote end is highlighted in the example below.

If a fault occurs at point F (see figure 131, also for the explanation of all abbreviations used), the IED at point A senses the impedance:

$$\overline{Z}_{AF} = \overline{Z}_{AC} + \frac{\overline{I}_A + \overline{I}_B}{\overline{I}_A} \cdot \overline{Z}_{CF} = \overline{Z}_{AC} + \left(1 + \frac{\overline{I}_B}{\overline{I}_A}\right) \cdot \overline{Z}_{CF}$$

(Equation 184)

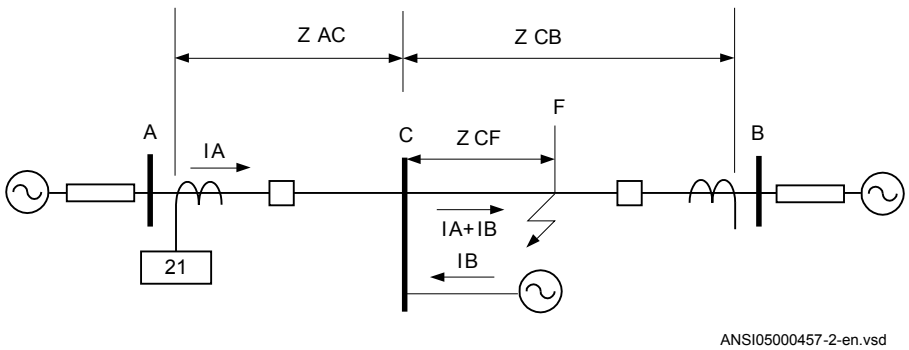

Figure 131: Setting of overreaching zone

Setting of reverse zone

The reverse zone is applicable for purposes of scheme communication logic, current reversal logic, weak-end infeed logic, and so on. The same applies to the back-up protection of the bus bar or power transformers. It is necessary to secure, that it always covers the overreaching zone, used at the remote line terminal for the telecommunication purposes.

Consider the possible enlarging factor that might exist due to fault infeed from adjacent lines. Equation 185 can be used to calculate the reach in reverse direction when the zone is used for blocking scheme, weak-end infeed, and so on.

$$Zrev \geq 1.2 \cdot \left| ZL\text{-}Z2rem \right|$$

(Equation 185)

Where:

ZL is the protected line impedance

Z2rem is zone 2 setting at remote end of protected line.

In some applications it might be necessary to consider the enlarging factor due to fault current infeed from adjacent lines in the reverse direction in order to obtain certain sensitivity.

Setting of zones for parallel line application

Parallel line in service – Setting of zone 1

With reference to section "Parallel line application with mutual coupling", the zone reach can be set to 85% of protected line.

Parallel line in service – Setting of zone 2

Overreaching zones (in general, zones 2 and 3) must overreach the protected circuit in all cases. The greatest reduction of a reach occurs in cases when both parallel circuits are in service with a single phase-to-ground fault located at the end of a protected line.

The equivalent zero-sequence impedance circuit for this case is equal to the one in figure 125 in section "Parallel line application with mutual coupling".

The components of the zero-sequence impedance for the overreaching zones must be equal to at least:

$$R_{0E} = R_0 + R0_m$$

(Equation 186)

$$X_{0E} = X_0 + X0_m$$

(Equation 187)

Check the reduction of a reach for the overreaching zones due to the effect of the zero-sequence mutual coupling. The reach is reduced for a factor:

$$K0 = 1 - \frac{Z0_m}{2 \cdot Z1 + Z0 + R_f}$$

(Equation 188)

If needed, enlarge the zone reach due to the reduction by mutual coupling. Consider also the influence on the zone reach due to fault current infeed from adjacent lines.

Parallel line is out of service and grounded in both ends

Apply the same measures as in the case with a single set of setting parameters. This means that an underreaching zone must not overreach the end of a protected circuit for the single phase-to-ground faults.

The equivalent impedance will be according to equation 180.

Load impedance limitation, without load encroachment function

The following instruction is valid when the load encroachment function or blinder function is not activated (*BlinderMode=Disabled*).The load encroachment function will not be activated if RLdFw and RLdRv is set to a value higher than expected minimal load impedance. If the load encroachment or blinder function is to be used for all or some of the measuring zones, the load limitation for those zones according to this chapter can be omitted. Check the maximum permissible resistive reach for any zone to ensure that there is a sufficient setting margin between the relay boundary and the minimum load impedance. The minimum load impedance (Ω/phase) is calculated as:

$$Zload\min = \frac{V^2}{S}$$

(Equation 189)

Where:

V is the minimum phase-to-phase voltage in kV

S is the maximum apparent power in MVA.

The load impedance [Ω/phase] is a function of the minimum operation voltage and the maximum load current:

$$Zload = \frac{V_{\min}}{\sqrt{3} \cdot I_{\max}}$$

(Equation 190)

Minimum voltage V_{min} and maximum current I_{max} are related to the same operating conditions. Minimum load impedance occurs normally under emergency conditions.

To avoid load encroachment for the phase-to-ground measuring elements, the set impedance reach of any distance protection zone must be less than 80% of the minimum load impedance.

For setting of the ground-fault loop, the following formula can be used:

$$ZPE \le 1.6 \cdot \frac{|Z_{Load}|}{\sqrt{2(1-\cos(\beta))}}$$

(Equation 191)

where:

Z_{load} = magnitude of minimum load impedance

φPE = $180° - 2 \cdot \gamma = 180° - 2(ArgPE - \Theta_{Load})$

The formula is derived by trigonometric analyze of the figure 132. The length of the vector from the origin O to the point F on the circle is defined by the law of cosine. The result gives the maximum diameter (RFPE) for which the load impedance touch the circle with the given load condition. Use an extra margin of 20% to give sufficient distance between the calculated minimum load impedance and relay boundary.

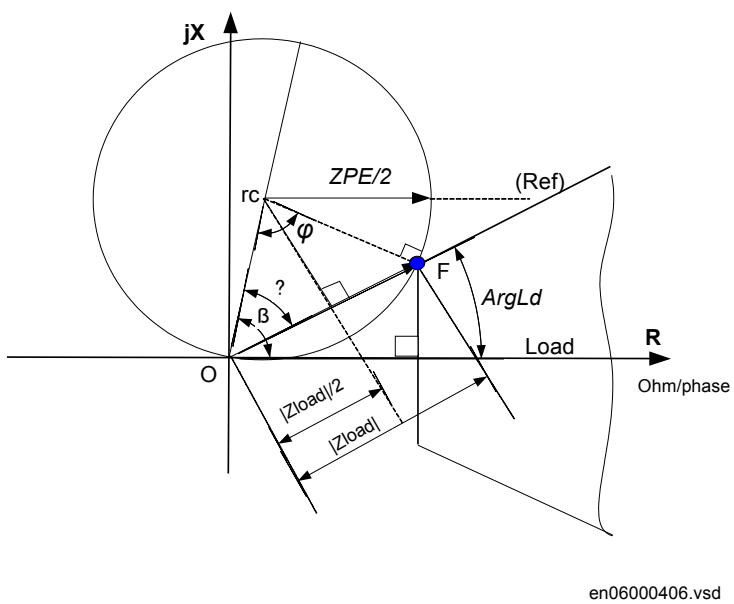

Figure 132: Definition of the setting condition to avoid load encroachment for ground-fault loop

The maximum setting for phase-to-phase fault can be defined by trigonometric analyze of the same figure 132. The formula to avoid load encroachment for the phase-to-phase measuring elements will thus be according to equation 192.

$$ZPP \le 1.6 \cdot \frac{\left|Z_{Load}\right|}{\sqrt{2 \cdot (1 - \cos(\varphi PP))}}$$

(Equation 192)

where:

$\varphi PP = 180° - 2 \cdot (ArgPP - \Theta_{Load})$

All this is applicable for all measuring zones when no power swing detection element or blinder is activated for the protection zones. Use an additional safety margin of approximately 20% in cases when a power swing detection element is in the protection scheme, refer to the description of the power swing detection function.

Load impedance limitation, with load encroachment function activated

The parameters for load encroachment shaping of the characteristic are found in the description of Faulty phase identification with load encroachment for mho (FMPSPDIS), refer to section "Load encroachment characteristics".

Setting of minimum operate currents

The operation of the distance function will be blocked if the magnitude of the currents is below the set value of the parameter *IMinPUPP* and *IMinPUPG*.

The default setting of *IMinOpPP* and *IMinPUPG* is 20% of *IBase* where *IBase* is the chosen base current for the analog input channels. The values have been proven in practice to be suitable in most of the applications. However, there might be applications where it is necessary to increase the sensitivity by reducing the minimum operate current down to 10% of *IBase*.

The minimum operate fault current is automatically reduced to 75% of its set value, if the distance protection zone has been set for the operation in reverse direction.

Setting of directional mode

Setting of the directional mode is by default set to forward by setting the parameter *DirModeSel* to *Forward*.

The selection of *Offset mho* can be used for sending block signal in blocking teleprotection scheme, switch onto fault application and so on.

The *Reverse* mode might be use in comparison schemes where it is necessary to absolute discriminate between forward and reverse fault.

Setting of direction for offset mho

If offset mho has been selected, one can select if the offset mho shall be *Non-Directional*, *Forward* or *Reverse* by setting the parameter *OfffsetMhoDir*.

When forward or reverse operation is selected, then the operation characteristic will be cut off by the directional lines used for the mho characteristic. The setting is by default set to *Non-Directional*.

Setting of timers for distance protection zones

The required time delays for different distance protection zones are independent of each other. Distance protection zone 1 can also have a time delay, if so required for selectivity reasons. One can set the time delays for all zones in a range of 0 to 60 seconds. The tripping function of each particular zone can be inhibited by setting the corresponding *Operation* parameter to *OffDisable-Zone*.

Different time delays are possible for the phase-to-ground*tLG* and for the phase-to-phase *tPP* measuring loops in each distance protection zone separately, to further increase the total flexibility of a distance protection.

In the case of evolving faults or momentary current transformer saturation conditions, the pick up of the zones may get delayed. Zone timer logic improves the operating time in such conditions. The zone timer logic can be set using the parameter *ZnTimerSel*. The triggering signal of phase-to-ground and phase-to-phase timers can be selected using *ZnTimerSel*.

3.6.4.3 Setting parameters

Table 61: ZMHPDIS (21) Group settings (basic)

Name	Values (Range)	Unit	Step	Default	Description
Operation	Disabled Enabled	-	-	Enabled	Operation Enable/Disable
IBase	1 - 99999	A	1	3000	Base current
VBase	0.05 - 2000.00	kV	0.05	400.00	Base voltage
DirMode	Disabled Offset Forward Reverse	-	-	Forward	Direction mode
LoadEncMode	Disabled Enabled	-	-	Disabled	Load encroachment mode Off/On
ReachMode	Overreach Underreach	-	-	Overreach	Reach mode Over/Underreach
OpModePG	Disabled Enabled	-	-	Enabled	Operation mode Disable/Enable of Phase-Ground loops
ZPG	0.005 - 3000.000	ohm/p	0.001	30.000	Positive sequence impedance setting for Phase-Ground loop

Table continues on next page

Name	Values (Range)	Unit	Step	Default	Description
ZAngPG	10 - 90	Deg	1	80	Angle for positive sequence line impedance for Phase-Ground loop
KN	0.00 - 3.00	-	0.01	0.80	Magnitud of ground return compensation factor KN
KNAng	-180 - 180	Deg	1	-15	Angle for ground return compensation factor KN
ZRevPG	0.005 - 3000.000	ohm/p	0.001	30.000	Reverse reach of the phase to ground loop(magnitude)
tPG	0.000 - 60.000	s	0.001	0.000	Delay time for operation of phase to ground elements
IMinPUPG	10 - 30	%IB	1	20	Minimum operation phase to ground current
OpModePP	Disabled Enabled	-	-	Enabled	Operation mode Disable/Enable of Phase-Phase loops
ZPP	0.005 - 3000.000	ohm/p	0.001	30.000	Impedance setting reach for phase to phase elements
ZAngPP	10 - 90	Deg	1	85	Angle for positive sequence line impedance for Phase-Phase elements
ZRevPP	0.005 - 3000.000	ohm/p	0.001	30.000	Reverse reach of the phase to phase loop(magnitude)
tPP	0.000 - 60.000	s	0.001	0.000	Delay time for operation of phase to phase
IMinPUPP	10 - 30	%IB	1	20	Minimum operation phase to phase current

Table 62: ZMHPDIS (21) Group settings (advanced)

Name	Values (Range)	Unit	Step	Default	Description
OffsetMhoDir	Non-directional Forward Reverse	-	-	Non-directional	Direction mode for offset mho
OpModetPG	Disabled Enabled	-	-	Enabled	Operation mode Disable/ Enable of Zone timer, Ph-G
OpModetPP	Disabled Enabled	-	-	Enabled	Operation mode Off / On of Zone timer, Ph-ph

3.6.5 Full-scheme distance protection, quadrilateral for earth faults ZMMPDIS (21), ZMMAPDIS (21)

Function description	IEC 61850 identification	IEC 60617 identification	ANSI/IEEE C37.2 device number
Fullscheme distance protection, quadrilateral for earth faults (zone 1)	ZMMPDIS	Z <	21
Fullscheme distance protection, quadrilateral for earth faults (zone 2-5)	ZMMAPDIS	Z <	21

3.6.5.1 Application

Introduction

Sub transmission networks are being extended and often become more and more complex, consisting of a high number of multi-circuit and/or multi terminal lines of very different lengths. These changes in the network will normally impose more stringent demands on the fault clearing equipment in order to maintain an unchanged or increased security level of the power system.

The distance protection function in IED is designed to meet basic requirements for application on transmission and sub transmission lines (solid grounded systems) although it also can be used on distribution levels.

System grounding

The type of system grounding plays an important roll when designing the protection system. In the following some hints with respect to distance protection are highlighted.

Solid grounded networks

In solid grounded systems the transformer neutrals are connected solidly to ground without any impedance between the transformer neutral and ground.

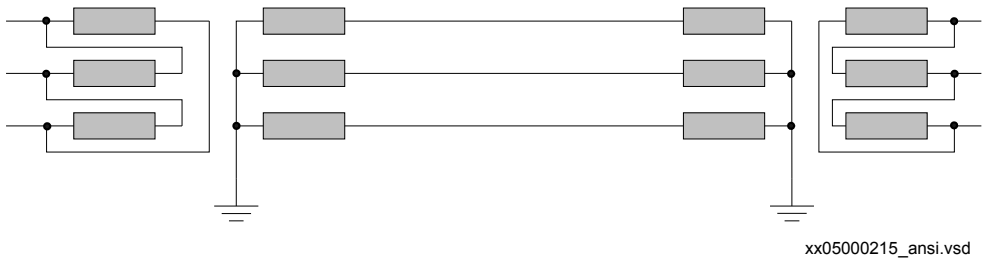

Figure 133: Solidly grounded network

The ground fault current is as high or even higher than the short-circuit current. The series impedances determine the magnitude of the ground fault current. The shunt admittance has very limited influence on the ground fault current. The shunt admittance may, however, have some marginal influence on the ground fault current in networks with long transmission lines.

The ground fault current at single phase-to-ground in phase L1 can be calculated as equation193:

$$3I_0 = \frac{3 \cdot V_A}{Z_1 + Z_2 + Z_0 + 3Z_f} = \frac{V_A}{Z_1 + Z_N + Z_f}$$

(Equation 193)

Where:

VA	is the phase-to-ground voltage (kV) in the faulty phase before fault
Z1	is the positive sequence impedance (Ω/phase)
Z2	is the negative sequence impedance (Ω/phase)
Z0	is the zero sequence impedance (Ω/phase)
Zf	is the fault impedance (Ω), often resistive
ZN	is the ground return impedance defined as (Z0-Z1)/3

The voltage on the healthy phases is generally lower than 140% of the nominal phase-to-ground voltage. This corresponds to about 80% of the nominal phase-to-phase voltage.

The high zero sequence current in solid grounded networks makes it possible to use impedance measuring technique to detect ground fault. However, distance protection has limited possibilities to detect high resistance faults and should therefore always be complemented with other protection function(s) that can carry out the fault clearance in those cases.

Effectively grounded networks

A network is defined as effectively grounded if the ground fault factor fe is less than 1.4. The ground fault factor is defined according to equation 47.

$$f_e = \left| \frac{V_{max}}{V_{pn}} \right|$$

(Equation 194)

Where:

V_{max} is the highest fundamental frequency voltage on one of the healthy phases at single phase-to-ground fault.

V_{pn} is the phase-to-ground fundamental frequency voltage before fault.

Another definition for effectively grounded network is when the following relationships between the symmetrical components of the network impedances are valid, see equation 195 and equation 196.

$$X_0 = 3 \cdot X_1$$

(Equation 195)

$$R_0 \leq R_1$$

(Equation 196)

The magnitude of the ground fault current in effectively grounded networks is high enough for impedance measuring element to detect fault. However, in the same way as for solid grounded networks, distance protection has limited possibilities to detect high resistance faults and should therefore always be complemented with other protection function(s) that can carry out the fault clearance in this case.

High impedance grounded networks

In high impedance networks the neutral of the system transformers are connected to the ground through high impedance, mostly a reactance in parallel with a high resistor.

This type of network is many times operated in radial, but can also be found operating meshed.

Typically, for this type of network is that the magnitude of the ground fault current is very low compared to the short circuit current. The voltage on the healthy phases will get a magnitude of √3 times the phase voltage during the fault. The zero sequence

voltage (3U0) will have the same magnitude in different places in the network due to low voltage drop distribution.

The magnitude of the total fault current can be calculated according to the formula below:

$$3I_0 = \sqrt{I_R{}^2 + \left(I_L - I_C\right)^2}$$

(Equation 197)

Where:

3I0	is the ground-fault current (A)
IR	is the current through the neutral point resistor (A)
IL	is the current through the neutral point reactor (A)
IC	is the total capacitive ground-fault current (A)

The neutral point reactor is normally designed so that it can be tuned to a position where the reactive current balances the capacitive current from the network that is:

$$\omega L = \frac{1}{3 \cdot \omega \cdot C}$$

(Equation 198)

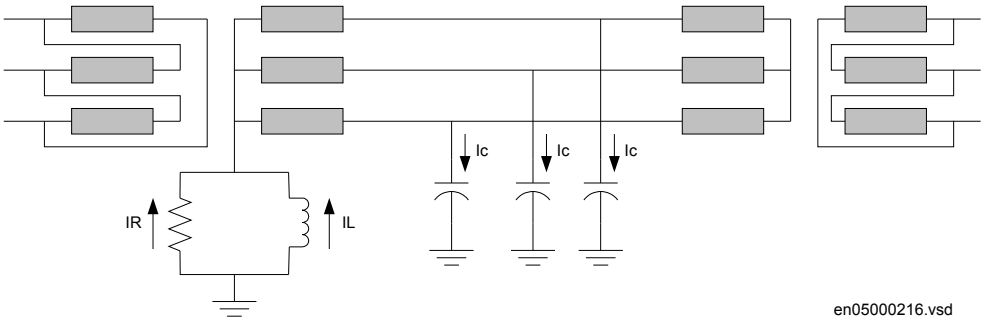

Figure 134: High impedance grounding network

The operation of high impedance grounded networks is different compare to solid grounded networks where all major faults have to be cleared very fast. In high impedance grounded networks, some system operators do not clear single phase-to-ground faults immediately; they clear the line later when it is more convenient. In case of cross country faults, many network operators want to selectively clear one of the two ground-faults. To handle this type phenomena a separate function called Phase

preference logic (PPLPHIZ) is needed, which is not common to be used in transmission applications.

In this type of network, it is mostly not possible to use distance protection for detection and clearance of ground-faults. The low magnitude of the ground-fault current might not give start of the zero sequence measurement element or the sensitivity will be too low for acceptance. For this reason a separate high sensitive ground-fault protection is necessary to carry out the fault clearance for single phase-to-ground fault.

Fault infeed from remote end

All transmission and most all sub transmission networks are operated meshed. Typical for this type of network is that we will have fault infeed from remote end when fault occurs on the protected line. The fault infeed will enlarge the fault impedance seen by the distance protection. This effect is very important to keep in mind when both planning the protection system and making the settings.

With reference to figure 135, we can draw the equation for the bus voltage Va at left side as:

$$\overline{V}_A = \overline{I}_A \cdot p \cdot Z_L + (\overline{I}_A + \overline{I}_B) \cdot R_f$$

(Equation 199)

If we divide Va by IA we get Z present to the IED at A side

$$\overline{Z}_A = \frac{\overline{V}_a}{\overline{I}_A} = p \cdot \overline{Z}_L + \frac{\overline{I}_A + \overline{I}_B}{\overline{I}_A} \cdot R_f$$

(Equation 200)

The infeed factor (IA+IB)/IA can be very high, 10-20 depending on the differences in source impedances at local and remote end.

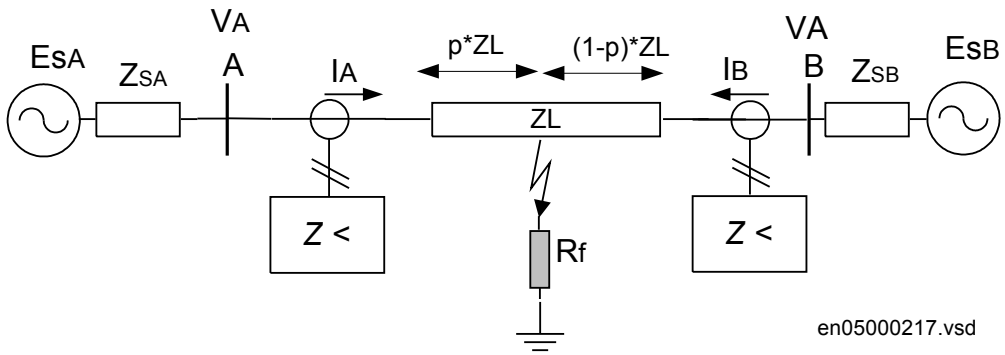

Figure 135: Influence of fault infeed from remote end.

The effect of fault current infeed from remote end is one of the most driving factors for justify complementary protection to distance protection.

Load encroachment

In some cases the load impedance might enter the zone characteristic without any fault on the protected line. The phenomenon is called load encroachment and it might occur when an external fault is cleared and high emergency load is transferred on the protected line. The effect of load encroachment is illustrated to the left in figure 136. The entrance of the load impedance inside the characteristic is of cause not allowed and the way to handle this with conventional distance protection is to consider this with the settings that is, to have a security margin between the distance zone and the minimum load impedance. This has the drawback that it will reduce the sensitivity of the protection that is, the ability to detect resistive faults.

The IED has a built in function which shapes the characteristic according to the right figure 4. The load encroachment algorithm will increase the possibility to detect high fault resistances, especially for line to ground faults at remote end. For example for a given setting of the load angle *LdAngle* for the load encroachment function, the resistive blinder for the zone measurement can be expanded according to the right in figure 136 given higher fault resistance coverage without risk for unwanted operation due to load encroachment. This is valid in both directions.

The use of the load encroachment feature is essential for long heavy loaded lines, where there might be a conflict between the necessary emergency load transfer and necessary sensitivity of the distance protection. ZMMPDIS (21) function can also preferably be used on heavy loaded medium long lines. For short lines the major concern is to get sufficient fault resistance coverage and load encroachment is not a major problem. So, for short lines, the load encroachment function could preferable be switched off.

The settings of the parameters for load encroachment are done in the Phase selection with load enchroachment, quadrilateral characteristic (FDPSPDIS,21).

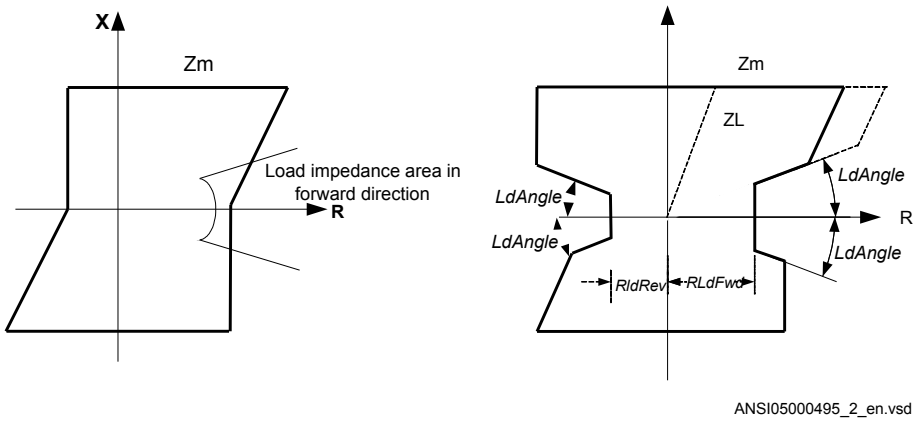

Figure 136: Load encroachment phenomena and shaped load encroachment characteristic

Short line application

In short line applications, the major concern is to get sufficient fault resistance coverage. Load encroachment is not so common. The line length that can be recognized as a short line is not a fixed length; it depends on system parameters such as voltage and source impedance, see table "Short line application".

Table 63: Definition of short and very short line

Line category	Vn	Vn
	110 kV	500 kV
Very short line Short line	0.75-3.5 miles	3-15 miles
	4-7 miles	15-30 miles

The possibility in IED to set resistive and reactive reach independent for positive and zero sequence fault loops and individual fault resistance settings for phase-to-phase and phase-to-ground fault together with load encroachment algorithm improves the possibility to detect high resistive faults without conflict with the load impedance, see figure 136.

For very short line applications the underreaching zone 1 can not be used due to that the voltage drop distribution through out the line will be too low causing risk for overreaching.

Load encroachment is normally no problems for short line applications so the load encroachment function could be switched off (*OperationLdCmp* = *Off*). This will increase the possibility to detect resistive close-in faults.

Long transmission line application

For long transmission lines the margin to the load impedance that is, to avoid load encroachment, will normally be a major concern. It is difficult to achieve high sensitivity for phase-to-ground fault at remote end of a long lines when the line is heavy loaded.

The definition of long lines with respect to the performance of distance protection is noted in table 64.

Table 64: Definition of long lines

Line category	Vn	Vn
	110 kV	500 kV
Long lines	45-60 miles	200–250 miles
Very long lines	>60 miles	>250 miles

As mentioned in the previous chapter, the possibility in IED to set resistive and reactive reach independent for positive and zero sequence fault loops and individual fault resistance settings for phase-to-phase and phase-to-ground fault together with load encroachment algorithm improves the possibility to detect high resistive faults at the same time as the security is improved (risk for unwanted trip due to load encroachment is eliminated).

Parallel line application with mutual coupling

General

Introduction of parallel lines in the network is increasing due to difficulties to get necessary area for new lines.

Parallel lines introduce an error in the measurement due to the mutual coupling between the parallel lines. The lines need not to be of the same voltage in order to experience mutual coupling, and some coupling exists even for lines that are separated by 100 meters or more. The reason to the introduced error in measuring due to mutual coupling is the zero sequence voltage inversion that occurs.

It can be shown from analytical calculations of line impedances that the mutual impedances for positive and negative sequence are very small (< 1-2%) of the self impedance and it is practice to neglect them.

From an application point of view there exists three types of network configurations (classes) that must be considered when making the settings for the protection function. Those are:

1. Parallel line with common positive and zero sequence network
2. Parallel circuits with common positive but isolated zero-sequence network
3. Parallel circuits with positive and zero sequence sources isolated.

One example of class3 networks could be the mutual coupling between a 400 kV line and rail road overhead lines. This type of mutual coupling is not so common although it exists and is not treated any further in this manual.

For each type of network class we can have three different topologies; the parallel line can be in service, out of service, out of service and grounded in both ends.

The reach of the distance protection zone1 will be different depending on the operation condition of the parallel line. It is therefore recommended to use the different setting groups to handle the cases when the parallel line is in operation and out of service and grounded at both ends.

The distance protection within the IED can compensate for the influence of a zero-sequence mutual coupling on the measurement at single phase-to-ground faults in the following ways, by using:

- The possibility of different setting values that influence the ground-return compensation for different distance zones within the same group of setting parameters.
- Different groups of setting parameters for different operating conditions of a protected multi circuit line.

Most multi circuit lines have two parallel operating circuits. The application guide mentioned below recommends in more detail the setting practice for this particular type of line. The basic principles also apply to other multi circuit lines.

Parallel line applications

This type of networks are defined as those networks where the parallel transmission lines terminate at common nodes at both ends. We consider the three most common operation modes:

1. parallel line in service.
2. parallel line out of service and grounded.
3. parallel line out of service and not grounded.

Parallel line in service

This type of application is very common and applies to all normal sub-transmission and transmission networks.

A simplified single line diagram is shown in figure 137.

$$\overline{Z} = \frac{\overline{V}_{ph}}{\overline{I}_{ph} + 3\overline{I}_0 \cdot \frac{\overline{Z}_0 - \overline{Z}_1}{3 \cdot \overline{Z}_1}} = \frac{\overline{V}_{ph}}{\overline{I}_{ph} + 3\overline{I}_0 \cdot \overline{K}_N}$$

(Equation 201)

Where:

Vph	is phase-to-ground voltage at the IED point
Iph	is phase current in the faulty phase
3I0	is ground to fault current
Z1	is positive sequence impedance
Z0	is zero sequence impedance

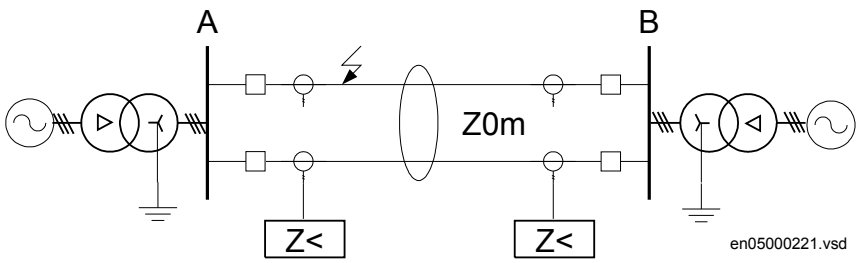

Figure 137: Class 1, parallel line in service.

The equivalent circuit of the lines can be simplified, see figure 138.

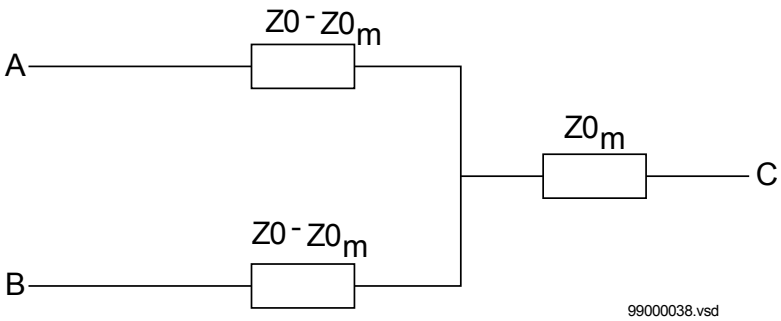

Figure 138: Equivalent zero sequence impedance circuit of the double-circuit, parallel, operating line with a single phase-to-ground fault at the remote busbar

When mutual coupling is introduced, the voltage at the IED point A will be changed.

If the current on the parallel line have negative sign compare to the current on the protected line that is, the current on the parallel line has an opposite direction compare to the current on the protected line, the distance function will overreach. If the currents have the same direction, the distance protection will underreach.

Calculation for a 400 kV line, where we for simplicity have excluded the resistance, gives with X1L=0.303 Ω/km, X0L=0.88 Ω/km, zone 1 reach is set to 90% of the line reactance p=71% that is, the protection is underreaching with approximately 20%.

The zero-sequence mutual coupling can reduce the reach of distance protection on the protected circuit when the parallel line is in normal operation. The reduction of the reach is most pronounced with no infeed in the line IED closest to the fault. This reach reduction is normally less than 15%. But when the reach is reduced at one line end, it is proportionally increased at the opposite line end. So this 15% reach reduction does not significantly affect the operation of a permissive under-reach scheme.

Parallel line out of service and grounded

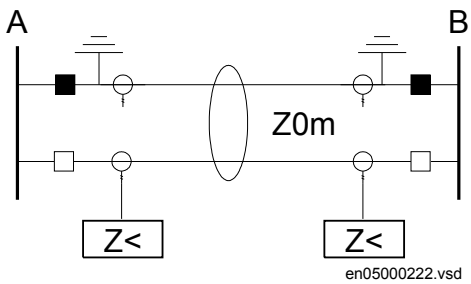

Figure 139: The parallel line is out of service and grounded.

When the parallel line is out of service and grounded at both ends on the bus bar side of the line CT so that zero sequence current can flow on the parallel line, the equivalent zero sequence circuit of the parallel lines will be according to figure 139.

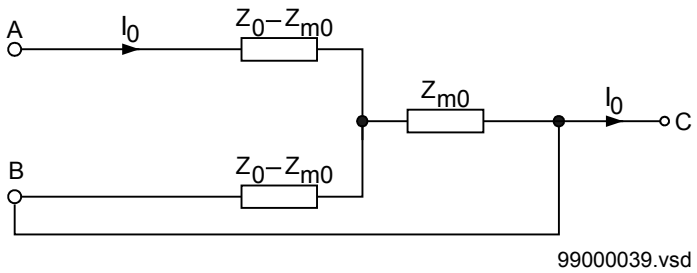

Figure 140: Equivalent zero-sequence impedance circuit for the double-circuit line that operates with one circuit disconnected and grounded at both ends.

Here the equivalent zero sequence impedance is equal to Z0-Z0m in parallel with (Z0-Z0m)/Z0-Z0m+Z0m which is equal to equation 202.

$$\overline{Z}_E = \frac{\overline{Z}_0^2 - \overline{Z}_{om}^2}{\overline{Z}_0}$$

(Equation 202)

The influence on the distance measurement will be a considerable overreach, which must be considered when calculating the settings. It is a recommendation to use a separate setting group for this operation condition since it will reduce the reach considerable when the line is in operation. All expressions below are proposed for practical use. They assume the value of zero sequence, mutual resistance R0m equals to zero. They consider only the zero-sequence, mutual reactance X0m. Calculate the equivalent X0E and R0E zero-sequence parameters according to equation 203 and equation 204 for each particular line section and use them for calculating the reach for the underreaching zone.

$$R_{0E} = R_0 \bullet \left(1 + \frac{X_{0m}^{\ 2}}{R_0^2 + X_0^2}\right)$$

(Equation 203)

$$X_{0E} = X_0 \bullet \left(1 - \frac{X_{0m}^{\ 2}}{R_0^2 + X_0^2}\right)$$

(Equation 204)

Parallel line out of service and not grounded

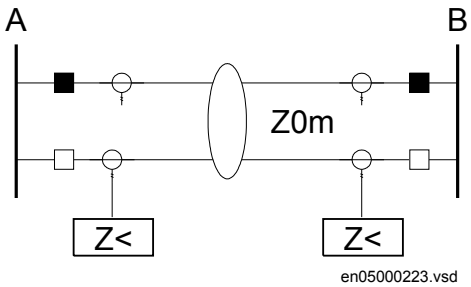

Figure 141: Parallel line is out of service and not grounded.

When the parallel line is out of service and not grounded, the zero sequence on that line can only flow through the line admittance to the ground. The line admittance is

high which limits the zero sequence current on the parallel line to very low values. In practice, the equivalent zero sequence impedance circuit for faults at the remote bus bar can be simplified to the circuit shown in figure 141

The line zero-sequence mutual impedance does not influence the measurement of the distance protection in a faulty circuit. This means that the reach of the underreaching distance protection zone is reduced if, due to operating conditions, the equivalent zero sequence impedance is set according to the conditions when the parallel system is out of operation and grounded at both ends.

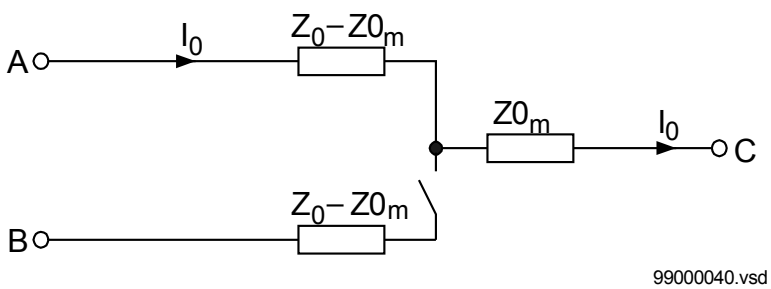

Figure 142: Equivalent zero-sequence impedance circuit for a double-circuit line with one circuit disconnected and not grounded.

The reduction of the reach is equal to equation 205.

$$\overline{K}_U = \frac{\frac{1}{3}\cdot\left(2\cdot\overline{Z_1}+\overline{Z_{0E}}\right)+R_f}{\frac{1}{3}\cdot\left(2\cdot\overline{Z_1}+\overline{Z_0}\right)+R_f} = 1-\frac{\overline{Z_{m0}}^2}{\overline{Z_0}\cdot\left(2\cdot\overline{Z}_1+\overline{Z}_0+3R_f\right)}$$

(Equation 205)

This means that the reach is reduced in reactive and resistive directions. If the real and imaginary components of the constant A are equal to equation 206 and equation 207.

$$\mathrm{Re}(\overline{A}) = R0\cdot(2\cdot R1+R0+3\cdot Rf)-X0\cdot(X0+2\cdot X1)$$

(Equation 206)

$$\mathrm{Im}(\overline{A}) = X_0\cdot(2\cdot R_1+R_0+3\cdot R_1)+R_0\cdot(2\cdot X_1+X_0)$$

(Equation 207)

The real component of the KU factor is equal to equation 208.

$$\mathrm{Re}\left(\overline{K}_U\right) = 1 + \frac{\mathrm{Re}\left(\overline{A}\right) \cdot X_{m0}^{\ 2}}{\left[\mathrm{Re}\left(\overline{A}\right)\right]^2 + \left[\mathrm{Im}\left(\overline{A}\right)\right]^2}$$

(Equation 208)

The imaginary component of the same factor is equal to equation 209.

$$\mathrm{Im}\left(\overline{K}_U\right) = \frac{\mathrm{Im}\left(\overline{A}\right) \cdot X_{m0}^{\ 2}}{\left[\mathrm{Re}\left(\overline{A}\right)\right]^2 + \left[\mathrm{Im}\left(\overline{A}\right)\right]^2}$$

(Equation 209)

Ensure that the underreaching zones from both line ends will overlap a sufficient amount (at least 10%) in the middle of the protected circuit.

Tapped line application

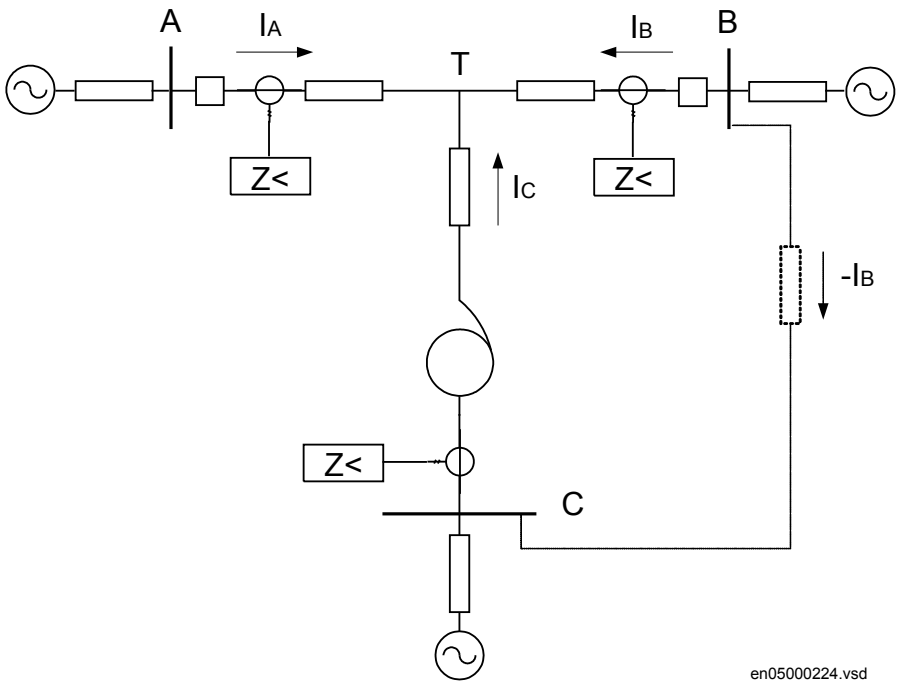

Figure 143: Example of tapped line with Auto transformer

This application gives rise to similar problem that was highlighted in section "Fault infeed from remote end" that is, increased measured impedance due to fault current

infeed. For example for faults between the T point and B station the measured impedance at A and C will be

$$\bar{Z}_A = \bar{Z}_{AT} + \frac{\bar{I}_A + \bar{I}_C}{\bar{I}_A} \cdot \bar{Z}_{TF}$$

(Equation 210)

$$\bar{Z}_C = \bar{Z}_{Trf} + \left(\bar{Z}_{CT} + \frac{\bar{I}_A + \bar{I}_C}{\bar{I}_C} \cdot \bar{Z}_{TB} \right) \cdot \left(\frac{V2}{V1} \right)^2$$

(Equation 211)

Where:

ZAT and ZCT	is the line impedance from the B respective C station to the T point.
IA and IC	is fault current from A respective C station for fault between T and B.
V2/V1	Transformation ratio for transformation of impedance at V1 side of the transformer to the measuring side V2 (it is assumed that current and voltage distance function is taken from V2 side of the transformer).

For this example with a fault between T and B, the measured impedance from the T point to the fault will be increased by a factor defined as the sum of the currents from T point to the fault divided by the IED current. For the IED at C, the impedance on the high voltage side U1 has to be transferred to the measuring voltage level by the transformer ratio.

Another complication that might occur depending on the topology is that the current from one end can have a reverse direction for fault on the protected line. For example for faults at T the current from B might go in reverse direction from B to C depending on the system parameters (see the dotted line in figure 143), given that the distance protection in B to T will measure wrong direction.

In three-end application, depending on the source impedance behind the IEDs, the impedances of the protected object and the fault location, it might be necessary to accept zone2 trip in one end or sequential trip in one end.

Generally for this type of application it is difficult to select settings of zone1 that both gives overlapping of the zones with enough sensitivity without interference with other zone1 settings that is, without selectivity conflicts. Careful fault calculations are necessary to determine suitable settings and selection of proper scheme communication.

Fault resistance

The performance of distance protection for single phase-to-ground faults is very important, because normally more than 70% of the faults on transmission lines are single phase-to-ground faults. At these faults, the fault resistance is composed of three parts: arc resistance, resistance of a tower construction, and tower-footing resistance. The arc resistance can be calculated according to Warrington's formula:

$$Rarc = \frac{28707 \cdot L}{I^{1.4}}$$

(Equation 212)

where:

L represents the length of the arc (in meters). This equation applies for the distance protection zone 1. Consider approximately three-times arc foot spacing for the zone 2 and wind speed of approximately 50 km/h

I is the actual fault current in A.

In practice, the setting of fault resistance for both phase-to-ground (*RFPE*) and phase-to-phase (*RFPP*) should be as high as possible without interfering with the load impedance in order to obtain reliable fault detection.

3.6.5.2 Setting guidelines

General

The settings for the Full-scheme distance protection, quadrilateral for earth faults (ZMMPDIS, 21) function are done in primary values. The instrument transformer ratio that has been set for the analogue input card is used to automatically convert the measured secondary input signals to primary values used in ZMMPDIS (21) function.

The following basics should be considered, depending on application, when doing the setting calculations:

- Errors introduced by current and voltage instrument transformers, particularly under transient conditions.
- Inaccuracies in the line zero-sequence impedance data, and their effect on the calculated value of the ground-return compensation factor.
- The effect of infeed between the IED and the fault location, including the influence of different Z0/Z1 ratios of the various sources.

- The phase impedance of non transposed lines is not identical for all fault loops. The difference between the impedances for different phase-to-ground loops can be as large as 5-10% of the total line impedance.
- The effect of a load transfer between the IEDs of the protected fault resistance is considerable, the effect must be recognized.
- Zero-sequence mutual coupling from parallel lines.

Setting of zone1

The different errors mentioned earlier usually require a limitation of the underreaching zone (normally zone 1) to 75 - 90% of the protected line.

In case of parallel lines, consider the influence of the mutual coupling according tosection "Parallel line application with mutual coupling" and select the case(s) that are valid in your application. We recommend to compensate setting for the cases when the parallel line is in operation, out of service and not grounded and out of service and grounded in both ends. The setting of grounded fault reach should be selected to be <95% also when parallel line is out of service and grounded at both ends (worst case).

Setting of overreaching zone

The first overreaching zone (normally zone2) must detect faults on the whole protected line. Considering the different errors that might influence the measurement in the same way as for zone1, it is necessary to increase the reach of the overreaching zone to at least 120% of the protected line. The zone2 reach can be even higher if the fault infeed from adjacent lines at remote end are considerable higher than the fault current at the IED location.

The setting shall generally not exceed 80% of the following impedances:

- The impedance corresponding to the protected line, plus the first zone reach of the shortest adjacent line.
- The impedance corresponding to the protected line, plus the impedance of the maximum number of transformers operating in parallel on the bus at the remote end of the protected line.

If the requirements in the dotted paragraphs above gives a zone2 reach less than 120%, the time delay of zone2 must be increased by approximately 200ms to avoid unwanted operation in cases when the telecommunication for the short adjacent line at remote end is down during faults. The zone2 must not be reduced below 120% of the protected line section. The whole line must be covered under all conditions.

The requirement that the zone 2 shall not reach more than 80% of the shortest adjacent line at remote end is highlighted wit a simple example below.

If a fault occurs at point F (see figure 11, also for the explanation of all abbreviations used), the IED at point A senses the impedance:

$$\overline{Z}_{AF} = \overline{Z}_{AC} + \frac{\overline{I}_A + \overline{I}_B}{\overline{I}_A} \cdot \overline{Z}_{CF} = \overline{Z}_{AC} + \left(1 + \frac{\overline{I}_B}{\overline{I}_A}\right) \cdot \overline{Z}_{CF}$$

(Equation 213)

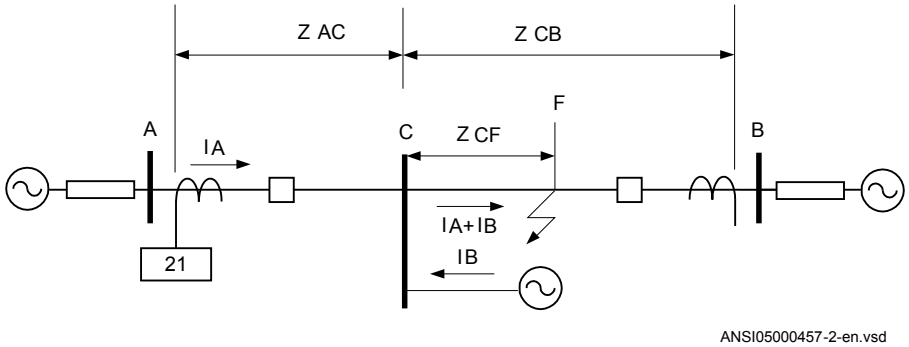

Figure 144:

Setting of reverse zone

The reverse zone is applicable for purposes of scheme communication logic, current reversal logic, weak-end-infeed logic, and so on. The same applies to the back-up protection of the bus bar or power transformers. It is necessary to secure, that it always covers the overreaching zone, used at the remote line IED for the telecommunication purposes.

Consider the possible enlarging factor that might exist due to fault infeed from adjacent lines. Equation 214 can be used to calculate the reach in reverse direction when the zone is used for blocking scheme, weak-end infeed and so on.

$$Zrev \geq 1.2 \cdot \left| ZL\text{-}Z2rem \right|$$

(Equation 214)

Where:

ZL	is the protected line impedance
Z2rem	is zone2 setting at remote end of protected line

In some applications it might be necessary to consider the enlarging factor due to fault current infeed from adjacent lines in the reverse direction in order to obtain certain sensitivity.

Setting of zones for parallel line application

Parallel line in service – Setting of zone1

With reference to section "Parallel line applications", the zone reach can be set to 85% of protected line.

Parallel line in service – setting of zone2

Overreaching zones (in general, zones 2 and 3) must overreach the protected circuit in all cases. The greatest reduction of a reach occurs in cases when both parallel circuits are in service with a single phase-to-ground fault located at the end of a protected line. The equivalent zero-sequence impedance circuit for this case is equal to the one in figure 138 in section "Parallel line applications".

The components of the zero-sequence impedance for the overreaching zones must be equal to at least:

$$R_{0E} = R_0 + R_{m0}$$

(Equation 215)

$$X_{0E} = X_0 + X_{m0}$$

(Equation 216)

Check the reduction of a reach for the overreaching zones due to the effect of the zero sequence mutual coupling. The reach is reduced for a factor:

$$K0 = 1 - \frac{Z0_m}{2 \cdot Z1 + Z0 + R_f}$$

(Equation 217)

If the denominator in equation 217 is called B and Z0m is simplified to X0m, then the real and imaginary part of the reach reduction factor for the overreaching zones can be written as:

$$\mathrm{Re}\left(\overline{K}0\right) = 1 - \frac{X0m \cdot \mathrm{Re}\left(B\right)}{\mathrm{Re}\left(B\right)^2 + \mathrm{Im}\left(B\right)^2}$$

(Equation 218)

$$\mathrm{Im}\left(\overline{K}0\right) = \frac{X0m \cdot \mathrm{Im}\left(B\right)}{\mathrm{Re}\left(B\right)^2 + \mathrm{Im}\left(B\right)^2}$$

(Equation 219)

Parallel line is out of service and grounded in both ends

Apply the same measures as in the case with a single set of setting parameters. This means that an underreaching zone must not overreach the end of a protected circuit for the single phase-to-ground faults. Set the values of the corresponding zone (zero-sequence resistance and reactance) equal to:

$$R_{0E} = R_0 \cdot \left(1 + \frac{X_{m0}^2}{R_0^2 + X_0^2}\right)$$

(Equation 220)

$$X_{0E} = X_0 \cdot \left(1 - \frac{X_{m0}^2}{R_0^2 + X_0^2}\right)$$

(Equation 221)

Setting of reach in resistive direction

Set the resistive reach independently for each zone, for phase-to-ground loop (*RIPE*) measurement.

Set separately the expected fault resistance for the phase-to-ground faults (*RFPE*) for each zone. Set all remaining reach setting parameters independently of each other for each distance zone.

The final reach in resistive direction for phase-to-ground fault loop measurement automatically follows the values of the line-positive and zero-sequence resistance, and at the end of the protected zone is equal to equation 222.

$$R = \frac{1}{3}(2 \cdot R1PE + R0PE) + RFPE$$

(Equation 222)

$$\varphi_{loop} = \arctan\left[\frac{2 \cdot X1PE + X0}{2 \cdot R1PE + R0}\right]$$

(Equation 223)

Setting of the resistive reach for the underreaching zone1 should follow the condition:

$$RFPE \leq 4.5 \cdot X1$$

(Equation 224)

Load impedance limitation, without load encroachment function

The following instructions is valid when the load encroachment function is not activated (*OperationLdCmp* is set to Off). If the load encroachment function is to be used for all or some of the measuring zones, the load limitation for those zones according to this chapter can be omitted. Check the maximum permissible resistive reach for any zone to ensure that there is a sufficient setting margin between the IED boundary and the minimum load impedance. The minimum load impedance (Ω/phase) is calculated as:

$$Z_{load\,\min} = \frac{V^2}{S}$$

(Equation 225)

Where:

V is the minimum phase-to-phase voltage in kV

S is the maximum apparent power in MVA.

The load impedance [Ω/phase] is a function of the minimum operation voltage and the maximum load current:

$$Z_{load} = \frac{V_{\min}}{\sqrt{3 \cdot I_{\max}}}$$

(Equation 226)

Minimum voltage V_{min} and maximum current Imax are related to the same operating conditions. Minimum load impedance occurs normally under emergency conditions.

Because a safety margin is required to avoid load encroachment under three-phase conditions and to guarantee correct healthy phase IED operation under combined heavy three-phase load and ground faults, consider both: phase-to-phase and phase-to-ground fault operating characteristics.

To avoid load encroachment for the phase-to-ground measuring elements, the set resistive reach of any distance protection zone must be less than 80% of the minimum load impedance.

$$RFPE \le 0.8 \cdot Z_{load}$$

(Equation 227)

This equation is applicable only when the loop characteristic angle for the single phase-to-ground faults is more than three times as large as the maximum expected load-impedance angle. More accurate calculations are necessary according to the equation below:

$$RFPE \le 0.8 \cdot Z_{load\,\min} \cdot \left[\cos\partial - \frac{2 \cdot R1 + R0}{2 \cdot X1 + X0} \cdot \sin\partial \right]$$

(Equation 228)

Where:

ϑ is a maximum load-impedance angle, related to the minimum load impedance conditions.

All this is applicable for all measuring zones when no power swing detection element is in the protection scheme. Use an additional safety margin of approximately 20% in cases when a power swing detection element is in the protection scheme, refer to the description of the power swing detection (ZMRPSB, 78) function.

Load impedance limitation, with load encroachment function activated

The parameters for load encroachment shaping of the characteristic are found in the description of the phase selection with load encroachment function, section "Resistive reach with load encroachment characteristic". If the characteristic for the impedance measurement shall be shaped with the load encroachment algorithm, the parameter *OperationLdCmp* in the phase selection has to be switched *On*.

Setting of minimum operating currents

The operation of the distance function will be blocked if the magnitude of the currents is below the set value of the parameter *IMinOpPE*.

The default setting of *IMinOpPE* is 20% of *IBase* where *IBase* is the chosen base current for the analogue input channels. The value have been proven in practice to be suitable in most of the applications. However, there might be applications where it is necessary to increase the sensitivity by reducing the minimum operating current down to 10% of the IED base current. This happens especially in cases, when the IED serves as a remote back-up protection on series of very long transmission lines.

If the load current compensation is activated, there is an additional criteria *IMinOpIN* that will block the phase-ground loop if the 3I0<*IMinOpIN*. The default setting of *IMinOpIN* is 5% of the IED base current *IBase*.

The minimum operating fault current is automatically reduced to 75% of its set value, if the distance protection zone has been set for the operation in reverse direction.

Setting of timers for distance protection zones

The required time delays for different distance-protection zones are independent of each other. Distance protection zone1 can also have a time delay, if so required for selectivity reasons. One can set the time delays for all zones (basic and optional) in a range of 0 to 60 seconds. The tripping function of each particular zone can be inhibited by setting the corresponding *Operation* parameter to *Off*. Different time delays are possible for the ph-E (*tPE*) measuring loops in each distance protection zone separately, to further increase the total flexibility of a distance protection.

3.6.5.3 Setting parameters

Table 65: ZMMPDIS (21) Group settings (basic)

Name	Values (Range)	Unit	Step	Default	Description
Operation	Disabled Enabled	-	-	Enabled	Disable/Enable Operation
IBase	1 - 99999	A	1	3000	Base current, i.e. rated current
Vbase	0.05 - 2000.00	kV	0.05	400.00	Base voltage, i.e. rated voltage
OperationDir	Disabled Non-directional Forward Reverse	-	-	Forward	Operation mode of directionality NonDir / Forw / Rev
X1	0.50 - 3000.00	ohm/p	0.01	30.00	Positive sequence reactance reach
R1	0.10 - 1000.00	ohm/p	0.01	5.00	Positive seq. resistance for zone characteristic angle
X0	0.50 - 9000.00	ohm/p	0.01	100.00	Zero sequence reactance reach
R0	0.50 - 3000.00	ohm/p	0.01	15.00	Zero seq. resistance for zone characteristic angle
RFPG	1.00 - 9000.00	ohm/l	0.01	100.00	Fault resistance reach in ohm/loop, Ph-G
Timer tPG	Disabled Enabled	-	-	Enabled	Operation mode Disable/ Enable of Zone timer, Ph-G
tPG	0.000 - 60.000	s	0.001	0.000	Time delay of trip, Ph-G
IMinPUPG	10 - 30	%IB	1	20	Minimum pickup phase current for Phase-to-ground loops
IMinOpIR	5 - 30	%IB	1	5	Minimum operate residual current for Phase-Ground loops

Table 66: ZMMAPDIS (21) Group settings (basic)

Name	Values (Range)	Unit	Step	Default	Description
Operation	Disabled Enabled	-	-	Enabled	Disable/Enable Operation
IBase	1 - 99999	A	1	3000	Base current, i.e. rated current
Vbase	0.05 - 2000.00	kV	0.05	400.00	Base voltage, i.e. rated voltage

Table continues on next page

Name	Values (Range)	Unit	Step	Default	Description
OperationDir	Disabled Non-directional Forward Reverse	-	-	Forward	Operation mode of directionality NonDir / Forw / Rev
X1	0.50 - 3000.00	ohm/p	0.01	40.00	Positive sequence reactance reach
R1	0.10 - 1000.00	ohm/p	0.01	5.00	Positive seq. resistance for zone characteristic angle
X0	0.50 - 9000.00	ohm/p	0.01	120.00	Zero sequence reactance reach
R0	0.50 - 3000.00	ohm/p	0.01	15.00	Zero seq. resistance for zone characteristic angle
RFPG	1.00 - 9000.00	ohm/l	0.01	100.00	Fault resistance reach in ohm/loop, Ph-G
Timer tPG	Disabled Enabled	-	-	Enabled	Operation mode Disable/ Enable of Zone timer, Ph-G
tPG	0.000 - 60.000	s	0.001	0.000	Time delay of trip, Ph-G
IMinPUPG	10 - 30	%IB	1	20	Minimum pickup phase current for Phase-to-ground loops

3.6.6 Additional distance protection directional function for earth faults ZDARDIR

Function description	IEC 61850 identification	IEC 60617 identification	ANSI/IEEE C37.2 device number
Additional distance protection directional function for earth faults	ZDARDIR	Z<	-

3.6.6.1 Application

The phase-to-ground impedance elements can be optionally supervised by a phase unselective directional function based on symmetrical components.

3.6.6.2 Setting guidelines

AngleRCA and *AngleOp*: these settings define the operation characteristic. Setting *AngleRCA* is used to turn the directional characteristic, if the expected fault current angle does not coincide with the polarizing quantity to produce the maximum torque. The angle is positive, if operating quantity lags the polarizing quantity and negative if it leads the polarizing quantity. The setting *AngleOp* (max. 180 degrees) defines the

wideness of the operating sector. The sector is mirror-symmetric along the MTA (Maximum Torque Axis).

Directional elements for ground-faults must operate at fault current values below the magnitude of load currents. As phase quantities are adversely affected by load, the use of sequence quantities are preferred as polarizing quantities for ground directional elements. Optionally six possibilities are available:

- Zero-sequence voltage polarized ($-V_0$)
- Negative-sequence voltage polarized (-V2)
- Zero-sequence current (I_0)
- Dual polarization ($-V_0/I_0$)
- Zero-sequence voltage with zero-sequence current compensation (-V0Comp)
- Negative-sequence voltage with negative-sequence current compensation (-V2Comp)

The zero-sequence voltage polarized ground directional unit compares the phase angles of zero sequence current I_0 with zero sequence voltage $-V_0$ at the location of the protection.

The negative-sequence voltage polarized ground directional unit compares correspondingly I_2 with -V2.

In general zero sequence voltage is higher than the negative sequence voltage at the fault, but decreases more rapidly the further away from the fault it is measured. This makes the $-V_0$ polarization preferable in short line applications, where no mutual coupling problems exist.

Negative sequence polarization has the following advantages compared to zero sequence polarization:

- on solidly grounded systems V2 may be larger than V_0. If the bus behind the IED location is a strong zero-sequence source, the negative sequence voltage available at the IED location is higher than the zero-sequence voltage.
- negative sequence polarization is not affected by zero sequence mutual coupling (zero sequence polarized directional elements may misoperate in parallel lines with high zero-sequence mutual coupling and isolated zero sequence sources).
- negative sequence polarization is less affected by the effects of VT neutral shift (possible caused by ungrounded or multiple grounds on the supplying VT neutral)
- no open-delta winding is needed in VTs as only 2 VTs are required ($V_2 = (V_{L12} - a \cdot V_{L23})/3$)

The zero sequence current polarized ground directional unit compares zero sequence current I0 of the line with some reference zero-sequence current, for example the

current in the neutral of a power transformer. The relay characteristic *AngleRCA* is fixed and equals 0 degrees. Care must be taken to ensure that neutral current direction remains unchanged during all network configurations and faults, and therefore all transformer configurations/constructions are not suitable for polarization.

In dual polarization, zero sequence voltage polarization and zero sequence current polarization elements function in an “OR-mode”. Typically when zero sequence current is high, then zero sequence voltage is low and vice versa. Thus combining a zero sequence voltage polarized and a zero sequence current polarized (neutral current polarized) directional element into one element, the IED can benefit from both elements as the two polarization measurements function in an OR mode complementing each other. Flexibility is also increased as zero sequence voltage polarization can be used, if the zero sequence current polarizing source is switched out of service. When the zero sequence polarizing current exceeds the set value for startPolCurrLevel, zero sequence current polarizing is used. For values of zero sequence polarizing current less than the set value for startPolCurrLevel, zero sequence voltage polarizing is used.

Zero-sequence voltage polarization with zero-sequence current compensation (-V0Comp) compares the phase angles of zero sequence current I_0 with zero-sequence voltage added by a phase-shifted portion of zero-sequence current (see equation 229) at the location of the protection. The factor k = setting K_{mag}. This type of polarization in intended for use in applications where the zero sequence voltage can be too small to be used as the polarizing quantity, and there is no zero sequence polarizing current (transformer neutral current) available. The zero sequence voltage is “boosted” by a portion of the measured line zero sequence current to form the polarizing quantity. This method requires that a significant difference must exist in the magnitudes of the zero sequence currents for close-up forward and reverse faults, that is, it is a requirement that |V0| >> |k · I0| for reverse faults, otherwise there is a risk that reverse faults can be seen as forward.

$$-V_0 + k \cdot I_0 \cdot e^{AngleRCA}$$

(Equation 229)

The negative-sequence voltage polarization with negative-sequence current compensation (-U2Comp) compares correspondingly I_2 with (see equation 230), and similarly it must be ensured that $|V_2| >> |k \cdot I_2|$ for reverse faults.

$$-V_2 + k \cdot I_2 \cdot e^{AngleRCA}$$

(Equation 230)

3.6.6.3 Setting parameters

Table 67: ZDARDIR Group settings (basic)

Name	Values (Range)	Unit	Step	Default	Description
IBase	1 - 99999	A	1	3000	Base setting for current values
VBase	0.05 - 2000.00	kV	0.05	400.00	Base setting for voltage level in kV
PolMode	-3U0 -V2 IPol Dual -3U0Comp -V2comp	-	-	-3U0	Polarization quantity for opt dir function for P-G faults
AngleRCA	-90 - 90	Deg	1	75	Characteristic relay angle (= MTA or base angle)
IPickup	1 - 200	%IB	1	5	Minimum operation current in % of IBase
VPolPU	1 - 100	%VB	1	1	Minimum polarizing voltage in % of VBase
IPolPU	5 - 100	%IB	1	10	Minimum polarizing current in % of IBase

Table 68: ZDARDIR Group settings (advanced)

Name	Values (Range)	Unit	Step	Default	Description
AngleOp	90 - 180	Deg	1	160	Operation sector angle
Kmag	0.50 - 3000.00	ohm	0.01	40.00	Boost-factor in -V0comp and -V2comp polarization

3.6.7 Mho impedance supervision logic ZSMGAPC

Function description	IEC 61850 identification	IEC 60617 identification	ANSI/IEEE C37.2 device number
Mho Impedance supervision logic	ZSMGAPC	-	-

3.6.7.1 Application

The Mho impedance supervision logic (ZSMGAPC) includes features for fault inception detection and high SIR detection. It also includes the functionality for loss of potential logic as well as for the pilot channel blocking scheme.

One part of ZSMGAPC function identifies a loss of phase potential that is the result of a long term (steady state) condition such as a blown fuse or an open voltage transformer winding or connection. This will block all trips by the distance protection since they are based on voltage measurement.

In the pilot channel blocking scheme a fault inception detected by a fast acting change detector is used to send a block signal to the remote end in order to block an overreaching zone. If the fault is later detected as a forward fault the earlier sent blocking signal is stopped.

The blocking scheme is very dependable because it will operate for faults anywhere on the protected line if the communication channel is out of service. Conversely, it is less secure than permissive schemes because it will trip for external faults within the reach of the tripping function if the communication channel is out of service. Inadequate speed or dependability can cause spurious tripping for external faults. Inadequate security can cause delayed tripping for internal faults.

ZSMGAPC function also includes functionality for blocking the sample based distance protection due to high SIR. SIR directly influences the fault voltage level for a given voltage level, and this is the major factor that affects the severity of CVT transients. Therefore, in cases where the SIR value is too high, further filtering of the measured signals will be needed.

3.6.7.2 Setting guidelines

IBase: *IBase* is normally set to the current value of the primary winding of the CT, but can also be set to the rated current of the bay. *IBase* shall be adapted to the actual application.

VBase: *VBase* is set to the voltage value of the primary winding of the VT. It is by default set to 400 kV and shall be adapted to the actual application.

PilotMode: Set *PilotMode* to *On* when pilot scheme is to be used. In this mode fault inception function will send a block signal to remote end to block the overreaching zones, when operated.

DeltaI: The setting of *DeltaI* for fault inception detection is by default set to 10% of *IBase*, which is suitable in most cases.

Delta3I0: The setting of the parameter *Delta3I0* for fault inception detection is by default set to 10% of *VBase*, which is suitable in most cases.

DeltaV: The setting of *DeltaV* for fault inception detection is by default set to 5% of *IBase*, which is suitable in most cases.

Delta3V0: The setting of *Delta3V0* for fault inception detection is by default set to 5% of *VBase*, which is suitable in most cases.

Zreach: The setting of *Zreach* must be adopted to the specific application. The setting is used in the SIR calculation for detection of high SIR.

SIRLevel: The setting of the parameter *SIRLevel* is by default set to 10. This is a suitable setting for applications with CVT to avoid transient overreach due to the CVT dynamics. If magnetic voltage transformers are used, set *SIRLevel* to 15 the highest level.

IMinOp: The minimum operate current for the SIR measurement is by default set to 20% of *IBase*.

3.6.7.3 Setting parameters

Table 69: ZSMGAPC Group settings (basic)

Name	Values (Range)	Unit	Step	Default	Description
IBase	1 - 99999	A	1	3000	Base value for current measurement
VBase	0.05 - 2000.00	kV	0.05	400.00	Base value for voltage measurement
PilotMode	Disabled Enabled	-	-	Disabled	Pilot mode Disable / Enable
Zreach	0.1 - 3000.0	ohm	0.1	38.0	Line impedance
IMinOp	10 - 30	%IB	1	20	Minimum operating current for SIR measurement

Table 70: ZSMGAPC Group settings (advanced)

Name	Values (Range)	Unit	Step	Default	Description
DeltaI	0 - 200	%IB	1	10	Current change level in %IB for fault inception detection
Delta3I0	0 - 200	%IB	1	10	Zero seq current change level in % of IB
DeltaV	0 - 100	%VB	1	5	Voltage change level in %VB for fault inception detection
Delta3V0	0 - 100	%VB	1	5	Zero seq voltage change level in % of VB
SIRLevel	5 - 15	-	1	10	Settable level for source impedance ratio

3.6.8 Faulty phase identification with load encroachment FMPSPDIS (21)

Function description	IEC 61850 identification	IEC 60617 identification	ANSI/IEEE C37.2 device number
Faulty phase identification with load encroachment for mho	FMPSPDIS	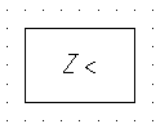	21

3.6.8.1 Application

The operation of transmission networks today is in many cases close to the stability limit. Due to environmental considerations the rate of expansion and reinforcement of the power system is reduced for example, difficulties to get permission to build new power lines.

The ability to accurate and reliable classifying the different types of fault so that single pole tripping and autoreclosing can be used plays an important roll in this matter.

Faulty phase identification with load encroachment for mho (FMPSPDIS) function is designed to accurately select the proper fault loop in the Distance protection function dependent on the fault type.

The heavy load transfer that is common in many transmission networks may in some cases be in opposite to the wanted fault resistance coverage. Therefore, FMPSPDIS has an built-in algorithm for load encroachment, which gives the possibility to enlarge the resistive setting of both the Phase selection with load encroachment and the measuring zones without interfering with the load.

The load encroachment algorithm and the blinder functions are always activated in the phase selector. The influence from these functions on the zone measurement characteristic has to be activated by switching the setting parameter *LoadEnchMode* for the respective measuring zone(s) to *Enabled*.

3.6.8.2 Setting guidelines

IBase: *IBase* is normally set to the current value of the primary winding of the CT, but can also be set to the rated current of the bay. It is by default set to 3000 A and shall be adapted to the actual application.

VBase: *VBase* is set to the voltage value of the primary winding of the VT. It is by default set to 400 kV and shall be adapted to the actual application.

INRelPG: The setting of *INRelPG* for release of the phase-to-ground loop is by default set to 20% of *IBase*. The default setting is suitable in most applications.

The setting must normally be set to at least 10% lower than the setting of *3I0BLK_PP*to give priority to open phase-to-ground loop. *INRelPG* must be above the normal un-balance current ($3I_0$) that might exist due to un-transposed lines.

The setting must also be set higher than the $3I_0$ that occurs when one pole opens in single pole trip applications.

3I0BLK_PP: The setting of *3I0BLK_PP* is by default set to 40% of *IBase*, which is suitable in most applications.

I1LowLevel: The setting of the positive current threshold *I1LowLevel* used in the sequence based part of the phase selector for identifying three-phase fault, is by default set to 10% of *IBase*.

The default setting is suitable in most cases, but must be checked against the minimum three-phase current that occurs at remote end of the line with reasonable fault resistance.

IMaxLoad: The setting *IMaxLoad* must be set higher than the maximum load current transfer during emergency conditions including a safety margin of at least 20%. The setting is proposed to be according to equation 231:

$$IMaxLoad = 1.2\ \mathrm{ILoad} \tag{Equation 231}$$

where:

1.2 is the security margin against the load current and

ILoad is the maximal load current during emergency conditions.

The current ILoad can be defined according to equation 232.

$$ILoad = \frac{S\max}{\sqrt{3 \cdot VLmn}} \tag{Equation 232}$$

where:

Smax is the maximal apparent power transfer during emergency conditions and

VLmn is the phase-to-phase voltage during the emergency conditions at the IED location.

Load encroachment

The load encroachment function has two setting parameters, *RLd* for the load resistance and *LdAngle* for the inclination of the load sector (see figure 145).

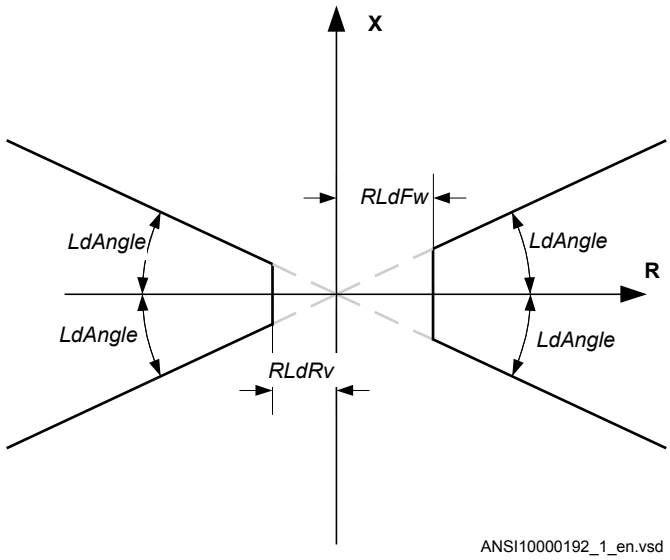

Figure 145: Load encroachment characteristic

The calculation of the apparent load impedance Z_{load} and minimum load impedance $Z_{loadmin}$ can be done according to equations:

$$Zload = \frac{V_{\min}}{\sqrt{3} \cdot \mathrm{I}_{\max}}$$

(Equation 233)

$$Zload \min = \frac{V^2}{S}$$

(Equation 234)

Where:

V is the minimum phase-to-phase voltage in kV

S is the maximum apparent power in MVA.

The load angle *LdAngle* can be derived according to equation 235:

$$LdAngle = a\cos\left(\frac{P\max}{S\max}\right)$$

(Equation 235)

where:

Pmax is the maximal active power transfer during emergency conditions and

Smax is the maximal apparent power transfer during emergency conditions.

The *RLd* can be calculated according to equation 236:

$$RLd = ZLoad \cdot \cos(LdAngle)$$

(Equation 236)

The setting of *RLd* and *LdAngle* is by default set to 80 ohm/phase and 20 degrees. Those values must be adapted to the specific application.

3.6.8.3 Setting parameters

Table 71: FMPSPDIS Group settings (basic)

Name	Values (Range)	Unit	Step	Default	Description
IBase	1 - 99999	A	1	3000	Base current
VBase	0.05 - 2000.00	kV	0.05	400.00	Base voltage
IMaxLoad	10 - 5000	%IB	1	200	Maximum load for identification of three phase fault in % of IBase
RLd	1.00 - 3000.00	ohm/p	0.01	80.00	Load encroachment resistive reach in ohm/phase
LdAngle	5 - 70	Deg	1	20	Load encroachment inclination of load angular sector

Table 72: FMPSPDIS Group settings (advanced)

Name	Values (Range)	Unit	Step	Default	Description
DeltaIMinOp	5 - 100	%IB	1	10	Delta current level in % of IBase
DeltaVMinOp	5 - 100	%VB	1	20	Delta voltage level in % of Vbase
V1Level	5 - 100	%VB	1	80	Pos seq voltage limit for identification of 3-ph fault
I1LowLevel	5 - 200	%IB	1	10	Pos seq current level for identification of 3-ph fault in % of IBase
V1MinOp	5 - 100	%VB	1	20	Minimum operate positive sequence voltage for ph sel

Table continues on next page

Name	Values (Range)	Unit	Step	Default	Description
V2MinOp	1 - 100	%VB	1	5	Minimum operate negative sequence voltage for ph sel
INRelPG	10 - 100	%IB	1	20	3I0 limit for release ph-g measuring loops in % of max phase current
3I0BLK_PP	10 - 100	%IB	1	40	3I0 limit for blocking phase-to-phase measuring loops in % of max phase current

3.6.9 Distance protection zone, quadrilateral characteristic, separate settings ZMRPDIS (21), ZMRAPDIS (21) and ZDRDIR (21D)

Function description	IEC 61850 identification	IEC 60617 identification	ANSI/IEEE C37.2 device number
Distance protection zone, quadrilateral characteristic, separate settings (zone 1)	ZMRPDIS	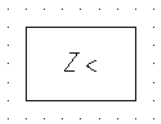	21
Distance protection zone, quadrilateral characteristic, separate settings (zone 2-5)	ZMRAPDIS	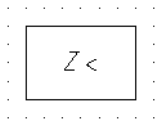	21

Function description	IEC 61850 identification	IEC 60617 identification	ANSI/IEEE C37.2 device number
Directional impedance quadrilateral	ZDRDIR	Z<->	21D

3.6.9.1 Application

Sub-transmission networks are being extended and often become more and more complex, consisting of a high number of multi-circuit and/or multi terminal lines of very different lengths. These changes in the network will normally impose more stringent demands on the fault clearing equipment in order to maintain an unchanged or increased security level of the power system.

The distance protection function in the IED is designed to meet basic requirements for application on transmission and sub-transmission lines although it also can be used on distribution levels.

System grounding

The type of system grounding plays an important role when designing the protection system. Some hints with respect to distance protection are highlighted below.

Solid grounded networks

In solidly grounded systems, the transformer neutrals are connected solidly to ground without any impedance between the transformer neutral and ground.

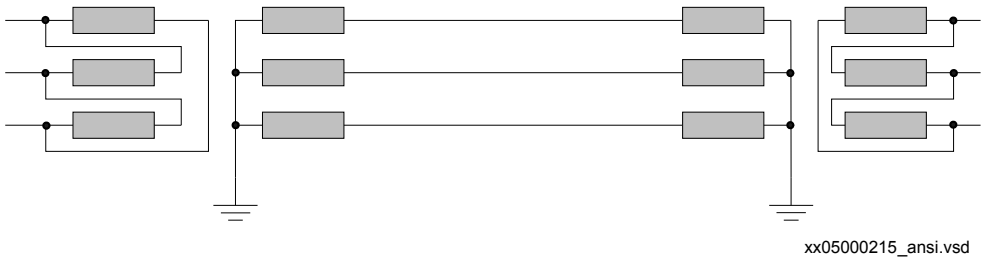

Figure 146: Solidly grounded network.

The ground-fault current is as high or even higher than the short-circuit current. The series impedances determine the magnitude of the fault current. The shunt admittance has very limited influence on the ground-fault current. The shunt admittance may, however, have some marginal influence on the ground-fault current in networks with long transmission lines.

The ground-fault current at single phase-to- ground in phase A can be calculated as equation 46:

$$3I_0 = \frac{3 \cdot V_A}{Z_1 + Z_2 + Z_0 + 3Z_f} = \frac{V_A}{Z_1 + Z_N + Z_f}$$

(Equation 237)

Where:

VA	is the phase-to- ground voltage (kV) in the faulty phase before fault
Z_1	is the positive sequence impedance (Ω/phase)
Z_2	is the negative sequence impedance (Ω/phase)
Z_0	is the zero sequence impedance (Ω/phase)
Z_f	is the fault impedance (Ω), often resistive
Z_N	is the ground return impedance defined as $(Z_0-Z_1)/3$

The voltage on the healthy phases is generally lower than 140% of the nominal phase-to-ground voltage. This corresponds to about 80% of the nominal phase-to-phase voltage.

The high zero sequence current in solid grounded networks makes it possible to use impedance measuring technique to detect ground-fault. However, distance protection has limited possibilities to detect high resistance faults and should therefore always be complemented with other protection function(s) that can carry out the fault clearance in those cases.

Effectively grounded networks

A network is defined as effectively grounded if the ground-fault factor f_e is less than 1.4. The ground-fault factor is defined according to equation 47.

$$f_e = \left| \frac{V_{max}}{V_{pn}} \right|$$

(Equation 238)

Where:

V_{max}	is the highest fundamental frequency voltage on one of the healthy phases at single phase-to-ground fault.
V_{pn}	is the phase-to-ground fundamental frequency voltage before fault.

Another definition for effectively grounded network is when the following relationships between the symmetrical components of the network source impedances are valid, see equation 48 and equation 49.

$$X_0 < 3 \cdot X_1$$

(Equation 239)

$$R_0 \leq R_1$$

(Equation 240)

Where

R_0	is the resistive zero sequence source impedance
X_0	is the reactive zero sequence source impedance
R_1	is the resistive positive sequence source impedance
X_1	is the reactive positive sequence source impedance

The magnitude of the ground-fault current in effectively grounded networks is high enough for impedance measuring element to detect ground-fault. However, in the same way as for solid grounded networks, distance protection has limited possibilities to

detect high resistance faults and should therefore always be complemented with other protection function(s) that can carry out the fault clearance in this case.

High impedance grounded networks

In high impedance networks, the neutral of the system transformers are connected to the ground through high impedance, mostly a reactance in parallel with a high resistor.

This type of network is many times operated in radial, but can also be found operating meshed networks.

What is typical for this type of network is that the magnitude of the ground fault current is very low compared to the short circuit current. The voltage on the healthy phases will get a magnitude of √3 times the phase voltage during the fault. The zero sequence voltage ($3V_0$) will have the same magnitude in different places in the network due to low voltage drop distribution.

The magnitude of the total fault current can be calculated according to equation 50.

$$3I_0 = \sqrt{I_R^2 + \left(I_L - I_C\right)^2}$$

(Equation 241)

Where:

$3I_0$	is the ground-fault current (A)
I_R	is the current through the neutral point resistor (A)
I_L	is the current through the neutral point reactor (A)
I_C	is the total capacitive ground-fault current (A)

The neutral point reactor is normally designed so that it can be tuned to a position where the reactive current balances the capacitive current from the network that is:

$$\omega L = \frac{1}{3 \cdot \omega \cdot C}$$

(Equation 242)

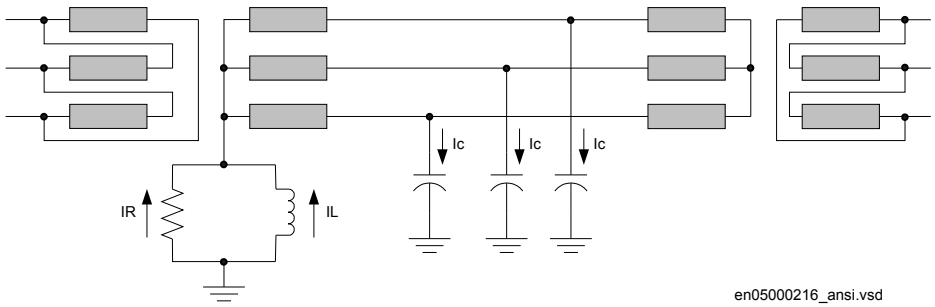

Figure 147: High impedance grounded network.

The operation of high impedance grounded networks is different compared to solid grounded networks where all major faults have to be cleared very fast. In high impedance grounded networks, some system operators do not clear single phase-to-ground faults immediately; they clear the line later when it is more convenient. In case of cross-country faults, many network operators want to selectively clear one of the two ground-faults. To handle this type phenomena, a separate function called Phase preference logic (PPLPHIZ) is needed, which is not common to be used in transmission applications.

In this type of network, it is mostly not possible to use distance protection for detection and clearance of ground-faults. The low magnitude of the ground-fault current might not give pickup of the zero sequence measurement element or the sensitivity will be too low for acceptance. For this reason a separate high sensitive ground-fault protection is necessary to carry out the fault clearance for single phase-to-ground fault.

Fault infeed from remote end

All transmission and most all sub-transmission networks are operated meshed. Typical for this type of network is that fault infeed from remote end will happen when fault occurs on the protected line. The fault current infeed will enlarge the fault impedance seen by the distance protection. This effect is very important to keep in mind when both planning the protection system and making the settings.

With reference to figure 55, the equation for the bus voltage V_A at A side is:

$$\overline{V}_A = \overline{I}_A \cdot p \cdot Z_L + (\overline{I}_A + \overline{I}_B) \cdot R_f$$

(Equation 243)

If we divide V_A by I_A we get Z present to the IED at A side.

$$\overline{Z}_A = \frac{\overline{V}_a}{\overline{I}_A} = p \cdot \overline{Z}_L + \frac{\overline{I}_A + \overline{I}_B}{\overline{I}_A} \cdot R_f$$

(Equation 244)

The infeed factor $(I_A+I_B)/I_A$ can be very high, 10-20 depending on the differences in source impedances at local and remote end.

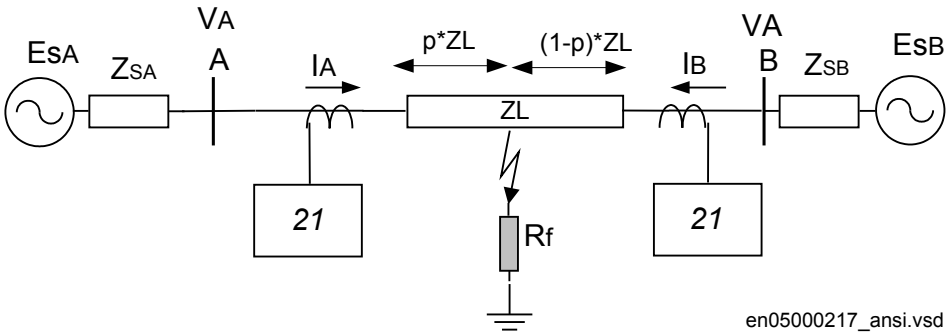

Figure 148: Influence of fault current infeed from remote line end

The effect of fault current infeed from remote line end is one of the most driving factors for justify complementary protection to distance protection.

When the line is heavily loaded, the distance protection at the exporting end will have a tendency to overreach. To handle this phenomenon, the IED has an adaptive built in algorithm which compensates the overreach tendency of zone 1, at the exporting end. No settings are required for this function.

Load encroachment

In some cases the load impedance might enter the zone characteristic without any fault on the protected line. The phenomenon is called load encroachment and it might occur when an external fault is cleared and high emergency load is transferred on the protected line. The effect of load encroachment is illustrated to the left in figure 56. The entrance of the load impedance inside the characteristic is of course not allowed and the way to handle this with conventional distance protection is to consider this with the settings, that is, to have a security margin between the distance zone and the minimum load impedance. This has the drawback that it will reduce the sensitivity of the protection, that is, the ability to detect resistive faults.

The IED has a built in function which shapes the characteristic according to the right figure of figure 56. The load encroachment algorithm will increase the possibility to detect high fault resistances, especially for phase-to-ground faults at remote line end. For example, for a given setting of the load angle *LdAngle* for Phase selection with load encroachment, quadrilateral characteristic function (FRPSPDIS, 21), the resistive blinder for the zone measurement can be expanded according to the figure 56 given higher fault resistance coverage without risk for unwanted operation due to load encroachment. This is valid in both directions.

The use of the load encroachment feature is essential for long heavy loaded lines, where there might be a conflict between the necessary emergency load transfer and

necessary sensitivity of the distance protection. The function can also preferably be used on heavy loaded medium long lines. For short lines, the major concern is to get sufficient fault resistance coverage and load encroachment is not a major problem. So, for short lines, the load encroachment function could preferably be switched off. See section "Load impedance limitation, without load encroachment function".

The settings of the parameters for load encroachment are done in (21), FRPSPDIS (21) function.

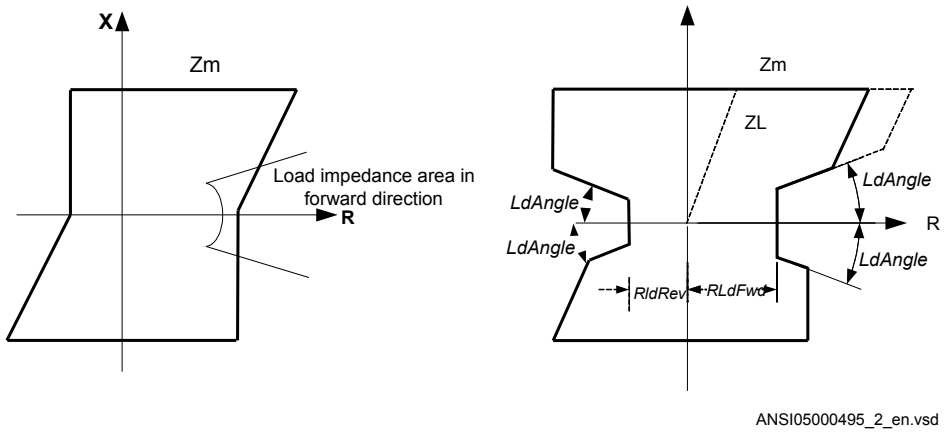

Figure 149: Load encroachment phenomena and shaped load encroachment characteristic defined in Phase selection and load encroachment function (FRPSPDIS, 21)

Short line application

Transmission line lengths for protection application purposes are classified as short, medium and long . The definition of short, medium and long lines is found in IEEE Std C37.113-1999.). The length classification is defined by the ratio of the source impedance at the protected line's terminal to the protected line's impedance (SIR). SIR's of about 4 or greater generally define a short line. Medium lines are those with SIR's greater than 0.5 and less than 4

In short line applications, the major concern is to get sufficient fault resistance coverage. Load encroachment is not so common. The line length that can be recognized as a short line is not a fixed length; it depends on system parameters such as voltage and source impedance, see table 48.

Table 73: Typical length of short and very short line

Line category	Vn	Vn
	110 kV	500 kV
Very short line	0.75 -3.5mile	3-15 miles
Short line	4-7 miles	15-30 miles

The IED's ability to set resistive and reactive reach independent for positive and zero sequence fault loops and individual fault resistance settings for phase-to-phase and phase-to-ground fault together with load encroachment algorithm improves the possibility to detect high resistive faults without conflict with the load impedance, see figure 56.

For very short line applications, the underreaching zone 1 can not be used due to the voltage drop distribution throughout the line will be too low causing risk for overreaching.It is difficult, if not impossible, to apply distance protection for short lines. It is possible to apply a overreaching pilot communication based POTT or Blocking scheme protection for such lines to have fast tripping along the entire line. Usually a unit protection, based on comparison of currents at the ends of the lines is applied for such lines.

Load encroachment is normally no problems for short line applications.

Long transmission line application

For long transmission lines, the margin to the load impedance, that is, to avoid load encroachment, will normally be a major concern. It is well known that it is difficult to achieve high sensitivity for phase-to-ground fault at remote line end of a long line when the line is heavy loaded.

What can be recognized as long lines with respect to the performance of distance protection can generally be described as in table 49, long lines have Source impedance ratio (SIR’s) less than 0.5.

Table 74: Typical length of long and very long lines

Line category	Vn	Vn
	110 kV	500 kV
Long lines	45-60 miles	200-250 miles
Very long lines	>60 miles	>250 miles

The IED's ability to set resistive and reactive reach independent for positive and zero sequence fault loops and individual fault resistance settings for phase-to-phase and phase-to-ground fault together with load encroachment algorithm improves the possibility to detect high resistive faults at the same time as the security is improved (risk for unwanted trip due to load encroachment is eliminated), see figure 56.

Parallel line application with mutual coupling

General

Introduction of parallel lines in the network is increasing due to difficulties to get necessary area for new lines.

Parallel lines introduce an error in the measurement due to the mutual coupling between the parallel lines. The lines need not be of the same voltage in order to

experience mutual coupling, and some coupling exists even for lines that are separated by 100 meters or more. The mutual coupling does influence the zero sequence impedance to the fault point but it does not normally cause voltage inversion.

It can be shown from analytical calculations of line impedances that the mutual impedances for positive and negative sequence are very small (< 1-2%) of the self impedance and it is a practice to neglect them.

From an application point of view there exists three types of network configurations (classes) that must be considered when making the settings for the protection function.

The different network configuration classes are:

1. Parallel line with common positive and zero sequence network
2. Parallel circuits with common positive but isolated zero sequence network
3. Parallel circuits with positive and zero sequence sources isolated.

One example of class 3 networks could be the mutual coupling between a 400kV line and rail road overhead lines. This type of mutual coupling is not so common although it exists and is not treated any further in this manual.

For each type of network class, there are three different topologies; the parallel line can be in service, out of service, out of service and grounded in both ends.

The reach of the distance protection zone 1 will be different depending on the operation condition of the parallel line. This can be handled by the use of different setting groups for handling the cases when the parallel line is in operation and out of service and grounded at both ends.

The distance protection within the IED can compensate for the influence of a zero sequence mutual coupling on the measurement at single phase-to-ground faults in the following ways, by using:

- The possibility of different setting values that influence the ground-return compensation for different distance zones within the same group of setting parameters.
- Different groups of setting parameters for different operating conditions of a protected multi circuit line.

Most multi circuit lines have two parallel operating circuits.

Parallel line applications

This type of networks are defined as those networks where the parallel transmission lines terminate at common nodes at both ends.

The three most common operation modes are:

1. parallel line in service.
2. parallel line out of service and grounded.
3. parallel line out of service and not grounded.

Parallel line in service

This type of application is very common and applies to all normal sub-transmission and transmission networks.

Let us analyze what happens when a fault occurs on the parallel line see figure 58.

From symmetrical components, we can derive the impedance Z at the relay point for normal lines without mutual coupling according to equation 54.

$$\overline{Z} = \frac{\overline{U}_{ph}}{\overline{I}_{ph} + 3\overline{I}_0 \cdot \frac{\overline{Z}_0 - \overline{Z}_1}{3 \cdot \overline{Z}_1}} = \frac{\overline{U}_{ph}}{\overline{I}_{ph} + 3\overline{I}_0 \cdot \overline{K}_N}$$

(Equation 245)

$$\overline{Z} = \frac{\overline{V}_{ph}}{\overline{I}_{ph} + 3\overline{I}_0 \cdot \frac{\overline{Z}_0 - \overline{Z}_1}{3 \cdot \overline{Z}_1}} = \frac{\overline{V}_{ph}}{\overline{I}_{ph} + 3\overline{I}_0 \cdot \overline{K}_N}$$

(Equation 245)

Where:

V_{ph}	is phase to ground voltage at the relay point
I_{ph}	is phase current in the faulty phase
$3I_0$	is ground fault current
Z_1	is positive sequence impedance
Z_0	is zero sequence impedance

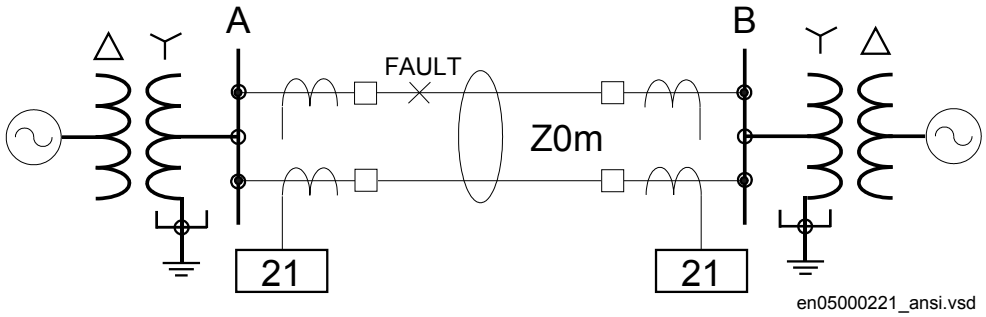

Figure 150: Class 1, parallel line in service.

The equivalent zero sequence circuit of the lines can be simplified, see figure 59.

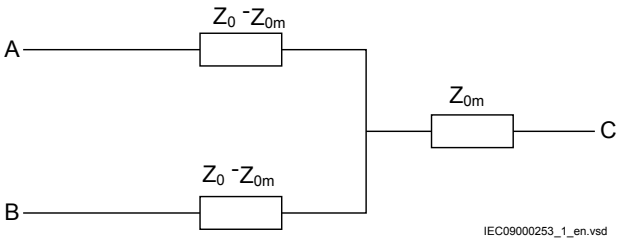

Figure 151: Equivalent zero sequence impedance circuit of the double-circuit, parallel, operating line with a single phase-to-ground fault at the remote busbar.

When mutual coupling is introduced, the voltage at the relay point A will be changed according to equation 55.

$$V_{ph} = \overline{Z}1_L \cdot \left(\overline{I}_{ph} + 3\overline{I}_0 \cdot \frac{\overline{Z}0_L - \overline{Z}1_L}{3 \cdot \overline{Z}1_L} \cdot 3\overline{I}_{0p} \frac{\overline{Z}0_m}{3 \cdot \overline{Z}1_L} \right)$$

(Equation 246)

By dividing equation 55 by equation 54 and after some simplification we can write the impedance present to the relay at A side as:

$$Z = \overline{Z}_t \left(1 + \frac{3\overline{I}0 \cdot \overline{K}Nm}{\overline{I}ph + 3\overline{I}0 \cdot \overline{K}N} \right)$$

(Equation 247)

Where:

KNm = Z0m/(3 · Z1L)

The second part in the parentheses is the error introduced to the measurement of the line impedance.

If the current on the parallel line has negative sign compared to the current on the protected line, that is, the current on the parallel line has an opposite direction compared to the current on the protected line, the distance function will overreach. If the currents have the same direction, the distance protection will underreach.

Maximum overreach will occur if the fault current infeed from remote line end is weak. If considering a single phase-to-ground fault at 'p' unit of the line length from A to B on the parallel line for the case when the fault current infeed from remote line end is zero, the voltage V_A in the faulty phase at A side as in equation 57.

$$V_A = p \cdot Z1_L \left(I_{ph} + K_N \cdot 3I_0 + K_{Nm} \cdot 3I_{0p} \right)$$

(Equation 248)

One can also notice that the following relationship exists between the zero sequence currents:

$$3I_0 \cdot Z0_L = 3I0p \cdot Z0_L \left(2 - p\right)$$

(Equation 249)

Simplification of equation 58, solving it for 3I0p and substitution of the result into equation 57 gives that the voltage can be drawn as:

$$V_A = p \cdot Z1_L \left(Iph + K_N \cdot 3I0 + KN_m \cdot \frac{3I0 \cdot p}{2 - p} \right)$$

(Equation 250)

If we finally divide equation 59 with equation 54 we can draw the impedance present to the IED as

$$Z = p \cdot Z1_L \left[\frac{\left(Iph + KN \cdot 3I0 + KN_m \cdot \frac{3I_0 \cdot p}{2 - p} \right)}{Iph + 3I_0 \cdot KN} \right]$$

(Equation 251)

Calculation for a 400 kV line, where we for simplicity have excluded the resistance, gives with X1L=0.48 Ohm/Mile, X0L=1.4Ohms/Mile, zone 1 reach is set to 90% of the line reactance p=71% that is, the protection is underreaching with approximately 20%.

The zero sequence mutual coupling can reduce the reach of distance protection on the protected circuit when the parallel line is in normal operation. The reduction of the reach is most pronounced with no current infeed in the IED closest to the fault. This reach reduction is normally less than 15%. But when the reach is reduced at one line end, it is proportionally increased at the opposite line end. So this 15% reach reduction does not significantly affect the operation of a permissive underreaching scheme.

Parallel line out of service and grounded

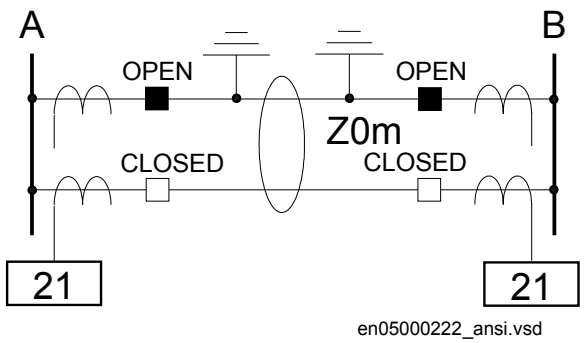

Figure 152: The parallel line is out of service and grounded.

When the parallel line is out of service and grounded at both line ends on the bus bar side of the line CTs so that zero sequence current can flow on the parallel line, the equivalent zero sequence circuit of the parallel lines will be according to figure 61.

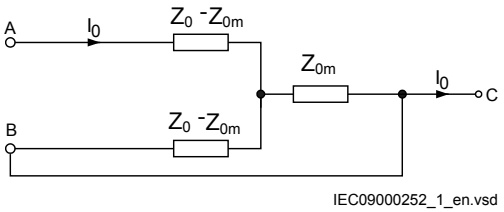

Figure 153: Equivalent zero sequence impedance circuit for the double-circuit line that operates with one circuit disconnected and grounded at both ends.

Here the equivalent zero sequence impedance is equal to Z_0-Z_0m in parallel with (Z_0-Z_{0m})/Z_0-Z_{0m}+Z_{0m} which is equal to equation 61.

$$\overline{Z}_E = \frac{\overline{Z}_0^2 - \overline{Z}_{om}^2}{\overline{Z}_0}$$

(Equation 252)

The influence on the distance measurement will be a considerable overreach, which must be considered when calculating the settings. It is recommended to use a separate setting group for this operation condition since it will reduce the reach considerably when the line is in operation.

All expressions below are proposed for practical use. They assume the value of zero sequence, mutual resistance R_{0m} equals to zero. They consider only the zero sequence, mutual reactance X_{0m}. Calculate the equivalent X_{0E} and R_{0E} zero sequence parameters according to equation 62 and equation 63 for each particular line section and use them for calculating the reach for the underreaching zone.

$$R_{0E} = R_0 \bullet \left(1 + \frac{X_{0m}^{\ 2}}{R_0^2 + X_0^2}\right)$$

(Equation 253)

$$X_{0E} = X_0 \bullet \left(1 - \frac{X_{0m}^{\ 2}}{R_0^2 + X_0^2}\right)$$

(Equation 254)

Parallel line out of service and not grounded

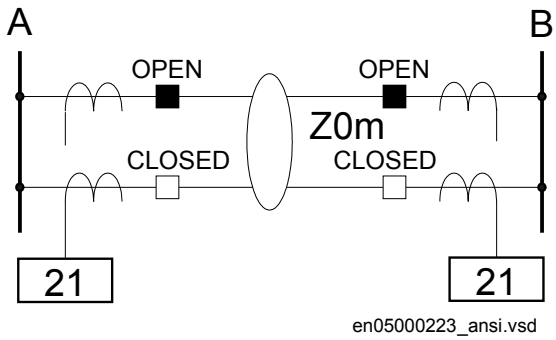

Figure 154: Parallel line is out of service and not grounded.

When the parallel line is out of service and not grounded, the zero sequence on that line can only flow through the line admittance to the ground. The line admittance is high which limits the zero sequence current on the parallel line to very low values. In practice, the equivalent zero sequence impedance circuit for faults at the remote bus bar can be simplified to the circuit shown in figure 62

The line zero sequence mutual impedance does not influence the measurement of the distance protection in a faulty circuit.

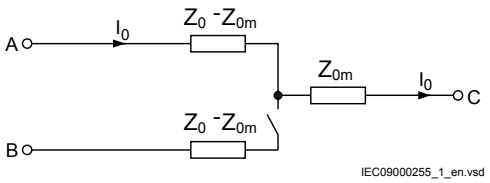

Figure 155: Equivalent zero sequence impedance circuit for a double-circuit line with one circuit disconnected and not grounded.

Tapped line application

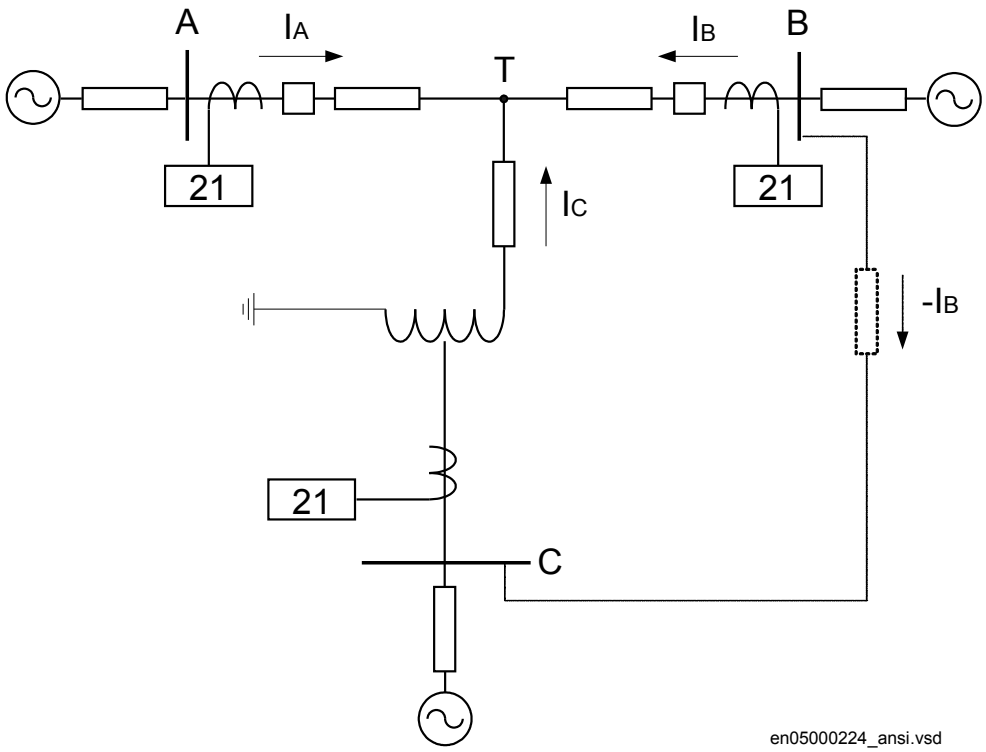

Figure 156: Example of tapped line with Auto transformer.

This application gives rise to similar problem that was highlighted in section "Fault infeed from remote end" , that is increased measured impedance due to fault current infeed. For example, for faults between the T point and B station the measured impedance at A and C will be

$$\bar{Z}_A = \bar{Z}_{AT} + \frac{\bar{I}_A + \bar{I}_C}{\bar{I}_A} \cdot \bar{Z}_{TF}$$

(Equation 255)

$$\bar{Z}_C = \bar{Z}_{Trf} + (\bar{Z}_{CT} + \frac{\dot{I}_A + \dot{I}_C}{\dot{I}_C} \cdot \bar{Z}_{TB}) \cdot (\frac{V2}{V1})^2$$

(Equation 256)

Where:

Z_{AT} and Z_{CT}	is the line impedance from the A respective C station to the T point.
I_A and I_C	is fault current from A respective C station for fault between T and B.
V2/V1	Transformation ratio for transformation of impedance at V1 side of the transformer to the measuring side V2 (it is assumed that current and voltage distance function is taken from V2 side of the transformer).
Z_{TF}	is the line impedance from the T point to the fault (F).
Z_{Trf}	Transformer impedance

For this example with a fault between T and B, the measured impedance from the T point to the fault will be increased by a factor defined as the sum of the currents from T point to the fault divided by the IED current. For the IED at C, the impedance on the high voltage side V1 has to be transferred to the measuring voltage level by the transformer ratio.

Another complication that might occur depending on the topology is that the current from one end can have a reverse direction for fault on the protected line. For example, for faults at T the current from B might go in reverse direction from B to C depending on the system parameters (see the dotted line in figure 64), given that the distance protection in B to T will measure wrong direction.

In three-end application, depending on the source impedance behind the IEDs, the impedances of the protected object and the fault location, it might be necessary to accept zone 2 trip in one end or sequential trip in one end.

Generally for this type of application it is difficult to select settings of zone 1 that both gives overlapping of the zones with enough sensitivity without interference with other zone 1 settings, that is without selectivity conflicts. Careful fault calculations are necessary to determine suitable settings and selection of proper scheme communication.

Fault resistance

The performance of distance protection for single phase-to-ground faults is very important, because normally more than 70% of the faults on transmission lines are

single phase-to-ground faults. At these faults, the fault resistance is composed of three parts: arc resistance, resistance of a tower construction, and tower-footing resistance.The resistance is also depending on the presence of ground shield conductor at the top of the tower, connecting tower-footing resistance in parallel. The arc resistance can be calculated according to Warrington's formula:

$$Rarc = \frac{28707 \cdot L}{I^{1.4}}$$

(Equation 257)

where:

L represents the length of the arc (in meters). This equation applies for the distance protection zone 1. Consider approximately three times arc foot spacing for the zone 2 and wind speed of approximately 30 m/h

I is the actual fault current in A.

In practice, the setting of fault resistance for both phase-to-ground*RFPG* and phase-to-phase *RFPP* should be as high as possible without interfering with the load impedance in order to obtain reliable fault detection.

3.6.9.2 Setting guidelines

General

The settings for Distance measuring zones, quadrilateral characteristic ((ZMRPDIS, 21) are done in primary values. The instrument transformer ratio that has been set for the analogue input module is used to automatically convert the measured secondary input signals to primary values used in (ZMRPDIS, 21).

The following basics must be considered, depending on application, when doing the setting calculations:

- Errors introduced by current and voltage instrument transformers, particularly under transient conditions.
- Inaccuracies in the line zero sequence impedance data, and their effect on the calculated value of the ground-return compensation factor.
- The effect of infeed between the IED and the fault location, including the influence of different Z_0/Z_1 ratios of the various sources.
- The phase impedance of non transposed lines is not identical for all fault loops. The difference between the impedances for different phase-to-ground loops can be as large as 5-10% of the total line impedance.
- The effect from load transfer together with fault resistance may be considerable in some extreme cases.
- Zero sequence mutual coupling from parallel lines.

Setting of zone 1

The different errors mentioned earlier usually require a limitation of the underreaching zone (normally zone 1) to 75 - 90% of the protected line.

In case of parallel lines, consider the influence of the mutual coupling according to section "Parallel line application with mutual coupling" and select the case(s) that are valid in the particular application. By proper setting it is possible to compensate for the cases when the parallel line is in operation, out of service and not grounded and out of service and grounded in both ends. The setting of ground-fault reach should be selected to be <95% also when parallel line is out of service and grounded at both ends (worst case).

Setting of overreaching zone

The first overreaching zone (normally zone 2) must detect faults on the whole protected line. Considering the different errors that might influence the measurement in the same way as for zone 1, it is necessary to increase the reach of the overreaching zone to at least 120% of the protected line. The zone 2 reach can be even longer if the fault infeed from adjacent lines at remote end are considerable higher than the fault current at the IED location.

The setting shall generally not exceed 80% of the following impedances:

- The impedance corresponding to the protected line, plus the first zone reach of the shortest adjacent line.
- The impedance corresponding to the protected line, plus the impedance of the maximum number of transformers operating in parallel on the bus at the remote end of the protected line.

Larger overreach than the mentioned 80% can often be acceptable due to fault current infeed from other lines. This requires however analysis by means of fault calculations.

If any of the above indicates a zone 2 reach less than 120%, the time delay of zone 2 must be increased by approximately 200ms to avoid unwanted operation in cases when the telecommunication for the short adjacent line at remote end is down during faults. The zone 2 must not be reduced below 120% of the protected line section. The whole line must be covered under all conditions.

The requirement that the zone 2 shall not reach more than 80% of the shortest adjacent line at remote end is highlighted in the example below.

If a fault occurs at point F see figure 65, the IED at point A senses the impedance:

$$\overline{Z}_{AF} = \overline{Z}_{AC} + \frac{\overline{I}_A + \overline{I}_B}{\overline{I}_A} \cdot \overline{Z}_{CF} = \overline{Z}_{AC} + \left(1 + \frac{\overline{I}_B}{\overline{I}_A}\right) \cdot \overline{Z}_{CF}$$

(Equation 258)

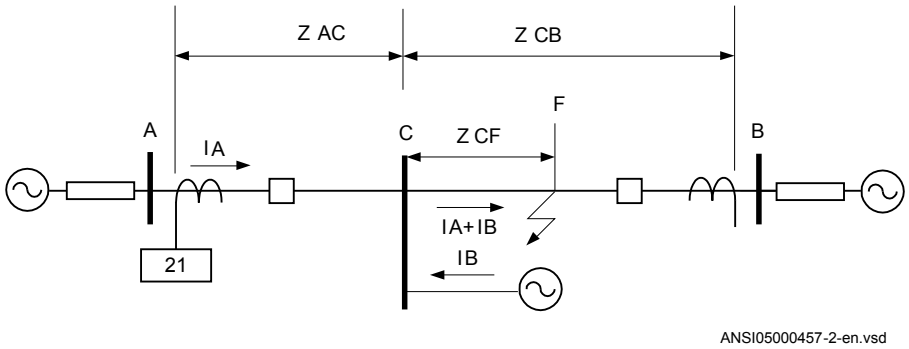

Figure 157: Setting of overreaching zone

Setting of reverse zone

The reverse zone is applicable for purposes of scheme communication logic, current reversal logic, weak-end infeed logic, and so on. The same applies to the back-up protection of the bus bar or power transformers. It is necessary to secure, that it always covers the overreaching zone, used at the remote line IED for the telecommunication purposes.

Consider the possible enlarging factor that might exist due to fault infeed from adjacent lines. Equation 73 can be used to calculate the reach in reverse direction when the zone is used for blocking scheme, weak-end infeed etc.

$$\overline{Z}_{rev} \geq 1.2 \cdot \left| \overline{Z}2_{rem} - \overline{Z}_{L} \right|$$

(Equation 259)

Where:

Z_L is the protected line impedance

$Z2_{rem}$ is zone 2 setting at remote end of protected line.

In many applications it might be necessary to consider the enlarging factor due to fault current infeed from adjacent lines in the reverse direction in order to obtain certain sensitivity.

Setting of zones for parallel line application

Parallel line in service – Setting of zone 1

With reference to section "Parallel line applications", the zone reach can be set to 85% of protected line.

However, influence of mutual impedance has to be taken into account.

Parallel line in service – setting of zone 2

Overreaching zones (in general, zones 2 and 3) must overreach the protected circuit in all cases. The greatest reduction of a reach occurs in cases when both parallel circuits are in service with a single phase-to-ground fault located at the end of a protected line. The equivalent zero sequence impedance circuit for this case is equal to the one in figure 59 in section "Parallel line applications".

The components of the zero sequence impedance for the overreaching zones must be equal to at least:

$$R_{0E} = R_0 + R_{m0}$$

(Equation 260)

$$X_{0E} = X_0 + X_{m0}$$

(Equation 261)

Check the reduction of a reach for the overreaching zones due to the effect of the zero sequence mutual coupling. The reach is reduced for a factor:

$$K0 = 1 - \frac{Z0_m}{2 \cdot Z1 + Z0 + R_f}$$

(Equation 262)

If the denominator in equation 76 is called B and Z0m is simplified to X0m, then the real and imaginary part of the reach reduction factor for the overreaching zones can be written as:

$$\mathrm{Re}\left(\overline{K}0\right) = 1 - \frac{X0m \cdot \mathrm{Re}\left(B\right)}{\mathrm{Re}\left(B\right)^2 + \mathrm{Im}\left(B\right)^2}$$

(Equation 263)

$$\mathrm{Im}\left(\overline{K}0\right) = \frac{X0m \cdot \mathrm{Im}\left(B\right)}{\mathrm{Re}\left(B\right)^2 + \mathrm{Im}\left(B\right)^2}$$

(Equation 264)

Parallel line is out of service and grounded in both ends

Apply the same measures as in the case with a single set of setting parameters. This means that an underreaching zone must not overreach the end of a protected circuit for the single phase-to-ground faults.

Set the values of the corresponding zone (zero-sequence resistance and reactance) equal to:

$$R_{0E} = R_0 \cdot \left(1 + \frac{X_{m0}^2}{R_0^2 + X_0^2}\right)$$

(Equation 265)

$$X_{0E} = X_0 \cdot \left(1 - \frac{X_{m0}^2}{R_0^2 + X_0^2}\right)$$

(Equation 266)

Setting of reach in resistive direction

Set the resistive independently for each zone.

Set separately the expected fault resistance for phase-to-phase faults *RFPP* and for the phase-to-ground faults *RFPG* for each zone. For each distance zone, set all remaining reach setting parameters independently of each other.

The final reach in resistive direction for phase-to-ground fault loop measurement automatically follows the values of the line-positive and zero-sequence resistance, and at the end of the protected zone is equal to equation 81.

$$R = \frac{1}{3}\left(2 \cdot R1 + R0\right) + RFPG$$

(Equation 267)

$$\varphi loop = \arctan\left[\frac{2 \cdot X1 + X0}{2 \cdot R1 + R0}\right]$$

(Equation 268)

Setting of the resistive reach for the underreaching zone 1 should follow the condition to minimize the risk for overreaching:

$$RFPG \leq 4.5 \cdot X1$$

(Equation 269)

The fault resistance for phase-to-phase faults is normally quite low, compared to the fault resistance for phase-to-ground faults. To minimize the risk for overreaching, limit the setting of the zone1 reach in resistive direction for phase-to-phase loop measurement to:

$$RFPP \leq 3 \cdot X1$$

(Equation 270)

Load impedance limitation, without load encroachment function

The following instructions are valid when Phase selection with load enchroachment, quadrilateral characteristic function FRPSPDIS (21) is not activated. To deactivate the function, the setting of the load resistance *RLdFwd* and *RLdRev* in FRPSPDIS (21) must be set to max value (3000). If FRPSPDIS (21) is to be used for all or some of the measuring zones, the load limitation for those zones according to this chapter can be omitted. Check the maximum permissible resistive reach for any zone to ensure that there is a sufficient setting margin between the boundary and the minimum load impedance. The minimum load impedance (Ω/phase) is calculated as:

$$Z_{load\,min} = \frac{V^2}{S}$$

(Equation 271)

Where:

V is the minimum phase-to-phase voltage in kV

S is the maximum apparent power in MVA.

The load impedance [Ω/phase] is a function of the minimum operation voltage and the maximum load current:

$$Z_{load} = \frac{V_{min}}{\sqrt{3} \cdot I_{max}}$$

(Equation 272)

Minimum voltage V_{min} and maximum current I_{max} are related to the same operating conditions. Minimum load impedance occurs normally under emergency conditions.

As a safety margin is required to avoid load encroachment under three-phase conditions and to guarantee correct healthy phase IED operation under combined heavy three-phase load and ground faults, consider both: phase-to-phase and phase-to-ground fault operating characteristics.

To avoid load encroachment for the phase-to-ground measuring elements, the set resistive reach of any distance protection zone must be less than 80% of the minimum load impedance.

$$RFPG \le 0.8 \cdot Z_{load}$$

(Equation 273)

This equation is applicable only when the loop characteristic angle for the single phase-to-ground faults is more than three times as large as the maximum expected load-impedance angle. For the case when the loop characteristic angle is less than three times the load-impedance angle, more accurate calculations are necessary according to equation 88.

$$RFPG \le 0.8 \cdot Z_{load\,\min} \cdot \left[\cos\partial - \frac{2 \cdot R1 + R0}{2 \cdot X1 + X0} \cdot \sin\partial \right]$$

(Equation 274)

Where:

∂ is a maximum load-impedance angle, related to the maximum load power.

To avoid load encroachment for the phase-to-phase measuring elements, the set resistive reach of any distance protection zone must be less than 160% of the minimum load impedance.

$$RFPP \le 1.6 \cdot Z_{load}$$

(Equation 275)

Equation 89 is applicable only when the loop characteristic angle for the phase-to-phase faults is more than three times as large as the maximum expected load-impedance angle. More accurate calculations are necessary according to equation 90.

$$RFPP \le 1.6 \cdot Z_{load\,\min} \cdot \left[\cos\vartheta - \frac{R1}{X1} \cdot \sin\vartheta \right]$$

(Equation 276)

All this is applicable for all measuring zones when no Power swing detection function ZMRPSB (78) is activated in the IED. Use an additional safety margin of approximately 20% in cases when a ZMRPSB (78) function is activated in the IED, refer to the description of Power swing detection function ZMRPSB (78).

Load impedance limitation, with Phase selection with load encroachment, quadrilateral characteristic function activated

The parameters for shaping of the load encroachment characteristic are found in the description of Phase selection with load encroachment, quadrilateral characteristic function (FRPSPDIS ,21).

Setting of minimum operating currents

The operation of Distance protection zone, quadrilateral characteristic (ZMQPDIS, 21) can be blocked if the magnitude of the currents is below the set value of the parameter *IMinPUPP* and *IMinPUPG*.

The default setting of *IMinPUPP* and *IMinPUPG* is 20% of *IBase* where *IBase* is the chosen current for the analogue input channels. The value has been proven in practice to be suitable in most of the applications. However, there might be applications where it is necessary to increase the sensitivity by reducing the minimum operating current down to 10% of *IBase*. This happens especially in cases, when the IED serves as a remote back-up protection on series of very long transmission lines.

Setting *IMinOpIR* blocks the phase-to-ground loop if $3I_0$<*IMinOpIR*. The default setting of *IMinOpIR* is 5% of *IBase*.

The minimum operating fault current is automatically reduced to 75% of its set value, if the distance protection zone has been set for the operation in reverse direction.

Setting of timers for distance protection zones

The required time delays for different distance protection zones are independent of each other. Distance protection zone 1 can also have a time delay, if so required for selectivity reasons. Time delays for all zones can be set in a range of 0 to 60 seconds. The tripping function of each particular zone can be inhibited by setting the corresponding *Operation* parameter to *Off*. Different time delays are possible for the phase-to-ground*tPG* and for the phase-to-phase *tPP* measuring loops in each distance protection zone separately, to further increase the total flexibility of a distance protection.

3.6.9.3 Setting parameters

Table 75: ZMRPDIS (21) Group settings (basic)

Name	Values (Range)	Unit	Step	Default	Description
Operation	Disabled Enabled	-	-	Enabled	Operation Disable / Enable
IBase	1 - 99999	A	1	3000	Base current, i.e. rated current
VBase	0.05 - 2000.00	kV	0.05	400.00	Base voltage, i.e. rated voltage
OperationDir	Disabled Non-directional Forward Reverse	-	-	Forward	Operation mode of directionality NonDir / Forw / Rev

Table continues on next page

Name	Values (Range)	Unit	Step	Default	Description
X1PP	0.10 - 3000.00	ohm/p	0.01	30.00	Positive sequence reactance reach Ph-Ph
R1PP	0.01 - 1000.00	ohm/p	0.01	5.00	Positive seq. resistance for characteristic angle, Ph-Ph
RFPP	0.10 - 3000.00	ohm/l	0.01	30.00	Fault resistance reach in ohm/loop, Ph-Ph
X1PG	0.10 - 3000.00	ohm/p	0.01	30.00	Positive sequence reactance reach Ph-G
R1PG	0.01 - 1000.00	ohm/p	0.01	5.00	Positive seq. resistance for characteristic angle, Ph-G
X0PG	0.10 - 9000.00	ohm/p	0.01	100.00	Zero sequence reactance reach, Ph-G
R0PG	0.01 - 3000.00	ohm/p	0.01	15.00	Zero seq. resistance for zone characteristic angle, Ph-G
RFPG	0.10 - 9000.00	ohm/l	0.01	100.00	Fault resistance reach in ohm/loop, Ph-G
OperationPP	Disabled Enabled	-	-	Enabled	Operation mode Disable/Enable of Phase-Phase loops
Timer tPP	Disabled Enabled	-	-	Enabled	Operation mode Disable/Enable of Zone timer, Ph-Ph
tPP	0.000 - 60.000	s	0.001	0.000	Time delay of trip, Ph-Ph
OperationPG	Disabled Enabled	-	-	Enabled	Operation mode Disable/Enable of Phase-Ground loops
Timer tPG	Disabled Enabled	-	-	Enabled	Operation mode Disable/ Enable of Zone timer, Ph-G
tPG	0.000 - 60.000	s	0.001	0.000	Time delay of trip, Ph-G
IMinPUPP	10 - 1000	%IB	1	20	Minimum pickup delta current (2 x current of lagging phase) for Phase-to-phase loops
IMinPUPG	10 - 1000	%IB	1	20	Minimum pickup phase current for Phase-to-ground loops
IMinOpIR	5 - 1000	%IB	1	5	Minimum operate residual current for Phase-Ground loops

Table 76: ZMRAPDIS (21) Group settings (basic)

Name	Values (Range)	Unit	Step	Default	Description
Operation	Disabled Enabled	-	-	Enabled	Operation Disable / Enable
IBase	1 - 99999	A	1	3000	Base current, i.e. rated current
VBase	0.05 - 2000.00	kV	0.05	400.00	Base voltage, i.e. rated voltage
OperationDir	Disabled Non-directional Forward Reverse	-	-	Forward	Operation mode of directionality NonDir / Forw / Rev
X1PP	0.10 - 3000.00	ohm/p	0.01	30.00	Positive sequence reactance reach Ph-Ph
R1PP	0.01 - 1000.00	ohm/p	0.01	5.00	Positive seq. resistance for characteristic angle, Ph-Ph

Table continues on next page

Name	Values (Range)	Unit	Step	Default	Description
RFPP	0.10 - 3000.00	ohm/l	0.01	30.00	Fault resistance reach in ohm/loop, Ph-Ph
X1PG	0.10 - 3000.00	ohm/p	0.01	30.00	Positive sequence reactance reach Ph-G
R1PG	0.01 - 1000.00	ohm/p	0.01	5.00	Positive seq. resistance for characteristic angle, Ph-G
X0PG	0.10 - 9000.00	ohm/p	0.01	100.00	Zero sequence reactance reach, Ph-G
R0PG	0.01 - 3000.00	ohm/p	0.01	15.00	Zero seq. resistance for zone characteristic angle, Ph-G
RFPG	0.10 - 9000.00	ohm/l	0.01	100.00	Fault resistance reach in ohm/loop, Ph-G
OperationPP	Disabled Enabled	-	-	Enabled	Operation mode Disable/Enable of Phase-Phase loops
Timer tPP	Disabled Enabled	-	-	Enabled	Operation mode Disable/Enable of Zone timer, Ph-Ph
tPP	0.000 - 60.000	s	0.001	0.000	Time delay of trip, Ph-Ph
OperationPG	Disabled Enabled	-	-	Enabled	Operation mode Disable/Enable of Phase-Ground loops
Timer tPG	Disabled Enabled	-	-	Enabled	Operation mode Disable/ Enable of Zone timer, Ph-G
tPG	0.000 - 60.000	s	0.001	0.000	Time delay of trip, Ph-G
IMinPUPP	10 - 1000	%IB	1	20	Minimum pickup delta current (2 x current of lagging phase) for Phase-to-phase loops
IMinPUPG	10 - 1000	%IB	1	20	Minimum pickup phase current for Phase-to-ground loops

3.6.10 Phase selection, quadrilateral characteristic with settable angle FRPSPDIS (21)

Function description	IEC 61850 identification	IEC 60617 identification	ANSI/IEEE C37.2 device number
Phase selection, quadrilateral characteristic with settable angle	FRPSPDIS	*Z<phs*	21

3.6.10.1 Application

The operation of transmission networks today is in many cases close to the stability limit. The ability to accurately and reliably classify the different types of fault, so that single pole tripping and autoreclosing can be used plays an important role in this matter. Phase selection, quadrilateral characteristic with settable angle (FRPSPDIS, 21) is designed to accurately select the proper fault loop in the distance measuring function depending on the fault type.

The heavy load transfer that is common in many transmission networks may in some cases be in opposite to the wanted fault resistance coverage. Therefore, the function has a built in algorithm for load encroachment, which gives the possibility to enlarge the resistive setting of both the Phase selection with load encroachment and the measuring zones without interfering with the load.

A current-based phase selection is also included. The measuring elements continuously measure three phase currents and the residual current and, compare them with the set values.

The extensive output signals from FRPSPDIS (21) give also important information about faulty phase(s), which can be used for fault analysis.

Load encroachment

Each of the six measuring loops has its own load (encroachment) characteristic based on the corresponding loop impedance. The load encroachment functionality is always active, but can be switched off by selecting a high setting.

The outline of the characteristic is presented in figure 158. As illustrated, the resistive blinders are set individually in forward and reverse direction while the angle of the sector is the same in all four quadrants.

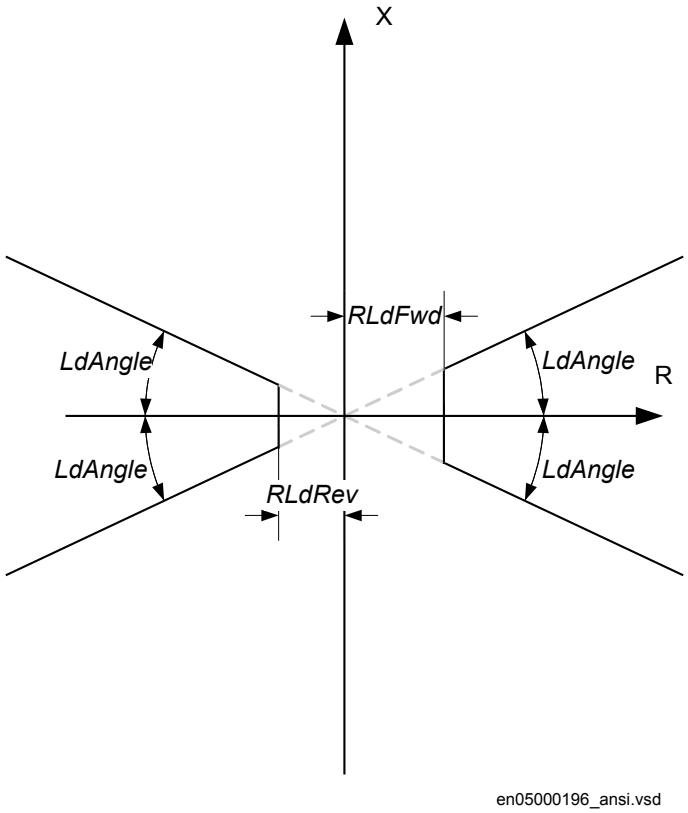

Figure 158: Characteristic of load encroachment function

The influence of load encroachment function on the operation characteristic is dependent on the chosen operation mode of the FRPSPDIS (21) function. When output signal PHSELZis selected, the characteristic for the FRPSPDIS (21) (and also zone measurement depending on settings) can be reduced by the load encroachment characteristic (as shown in figure 159).

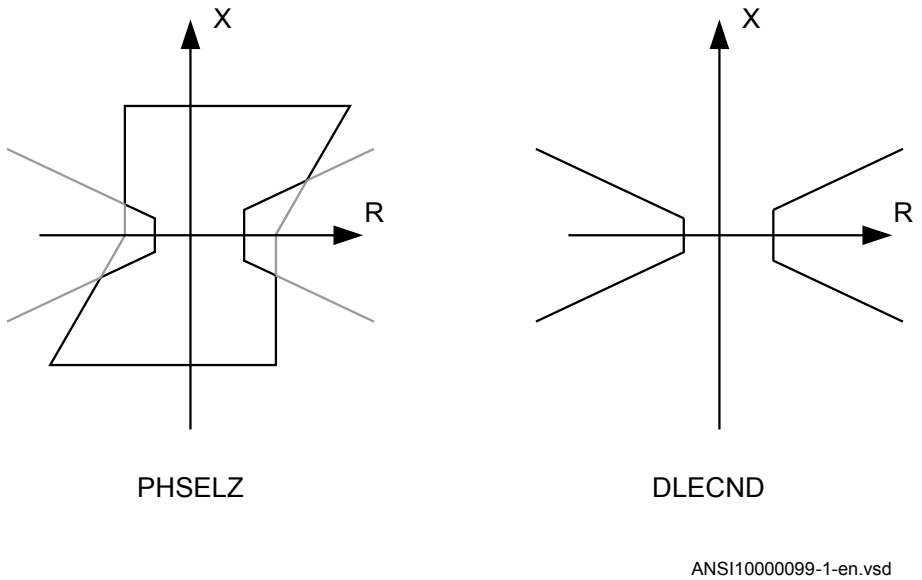

Figure 159: Operating characteristic when load encroachment is activated

When the "phase selection" is set to operate together with a distance measuring zone the resultant operate characteristic could look something like in figure 160. The figure shows a distance measuring zone operating in forward direction. Thus, the operating area of the zone together with the load encroachment area is highlighted in black.

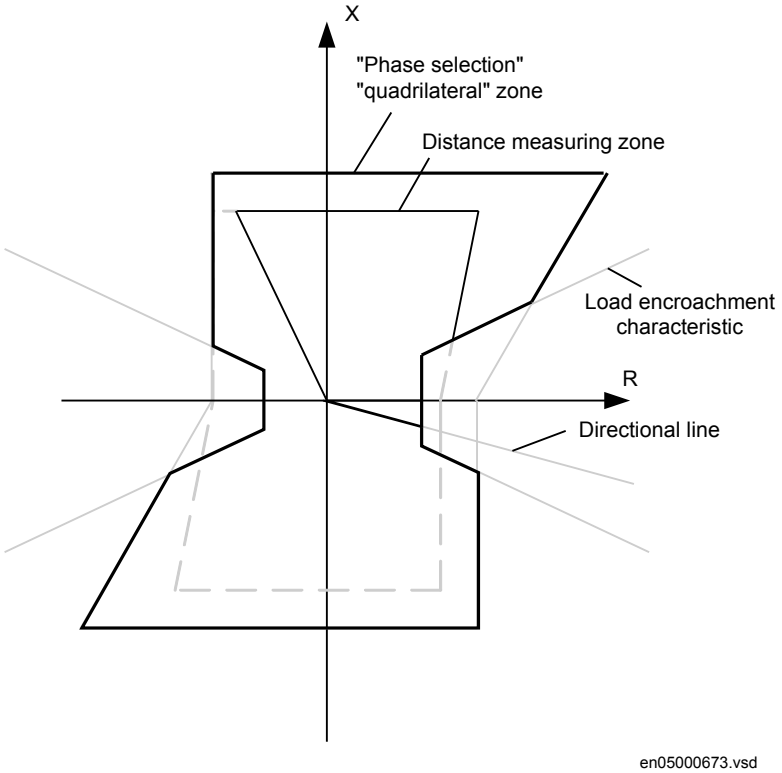

Figure 160: Operation characteristic in forward direction when load encroachment is enabled

Figure 160 is valid for phase-to-ground. During a three-phase fault, or load, when the "quadrilateral" phase-to-phase characteristic is subject to enlargement and rotation the operate area is transformed according to figure 161. Notice in particular what happens with the resistive blinders of the "phase selection" "quadrilateral" zone. Due to the 30-degree rotation, the angle of the blinder in quadrant one is now 100 degrees instead of the original 70 degrees. The blinder that is nominally located to quadrant four will at the same time tilt outwards and increase the resistive reach around the R-axis. Consequently, it will be more or less necessary to use the load encroachment characteristic in order to secure a margin to the load impedance.

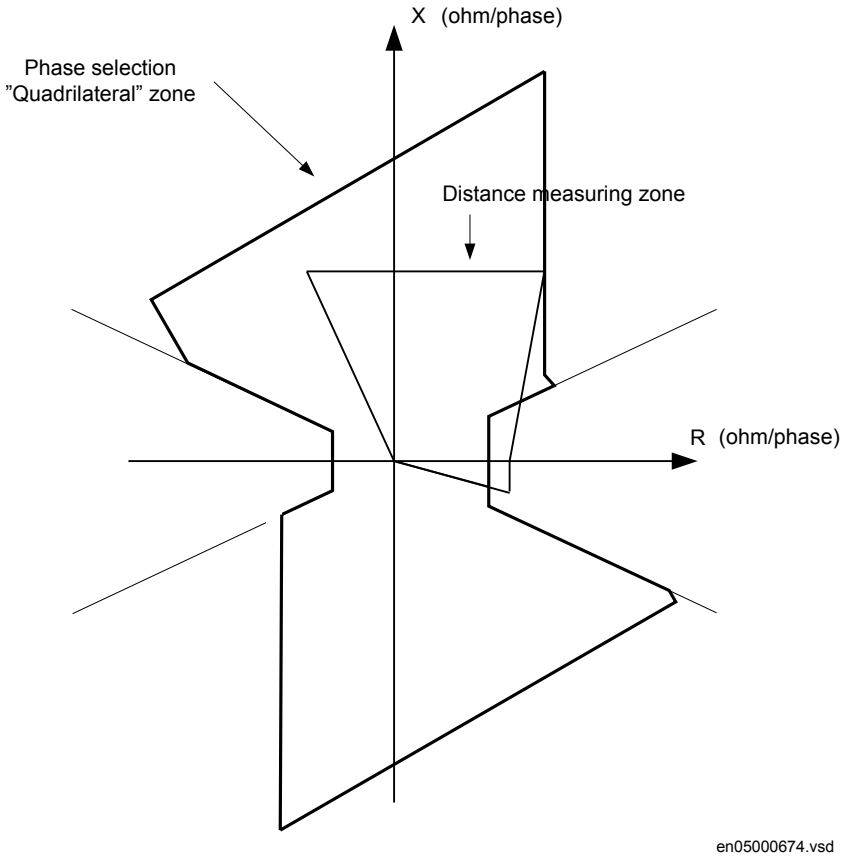

Figure 161: Operation characteristic for FRPSPDIS (21) in forward direction for three-phase fault, ohm/phase domain

The result from rotation of the load characteristic at a fault between two phases is presented in fig 162. Since the load characteristic is based on the same measurement as the quadrilateral characteristic, it will rotate with the quadrilateral characteristic clockwise by 30 degrees when subject to a pure phase-to-phase fault. At the same time, the characteristic "shrinks" by 2/√3, from the full RLdFw/RLdRv reach, which is valid at load or three-phase fault.

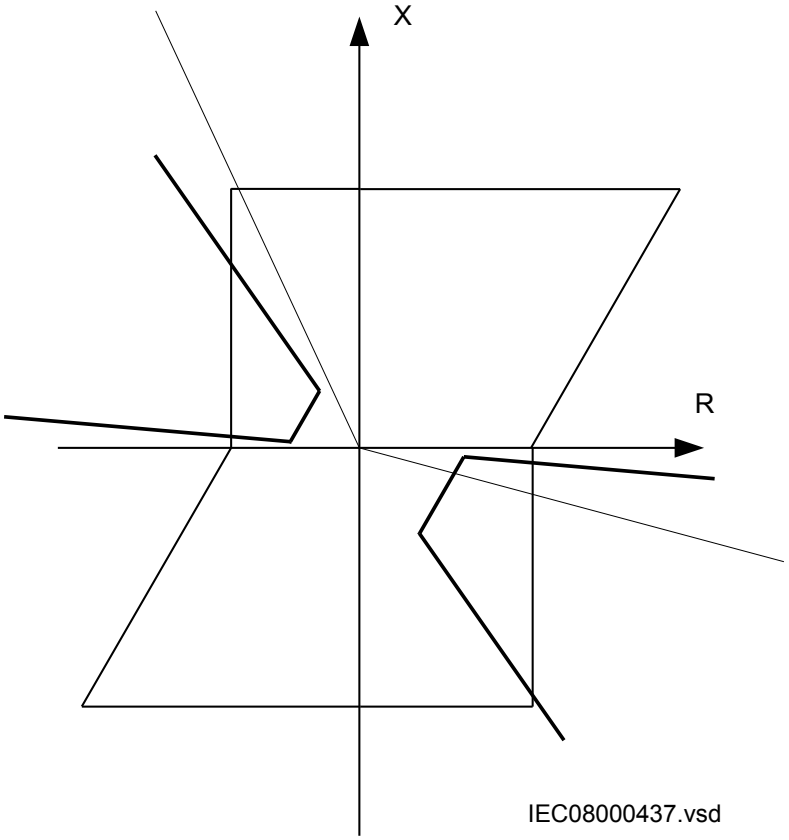

Figure 162: Rotation of load characteristic for a fault between two phases

This rotation may seem a bit awkward, but there is a gain in selectivity by using the same measurement as for the quadrilateral characteristic since not all phase-to-phase loops will be fully affected by a fault between two phases. It should also provide better fault resistive coverage in quadrant 1. The relative loss of fault resistive coverage in quadrant 4 should not be a problem even for applications on series compensated lines.

3.6.10.2 Load encroachment characteristics

The phase selector must at least cover the overreaching zone 2 in order to achieve correct phase selection for utilizing single-phase autoreclosing for faults on the entire line. It is not necessary to cover all distance protection zones. A safety margin of at least 10% is recommended. In order to get operation from distance zones, the phase selection output PHSELZ or PHSELI must be connected to input PHSEL on distance zones.

For normal overhead lines, the angle for the loop impedance φ for phase-to-ground fault defined according to equation 165.

$$\arctan \varphi = \frac{X1_L + XN}{R1_L + RN}$$

(Equation 277)

But in some applications, for instance cable lines, the angle of the loop might be less than the set angle. In these applications, the settings of fault resistance coverage in forward and reverse direction, *RFltFwdPG* and *RFltRevPG* for phase-to-ground faults and *RFltRevPP* and *RFltRevPP* for phase-to-phase faults have to be increased to avoid that the phase selection characteristic must cut off some part of the zone characteristic. The necessary increased setting of the fault resistance coverage can be derived from trigonometric evaluation of the basic characteristic for respectively fault type.

The following setting guideline considers normal overhead lines applications and provides two different setting alternatives:

A)	A recommended characteristic angle of 60 degrees for the phase selection
B)	A characteristic angle of 90 and 70 degrees for phase-to-ground and phase-to-phase respectively, like implemented in the REL500 series

The following figures illustrate alternative B).

Phase-to-ground fault in forward direction

With reference to figure 163, the following equations for the setting calculations can be obtained.

Index PHS in images and equations reference settings for Phase selection with load encroachment function (FRPSPDIS, 21) and index Zm reference settings for Distance protection function (ZMRPDIS).

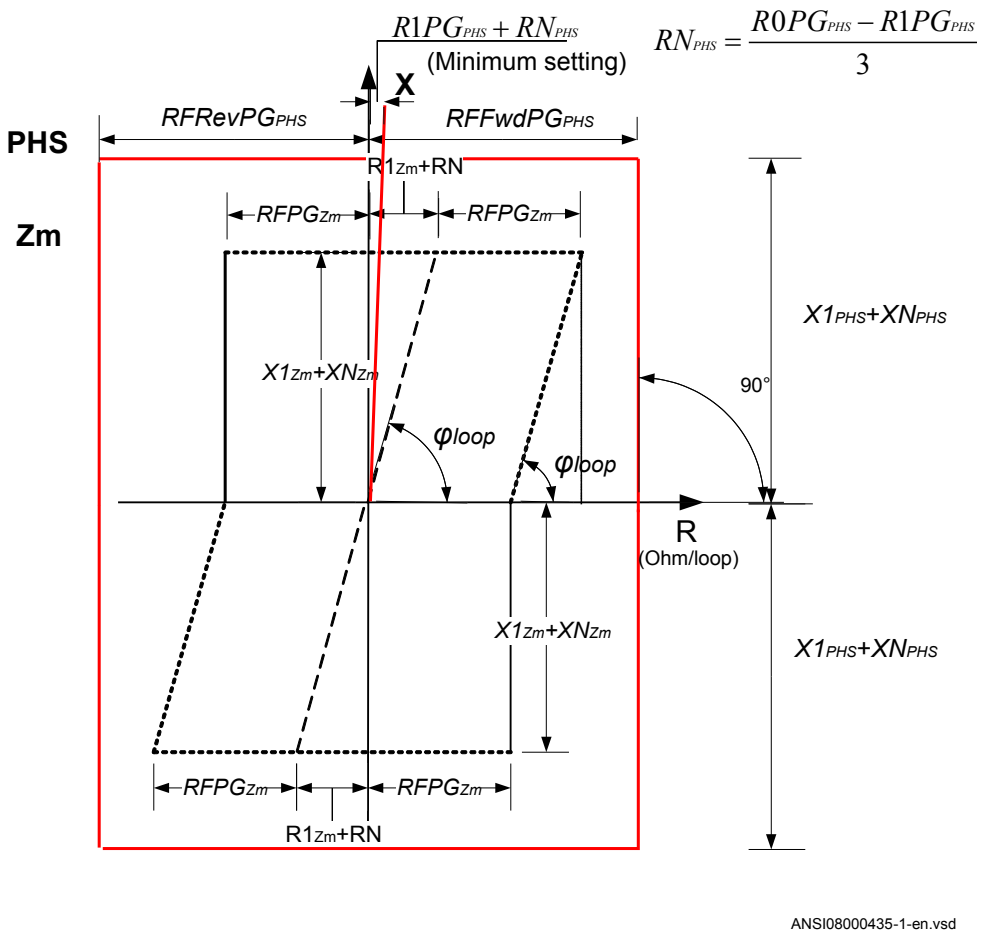

Figure 163: Relation between measuring zone and FRPSPDIS (21) characteristic

Reactive reach

The reactive reach in forward direction must as minimum be set to cover the measuring zone used in the Teleprotection schemes, mostly zone 2. Equation 166 and equation 167 gives the minimum recommended reactive reach.

These recommendations are valid for both 60 and 90 deg. characteristic angle.

$$X1_{PHS} \geq 1.44 \cdot X1_{Zm}$$

(Equation 278)

$$X0_{PHS} \geq 1.44 \cdot X0_{Zm}$$

(Equation 279)

where:

$X1_{Zm}$	is the reactive reach for the zone to be covered by FRPSPDIS (21), and the constant
1.44	is a safety margin
$X0_{Zm}$	is the zero-sequence reactive reach for the zone to be covered by FRPSPDIS (21)

The reactive reach in reverse direction is automatically set to the same reach as for forward direction. No additional setting is required.

Fault resistance reach

The resistive reach must cover *RFPG* for the overreaching zone to be covered, mostly zone 2. Consider the longest overreaching zone if correct fault selection is important in the application. Equation 280 and 281 gives the minimum recommended resistive reach.

A) 60 degrees

$$RFFwPG \geq 1.1 \cdot RFPGZm$$

(Equation 280)

B) 90 degrees

$$RFFwPG > \frac{1}{3} \cdot \left(2 \cdot R1PGZm + R0PGZm\right) + RFPGZm$$

(Equation 281)

The security margin has to be increased in the case where φloop<60° to avoid that FRPSPDIS (21) characteristic cuts off some part of the zone measurement characteristic.

RFFwPP and *RFFRvPP* must be set in a way that the loop characteristic angle can be 60 degrees (or alternatively the same or lower compared to the measuring zone that must be covered). If the characteristic angle for IEDs in the 500 series of 90 degrees is desired, *RFFwPP* and *RFFRvPP* must be set to minimum setting values.

Phase-to-ground fault in reverse direction

Reactive reach

The reactive reach in reverse direction is the same as for forward so no additional setting is required.

Resistive reach

The resistive reach in reverse direction must be set longer than the longest reverse zones. In blocking schemes it must be set longer than the overreaching zone at remote end that is used in the communication scheme. In equation 169 the index ZmRv references the specific zone to be coordinated to.

$$\mathrm{RFltREvPG} \geq 1.2 \cdot \mathrm{RFPG}_{\mathrm{ZmRv}}$$

(Equation 282)

Phase-to-phase fault in forward direction

Reactive reach

The reach in reactive direction is determined by phase-to-ground reach setting *X1*. No extra setting is required.

Resistive reach

R1PE and *R0PE* must be set in a way that the loop characteristic angle can be 60 deg (this gives a characteristic angle of 90 deg. at three-phase faults). If the 500-series characteristic angle of 70 deg. is desired, *R1PE* and *R0PE* must be set accordingly.

Fault resistance reach

The fault resistance reaches in forward direction *RFItFwdPP*, must cover $RFPP_{Zm}$ with at least 25% margin. $RFPP_{Zm}$ is the setting of fault resistance for phase-to-phase fault for the longest overreaching zone to be covered by FRPSPDIS (21), as shown in figure 117. The minimum recommended reach can be calculated according to equation 283 and 284.

Index PHS in images and equations reference settings for Phase selection, quadrilateral characteristic with settable angle function FRPSPDIS (21)and index Zm reference settings for Distance protection function ZMRPDIS.

A) 60°

$$RFltFwdPP \geq 1.25 \cdot RFPP_{Zm}$$

(Equation 283)

B) 70°

$$RFFwdPP > 1.82 \cdot R1PP_{Zm} + 0.32 \cdot X1PP_{Zm} + 0.91 \cdot RFPP_{Zm}$$

(Equation 284)

where:

$RFPP_{Zm}$ is the setting of the longest reach of the overreaching zones that must be covered by FRPSPDIS (21).

Equation 283 and 284 are is also valid for three-phase fault. The proposed margin of 25% will cater for the risk of cut off of the zone measuring characteristic that might occur at three-phase fault when FRPSPDIS (21)characteristic angle is changed from 60 degrees to 90 degrees or from 70 degrees to 100 degrees (rotated 30° anti-clock wise).

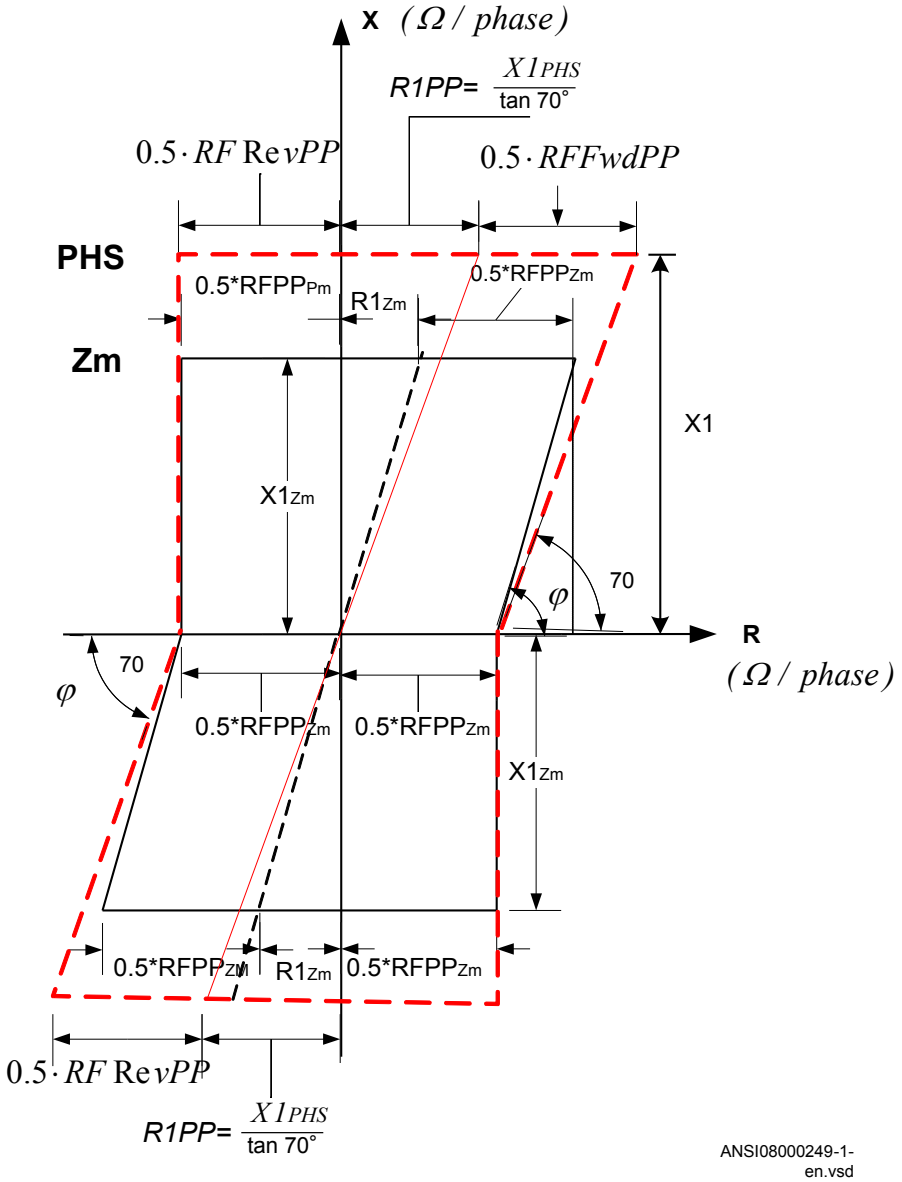

Figure 164: Relation between measuring zone and FRPSPDIS (21) characteristic for phase-to-phase fault for φline>70° (setting parameters in italic)

3.6.10.3 Setting guidelines

The following setting guideline consider normal overhead lines applications where φloop and φline is greater than 60°.

Resistive reach with load encroachment characteristic

The procedure for calculating the settings for the load encroachment consist basically to define the load angle *LdAngle*, the blinder *RLdFwd* in forward direction and blinder *RLdRev* in reverse direction, as shown in figure 118.

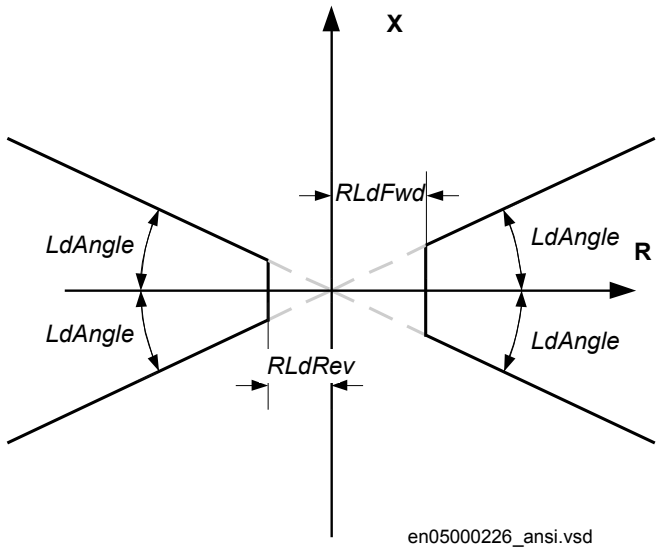

Figure 165: Load encroachment characteristic

The load angle *LdAngle* is the same in forward and reverse direction, so it could be suitable to begin to calculate the setting for that parameter. Set the parameter to the maximum possible load angle at maximum active load. A value bigger than 20° must be used.

The blinder in forward direction, *RLdFwd*, can be calculated according to equation 171.

$$RLdFwd = 0.8 \cdot \frac{V^2 \min}{P \exp \max}$$

where:

*P*exp max	is the maximum exporting active power
*V*min	is the minimum voltage for which the Pexp max occurs
0.8	is a security factor to ensure that the setting of *RLdFwd* can be lesser than the calculated minimal resistive load.

The resistive boundary *RLdRev* for load encroachment characteristic in reverse direction can be calculated in the same way as *RLdFwd*, but use maximum importing

power that might occur instead of maximum exporting power and the relevant Vmin voltage for this condition.

Minimum operate currents

FRPSPDIS (21) has two current setting parameters, which blocks the respective phase-to-ground loop and phase-to-phase loop if the RMS value of the phase current (ILn) and phase difference current (ILmILn) is below the settable threshold.

The threshold to activate the phase selector for phase-to-ground (*IMinPUPG*) is set to the default value or a level to securely detect a single line-to-ground fault at the furthest reach of the phase selection. It is recommended to set *IMinPUPP* to double value of *IMinPUPG*.

The threshold for opening the measuring loop for phase-to-ground fault (*3I0Enable_PG*) is set securely detect single line-to-ground fault at remote end on the protected line. It is recommended to set *INBlockPP* to double value of *3I0Enable_PG*.

3.6.10.4 Setting parameters

Table 77: FRPSPDIS (21) Group settings (basic)

Name	Values (Range)	Unit	Step	Default	Description
IBase	1 - 99999	A	1	3000	Base current, i.e. rated current
VBase	0.05 - 2000.00	kV	0.01	400.00	Base voltage, i.e. rated voltage
3I0BLK_PP	10 - 100	%IPh	1	40	3I0 limit for disabling phase-to-phase measuring loops
3I0Enable_PG	10 - 100	%IPh	1	20	3I0 pickup for releasing phase-to-ground measuring loops
RLdFwd	1.00 - 3000.00	ohm/p	0.01	80.00	Forward resistive reach for the load impedance area
RldRev	1.00 - 3000.00	ohm/p	0.01	80.00	Reverse resistive reach for the load impedance area
LdAngle	5 - 70	Deg	1	30	Load angle determining the load impedance area
X1	0.50 - 3000.00	ohm/p	0.01	40.00	Positive sequence reactance reach
R1PP	0.10 - 1000.00	ohm/p	0.01	15.00	Positive seq. resistance for characteristic angle, Ph-Ph
X1FwPG	0.10 - 1000.00	ohm/p	0.01	1.50	Positive seq. resistance for characteristic angle, Ph-G
X0	0.50 - 9000.00	ohm/p	0.01	120.00	Zero sequence reactance reach
R0PG	0.50 - 3000.00	ohm/p	0.01	5.00	Zero seq. resistance for zone characteristic angle, Ph-G
RFltFwdPP	0.50 - 3000.00	ohm/l	0.01	30.00	Fault resistance reach, Ph-Ph, forward
RFltRevPP	0.50 - 3000.00	ohm/l	0.01	30.00	Fault resistance reach, Ph-Ph, reverse
RFltFwdPG	1.00 - 9000.00	ohm/l	0.01	100.00	Fault resistance reach, Ph-G, forward

Table continues on next page

Name	Values (Range)	Unit	Step	Default	Description
RFltRevPG	1.00 - 9000.00	ohm/l	0.01	100.00	Fault resistance reach, Ph-G, reverse
IMinPUPP	5 - 500	%IB	1	10	Minimum pickup delta current (2 x current of lagging phase) for Phase-to-phase loops
IMinPUPG	5 - 500	%IB	1	5	Minimum pickup phase current for Phase-to-ground loops

Table 78: FRPSPDIS (21) Group settings (advanced)

Name	Values (Range)	Unit	Step	Default	Description
TimerPP	Disabled Enabled	-	-	Disabled	Operation mode Disable/Enable of Zone timer, Ph-Ph
tPP	0.000 - 60.000	s	0.001	3.000	Time delay to trip, Ph-Ph
TimerPE	Disabled Enabled	-	-	Disabled	Operation mode Disable/ Enable of Zone timer, Ph-G
tPG	0.000 - 60.000	s	0.001	3.000	Time delay to trip, Ph-E

3.6.11 Power swing detection ZMRPSB (68)

Function description	IEC 61850 identification	IEC 60617 identification	ANSI/IEEE C37.2 device number
Power swing detection	ZMRPSB	*Zpsb*	68

3.6.11.1 Application

General

Various changes in power system may cause oscillations of rotating units. The most typical reasons for these oscillations are big changes in load or changes in power system configuration caused by different faults and their clearance. As the rotating masses strive to find a stable operate condition, they oscillate with damped oscillations until they reach the final stability.

The extent of the oscillations depends on the extent of the disturbances and on the natural stability of the system.

The oscillation rate depends also on the inertia of the system and on the total system impedance between different generating units. These oscillations cause changes in phase and amplitude of the voltage difference between the oscillating generating units

in the power system, which reflects further on in oscillating power flow between two parts of the system - the power swings from one part to another - and vice versa.

Distance IEDs located in interconnected networks see these power swings as the swinging of the measured impedance in relay points. The measured impedance varies with time along a locus in an impedance plane, see figure 166. This locus can enter the operating characteristic of a distance protection and cause, if no preventive measures have been considered, its unwanted operation.

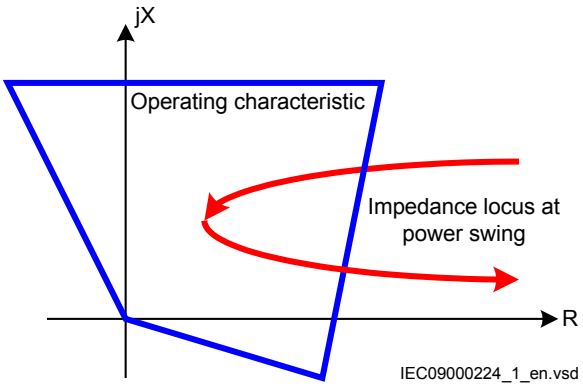

Figure 166: Impedance plane with Power swing detection operating characteristic and impedance locus at power swing

Basic characteristics

Power swing detection function (ZMRPSB, 78) detects reliably power swings with periodic time of swinging as low as 200 ms (which means slip frequency as high as 10% of the rated frequency on the 50 Hz basis). It detects the swings under normal system operate conditions as well as during dead time of a single-pole automatic reclosing cycle.

ZMRPSB (78) function is able to secure selective operation for internal faults during power. The operation of the distance protection function remains stable for external faults during the power swing condition, even with the swing (electrical) centre located on the protected power line.

The operating characteristic of the ZMRPSB (78) function is easily adjustable to the selected impedance operating characteristics of the corresponding controlled distance protection zones as well as to the maximum possible load conditions of the protected power lines. See the corresponding description in *"Technical reference manual"* for the IEDs.

3.6.11.2 Setting guidelines

Setting guidelines are prepared in the form of a setting example for the protected power line as part of a two-machine system presented in figure 167.

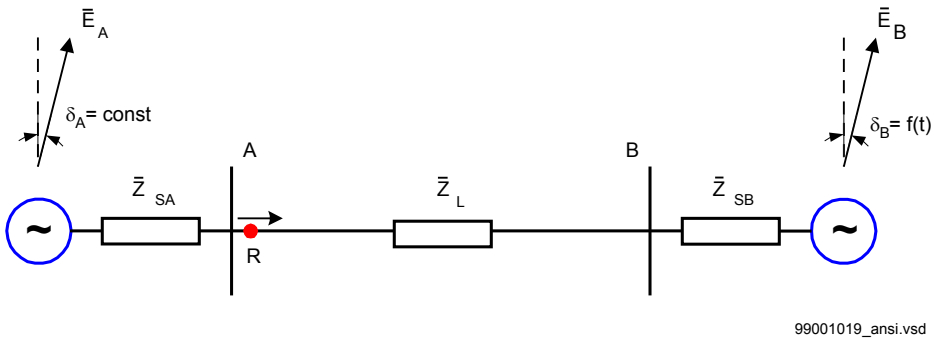

Figure 167: Protected power line as part of a two-machine system

Reduce the power system with protected power line into equivalent two-machine system with positive sequence source impedances Z_{SA} behind the IED and Z_{SB} behind the remote end bus B. Observe a fact that these impedances can not be directly calculated from the maximum three-phase short circuit currents for faults on the corresponding busbar. It is necessary to consider separate contributions of different connected circuits.

The required data is as follows:

$V_r = 400kV$	Rated system voltage
$V_{min} = 380kV$	Minimum expected system voltage under critical system conditions
$f_n = 60Hz$	Rated system frequency
$V_p = \frac{400}{\sqrt{3}} kV$	Rated primary voltage of voltage protection transformers used
$V_s = \frac{0.115}{\sqrt{3}} kV$	Rated secondary voltage of voltage instrument transformers used

Table continues on next page

$I_p = 1200 A$	Rated primary current of current protection transformers used
$I_s = 5 A$	Rated secondary current of current protection transformers used
$\bar{Z}_{L1} = (10.71 + j75.6)\Omega$	Line positive sequence impedance
$\bar{Z}_{SA1} = (1.15 + j43.5)\Omega$	Positive sequence source impedance behind A bus
$\bar{Z}_{SB1} = (5.3 + j35.7)\Omega$	Positive sequence source impedance behind B bus
$S_{\max} = 1000 MVA$	Maximum expected load in direction from A to B (with minimum system operating voltage V_{min})
$\cos(\varphi_{\max}) = 0.95$	Power factor at maximum line loading
$\varphi_{\max} = 25°$	Maximum expected load angle
$f_{si} = 2.5 Hz$	Maximum possible initial frequency of power oscillation
$f_{sc} = 7.0 Hz$	Maximum possible consecutive frequency of power oscillation

The impedance transformation factor, which transforms the primary impedances to the corresponding secondary values is calculated according to equation 287. Consider a fact that all settings are performed in primary values. The impedance transformation factor is presented for orientation and testing purposes only.

$$KIMP = \frac{I_p}{I_s} \cdot \frac{V_s}{V_p} = \frac{1200}{5} \cdot \frac{0.115}{400} = 0.069$$

(Equation 287)

The minimum load impedance at minimum expected system voltage is equal to equation 288.

$$\left|\overline{Z}_{L\min}\right| = \frac{V^{2}{}_{\min}}{S_{\max}} = \frac{380^{2}}{1000} = 144.4\Omega$$

(Equation 288)

The minimum load resistance R_{Lmin} at maximum load and minimum system voltage is equal to equation 289.

$$R_{L\min} = \left|\overline{Z}_{L\min}\right| \cdot \cos\left(\varphi_{\max}\right) = 144.4 \cdot 0.95 = 137.2\Omega$$

(Equation 289)

The system impedance Z_S is determined as a sum of all impedance in an equivalent two-machine system, see figure 167. Its value is calculated according to equation 290.

$$\overline{Z}_S = \overline{Z}_{SA1} + \overline{Z}_{L1} + \overline{Z}_{SB1} = \left(17.16 + j154.8\right)\Omega$$

(Equation 290)

The calculated value of the system impedance is of informative nature and helps determining the position of oscillation center, see figure 168, which is for general case calculated according to equation 291.

$$\overline{Z}_{CO} = \frac{\overline{Z}_S}{1 + \frac{\left|\overline{E}_B\right|}{\left|\overline{E}_A\right|}} - \overline{Z}_{SA1}$$

(Equation 291)

In particular cases, when

$$\left|\overline{E}_A\right| = \left|\overline{E}_B\right|$$

(Equation 292)

resides the center of oscillation on impedance point, see equation 293.

$$\overline{Z}_{CO} = \frac{\overline{Z}_S}{2} - \overline{Z}_{SA1} = \left(7.43 + j33.9\right)\Omega$$

(Equation 293)

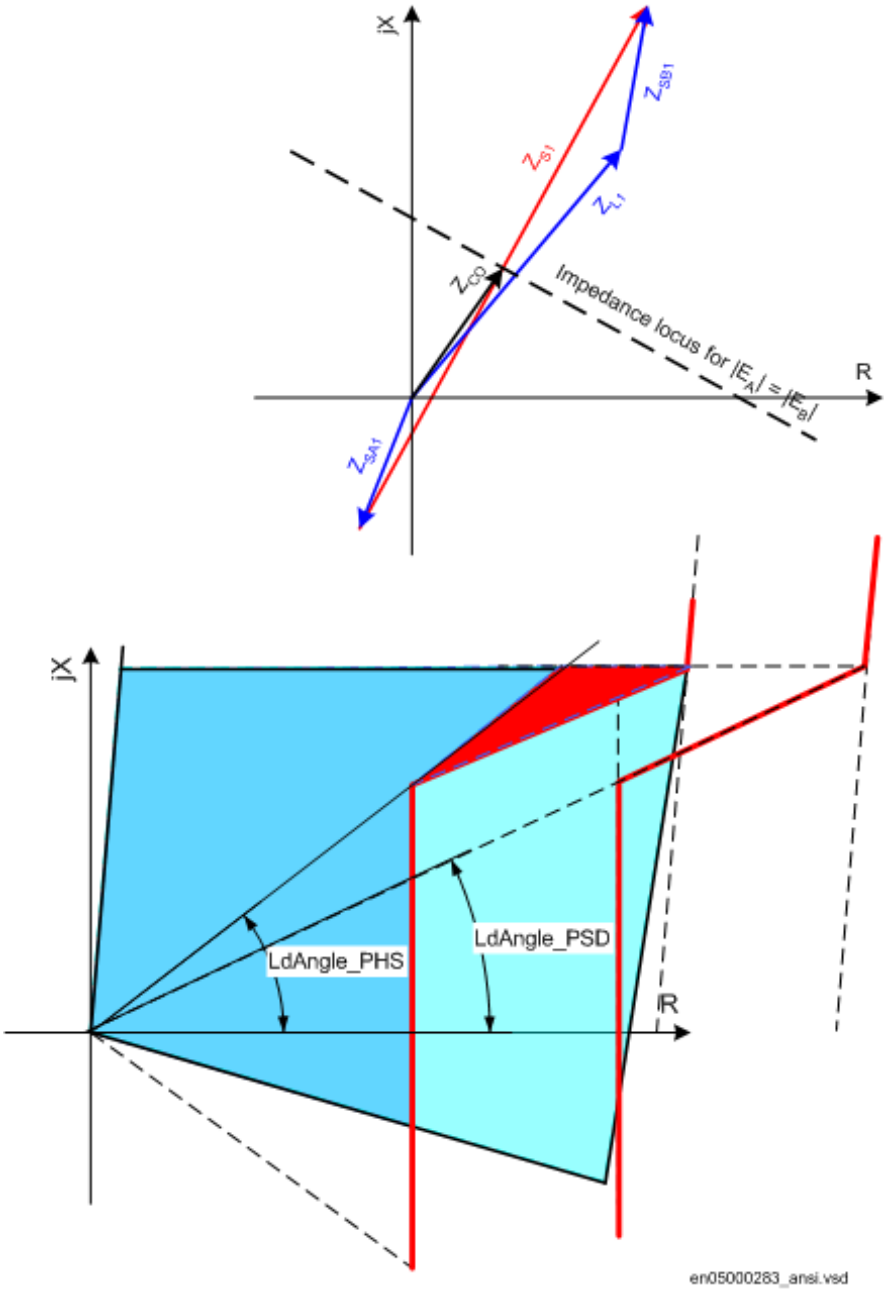

Figure 168: Impedance diagrams with corresponding impedances under consideration

The outer boundary of oscillation detection characteristic in forward direction *RLdOutFw* should be set with certain safety margin K_L compared to the minimum expected load resistance R_{Lmin}. When the exact value of the minimum load resistance

is not known, the following approximations may be considered for lines with rated voltage 400 kV:

- K_L = 0.9 for lines longer than 100 miles
- K_L = 0.85 for lines between 50 and 100 miles
- K_L = 0.8 for lines shorter than 50 miles

Multiply the required resistance for the same safety factor K_L with the ratio between actual voltage and 400kV when the rated voltage of the line under consideration is higher than 400kV. The outer boundary *RLdOutFw* obtains in this particular case its value according to equation 294.

$$RLdOutFw = K_L \cdot R_{L\min} = 0.9 \cdot 137.2 = 123.5\Omega$$

(Equation 294)

It is a general recommendation to set the inner boundary *RLdInFw* of the oscillation detection characteristic to 80% or less of its outer boundary. Exceptions are always possible, but must be considered with special care especially when it comes to settings of timers *tP1* and *tP2* included in oscillation detection logic. This requires the maximum permitted setting values of factor *kLdRFw* = 0.8. Equation 295 presents the corresponding maximum possible value of *RLdInFw*.

$$\mathrm{RLdInFw} = kLdRFw \cdot RLdOutFw = 98.8\Omega$$

(Equation 295)

The load angles, which correspond to external δ_{Out} and internal δ_{In} boundary of proposed oscillation detection characteristic in forward direction, are calculated with sufficient accuracy according to equation 296 and 297 respectively.

$$\delta_{Out} = 2 \cdot \arctan\left(\frac{\left|\bar{Z}_S\right|}{2 \cdot RLdOutFw}\right) = 2 \cdot \arctan\left(\frac{155.75}{2 \cdot 123.5}\right) = 64.5°$$

(Equation 296)

$$\delta_{In} = 2 \cdot \arctan\left(\frac{\left|\bar{Z}_S\right|}{2 \cdot RLdInFw_{\max}}\right) = 2 \cdot \arctan\left(\frac{155.75}{2 \cdot 98.8}\right) = 76.5°$$

(Equation 297)

The required setting *tP1* of the initial oscillation detection timer depends on the load angle difference according to equation 298.

$$tP1 = \frac{\delta_{In} - \delta_{Out}}{f_{si} \cdot 360°} = \frac{76.5° - 64.5°}{2.5 \cdot 360°} = 13.3ms$$

(Equation 298)

The general tendency should be to set the *tP1* time to at least 30 ms, if possible. Since it is not possible to further increase the external load angle δ_{Out}, it is necessary to reduce the inner boundary of the oscillation detection characteristic. The minimum required value is calculated according to the procedure listed in equation 299, 300, 301 and 302.

$$tP1_{\min} = 30ms$$

(Equation 299)

$$\delta_{In-\min} = 360° \cdot f_{si} \cdot tP1_{\min} + \delta_{Out} = 360° \cdot 2.5 \cdot 0.030 + 64.5° = 91.5°$$

(Equation 300)

$$RLdInFw_{\max 1} = \frac{\left|\bar{Z}_S\right|}{2 \cdot \tan\left(\frac{\delta_{in-\min}}{2}\right)} = \frac{155.75}{2 \cdot \tan\left(\frac{91.5}{2}\right)} = 75.8\Omega$$

(Equation 301)

$$kLdRFw = \frac{RLdInFw_{\max 1}}{RLdOutFw} = \frac{75.8}{123.5} = 0.61$$

(Equation 302)

Also check if this minimum setting satisfies the required speed for detection of consecutive oscillations. This requirement will be satisfied if the proposed setting of *tP2* time remains higher than 10 ms, see equation 303.

$$tP2_{\max} = \frac{\delta_{In} - \delta_{Out}}{f_{sc} \cdot 360°} = \frac{91.5° - 64.5°}{7 \cdot 360°} = 10.7ms$$

(Equation 303)

The final proposed settings are as follows:

RLdOutFw = 123.5Ω

kLdRFw = 0.61

tP1 = 30 ms

tP2 = 10 ms

Consider RLdInFw = 75.0Ω.

Do not forget to adjust the setting of load encroachment resistance *RLdFwd* in Phase selection with load encroachment (FDPSPDIS, 21 or FRPSPDIS, 21) to the value equal to or less than the calculated value RLdInFw. It is at the same time necessary to adjust the load angle in FDPSPDIS (21) or FRPSPDIS (21) to follow the condition presented in equation 304.

Index PHS designates correspondence to FDPSPDIS (21) or FRPSPDIS (21) function and index PSD the correspondence to ZMRPSB (68) function.

$$LdAngle_{PHS} \geq \arctan\left[\frac{\tan(LdAngle_{PSD})}{KLdRFw}\right]$$

(Equation 304)

Consider equation 305,

$$LdAngle_{PSD} = \varphi_{\max} = 25°$$

(Equation 305)

then it is necessary to set the load angle in FDPSPDIS (21) or FRPSPDIS (21) function to not less than equation 306.

$$\mathrm{LdAngle}_{\mathrm{PHS}} \geq \arctan\left[\frac{\tan(\mathrm{LdAngle}_{\mathrm{PSD}})}{\mathrm{kLdRFw}}\right] = \arctan\left[\frac{\tan(25°)}{0.61}\right] = 37.5°$$

(Equation 306)

It is recommended to set the corresponding resistive reach parameters in reverse direction (*RLdOutRv* and *kLdRRv*) to the same values as in forward direction, unless the system operating conditions, which dictate motoring and generating types of oscillations, requires different values. This decision must be made on basis of possible system contingency studies especially in cases, when the direction of transmitted power may change fast in short periods of time. It is recommended to use different setting groups for operating conditions, which are changing only between different periods of year (summer, winter).

System studies should determine the settings for the hold timer *tH*. The purpose of this timer is, to secure continuous output signal from Power swing detection function (ZMRPSB, 68) during the power swing, even after the transient impedance leaves ZMRPSB (68) operating characteristic and is expected to return within a certain time due to continuous swinging. Consider the minimum possible speed of power swinging in a particular system.

The *tR1* inhibit timer delays the influence of the detected residual current on the inhibit criteria for ZMRPSB(68). It prevents operation of the function for short transients in the residual current measured by the IED.

The *tR2* inhibit timer disables the output PICKUP signal from ZMRPSB (68) function, if the measured impedance remains within ZMRPSB (68) operating area for a time longer than the set *tR2* value. This time delay was usually set to approximately two seconds in older power-swing devices.

The setting of the *tGF* timer must cover, with sufficient margin, the opening time of a circuit breaker and the dead-time of a single-phase autoreclosing together with the breaker closing time.

3.6.11.3 Setting parameters

Table 79: ZMRPSB (68) Group settings (basic)

Name	Values (Range)	Unit	Step	Default	Description
Operation	Disabled Enabled	-	-	Disabled	Disbled/Enabled operation
X1InFw	0.10 - 3000.00	ohm	0.01	30.00	Inner reactive boundary, forward
R1LIn	0.10 - 1000.00	ohm	0.01	30.00	Line resistance for inner characteristic angle
R1FInFw	0.10 - 1000.00	ohm	0.01	30.00	Fault resistance coverage to inner resistive line, forward
X1InRv	0.10 - 3000.00	ohm	0.01	30.00	Inner reactive boundary, reverse
R1FInRv	0.10 - 1000.00	ohm	0.01	30.00	Fault resistance line to inner resistive boundary, reverse
OperationLdCh	Disabled Enabled	-	-	Enabled	Operation of load discrimination characteristic
RLdOutFw	0.10 - 3000.00	ohm	0.01	30.00	Outer resistive load boundary, forward
LdAngle	5 - 70	Deg	1	25	Load angle determining load impedance area
RLdOutRv	0.10 - 3000.00	ohm	0.01	30.00	Outer resistive load boundary, reverse
kLdRFw	0.50 - 0.90	Mult	0.01	0.75	Multiplication factor for inner resistive load boundary, forward
kLdRRv	0.50 - 0.90	Mult	0.01	0.75	Multiplication factor for inner resistive load boundary, reverse

Table continues on next page

Name	Values (Range)	Unit	Step	Default	Description
tGF	0.000 - 60.000	s	0.001	3.000	Timer for overcoming single-pole reclosing dead time
IMinPUPG	5 - 30	%IB	1	10	Minimum operate current in % of IBase
IBase	1 - 99999	A	1	3000	Base setting for current level settings

Table 80: ZMRPSB (68) Group settings (advanced)

Name	Values (Range)	Unit	Step	Default	Description
tP1	0.000 - 60.000	s	0.001	0.045	Timer for detection of initial power swing
tP2	0.000 - 60.000	s	0.001	0.015	Timer for detection of subsequent power swings
tW	0.000 - 60.000	s	0.001	0.250	Waiting timer for activation of tP2 timer
tH	0.000 - 60.000	s	0.001	0.500	Timer for holding power swing PICKUP output
tR1	0.000 - 60.000	s	0.001	0.300	Timer giving delay to inhibit by the residual current
tR2	0.000 - 60.000	s	0.001	2.000	Timer giving delay to inhibit at very slow swing

3.6.12 Power swing logic ZMRPSL

Function description	IEC 61850 identification	IEC 60617 identification	ANSI/IEEE C37.2 device number
Power swing logic	ZMRPSL	-	-

3.6.12.1 Application

Power Swing Logic (ZMRPSL) is a complementary function to Power Swing Detection (ZMRPSB, 68) function. It enables a reliable fault clearing for different faults on protected lines during power swings in power systems.

It is a general goal, to secure fast and selective operation of the distance protection scheme for the faults, which occur on power lines during power swings. It is possible to distinguish between the following main cases:

- A fault occurs on a so far healthy power line, over which the power swing has been detected and the fast distance protection zone has been blocked by ZMRPSB (68) element.
- The power swing occurs over two phases of a protected line during the dead time of a singlepole auto-reclosing after the Ph-E fault has been correctly cleared by the

distance protection. The second fault can, but does not need to, occur within this time interval.

- Fault on an adjacent line (behind the B substation, see figure 169) causes the measured impedance to enter the operate area of ZMRPSB (68) function and, for example, the zone 2 operating characteristic (see figure 170). Correct fault clearance initiates an evolving power swing so that the locus of the measured impedance continues through zone 1 operating characteristic and causes its unwanted operation, if no preventive measures have been taken, see figure 170.

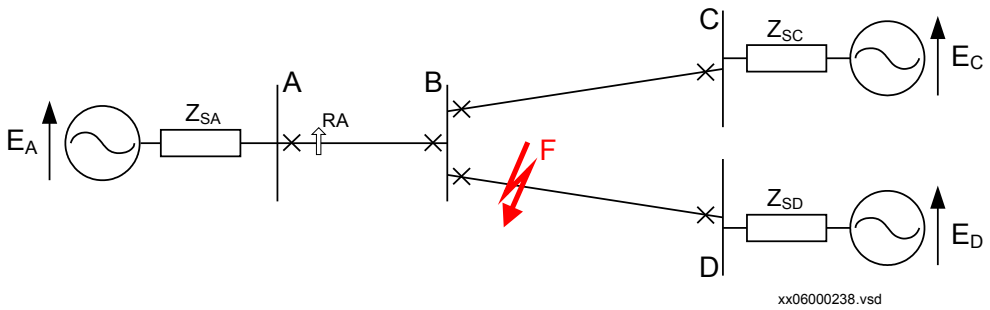

Figure 169: Fault on adjacent line and its clearance causes power swinging between sources A and C

ZMRPSL function and the basic operating principle of ZMRPSB (68) function operate reliably for different faults on parallel power lines with detected power swings. It is, however, preferred to keep the distance protection function blocked in cases of single phase-to-ground faults on so far healthy lines with detected power swings. In these cases, it is recommended to use an optionally available directional overcurrent ground-fault protection with scheme communication logic.

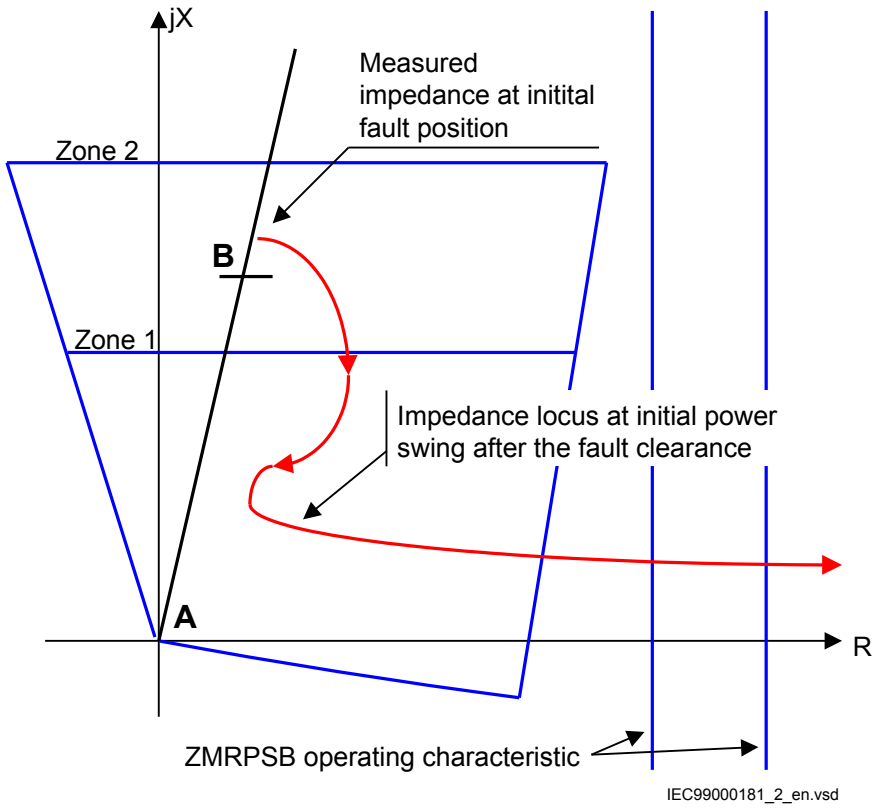

Figure 170: Impedance trajectory within the distance protection zones 1 and 2 during and after the fault on line B – D

3.6.12.2 Setting guidelines

Scheme communication and tripping for faults occurring during power swinging over the protected line

The IED includes generally up to five distance protection zones. It is possible to use one or two of them intentionally for selective fault clearing during power swings only. Following are the basic conditions for the operation of the so called (underreaching and overreaching) power-swing zones:

- They must generally be blocked during normal operation and released during power swings.
- Their operation must be time delayed but shorter (with sufficient margin) than the set time delay of normal distance protection zone 2, which is generally blocked by the power swing.
- Their resistive reach setting must secure, together with the set time delay for their operation, that the slowest expected swings pass the impedance operate area without initiating their operation.

Communication and tripping logic as used by the power swing distance protection zones is schematically presented in figure 171.

The operation of the power swing zones is conditioned by the operation of Power swing detection (ZMRPSB, 68) function. They operate in PUTT or POTT communication scheme with corresponding distance protection zones at the remote line end. It is preferred to use the communication channels over the optionally available “Line Data Communication Module - LDCM” and the “Binary signal transfer to remote end” function. It is also possible to include, in an easy way (by means of configuration possibilities), the complete functionality into regular scheme communication logic for the distance protection function. The communication scheme for the regular distance protection does not operate during the power-swing conditions, because the distance protection zones included in the scheme are normally blocked. The powerswing zones can for this reason use the same communication facilities during the power-swing conditions.

Only one power swing zone is necessary in distance protection at each line terminal, if the POTT communication scheme is applied. One underreaching power swing zone, which sends the time delayed carrier signal, and one overreaching power swing zone, which performs the local tripping condition, are necessary with PUTT schemes.

The operation of the distance protection zones with long time delay (for example, zone 3) is in many cases not blocked by the power swing detection elements. This allows in such cases the distance protection zone 3 (together with the full-scheme design of the distance protection function) to be used at the same time as the overreaching power-swing zone.

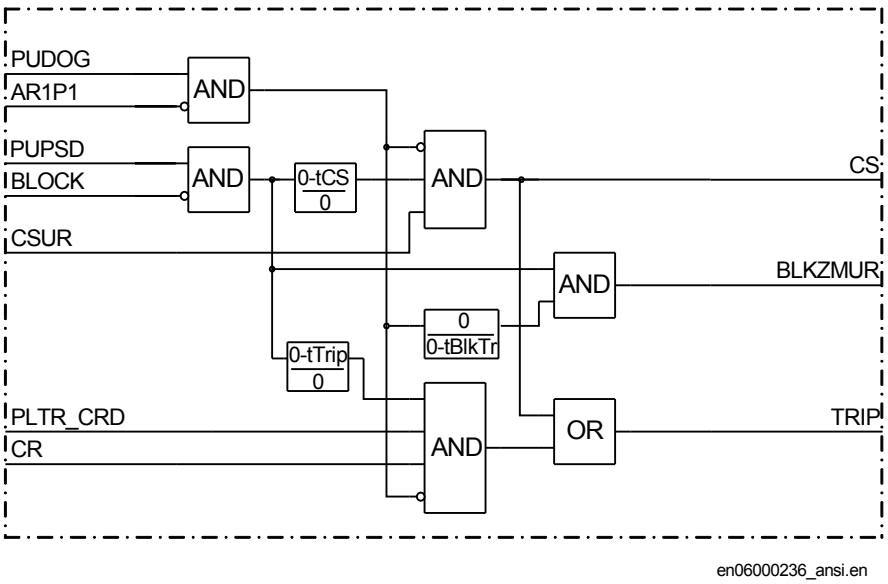

Figure 171: Simplified logic diagram - power swing communication and tripping logic

Configuration

Configure the BLOCK input to any combination of conditions, which are supposed to block the operation of logic. Connection to detected fuse failure conditions is required as a minimum.

The PUDOG functional input should be configured to the PICKUP signal of any line ground fault overcurrent protection function within the IED. When the directional ground fault O/C function is used an OR combination of forward and reverse operation should be used.

Connect the AR1P1 to the output signal of the autoreclosing function, which signals the activation of the single pole autoreclosing dead time.

The PUPSD input should be connected to the pickup signal of the power swing detection (ZMRPSB, 68) function, which becomes active in cases of detected system oscillations.

The CSUR functional input should be connected to the pickup output of the power swing distance protection zone, which is used as a local tripping criteria during power swings in PUTT schemes. When the POTT scheme is used (also on series compensated networks) the local criteria and the carrier sending zone are one and the same. It is preferred to use separate communication facilities for distance protection and for power swing communication logic, but combination of functionality within the same communication channel is possible as well.

The CR signal should be configured to the functional input which provides the logic with information on received carrier signal sent by the remote end power swing distance protection zone.

The CS functional output signal should be configured to either output relay or to corresponding input of the “Binary signal transfer to remote end” function.

The BLKZMPS output signal should be configured to BLOCK input of the power swing distance protection zones.

The TRIP signal should be connected correspondingly towards the tripping functionality of the complete distance protection within the IED.

Setting calculations

Time delay of power swing carrier send distance protection zones

Time delay for the underreaching or overreaching carrier send power swing zone should be set shorter (with sufficient margin) than the time delay of normal distance protection zone 2 to obtain selective time grading also in cases of faults during power swings. The necessary time difference depends mostly on the speed of the communication channel used, speed of the circuit breaker used, etc. Time difference between 100 ms and 150 ms is generally sufficient.

Reactive reach setting of power swing distance protection zones

Set the reactive reach for the power swing zones according to the system selectivity planning. The reach of the underreaching zone should not exceed 85% of the protected line length. The reach of the overreaching zone should be at least 120% of the protected line length.

Resistive reach setting of carrier send power swing distance protection zone

Determine the minimum possible speed of impedance $\Delta Z / \Delta t$ in primary Ω / s of the expected power swings. When better information is not available from system studies, the following equation may be used:

$$v_z = 2 \cdot Z_{L\min} \cdot f_{s\min}$$

(Equation 307)

Where:

v_z	is a minimum expected speed of swing impedance in Ω / *s*
Z_{Lmin}	is a minimum expected primary load impedance in Ω
f_{smin}	is a minimum expected oscillation (swing) frequency in *Hz*

Calculate the maximum permissible resistive reach for each power swing zone separately according to the following equations.

$$RFPP_n = v_z \cdot tnPP \cdot 0.8$$

(Equation 308)

$$RFPG_n = \frac{V_Z \cdot tnPG}{2} \cdot 0.8$$

(Equation 309)

Here is factor 0.8 considered for safety reasons and:

$RFPG_n$	phase-to-ground resistive reach setting for a power swing distance protection zone n in Ω
$RFPP_n$	phase-to-phase resistive reach setting for a power swing distance protection zone n in Ω
tnPG	time delay for phase-to-ground fault measurement of power swing distance protection zone n in *s*
tnPP	time delay for phase-to-phase fault measurement of power swing distance protection zone n in *s*

Time-delay for the overreaching power swing zone

Time delay for the overreaching power swing zone is not an important parameter, if the zone is used only for the protection purposes at power-swings.

Consider the normal time grading, if the overreaching zone serves as a time delayed back-up zone, which is not blocked by the operation of Power swing detection (ZMRPSB, 68) function.

Timers within the power swing logic

Settings of the timers within Power swing logic (ZMRPSL) depend to a great extent on the settings of other time delayed elements within the complete protection system. These settings differ within different power systems. The recommended settings consider only the general system conditions and the most used practice at different utilities. It is always necessary to check the local system conditions.

The carrier send timer *tCS* is used for safety reasons within the logic. It requires continuous presence of the input signal PUPSD, before it can issue a carrier send signal. A time delay between 50 and 100 ms is generally sufficient.

The trip timer *tTrip* is used for safety reasons within the logic. It requires continuous presence of the input signal PUPSD, before it can issue a tripping command during the power swings. A time delay between 50 and 100 ms is generally sufficient.

The blocking timer *tBlkTr* prolongs the presence of the BLKZMOR output signals, which can be used to block the operation of the power swing zones after the detected single-phase-to-ground faults during the power swings. It is necessary to permit the O/C EF protection to eliminate the initial fault and still make possible for the power swing zones to operate for possible consecutive faults. A time delay between 150 and 300 ms is generally sufficient.

Blocking and tripping logic for evolving power swings

The second part of a complete Power swing logic (ZMRPSL) functionality is a blocking and tripping logic for evolving power swings, see figure 169 and figure 170. The simplified logic is presented in figure 172. The logic controls the operation of the underreaching distance protection zone (Zone 1) at power swings, caused by the faults and their clearance on the adjacent power lines. The logic should generally be configured between distance protection zones 1 and 2.

Configuration

The fault impedance should be detected within the external boundary of Power Swing Detection (ZMRPSB, 68) function without power swing detected during the entire fault duration. Configure for this reason the PUZMPSD to the functional output signal of ZMRPSB (68) function, which indicates the measured impedance within its external boundaries.

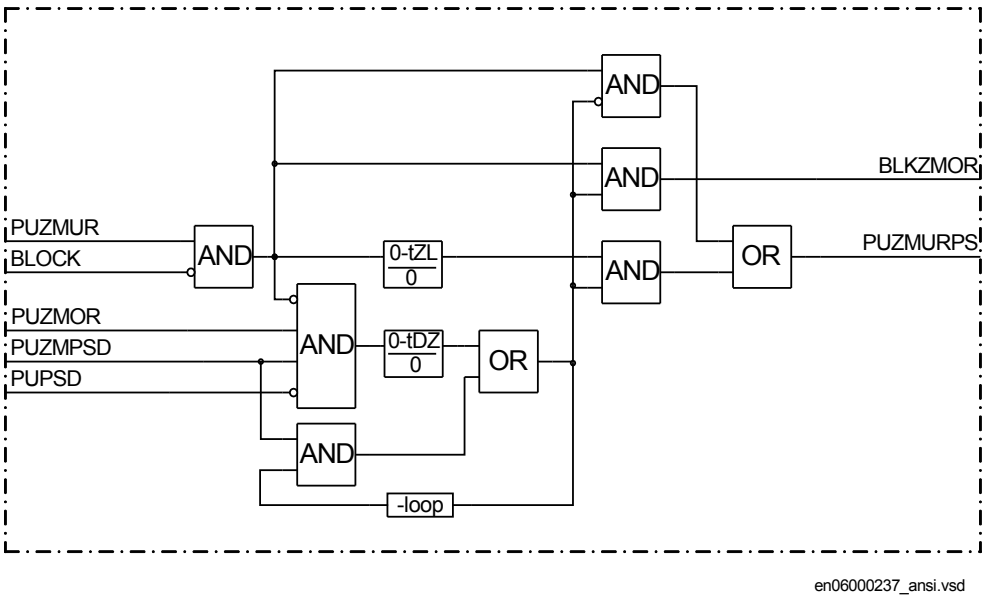

Figure 172: Blocking and tripping logic for evolving power swings

No system oscillation should be detected in power system. Configure for this reason the PUPSD functional input to the PICKUP functional output of ZMRPSB (68) function or to any binary input signal indicating the detected oscillations within the power system.

Configure the functional input PUZMUR to the pickup output of the instantaneous underreaching distance protection zone (usually PICKUP of distance protection zone 1). The function will determine whether the pickup signal of this zone is permitted to be used in further logic or not, dependent on time difference on appearance of overreaching distance protection zone (usually zone 2).

Configure for this reason the functional output signal PUZMURPS to the pickup output of the overreaching distance protection zone (usually PICKUP of distance protection zone 2).

Functional output PUZMLL replaces the pickup (and trip) signals of the distance protection zone 1 in all following logic. Configure it accordingly within the logic.

Functional output signal BLKZMOR should be configured to block the overreach distance protection zone (generally zone 2) in order to prevent its maloperation during the first swinging of the system. Configure it accordingly to BLOCK functional input of distance protection zone 2.

Setting calculations

Setting of the differentiating timer *tDZ* influences to a great extent the performance of the protection during the power swings, which develops by occurrence and clearance

of the faults on adjacent power lines. It is necessary to consider the possibility for the faults to occur close to the set reach of the underreaching distance protection zone, which might result in prolonged operate times of zone 1 (underreaching zone) compared to zone 2 pickuped time (overreaching zone). A setting between 80 and 150 ms is generally sufficient.

The release timer *tZL* permits unconditional operation of the underreaching zone, if the measured impedance remains within its operate characteristic longer than the set time *tZL*. Its setting depends on the expected speed of the initial swings and on the setting of the time delay for the overreaching zone 2. The release timer must still permit selective tripping of the distance protection within the complete network. A setting between 200 and 300 ms is generally sufficient.

3.6.12.3 Setting parameters

Table 81: ZMRPSL Group settings (basic)

Name	Values (Range)	Unit	Step	Default	Description
Operation	Disabled Enabled	-	-	Disabled	Disable/Enable Operation
tDZ	0.000 - 60.000	s	0.001	0.050	Permitted max oper time diff between higher and lower zone
tDZMUR	0.000 - 60.000	s	0.001	0.200	Delay for oper of underreach zone with detected diff in oper time
tCS	0.000 - 60.000	s	0.001	0.100	Conditional timer for sending the CS at power swings
tTrip	0.000 - 60.000	s	0.001	0.100	Conditional timer for tripping at power swings
tBlkTr	0.000 - 60.000	s	0.001	0.300	Timer for blocking the overreaching zones trip

3.6.13 Pole slip protection PSPPPAM (78)

Function description	IEC 61850 identification	IEC 60617 identification	ANSI/IEEE C37.2 device number
Pole slip protection	PSPPPAM	U_{cos}	78

3.6.13.1 Application

Normally, the generator operates synchronously with the power system, that is, all the generators in the system have the same angular velocity and approximately the same phase angle difference. If the phase angle between the generators gets too large the stable operation of the system cannot be maintained. In such a case the generator loses the synchronism (pole slip) to the external power system.

The situation with pole slip of a generator can be caused by different reasons.

A short circuit occurs in the external power grid, close to the generator. If the fault clearance time is too long, the generator will accelerate so much, so the synchronism cannot be maintained. The relative generator phase angle at a fault and pole slip, relative to the external power system, is shown in figure 173.

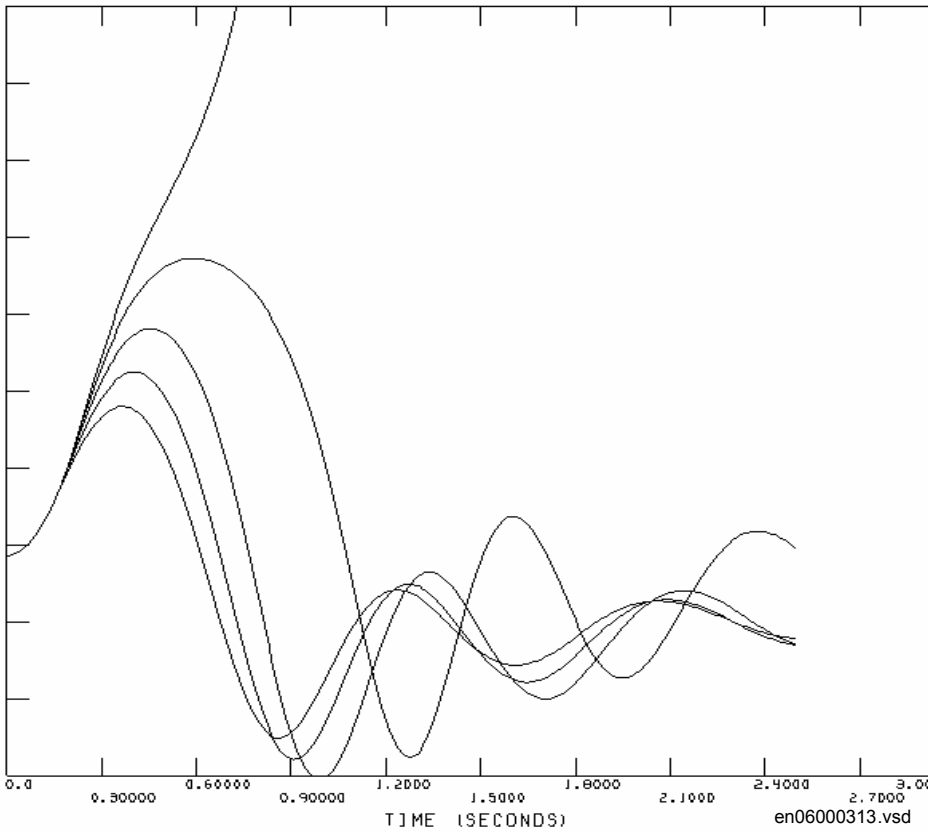

Figure 173: Relative generator phase angle at a fault and pole slip relative to the external power system

The relative angle of the generator is shown for different fault duration at a three-phase short circuit close to the generator. As the fault duration increases the angle swing amplitude increases. When the critical fault clearance time is reached the stability cannot be maintained.

Un-damped oscillations occur in the power system, where generator groups at different locations, oscillate against each other. If the connection between the generators is too weak the amplitude of the oscillations will increase until the angular stability is lost. At the moment of pole slip there will be a centre of this pole slip, which is equivalent with distance protection impedance measurement of a three-phase. If this point is situated in

the generator itself, the generator should be tripped as fast as possible. If the locus of the out of step centre is located in the power system outside the generators the power system should, if possible, be split into two parts, and the generators should be kept in service. This split can be made at predefined locations (trip of predefined lines) after function from pole slip protection (PSPPPAM ,78) in the line protection IED.

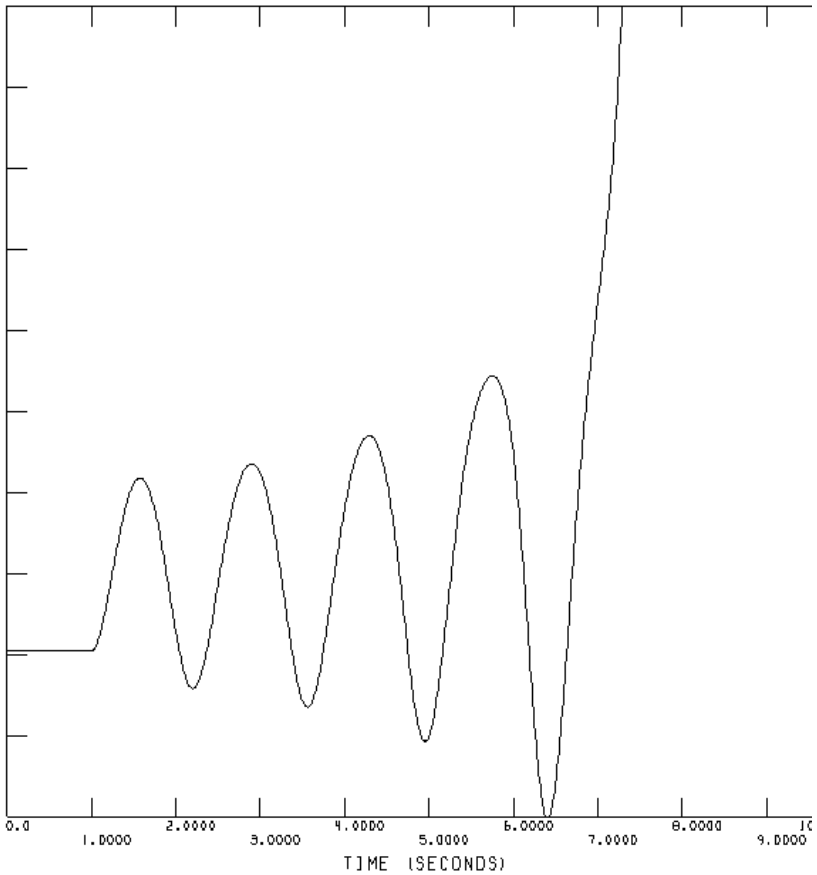

Figure 174: Undamped oscillations causing pole slip

The relative angle of the generator is shown a contingency in the power system, causing un-damped oscillations. After a few periods of the oscillation the swing amplitude gets to large and the stability cannot be maintained.

If the excitation of the generator gets too low there is a risk that the generator cannot maintain synchronous operation. The generator will slip out of phase and operate as an induction machine. Normally the under-excitation protection will detect this state and trip the generator before the pole slip. For this fault the under-excitation protection and PSPPPAM (78) function will give mutual redundancy.

The operation of a generator having pole slip will give risk of damages to the generator block.

- At each pole slip there will be significant torque impact on the generator-turbine shaft.
- In asynchronous operation there will be induction of currents in parts of the generator normally not carrying current, thus resulting in increased heating. The consequence can be damages on insulation and stator/rotor iron.
- At asynchronous operation the generator will absorb a significant amount of reactive power, thus risking overload of the windings.

PSPPPAM (78) function shall detect out of step conditions and trip the generator as fast as possible if the locus of the pole slip is inside the generator. If the centre of pole slip is outside the generator, situated out in the power grid, the first action should be to split the network into two parts, after line protection action. If this fails there should be operation of the generator pole slip protection, to prevent further damages to the generator block.

3.6.13.2 Setting guidelines

Operation: With the parameter *Operation* the function can be set *Enabled* or *DIsabled*.

IBase: The parameter *IBase* is set to the generator rated current in A, according to equation 310.

$$IBase = \frac{S_N}{\sqrt{3} \cdot U_N}$$

(Equation 310)

VBase: The parameter *VBase* is set to the generator rated Voltage (phase-to-phase) in kV

MeasureMode: The voltage and current used for the impedance measurement is set by the parameter *MeasureMode*. The setting possibilities are: *PosSeq*, *AB*, *BC*, or *CA*. If all phase voltages and phase currents are fed to the IED the *PosSeq* alternative is recommended (default).

Further settings can be illustrated in figure 175.

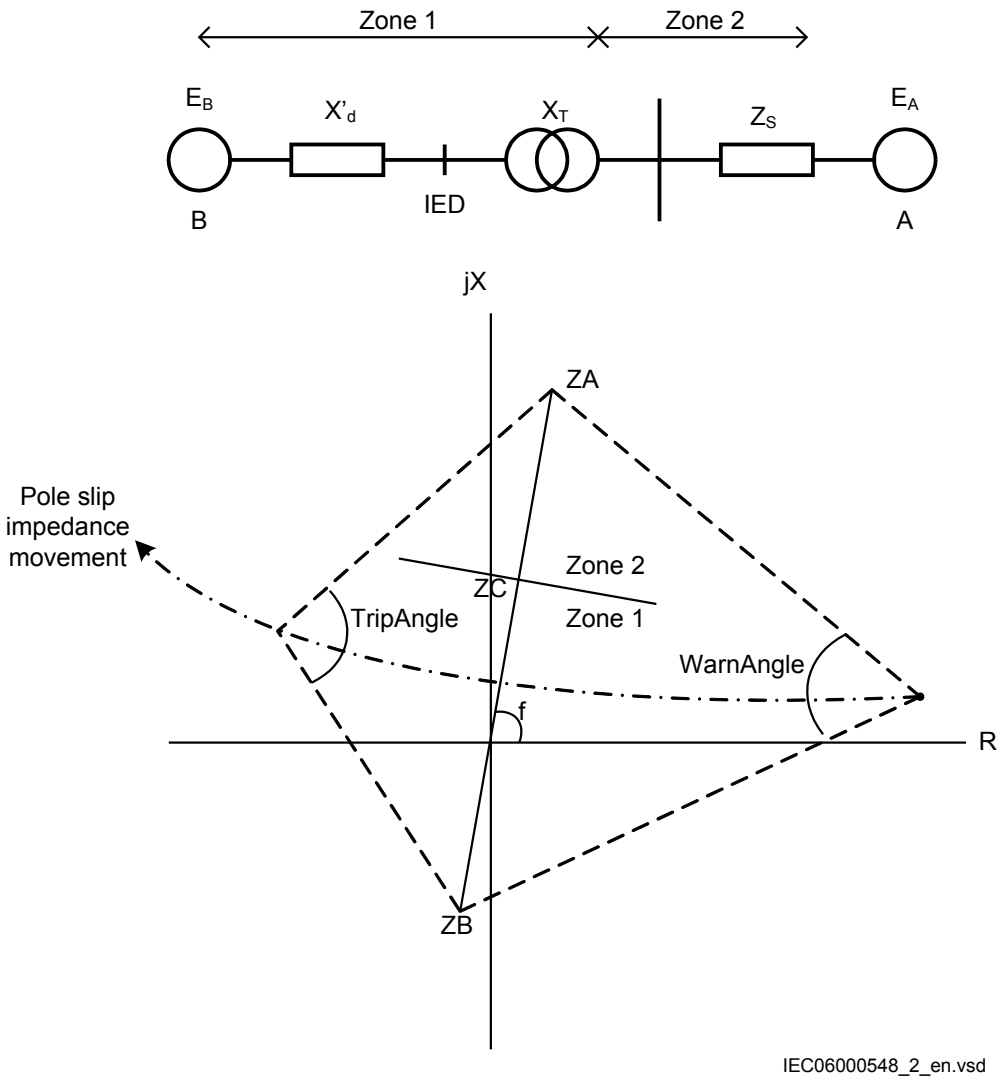

Figure 175: Settings for the Pole slip detection function

The *ImpedanceZA* is the forward impedance as show in figure 175. *ZA* should be the sum of the transformer impedance XT and the equivalent impedance of the external system ZS. The impedance is given in % of the base impedance, according to equation 311.

$$Z_{Base} = \frac{UBase/\sqrt{3}}{IBase}$$

(Equation 311)

The *ImpedanceZB* is the reverse impedance as show in figure 175. *ZB* should be equal to the generator transient reactance X'd. The impedance is given in % of the base impedance, see equation 311.

The *ImpedanceZC* is the forward impedance giving the borderline between zone 1 and zone 2. ZC should be equal to the transformer reactance ZT. The impedance is given in % of the base impedance, see equation 311.

The angle of the impedance line ZB – ZA is given as *AnglePhi* in degrees. This angle is normally close to 90°.

StartAngle: An alarm is given when movement of the rotor is detected and the rotor angle exceeds the angle set for *StartAngle*. The default value 110° is recommended. It should be checked so that the points in the impedance plane, corresponding to the chosen *StartAngle* does not interfere with apparent impedance at maximum generator load.

TripAngle: If a pole slip has been detected: change of rotor angle corresponding to slip frequency 0.2 – 8 Hz, the slip line ZA – ZB is crossed and the direction of rotation is the same as at start, a trip is given when the rotor angle gets below the set *TripAngle*. The default value 90° is recommended.

N1Limit: The setting *N1Limit* gives the number of pole slips that should occur before trip, if the crossing of the slip line ZA – ZB is within zone 1, that is, the node of the pole slip is within the generator transformer block. The default value 1 is recommended to minimize the stress on the generator and turbine at out of step conditions.

N2Limit: The setting *N2Limit* gives the number of pole slips that should occur before trip, if the crossing of the slip line ZA – ZB is within zone 2, that is, the node of the pole slip is in the external network. The default value 3 is recommended give external protections possibility to split the network and thus limit the system consequencies.

ResetTime: The setting *ResetTime* gives the time for (PSPPPAM ,78) function to reset after start when no pole slip been detected. The default value 5s is recommended.

Setting example for line application

In case of out of step conditions this shall be detected and the line between substation 1 and 2 shall be tripped.

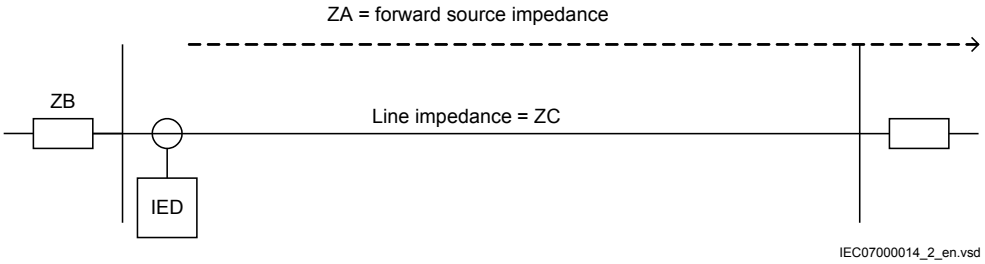

Figure 176: Line application of pole slip protection

If the apparent impedance crosses the impedance line ZB – ZA this is the detection criterion of out of step conditions, see figure 177.

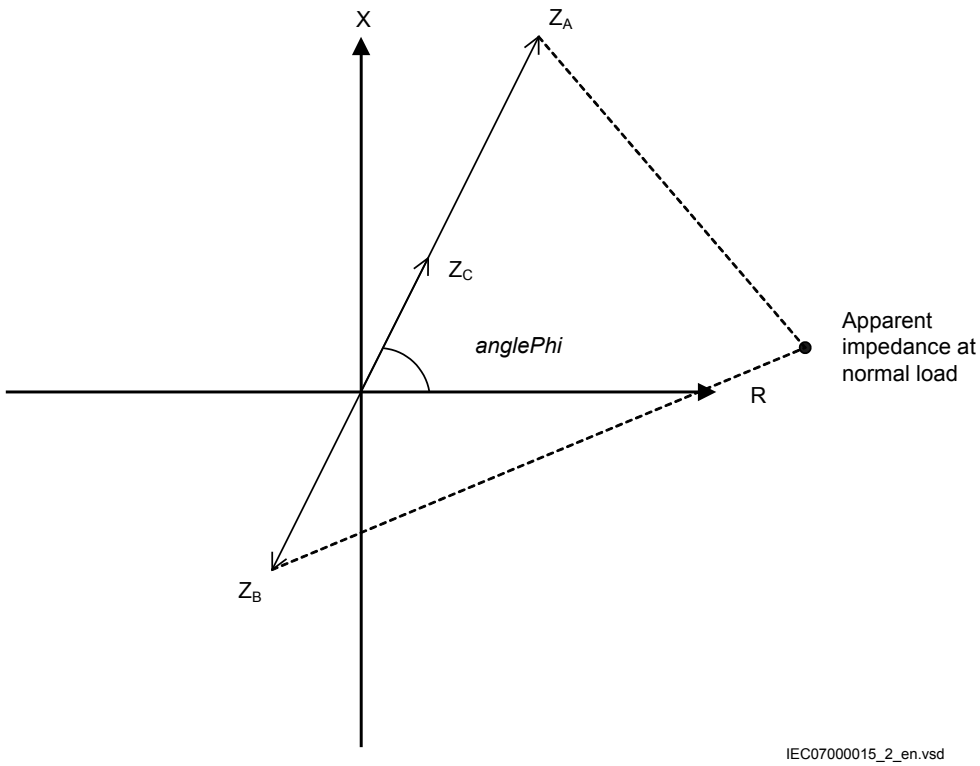

Figure 177: Impedances to be set for pole slip protection

The setting parameters of the protection is:

Z_A:	Line + source impedance in the forward direction
Z_B:	The source impedance in the reverse direction
Z_C:	The line impedance in the forward direction
AnglePhi:	The impedance phase angle

Use the following data:

UBase: 400 kV

SBase set to 1000 MVA

Short circuit power at station 1 without infeed from the protected line: 5000 MVA (assumed to a pure reactance)

Short circuit power at station 2 without infeed from the protected line: 5000 MVA (assumed to a pure reactance

Line impedance: 2 + j20 ohm

With all phase voltages and phase currents available and fed to the protection IED, it is recommended to set the *MeasureMode* to positive sequence.

The impedance settings are set in pu with ZBase as reference:

$$ZBase = \frac{UBase^2}{SBase} = \frac{400^2}{1000} = 160 ohm$$

(Equation 312)

$$ZA = Z(line) + Zsc(station2) = 2 + j20 + j\frac{400^2}{5000} = 2 + j52 ohm$$

(Equation 313)

This corresponds to:

$$ZA = \frac{2 + j52}{160} = 0.0125 + j0.325 pu = 0.325\angle 88° pu$$

(Equation 314)

Set ZA to 0.32.

$$ZB = Zsc(station1) = j\frac{400^2}{5000} = j32 ohm$$

(Equation 315)

This corresponds to:

$$ZB = \frac{j32}{160} = j0.20 pu = 0.20\angle 90° pu$$

(Equation 316)

Set ZB to 0.2

This corresponds to:

$$ZC = \frac{2 + j20}{160} = 0.0125 + j0.125 pu = 0.126\angle 84° pu$$

(Equation 317)

Set ZC to 0.13 and *AnglePhi* to 88°

The warning angle (*StartAngle*) should be chosen not to cross into normal operating area. The maximum line power is assumed to be 2000 MVA. This corresponds to apparent impedance:

$$Z = \frac{U^2}{S} = \frac{400^2}{2000} = 80 ohm$$

(Equation 318)

Simplified, the example can be shown as a triangle, see figure 178.

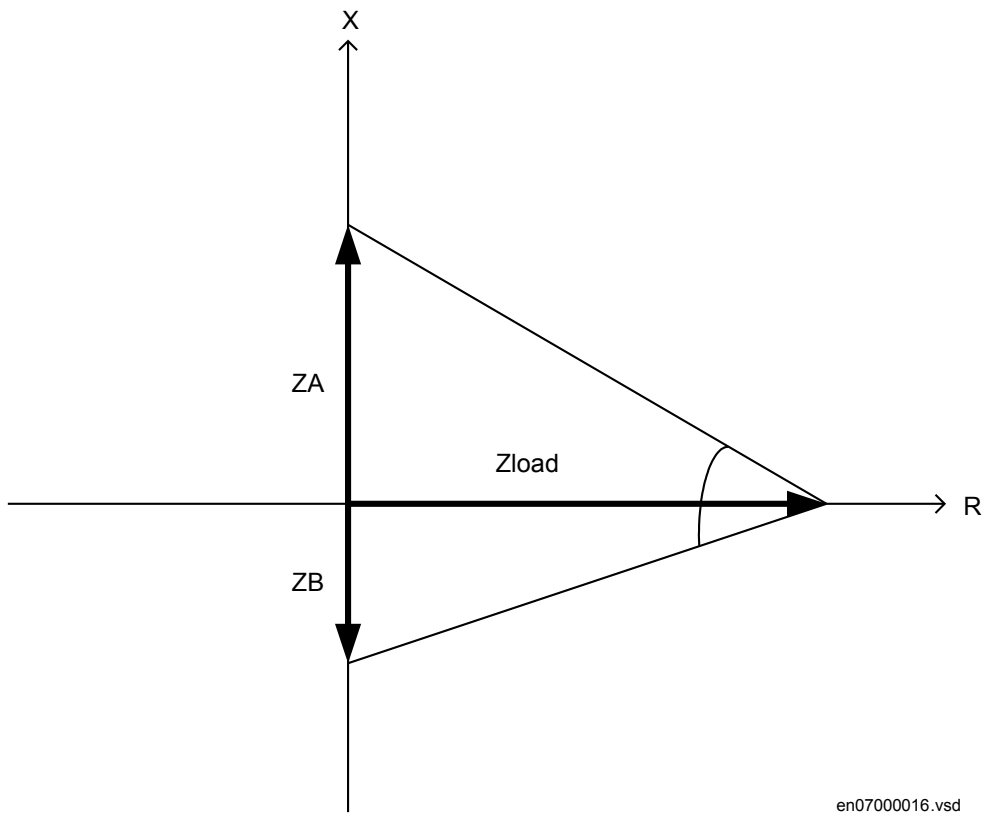

Figure 178: Simplified figure to derive StartAngle

$$angleStart \geq \arctan\frac{ZB}{Zload} + \arctan\frac{ZA}{Zload} = \arctan\frac{32}{80} + \arctan\frac{52}{80} = 21.8^0 + 33.0 \approx 55^0$$

(Equation 319)

In case of minor damped oscillations at normal operation we do not want the protection to start. Therefore we set the start angle with large margin.

Set *StartAngle* to 110°

For the *TripAngle* it is recommended to set this parameter to 90° to assure limited stress for the circuit breaker.

In a power system it is desirable to split the system into predefined parts in case of pole slip. The protection is therefore situated at lines where this predefined split shall take place.

Normally the *N1Limit* is set to 1 so that the line will be tripped at the first pole slip.

If the line shall be tripped at all pole slip situations also the parameter *N2Limit* is set to 1. In other cases a larger number is recommended.

Setting example for generator application

In case of out of step conditions this shall be checked if the pole slip centre is inside the generator (zone 1) or if it is situated in the network (zone 2).

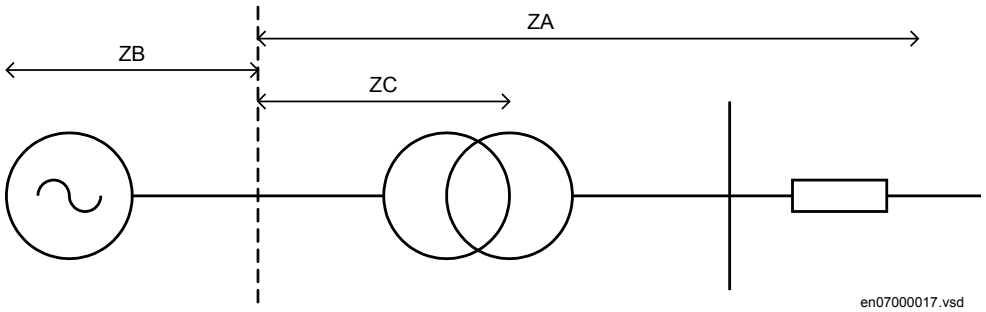

Figure 179: Generator application of pole slip protection

If the apparent impedance crosses the impedance line ZB – ZA this is the detected criterion of out of step conditions, see figure 180.

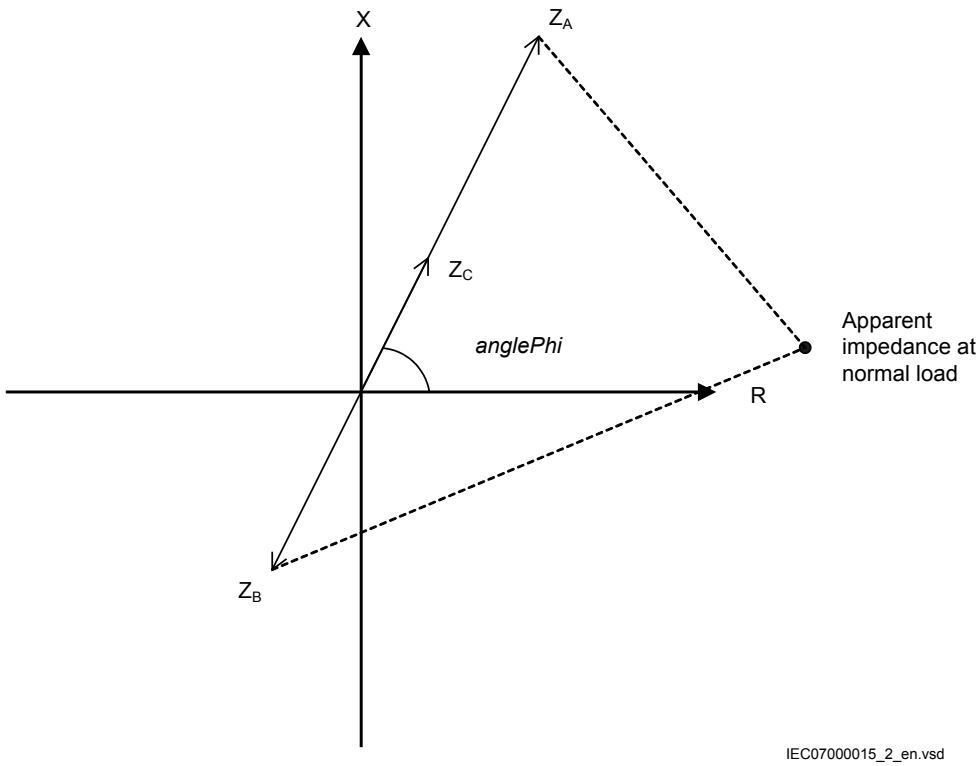

Figure 180: Impedances to be set for pole slip protection PSPPPAM (78)

The setting parameters of the protection are:

Z_A	Block transformer + source impedance in the forward direction
Z_B	The generator transient reactance
Z_C	The block transformer reactance
AnglePhi	The impedance phase angle

Use the following generator data:

VBase: 20 kV

SBase set to 200 MVA

X_d': 25%

Use the following block transformer data:

VBase: 20 kV (low voltage side)

SBase set to 200 MVA

e_k: 15%

Short circuit power from the external network without infeed from the protected line: 5000 MVA (assumed to a pure reactance).

We have all phase voltages and phase currents available and fed to the protection IED. Therefore it is recommended to set the *MeasureMode* to positive sequence.

The impedance settings are set in pu with ZBase as reference:

$$ZBase = \frac{UBase^2}{SBase} = \frac{20^2}{200} = 2.0ohm$$

(Equation 320)

$$ZA = Z(transf) + Zsc(network) = j\frac{20^2}{200} \cdot 0.15 + j\frac{20^2}{5000} = j0.38ohm$$

(Equation 321)

This corresponds to:

$$ZA = \frac{j0.38}{2.0} = j0.19pu = 0.19\angle 90° pu$$

(Equation 322)

Set ZA to 0.19

$$ZB = jX_d' = j\frac{20^2}{200} \cdot 0.25 = j0.5ohm$$

(Equation 323)

This corresponds to:

$$ZB = \frac{j0.5}{2.0} = j0.25pu = 0.25\angle 90° pu$$

(Equation 324)

Set ZB to 0.25

$$ZC = jX_T = j\frac{20^2}{200} \cdot 0.15 = j0.3ohm$$

(Equation 325)

This corresponds to:

$$ZC = \frac{j0.3}{2.0} = j0.15pu = 0.15\angle 90^o pu$$

(Equation 326)

Set ZC to 0.15 and *AnglePhi* to 90°.

The warning angle (*StartAngle*) should be chosen not to cross into normal operating area. The maximum line power is assumed to be 200 MVA. This corresponds to apparent impedance:

$$Z = \frac{U^2}{S} = \frac{20^2}{200} = 2ohm$$

(Equation 327)

Simplified, the example can be shown as a triangle, see figure 181.

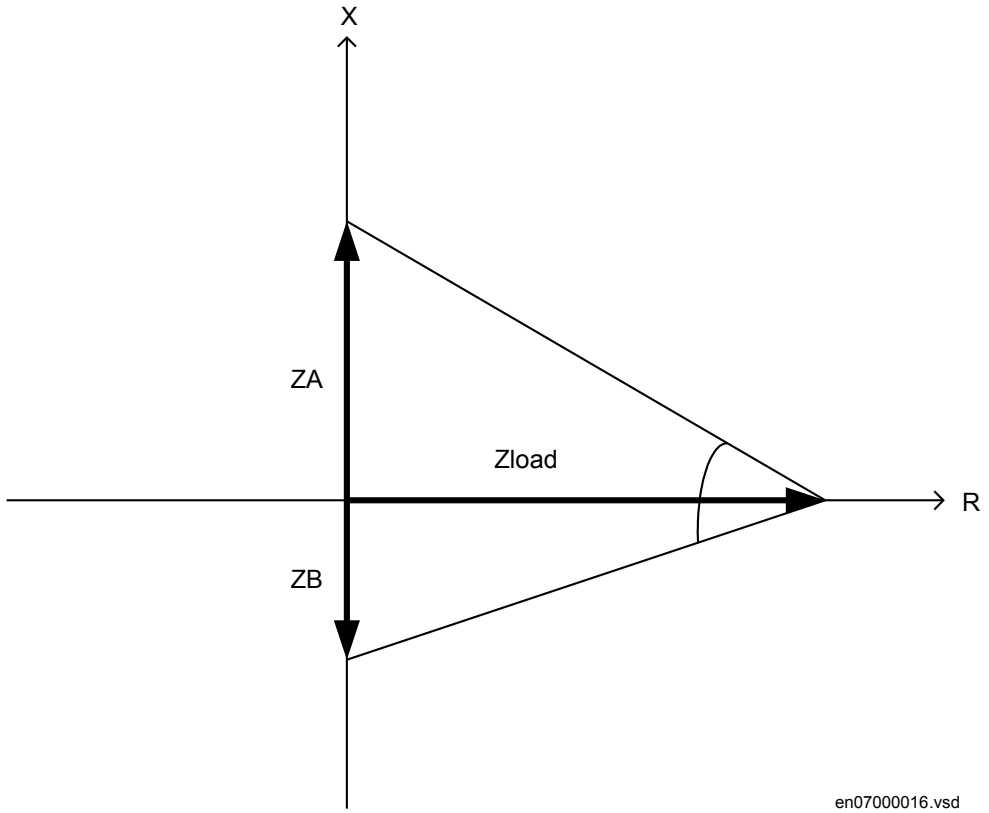

Figure 181: Simplified figure to derive StartAngle

$$angleStart \geq \arctan\frac{ZB}{Zload} + \arctan\frac{ZA}{Zload} = \arctan\frac{0.25}{2} + \arctan\frac{0.19}{2} = 7.1^0 + 5.4 \approx 13^0$$

(Equation 328)

In case of minor damped oscillations at normal operation we do not want the protection to start. Therefore we set the start angle with large margin.

Set *StartAngle* to 110°.

For the *TripAngle* it is recommended to set this parameter to 90° to assure limited stress for the circuit breaker.

If the centre of pole slip is within the generator block set *N1Limit* to 1 to get trip at first pole slip.

If the centre of pole slip is within the network set *N2Limit* to 3 to get enable split of the system before generator trip.

3.6.13.3 Setting parameters

Table 82: PSPPPAM (78) Group settings (basic)

Name	Values (Range)	Unit	Step	Default	Description
Operation	Disabled Enabled	-	-	Disabled	Operation Enable / Disable
OperationZ1	Disabled Enabled	-	-	Enabled	Operation Enable/Disable zone Z1
OperationZ2	Disabled Enabled	-	-	Enabled	Operation Enable/Disable zone Z2
ImpedanceZA	0.00 - 1000.00	%	0.01	10.00	Forward impedance in % of Zbase
ImpedanceZB	0.00 - 1000.00	%	0.01	10.00	Reverse impedance in % of Zbase
ImpedanceZC	0.00 - 1000.00	%	0.01	10.00	Impedance of zone1 limit in % of Zbase
AnglePhi	72.00 - 90.00	Deg	0.01	85.00	Angle of the slip impedance line
StartAngle	0.0 - 180.0	Deg	0.1	110.0	Rotor angle for the pickup signal
TripAngle	0.0 - 180.0	Deg	0.1	90.0	Rotor angle for the trip1 and trip2 signals
N1Limit	1 - 20	-	1	1	Count limit for the trip1 signal
N2Limit	1 - 20	-	1	3	Count limit for the trip2 signal

Table 83: PSPPPAM (78) Group settings (advanced)

Name	Values (Range)	Unit	Step	Default	Description
ResetTime	0.000 - 60.000	s	0.001	5.000	Time without slip to reset all signals

Table 84: PSPPPAM (78) Non group settings (basic)

Name	Values (Range)	Unit	Step	Default	Description
IBase	0.1 - 99999.9	A	0.1	3000.0	Base Current (primary phase current in Amperes)
Vbase	0.1 - 9999.9	kV	0.1	20.0	Base Voltage (primary phase-to-phase voltage in kV)
MeasureMode	PosSeq AB BC CA	-	-	PosSeq	Measuring mode (PosSeq, AB, BC, CA)
InvertCTcurr	No Yes	-	-	No	Invert current direction

3.6.14 Automatic switch onto fault logic, voltage and current based ZCVPSOF

Function description	IEC 61850 identification	IEC 60617 identification	ANSI/IEEE C37.2 device number
Automatic switch onto fault logic, voltage and current based	ZCVPSOF	-	-

3.6.14.1 Application

Automatic switch onto fault logic, voltage and current based function (ZCVPSOF) is a complementary function to impedance measuring functions, but may make use of information from such functions.

With ZCVPSOF function, a fast trip is achieved for a fault on the whole line, when the line is being energized. ZCVPSOF tripping is generally non-directional in order to secure a trip at fault situations where directional information can not be established, for example, due to lack of polarizing voltage when a line potential transformer is used.

Automatic activation based on dead line detection can only be used when the potential transformer is situated on the line side of a circuit breaker.

When line side potential transformers are used, the use of non-directional distance zones secures switch onto fault tripping for close-in three-phase short circuits. Use of non-directional distance zones also gives fast fault clearance when energizing a bus from the line with a short-circuit fault on the bus.

Other protection functions like time delayed phase and zero sequence overcurrent function can be connected to ZCVPSOF function to increase the dependability in the scheme.

3.6.14.2 Setting guidelines

The parameters for Automatic switch onto fault logic, voltage and current based function (ZCVPSOF) are set via the local HMI or Protection and Control Manager PCM600.

The distance protection zone used for instantaneous trip by ZCVPSOF function has to be set to cover the entire protected line with a safety margin of minimum 20%.

Operation: The operation of Automatic switch onto fault logic, voltage and current based function is by default set to *Enabled*. Set the parameter to *Disabled* if the function is not to be used.

IBase is normally set to the current value of the primary winding of the CT, but can also be set to the rated current of the bay. It is by default set to 3000 A and shall be adapted to the actual application.

VBase is set to the voltage value of the primary winding of the VT. It is by default set to 400 kV and shall be adapted to the actual application.

IphPickup is used to set current level for detection of dead line.*IphPickup* is by default set to 20% of *IBase*. It shall be set with sufficient margin (15 - 20%) under the minimum expected load current. In many cases the minimum load current of a line is close to 0 and even 0. The operate value must exceed the maximum charging current of an overhead line, when only one phase is disconnected (mutual coupling the other phases).

UVPickup is used to set voltage level for detection of dead line. *UVPickup* is by default set to 70% of *VBase*. This is a suitable setting in most cases, but it is recommended to checking the suitability in the actual application.

Mode: The operation of ZCVPSOF has three modes for defining the criteria for trip. The setting of the *Mode* is by default set to *VILevel*, which means that the tripping criteria is based on the setting of *IPhPickup* and *UVPickup*. The choice of *VILevel* gives faster and more sensitive operation of the function, which is important to reduce the stress that might occur when energizing onto a fault. On the other hand the risk for over function might be higher due to that the voltage recovery in some systems can be slow given unwanted operation at energizing the line if the timer *tDuration* is set too short.

When *Mode* is set to *Impedance*, the operation criteria is based on the start of overeaching zone from impedance zone measurement. A non-directional output signal should be used from an overreaching zone. The selection of Impedance mode gives increased security.

In operation mode *VILvl&Imp* the condition for trip is an OR-gate between *VILevel* and *VILvl&Imp*.

The setting of the timer for release of the *VILevel*, *tDuration* is by default set to 0.020 sec. In some cases, especially for series compensated lines, it might be needed to increase this time to consider the voltage recovery time at energizing the line. A setting equal to 0.1 sec have been proven to be suitable in most cases from field experience.

AutoInit: Automatic activating of the ZCVPSOF function is by default set to *Disabled*. If automatic activation Deadline detection is required, set the parameter *Autoinit* to *Enabled*. Otherwise the logic will be activated by an external BC input.

tSOTF: The drop delay of ZCVPSOF function is by default set to 1 second, which is suitable for most applications.

tDLD: The time delay for activating ZCVPSOF function by the internal dead line detection is by default set to 0.2 seconds. This is suitable in most applications. The delay shall not be set too short to avoid unwanted activations during transients in the system.

3.6.14.3 Setting parameters

Table 85: ZCVPSOF Group settings (basic)

Name	Values (Range)	Unit	Step	Default	Description
Operation	Disabled Enabled	-	-	Enabled	Disable/Enable Operation
IBase	1 - 99999	A	1	3000	Base current (A)
VBase	0.05 - 2000.00	kV	0.05	400.00	Base voltage Ph-Ph (kV)
Mode	Impedance VILevel VILvl&Imp	-	-	VILevel	Mode of operation of SOTF Function
AutoInit	Disabled Enabled	-	-	Disabled	Automatic switch onto fault initialization
IphPickup	1 - 100	%IB	1	20	Current level for detection of dead line in % of IBase
UVPickup	1 - 100	%VB	1	70	Voltage level for detection of dead line in % of VBase
tDuration	0.000 - 60.000	s	0.001	0.020	Time delay for VI detection (s)
tSOTF	0.000 - 60.000	s	0.001	1.000	Drop off delay time of switch onto fault function
tDLD	0.000 - 60.000	s	0.001	0.200	Delay time for activation of dead line detection

3.6.15 Phase preference logic PPLPHIZ

Function description	IEC 61850 identification	IEC 60617 identification	ANSI/IEEE C37.2 device number
Phase preference logic	PPLPHIZ	-	-

3.6.15.1 Application

Phase preference logic function PPLPHIZ is an auxiliary function to Distance protection zone, quadrilateral characteristic ZMQPDIS (21) and Phase selection with load encroachment, quadrilateral characteristic function FDPSPDIS (21). The purpose is to create the logic in resonance or high resistive grounded systems (normally sub-transmission) to achieve the correct phase selective tripping during two simultaneous single-phase ground-faults in different phases on different line sections.

Due to the resonance/high resistive grounding principle, the ground faults in the system gives very low fault currents, typically below 25 A. At the same time, the occurring system voltages on the healthy phases will increase to line voltage level as the neutral displacement is equal to the phase voltage level at a fully developed ground fault. This increase of the healthy phase voltage, together with slow tripping, gives a considerable increase of the risk of a second fault in a healthy phase and the second fault can occur

at any location. When it occurs on another feeder, the fault is commonly called cross-country fault.

Different practices for tripping is used by different utilities. The main use of this logic is in systems where single phase-to-ground faults are not automatically cleared, only alarm is given and the fault is left on until a suitable time to send people to track down and repair the fault. When cross-country faults occur, the practice is to trip only one of the faulty lines. In other cases, a sensitive, directional ground-fault protection is provided to trip, but due to the low fault currents long tripping times are utilized.

Figure 182 shows an occurring cross-country fault. Figure 183 shows the achievement of line voltage on healthy phases and an occurring cross-country fault.

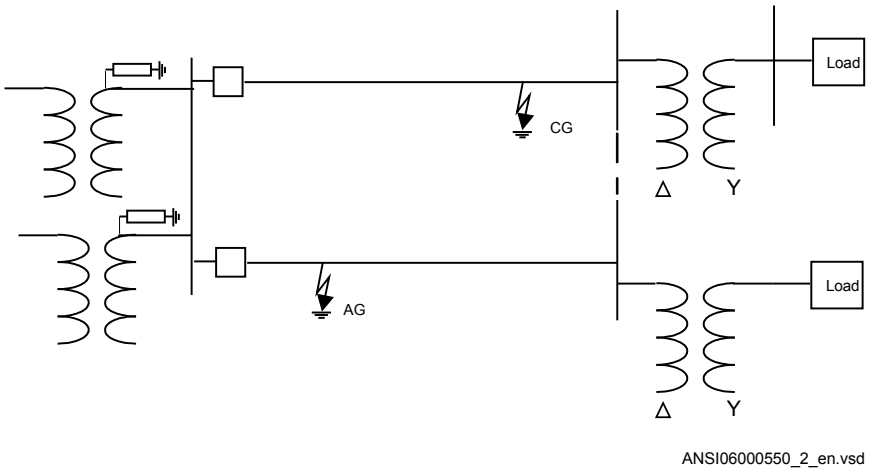

Figure 182: An occurring cross-country fault on different feeders in a sub-transmission network, high impedance (resistance, reactance) grounded

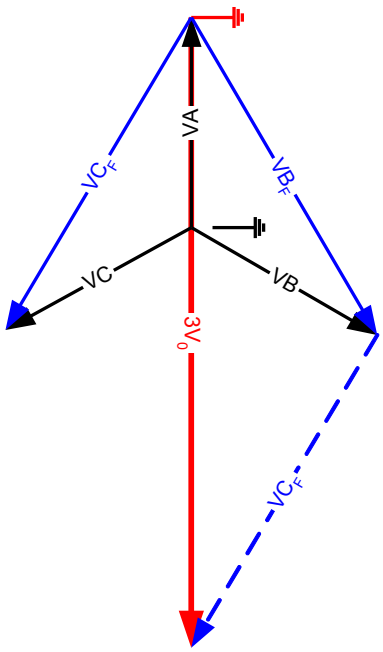

Figure 183: The voltage increase on healthy phases and occurring neutral point voltage (3V0) at a single phase-to-ground fault and an occurring cross-country fault on different feeders in a sub-transmission network, high impedance (resistance, reactance) grounded

PPLPHIZ is connected between Distance protection zone, quadrilateral characteristic function ZMQPDIS (21) and ZMQAPDIS (21) and Phase selection with load encroachment, quadrilateral characteristic function FDPSPDIS (21) as shown in figure 184. The integer from the phase selection function, which gives the type of fault undergoes a check and will release the distance protection zones as decided by the logic. The logic includes a check of the fault loops given by the phase selection and if the fault type indicates a two or three phase fault the integer releasing the zone is not changed.

If the fault indicates and ground-fault checks are done which mode of tripping to be used, for example ABCAc, which means that fault in the phases are tripped in the cyclic order A before B before C before A. Local conditions to check the phase-to-ground voltage levels and occurring zero sequence current and voltages completes the logic.

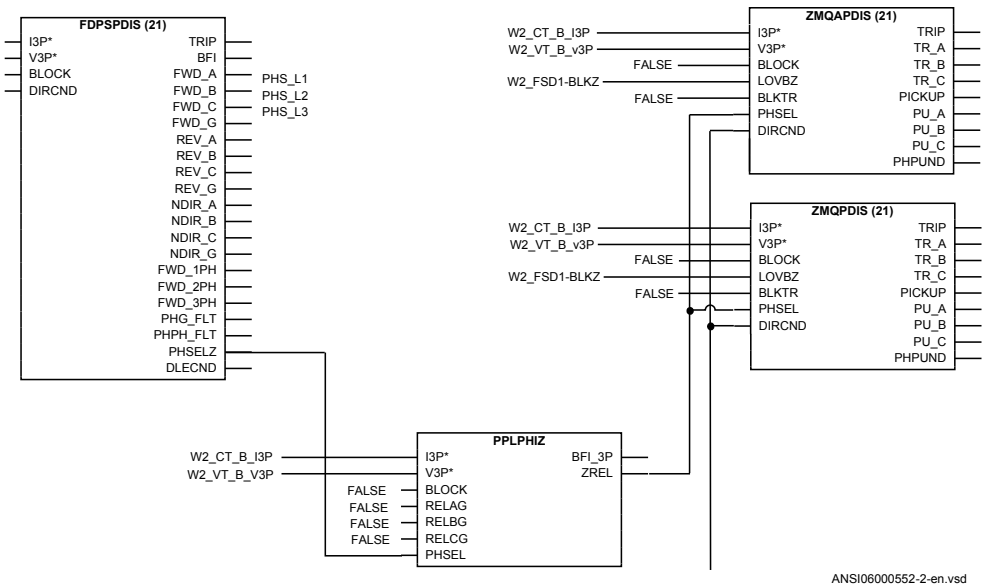

Figure 184: The connection of Phase preference logic function PPLPHIZ between Distance protection zone, quadrilateral characteristic ZMQPDIS (21) and ZMQAPDIS (21) and Phase selection with load encroachment, quadrilateral characteristic function FDPSPDIS (21)

As the fault is a double ground-faults at different locations of the network, the fault current in the faulty phase on each of the lines will be seen as a phase current and at the same time as a neutral current as the remaining phases on each feeder virtually carries no (load) current. A current through the grounding impedance does not exist. It is limited by the impedance to below the typical, say 25 to 40 A. Occurring neutral current is thus a sign of a cross-country fault (a double ground- fault)

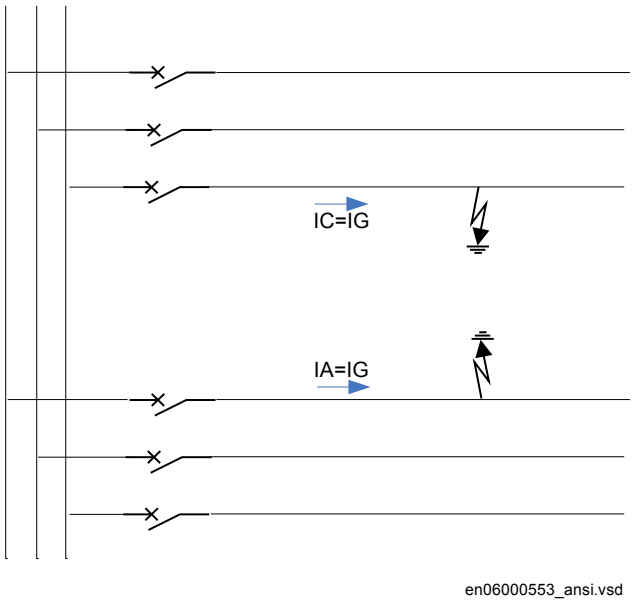

Figure 185: The currents in the phases at a double ground fault

The function has a block input (BLOCK) to block start from the function if required in certain conditions.

3.6.15.2 Setting guidelines

The parameters for the Phase preference logic function PPLPHIZ are set via the local HMI or PCM600.

Phase preference logic function is an intermediate logic between Distance protection zone, quadrilateral characteristic function ZMQPDIS (21) and Phase selection with load encroachment, quadrilateral characteristic function FDPSPDIS (21). Phase selection and zones are set according to normal praxis, including ground-fault loops, although ground-fault loops will only be active during a cross-country fault.

OperMode: The operating mode is selected. Choices includes cyclic or acyclic phase selection in the preferred mode. This setting must be identical for all IEDs in the same galvanic connected network part.

VBase: Base voltage level in kV. The base voltage is used as reference for the voltage setting factors. Normally it is set to the system voltage level (phase to phase).

IBase: Base current level in A. The base current is used as reference for the neutral current setting factor. Normally it is set to the current transformer rated current.

PU27PN: The setting of the phase-to- ground voltage level (phase voltage) which is used by the evaluation logic to verify that a fault exists in the phase. Normally in a high impedance grounded system, the voltage drop is big and the setting can typically be set to 70% of base voltage (*VBase*)

PU27PP: The setting of the phase-to-phase voltage level (line voltage) which is used by the evaluation logic to verify that a fault exists in two or more phases. The voltage must be set to avoid that a partly healthy phase-to-phase voltage, for example, B-C for a A-B fault, picks-up and gives an incorrect release of all loops. The setting can typically be 40 to 50% of rated voltage (*VBase*) divided by √3, that is 40%.

3V0PU: The setting of the residual voltage level (neutral voltage) which is used by the evaluation logic to verify that an ground-fault exists. The setting can typically be 20% of base voltage (*VBase*).

Pickup_N: The setting of the residual current level (neutral current) which is used by the evaluation logic to verify that a cross-country fault exists. The setting can typically be 20% of base current (*IBase*) but the setting shall be above the maximum current generated by the system grounding. Note that the systems are high impedance grounded which means that the ground-fault currents at ground-faults are limited and the occurring IN above this level shows that there exists a two-phase fault on this line and a parallel line where the IN is the fault current level in the faulty phase. A high sensitivity need not to be achieved as the two-phase fault level normally is well above base current.

tIN: The time delay for detecting that the fault is cross-country. Normal time setting is 0.1 - 0.15 s.

tVN: The time delay for a secure VN detecting that the fault is an ground-fault or double ground-fault with residual voltage. Normal time setting is 0.1 - 0.15 s.

tOffVN: The VN voltage has a reset drop-off to ensure correct function without timing problems. Normal time setting is 0.1 s

3.6.15.3 Setting parameters

Table 86: PPLPHIZ Group settings (basic)

Name	Values (Range)	Unit	Step	Default	Description
IBase	1 - 99999	A	1	3000	Base current
VBase	0.05 - 2000.00	kV	0.01	400.00	Base voltage
OperMode	No Filter NoPref 1231c 1321c 123a 132a 213a 231a 312a 321a	-	-	No Filter	Operating mode (c=cyclic,a=acyclic)
PU27PN	10 - 100	%VB	1	70	Operate value of 27P in % of VBase/sqrt(3)
PU27PP	10 - 100	%VB	1	50	Pickup value of line to line undervoltage (% of VBase)
3V0PU	5 - 300	%VB	1	20	Operate value of residual voltage in % VBase/ sqrt(3)
Pickup_N	10 - 200	%IB	1	20	Pickup value of residual current (% of IBase)
tVN	0.000 - 60.000	s	0.001	0.100	Pickup-delay for residual voltage
tOffVN	0.000 - 60.000	s	0.001	0.100	Dropoff-delay for residual voltage
tIN	0.000 - 60.000	s	0.001	0.150	Pickup-delay for residual current

3.7 Current protection

3.7.1 Instantaneous phase overcurrent protection 3-phase output PHPIOC (50)

Function description	IEC 61850 identification	IEC 60617 identification	ANSI/IEEE C37.2 device number
Instantaneous phase overcurrent protection 3-phase output	PHPIOC	*3I>>*	50

3.7.1.1 Application

Long transmission lines often transfer great quantities of electric power from production to consumption areas. The unbalance of the produced and consumed electric power at each end of the transmission line is very large. This means that a fault on the line can easily endanger the stability of a complete system.

The transient stability of a power system depends mostly on three parameters (at constant amount of transmitted electric power):

- The type of the fault. Three-phase faults are the most dangerous, because no power can be transmitted through the fault point during fault conditions.
- The magnitude of the fault current. A high fault current indicates that the decrease of transmitted power is high.
- The total fault clearing time. The phase angles between the EMFs of the generators on both sides of the transmission line increase over the permitted stability limits if the total fault clearing time, which consists of the protection operating time and the breaker opening time, is too long.

The fault current on long transmission lines depends mostly on the fault position and decreases with the distance from the generation point. For this reason the protection must operate very quickly for faults very close to the generation (and relay) point, for which very high fault currents are characteristic.

The instantaneous phase overcurrent protection 3-phase output PHPIOC (50) can operate in 10 ms for faults characterized by very high currents.

3.7.1.2 Setting guidelines

The parameters for instantaneous phase overcurrent protection 3-phase output PHPIOC (50) are set via the local HMI or PCM600.

This protection function must operate only in a selective way. So check all system and transient conditions that could cause its unwanted operation.

Only detailed network studies can determine the operating conditions under which the highest possible fault current is expected on the line. In most cases, this current appears during three-phase fault conditions. But also examine single-phase-to-ground and two-phase-to-ground conditions.

Also study transients that could cause a high increase of the line current for short times. A typical example is a transmission line with a power transformer at the remote end, which can cause high inrush current when connected to the network and can thus also cause the operation of the built-in, instantaneous, overcurrent protection.

IBase: Base current in primary A. This current is used as reference for current setting. If possible to find a suitable value the rated current of the protected object is chosen.

OpModeSel: This parameter can be set to *2 out of 3* or *1 out of 3*. The setting controls the minimum number of phase currents that must be larger than the set operate current *Pickup* for operation. Normally this parameter is set to *1 out of 3*and will thus detect all fault types. If the protection is to be used mainly for multi phase faults, *2 out of 3* should be chosen.

Pickup: Set operate current in % of *IBase*.

MultPU: The operate current can be changed by activation of the binary input MULTPU to the set factor *MultPU*.

Meshed network without parallel line

The following fault calculations have to be done for three-phase, single-phase-to-ground and two-phase-to-ground faults. With reference to figure 186, apply a fault in B and then calculate the current through-fault phase current I_{fB}. The calculation should be done using the minimum source impedance values for Z_A and the maximum source impedance values for Z_B in order to get the maximum through fault current from A to B.

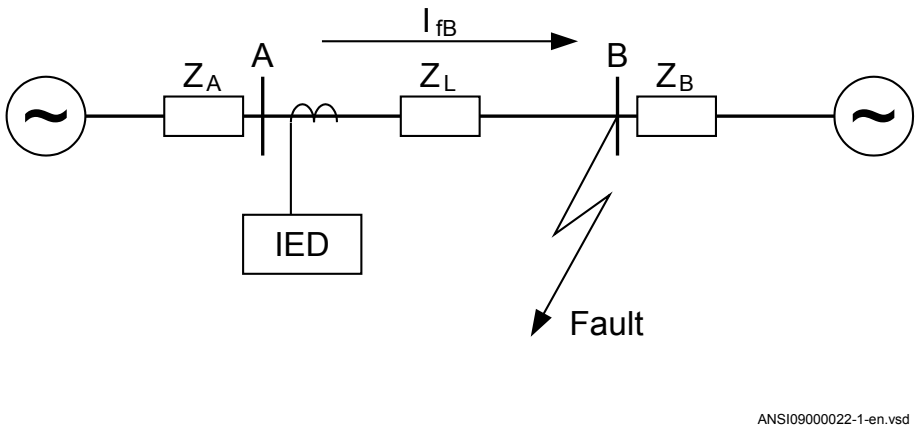

Figure 186: Through fault current from A to B: I_{fB}

Then a fault in A has to be applied and the through fault current I_{fA} has to be calculated, figure 187. In order to get the maximum through fault current, the minimum value for Z_B and the maximum value for Z_A have to be considered.

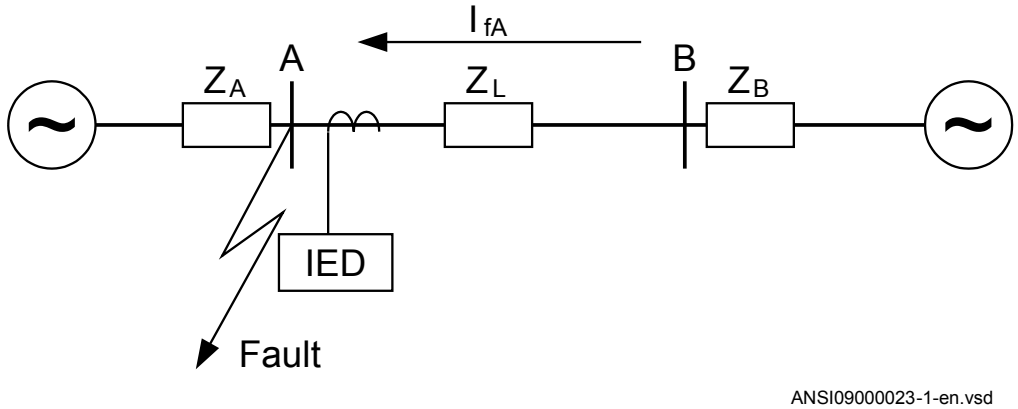

Figure 187: Through fault current from B to A: I_{fA}

The IED must not trip for any of the two through-fault currents. Hence the minimum theoretical current setting (Imin) will be:

$$Imin \geq MAX(I_{fA}, I_{fB})$$

(Equation 329)

A safety margin of 5% for the maximum protection static inaccuracy and a safety margin of 5% for the maximum possible transient overreach have to be introduced. An additional 20% is suggested due to the inaccuracy of the instrument transformers under transient conditions and inaccuracy in the system data.

The minimum primary setting (Is) for the instantaneous phase overcurrent protection 3-phase output is then:

$$Is \geq 1.3.Imin$$

(Equation 330)

The protection function can be used for the specific application only if this setting value is equal to or less than the maximum fault current that the IED has to clear, I_F in figure 188.

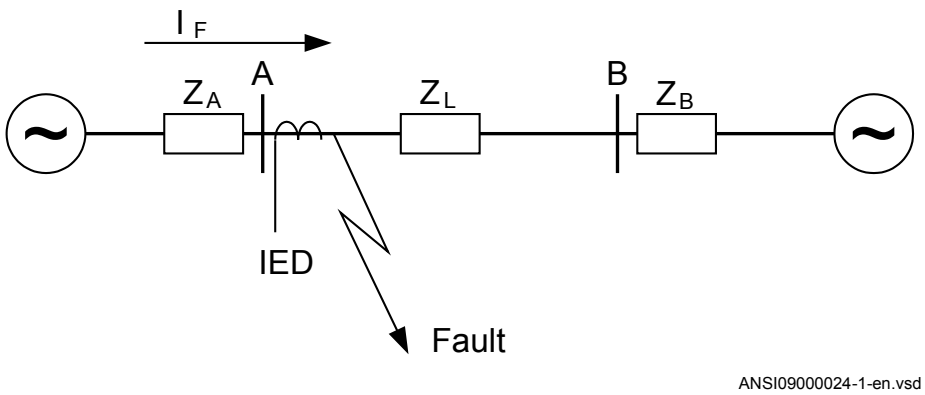

Figure 188: Fault current: I_F

The IED setting value *Pickup* is given in percentage of the primary base current value, *IBase*. The value for *Pickup* is given from this formula:

$$Pickup = \frac{Is}{IBase} \cdot 100$$

(Equation 331)

Meshed network with parallel line

In case of parallel lines, the influence of the induced current from the parallel line to the protected line has to be considered. One example is given in figure 189 where the two lines are connected to the same busbars. In this case the influence of the induced fault current from the faulty line (line 1) to the healthy line (line 2) is considered together with the two through fault currents I_{fA} and I_{fB} mentioned previously. The maximal influence from the parallel line for the IED in figure 189 will be with a fault at the C point with the C breaker open.

A fault in C has to be applied, and then the maximum current seen from the IED (I_M) on the healthy line (this applies for single-phase-to-ground and two-phase-to-ground faults) is calculated.

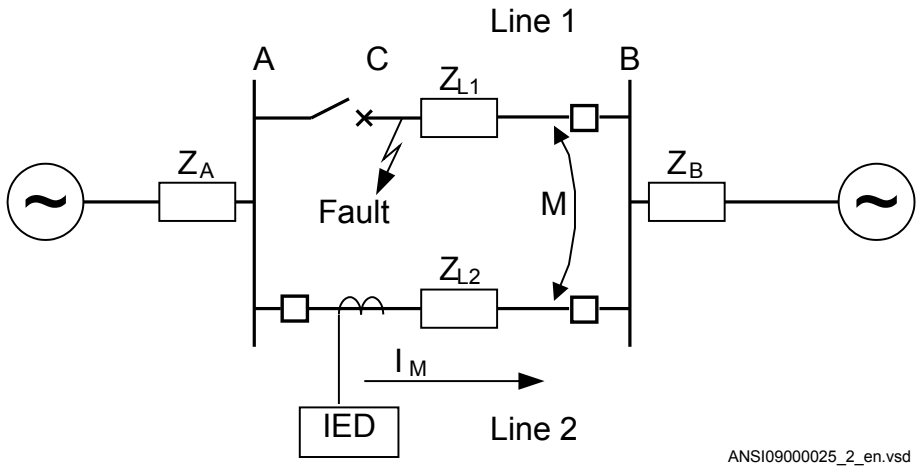

Figure 189: Two parallel lines. Influence from parallel line to the through fault current: I_M

The minimum theoretical current setting for the overcurrent protection function (Imin) will be:

$$Imin \geq MAX(I_{fA}, I_{fB}, I_M)$$

(Equation 332)

Where I_{fA} and I_{fB} have been described in the previous paragraph. Considering the safety margins mentioned previously, the minimum setting (Is) for the instantaneous phase overcurrent protection 3-phase output is then:

$$Is \geq 1.3 \cdot Imin$$

(Equation 333)

The protection function can be used for the specific application only if this setting value is equal or less than the maximum phase fault current that the IED has to clear.

The IED setting value *Pickup* is given in percentage of the primary base current value, *IBase*. The value for *Pickup* is given from this formula:

$$Pickup = \frac{Is}{IBase} \cdot 100$$

(Equation 334)

3.7.1.3 Setting parameters

Table 87: PHPIOC (50) Group settings (basic)

Name	Values (Range)	Unit	Step	Default	Description
Operation	Disabled Enabled	-	-	Disabled	Disable/Enable Operation
IBase	1 - 99999	A	1	3000	Base current
OpModeSel	2 out of 3 1 out of 3	-	-	1 out of 3	Select operation mode (2 of 3 / 1 of 3)
Pickup	1 - 2500	%IB	1	200	Phase current pickup in % of IBase

Table 88: PHPIOC (50) Group settings (advanced)

Name	Values (Range)	Unit	Step	Default	Description
MultPU	0.5 - 5.0	-	0.1	1.0	Multiplier for operate current level

3.7.2 Four step phase overcurrent protection OC4PTOC (51/67)

Function description	IEC 61850 identification	IEC 60617 identification	ANSI/IEEE C37.2 device number
Four step phase overcurrent protection	OC4PTOC	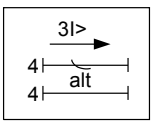	51/67

3.7.2.1 Application

The Four step phase overcurrent protection 3-phase output OC4PTOC (51_67) is used in several applications in the power system. Some applications are:

- Short circuit protection of feeders in distribution and subtransmission systems. Normally these feeders have radial structure.
- Back-up short circuit protection of transmission lines.
- Back-up short circuit protection of power transformers.
- Short circuit protection of different kinds of equipment connected to the power system such as; shunt capacitor banks, shunt reactors, motors and others.
- Back-up short circuit protection of power generators.

If VT inputs are not available or not connected, setting parameter *DirModeSelx* (*x* = step 1, 2, 3 or 4) shall be left to default value *Non-directional*.

In many applications several steps with different current pick up levels and time delays are needed. OC4PTOC (51_67) can have up to four different, individual settable, steps. The flexibility of each step of OC4PTOC (51_67) is great. The following options are possible:

Non-directional / Directional function: In most applications the non-directional functionality is used. This is mostly the case when no fault current can be fed from the protected object itself. In order to achieve both selectivity and fast fault clearance, the directional function can be necessary.

Choice of delay time characteristics: There are several types of delay time characteristics available such as definite time delay and different types of inverse time delay characteristics. The selectivity between different overcurrent protections is normally enabled by co-ordination between the function time delays of the different protections. To enable optimal co-ordination between all overcurrent protections, they should have the same time delay characteristic. Therefore a wide range of standardized inverse time characteristics are available: IEC and ANSI. It is also possible to tailor make the inverse time characteristic.

Normally it is required that the phase overcurrent protection shall reset as fast as possible when the current level gets lower than the operation level. In some cases some sort of delayed reset is required. Therefore different kinds of reset characteristics can be used.

For some protection applications there can be a need to change the current pick-up level for some time. A typical case is when the protection will measure the current to a large motor. At the start up sequence of a motor the start current can be significantly larger than the rated current of the motor. Therefore there is a possibility to give a setting of a multiplication factor to the current pick-up level. This multiplication factor is activated from a binary input signal to the function.

Power transformers can have a large inrush current, when being energized. This phenomenon is due to saturation of the transformer magnetic core during parts of the period. There is a risk that inrush current will reach levels above the pick-up current of the phase overcurrent protection. The inrush current has a large 2nd harmonic content. This can be used to avoid unwanted operation of the protection. Therefore, OC4PTOC (51/67) have a possibility of 2nd harmonic restrain if the level of this harmonic current reaches a value above a set percentage of the fundamental current.

The phase overcurrent protection is often used as protection for two and three phase short circuits. In some cases it is not wanted to detect single-phase ground faults by the phase overcurrent protection. This fault type is detected and cleared after operation of

ground fault protection. Therefore it is possible to make a choice how many phases, at minimum, that have to have current above the pick-up level, to enable operation. If set *1 of 3* it is sufficient to have high current in one phase only. If set *2 of 3* or *3 of 3* single-phase ground faults are not detected.

3.7.2.2 Setting guidelines

When inverse time overcurrent characteristic is selected, the operate time of the stage will be the sum of the inverse time delay and the set definite time delay. Thus, if only the inverse time delay is required, it is of utmost importance to set the definite time delay for that stage to zero.

The parameters for Four step phase overcurrent protection 3-phase output OC4PTOC (51/67) are set via the local HMI or PCM600.

The following settings can be done for OC4PTOC (51/67).

MeasType: Selection of discrete Fourier filtered (*DFT*) or true RMS filtered (*RMS*) signals. *RMS* is used when the harmonic contents are to be considered, for example in applications with shunt capacitors.

Operation: The protection can be set to *Disabled* or *Enabled*

IBase: Base current in primary A. This current is used as reference for current setting. It can be suitable to set this parameter to the rated primary current of the current of the protected object.

VBase: Base voltage level in kV. This voltage is give as a phase-to-phase voltage and this is the reference for voltage related settings of the function. Normally the setting should be chosen to the rated phase-to-phase voltage of the voltage transformer feeding the protection IED.

AngleRCA: Protection characteristic angle set in degrees. If the angle of the fault loop current has the angle RCA the direction to fault is forward.

AngleROA: Angle value, given in degrees, to define the angle sector of the directional function, see figure 190.

PUMinOpPhSel: Minimum current for phase selection set in % of *IBase*. This setting should be less than the lowest step setting. Default setting is 7%.

NumPhSel: Number of phases, with high current, required for operation. The setting possibilities are: *Not used*,*1 out of 3*, *2 out of 3* and *3 out of 3*. Default setting is *1 out of 3*.

2ndHarmStab: Operate level of 2nd harmonic current restrain set in % of the fundamental current. The setting range is *5 - 100*% in steps of 1%. Default setting is 20%.

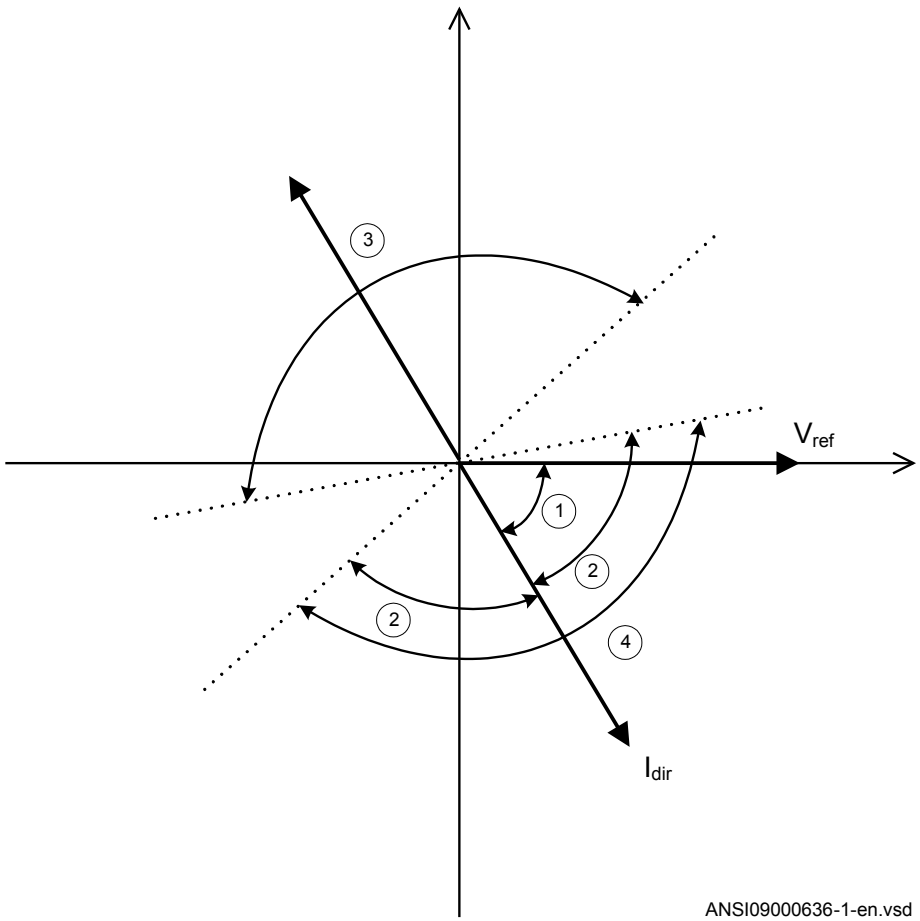

Figure 190: Directional function characteristic

1. RCA = Relay characteristic angle
2. ROA = Relay operating angle
3. Reverse
4. Forward

Settings for each step

x means step 1, 2, 3 and 4.

DirModeSelx: The directional mode of step *x*. Possible settings are *Disabled*/*Non-directional*/*Forward*/*Reverse*.

Characteristx: Selection of time characteristic for step *x*. Definite time delay and different types of inverse time characteristics are available according to table 89.

Table 89: Inverse time characteristics

Curve name
ANSI Extremely Inverse
ANSI Very Inverse
ANSI Normal Inverse
ANSI Moderately Inverse
ANSI/IEEE Definite time
ANSI Long Time Extremely Inverse
ANSI Long Time Very Inverse
ANSI Long Time Inverse
IEC Normal Inverse
IEC Very Inverse
IEC Inverse
IEC Extremely Inverse
IEC Short Time Inverse
IEC Long Time Inverse
IEC Definite Time
User Programmable
ASEA RI
RXIDG (logarithmic)

The different characteristics are described in Technical reference manual.

Pickupx: Operate phase current level for step *x* given in % of *IBase*.

tx: Definite time delay for step *x*. Used if definite time characteristic is chosen.

TDx: Time multiplier for inverse time delay for step *x*.

IMinx: Minimum operate current for step *x* in % of *IBase*. Set *IMinx* below *Pickupx* for every step to achieve ANSI reset characteristic according to standard. If *IMinx* is set above *Pickupx* for any step the ANSI reset works as if current is zero when current drops below *IMinx*.

MultPUx: Multiplier for scaling of the current setting value. If a binary input signal (enableMultiplier) is activated the current operation level is increase by this setting constant. Setting range: 1.0-10.0

txMin: Minimum operate time for all inverse time characteristics. At high currents the inverse time characteristic might give a very short operation time. By setting this parameter the operation time of the step can never be shorter than the setting. Setting range: 0.000 - 60.000s in steps of 0.001s.

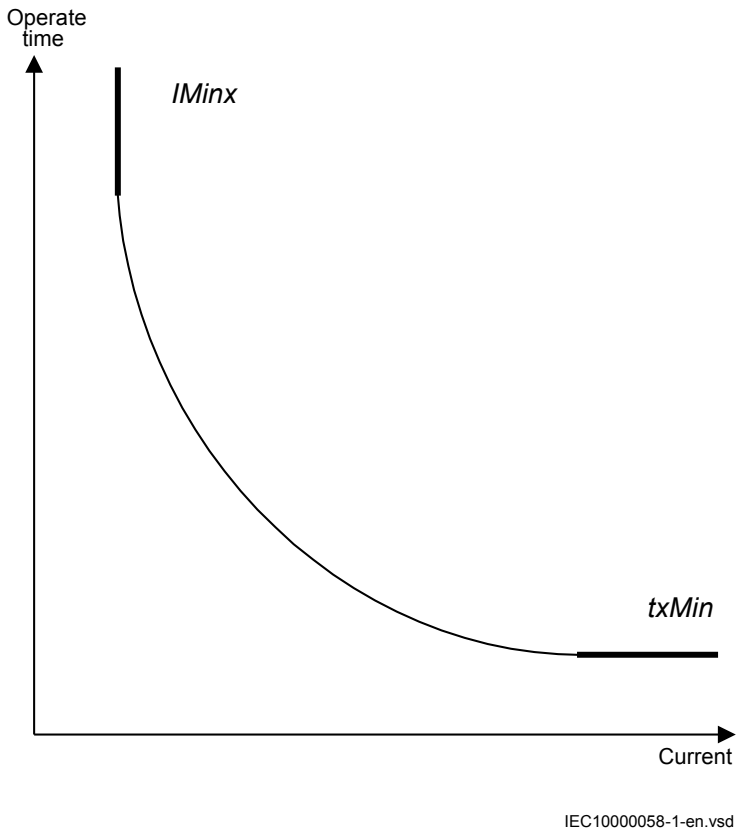

Figure 191: Minimum operate current and operation time for inverse time characteristics

In order to fully comply with curves definition setting parameter *txMin* shall be set to the value, which is equal to the operating time of the selected inverse curve for measured current of twenty times the set current pickup value. Note that the operating time value is dependent on the selected setting value for time multiplier *kx*.

ResetTypeCrvx: The reset of the delay timer can be made in different ways. By choosing setting the possibilities are according to table 90.

Table 90: Reset possibilities

Curve name	Curve index no.
Instantaneous	1
IEC Reset (constant time)	2
ANSI Reset (inverse time)	3

The delay characteristics are described in the technical reference manual. There are some restrictions regarding the choice of reset delay.

For the definite time delay characteristics the possible delay time settings are instantaneous (1) and IEC (2 = set constant time reset).

For ANSI inverse time characteristics all three types of reset time characteristics are available; instantaneous (1), IEC (2 = set constant time reset) and ANSI (3 = current dependent reset time).

For IEC inverse time characteristics the possible delay time settings are instantaneous (1) and IEC (2 = set constant time reset).

For the customer tailor made inverse time delay characteristics (type 17) all three types of reset time characteristics are available; instantaneous (1), IEC (2 = set constant time reset) and ANSI (3 = current dependent reset time). If the current dependent type is used settings pr, tr and cr must be given.

HarmRestrainx: Enable block of step *x* from the harmonic restrain function (2nd harmonic). This function should be used when there is a risk if power transformer inrush currents might cause unwanted trip. Can be set *Disabled*/*Enabled*.

tPCrvx, *tACrvx*, *tBCrvx*, *tCCrvx*: Parameters for customer creation of inverse time characteristic curve (Curve type = 17). See equation 335 for the time characteristic equation.

$$t[s] = \left(\frac{A}{\left(\frac{i}{in>}\right)^{p} - C} + B \right) \cdot MultPUx$$

(Equation 335)

For more information, refer to the technical reference manual.

tPRCrvx, *tTRCrvx*, *tCRCrvx*: Parameters for customer creation of inverse reset time characteristic curve (Reset Curve type = 3). Further description can be found in the technical reference manual.

2nd harmonic restrain

If a power transformer is energized there is a risk that the transformer core will saturate during part of the period, resulting in an inrush transformer current. This will give a declining residual current in the network, as the inrush current is deviating between the phases. There is a risk that the phase overcurrent function will give an unwanted trip. The inrush current has a relatively large ratio of 2nd harmonic component. This component can be used to create a restrain signal to prevent this unwanted function.

The settings for the 2nd harmonic restrain are described below.

2ndHarmStab: The rate of 2nd harmonic current content for activation of the 2nd harmonic restrain signal, to block chosen steps. The setting is given in % of the fundamental frequency residual current. The setting range is *5* - *100*% in steps of 1%. The default setting is 20% and can be used if a deeper investigation shows that no other value is needed..

HarmRestrainx: This parameter can be set *Disabled*/*Enabled*, to disable or enable the 2nd harmonic restrain.

The four step phase overcurrent protection 3-phase output can be used in different ways, depending on the application where the protection is used. A general description is given below.

The pickup current setting inverse time protection or the lowest current step constant inverse time protection must be given a current setting so that the highest possible load current does not cause protection operation. Here consideration also has to be taken to the protection reset current, so that a short peak of overcurrent does not cause operation of the protection even when the overcurrent has ceased. This phenomenon is described in figure 192.

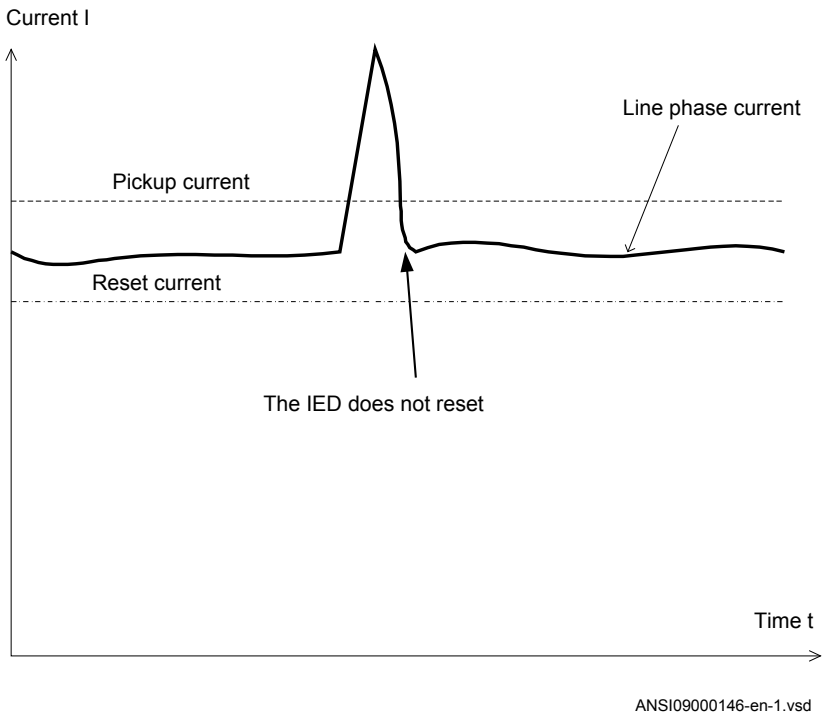

Figure 192: Pickup and reset current for an overcurrent protection

The lowest setting value can be written according to equation 336.

$$Ipu \geq 1.2 \cdot \frac{Imax}{k}$$

(Equation 336)

where:

1.2	is a safety factor,
k	is the resetting ratio of the protection
Imax	is the maximum load current.

From operation statistics the load current up to the present situation can be found. The current setting must be valid also for some years ahead. It is, in most cases, realistic that the setting values are updated not more often than once every five years. In many cases this time interval is still longer. Investigate the maximum load current that different equipment on the line can withstand. Study components such as line conductors, current transformers, circuit breakers, and disconnectors. The manufacturer of the equipment normally gives the maximum thermal load current of the equipment.

The maximum load current on the line has to be estimated. There is also a demand that all faults, within the zone that the protection shall cover, must be detected by the phase overcurrent protection. The minimum fault current Iscmin, to be detected by the protection, must be calculated. Taking this value as a base, the highest pick up current setting can be written according to equation 337.

$$\mathrm{Ipu} \le 0.7 \cdot \mathrm{Isc\,min}$$

(Equation 337)

where:

0.7	is a safety factor
Iscmin	is the smallest fault current to be detected by the overcurrent protection.

As a summary the pickup current shall be chosen within the interval stated in equation 338.

$$1.2 \cdot \frac{\mathrm{Im\,ax}}{\mathrm{k}} \le \mathrm{Ipu} \le 0.7 \cdot \mathrm{Isc\,min}$$

(Equation 338)

The high current function of the overcurrent protection, which only has a short delay of the operation, must be given a current setting so that the protection is selective to other protection in the power system. It is desirable to have a rapid tripping of faults within as large portion as possible of the part of the power system to be protected by the protection (primary protected zone). A fault current calculation gives the largest current of faults, Iscmax, at the most remote part of the primary protected zone. Considerations have to be made to the risk of transient overreach, due to a possible DC component of the short circuit current. The lowest current setting of the most rapid stage, of the phase overcurrent protection, can be written according to

$$I_{high} \ge 1.2 \cdot k_t \cdot I_{sc\max}$$

(Equation 339)

where:

1.2	is a safety factor,
k_t	is a factor that takes care of the transient overreach due to the DC component of the fault current and can be considered to be less than 1.1
Iscmax	is the largest fault current at a fault at the most remote point of the primary protection zone.

The operate times of the phase overcurrent protection has to be chosen so that the fault time is so short that protected equipment will not be destroyed due to thermal overload, at the same time as selectivity is assured. For overcurrent protection, in a radial fed network, the time setting can be chosen in a graphical way. This is mostly used in the case of inverse time overcurrent protection. Figure 193 shows how the time-versus-current curves are plotted in a diagram. The time setting is chosen to get the shortest fault time with maintained selectivity. Selectivity is assured if the time difference between the curves is larger than a critical time difference.

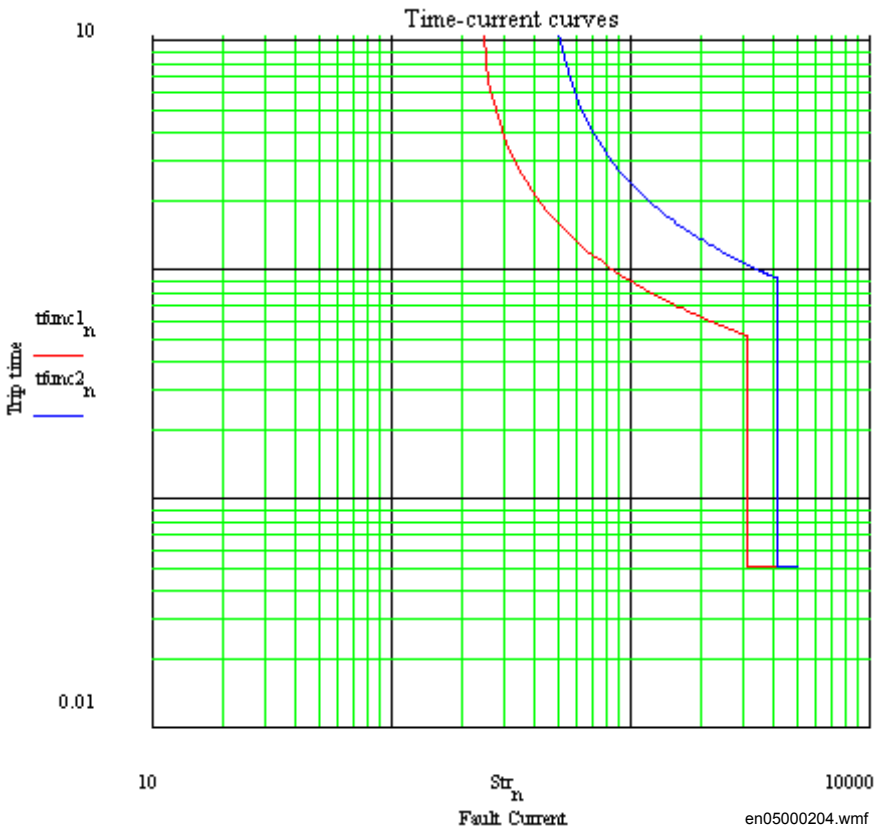

Figure 193: Fault time with maintained selectivity

The operation time can be set individually for each overcurrent protection.

To assure selectivity between different protections, in the radial network, there have to be a minimum time difference Δt between the time delays of two protections. The minimum time difference can be determined for different cases. To determine the shortest possible time difference, the operation time of protections, breaker opening time and protection resetting time must be known. These time delays can vary significantly between different protective equipment. The following time delays can be estimated:

Protection operation time:	15-60 ms
Protection resetting time:	15-60 ms
Breaker opening time:	20-120 ms

Example for time coordination

Assume two substations A and B directly connected to each other via one line, as shown in the figure 194. Consider a fault located at another line from the station B. The fault current to the overcurrent protection of IED B1 has a magnitude so that the protection will have instantaneous function. The overcurrent protection of IED A1 must have a delayed function. The sequence of events during the fault can be described using a time axis, see figure 194.

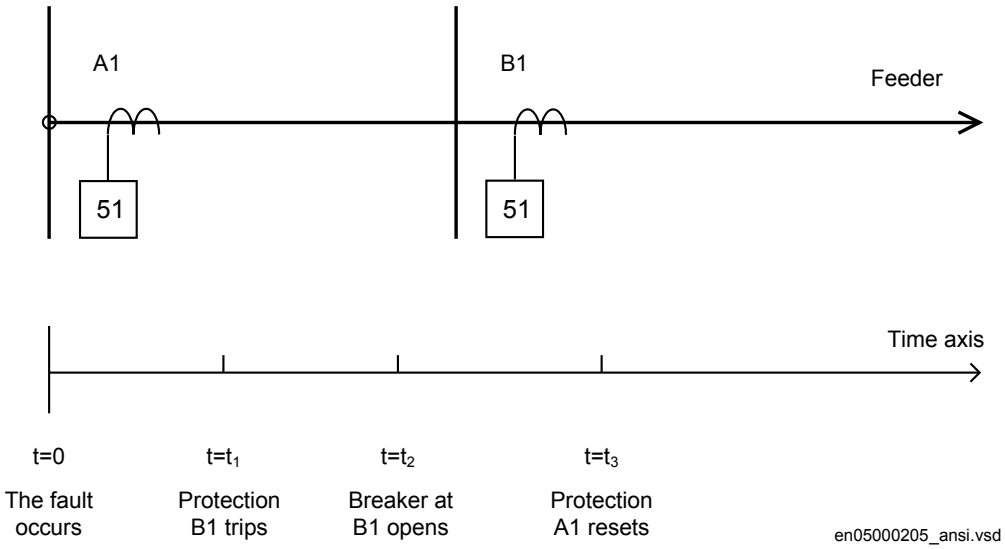

Figure 194: Sequence of events during fault

where:

t=0	is when the fault occurs,
$t=t_1$	is when the trip signal from the overcurrent protection at IED B1 is sent to the circuit breaker. The operation time of this protection is t_1,
$t=t_2$	is when the circuit breaker at IED B1 opens. The circuit breaker opening time is t_2 - t_1 and
$t=t_3$	is when the overcurrent protection at IED A1 resets. The protection resetting time is t_3 - t_2.

To ensure that the overcurrent protection at IED A1, is selective to the overcurrent protection at IED B1, the minimum time difference must be larger than the time t_3.

There are uncertainties in the values of protection operation time, breaker opening time and protection resetting time. Therefore a safety margin has to be included. With normal values the needed time difference can be calculated according to equation 340.

$$\Delta t \geq 40\,ms + 100\,ms + 40\,ms + 40\,ms = 220\,ms$$

(Equation 340)

where it is considered that:

the operate time of overcurrent protection B1	is 40 ms
the breaker open time	is 100 ms
the resetting time of protection A1	is 40 ms and
the additional margin	is 40 ms

3.7.2.3 Setting parameters

Table 91: OC4PTOC (51_67) Group settings (basic)

Name	Values (Range)	Unit	Step	Default	Description
Operation	Disabled Enabled	-	-	Disabled	Disable/Enable Operation
IBase	1 - 99999	A	1	3000	Base current
Vbase	0.05 - 2000.00	kV	0.05	400.00	Base voltage
AngleRCA	40 - 65	Deg	1	55	Relay characteristic angle (RCA)
AngleROA	40 - 89	Deg	1	80	Relay operation angle (ROA)
NumPhSel	1 out of 3 2 out of 3 3 out of 3	-	-	1 out of 3	Number of phases required for phase selection (1 of 3, 2 of 3, 3 of 3)
DirModeSel1	Disabled Non-directional Forward Reverse	-	-	Non-directional	Directional mode of step 1 (Disabled, Nondir, Forward, Reverse)

Table continues on next page

Name	Values (Range)	Unit	Step	Default	Description
Characterist1	ANSI Ext. inv. ANSI Very inv. ANSI Norm. inv. ANSI Mod. inv. ANSI Def. Time L.T.E. inv. L.T.V. inv. L.T. inv. IEC Norm. inv. IEC Very inv. IEC inv. IEC Ext. inv. IEC S.T. inv. IEC L.T. inv. IEC Def. Time Reserved Programmable RI type RD type	-	-	ANSI Def. Time	Selection of time delay curve type for step 1
Pickup1	1 - 2500	%IB	1	1000	Phase current operate level for step1 in % of IBase
t1	0.000 - 60.000	s	0.001	0.000	Definitive time delay of step 1
TD1	0.05 - 999.00	-	0.01	0.05	Time multiplier for the inverse time delay for step 1
IMin1	1 - 10000	%IB	1	100	Minimum operate current for step1in% of IBase
t1Min	0.000 - 60.000	s	0.001	0.000	Minimum operate time for inverse curves for step 1
MultPU1	1.0 - 10.0	-	0.1	2.0	Multiplier for current operate level for step 1
DirModeSel2	Disabled Non-directional Forward Reverse	-	-	Non-directional	Directional mode of step 2 (Disabled, Nondir, Forward, Reverse)
Characterist2	ANSI Ext. inv. ANSI Very inv. ANSI Norm. inv. ANSI Mod. inv. ANSI Def. Time L.T.E. inv. L.T.V. inv. L.T. inv. IEC Norm. inv. IEC Very inv. IEC inv. IEC Ext. inv. IEC S.T. inv. IEC L.T. inv. IEC Def. Time Reserved Programmable RI type RD type	-	-	ANSI Def. Time	Selection of time delay curve type for step 2
Pickup2	1 - 2500	%IB	1	500	Phase current operate level for step2 in % of IBase

Table continues on next page

Name	Values (Range)	Unit	Step	Default	Description
t2	0.000 - 60.000	s	0.001	0.400	Definitive time delay of step 2
TD2	0.05 - 999.00	-	0.01	0.05	Time multiplier for the inverse time delay for step 2
IMin2	1 - 10000	%IB	1	50	Minimum operate current for step2 in % of IBase
t2Min	0.000 - 60.000	s	0.001	0.000	Minimum operate time for inverse curves for step 2
MultPU2	1.0 - 10.0	-	0.1	2.0	Multiplier for current operate level for step 2
DirModeSel3	Disabled Non-directional Forward Reverse	-	-	Non-directional	Directional mode of step 3 (Disabled, Nondir, Forward, Reverse)
Characterist3	ANSI Ext. inv. ANSI Very inv. ANSI Norm. inv. ANSI Mod. inv. ANSI Def. Time L.T.E. inv. L.T.V. inv. L.T. inv. IEC Norm. inv. IEC Very inv. IEC inv. IEC Ext. inv. IEC S.T. inv. IEC L.T. inv. IEC Def. Time Reserved Programmable RI type RD type	-	-	ANSI Def. Time	Selection of time delay curve type for step 3
Pickup3	1 - 2500	%IB	1	250	Phase current operate level for step3 in % of IBase
t3	0.000 - 60.000	s	0.001	0.800	Definitive time delay of step 3
TD3	0.05 - 999.00	-	0.01	0.05	Time multiplier for the inverse time delay for step 3
IMin3	1 - 10000	%IB	1	33	Minimum operate current for step3 in % of IBase
t3Min	0.000 - 60.000	s	0.001	0.000	Minimum operate time for inverse curves for step 3
MultPU3	1.0 - 10.0	-	0.1	2.0	Multiplier for current operate level for step 3
DirModeSel4	Disabled Non-directional Forward Reverse	-	-	Non-directional	Directional mode of step 4 (Disabled, Nondir, Forward, Reverse)

Table continues on next page

Name	Values (Range)	Unit	Step	Default	Description
Characterist4	ANSI Ext. inv. ANSI Very inv. ANSI Norm. inv. ANSI Def. Time L.T.E. inv. L.T.V. inv. L.T. inv. IEC Norm. inv. IEC Very inv. IEC inv. IEC Ext. inv. IEC S.T. inv. IEC L.T. inv. IEC Def. Time Reserved Programmable RI type RD type	-	-	ANSI Def. Time	Selection of time delay curve type for step 4
Pickup4	1 - 2500	%IB	1	175	Phase current operate level for step4 in % of IBase
t4	0.000 - 60.000	s	0.001	2.000	Definitive time delay of step 4
TD4	0.05 - 999.00	-	0.01	0.05	Time multiplier for the inverse time delay for step 4
IMin4	1 - 10000	%IB	1	17	Minimum operate current for step4 in % of IBase
t4Min	0.000 - 60.000	s	0.001	0.000	Minimum operate time for inverse curves for step 4
MultPU4	1.0 - 10.0	-	0.1	2.0	Multiplier for current operate level for step 4

Table 92: OC4PTOC (51_67) Group settings (advanced)

Name	Values (Range)	Unit	Step	Default	Description
PUMinOpPhSel	1 - 100	%IB	1	7	Minimum current for phase selection in % of IBase
2ndHarmStab	5 - 100	%IB	1	20	Pickup of second harm restraint in % of Fundamental
ResetTypeCrv1	Instantaneous IEC Reset ANSI reset	-	-	Instantaneous	Selection of reset curve type for step 1
tReset1	0.000 - 60.000	s	0.001	0.020	Reset time delay used in IEC Definite Time curve step 1
tPCrv1	0.005 - 3.000	-	0.001	1.000	Parameter P for customer programmable curve for step 1
tACrv1	0.005 - 200.000	-	0.001	13.500	Parameter A for customer programmable curve for step 1
tBCrv1	0.00 - 20.00	-	0.01	0.00	Parameter B for customer programmable curve for step 1

Table continues on next page

Name	Values (Range)	Unit	Step	Default	Description
tCCrv1	0.1 - 10.0	-	0.1	1.0	Parameter C for customer programmable curve for step 1
tPRCrv1	0.005 - 3.000	-	0.001	0.500	Parameter PR for customer programmable curve for step 1
tTRCrv1	0.005 - 100.000	-	0.001	13.500	Parameter TR for customer programmable curve for step 1
tCRCrv1	0.1 - 10.0	-	0.1	1.0	Parameter CR for customer programmable curve for step 1
HarmRestrain1	Disabled Enabled	-	-	Disabled	Enable block of step 1 from harmonic restrain
ResetTypeCrv2	Instantaneous IEC Reset ANSI reset	-	-	Instantaneous	Selection of reset curve type for step 2
tReset2	0.000 - 60.000	s	0.001	0.020	Reset time delay used in IEC Definite Time curve step 2
tPCrv2	0.005 - 3.000	-	0.001	1.000	Parameter P for customer programmable curve for step 2
tACrv2	0.005 - 200.000	-	0.001	13.500	Parameter A for customer programmable curve for step 2
tBCrv2	0.00 - 20.00	-	0.01	0.00	Parameter B for customer programmable curve for step 2
tCCrv2	0.1 - 10.0	-	0.1	1.0	Parameter C for customer programmable curve for step 2
tPRCrv2	0.005 - 3.000	-	0.001	0.500	Parameter PR for customer programmable curve for step 2
tTRCrv2	0.005 - 100.000	-	0.001	13.500	Parameter TR for customer programmable curve for step 2
tCRCrv2	0.1 - 10.0	-	0.1	1.0	Parameter CR for customer programmable curve for step 2
HarmRestrain2	Disabled Enabled	-	-	Disabled	Enable block of step 2 from harmonic restrain
ResetTypeCrv3	Instantaneous IEC Reset ANSI reset	-	-	Instantaneous	Selection of reset curve type for step 3
tReset3	0.000 - 60.000	s	0.001	0.020	Reset time delay used in IEC Definite Time curve step 3
tPCrv3	0.005 - 3.000	-	0.001	1.000	Parameter P for customer programmable curve for step 3
tACrv3	0.005 - 200.000	-	0.001	13.500	Parameter A for customer programmable curve for step 3
tBCrv3	0.00 - 20.00	-	0.01	0.00	Parameter B for customer programmable curve for step 3
tCCrv3	0.1 - 10.0	-	0.1	1.0	Parameter C for customer programmable curve for step 3
tPRCrv3	0.005 - 3.000	-	0.001	0.500	Parameter PR for customer programmable curve for step 3

Table continues on next page

Name	Values (Range)	Unit	Step	Default	Description
tTRCrv3	0.005 - 100.000	-	0.001	13.500	Parameter TR for customer programmable curve for step 3
tCRCrv3	0.1 - 10.0	-	0.1	1.0	Parameter CR for customer programmable curve for step 3
HarmRestrain3	Disabled Enabled	-	-	Disabled	Enable block of step3 from harmonic restrain
ResetTypeCrv4	Instantaneous IEC Reset ANSI reset	-	-	Instantaneous	Selection of reset curve type for step 4
tReset4	0.000 - 60.000	s	0.001	0.020	Reset time delay used in IEC Definite Time curve step 4
tPCrv4	0.005 - 3.000	-	0.001	1.000	Parameter P for customer programmable curve for step 4
tACrv4	0.005 - 200.000	-	0.001	13.500	Parameter A for customer programmable curve for step 4
tBCrv4	0.00 - 20.00	-	0.01	0.00	Parameter B for customer programmable curve for step 4
tCCrv4	0.1 - 10.0	-	0.1	1.0	Parameter C for customer programmable curve for step 4
tPRCrv4	0.005 - 3.000	-	0.001	0.500	Parameter PR for customer programmable curve for step 4
tTRCrv4	0.005 - 100.000	-	0.001	13.500	Parameter TR for customer programmable curve for step 4
tCRCrv4	0.1 - 10.0	-	0.1	1.0	Parameter CR for customer programmable curve for step 4
HarmRestrain4	Disabled Enabled	-	-	Disabled	Enable block of step 4 from harmonic restrain

Table 93: OC4PTOC (51_67) Non group settings (basic)

Name	Values (Range)	Unit	Step	Default	Description
MeasType	DFT RMS	-	-	DFT	Selection between DFT and RMS measurement

3.7.3 Instantaneous residual overcurrent protection EFPIOC (50N)

Function description	IEC 61850 identification	IEC 60617 identification	ANSI/IEEE C37.2 device number
Instantaneous residual overcurrent protection	EFPIOC	*IN*>>	50N

3.7.3.1 Application

In many applications, when fault current is limited to a defined value by the object impedance, an instantaneous ground-fault protection can provide fast and selective tripping.

The Instantaneous residual overcurrent EFPIOC (50N), which can operate in 15 ms (50 Hz nominal system frequency) for faults characterized by very high currents, is included in the IED.

3.7.3.2 Setting guidelines

The parameters for the Instantaneous residual overcurrent protection EFPIOC (50N) are set via the local HMI or PCM600.

Some guidelines for the choice of setting parameter for EFPIOC (50N) is given.

The setting of the function is limited to the operate residual current to the protection (*Pickup*).

The basic requirement is to assure selectivity, that is EFPIOC (50N) shall not be allowed to operate for faults at other objects than the protected object (line).

For a normal line in a meshed system single phase-to-ground faults and phase-to-phase-to-ground faults shall be calculated as shown in figure 195 and figure 196. The residual currents ($3I_0$) to the protection are calculated. For a fault at the remote line end this fault current is I_{fB}. In this calculation the operational state with high source impedance Z_A and low source impedance Z_B should be used. For the fault at the home busbar this fault current is I_{fA}. In this calculation the operational state with low source impedance Z_A and high source impedance Z_B should be used.

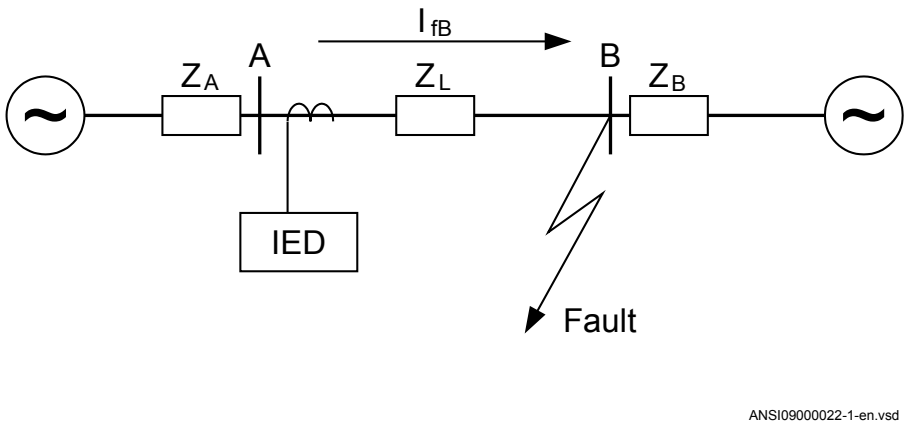

Figure 195: Through fault current from A to B: I_{fB}

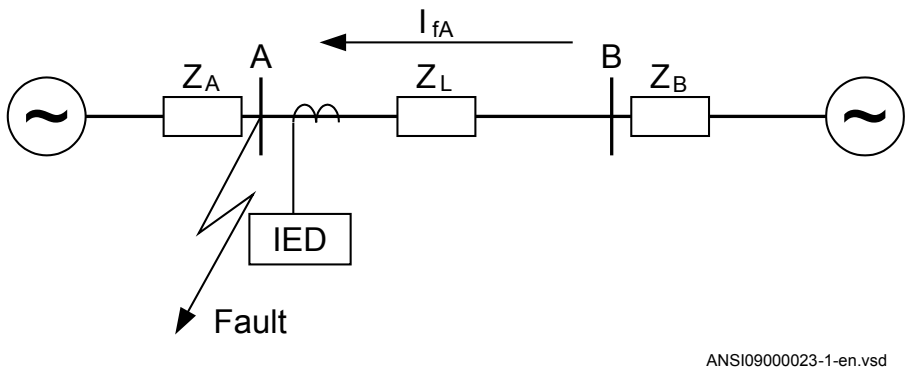

Figure 196: Through fault current from B to A: I_{fA}

The function shall not operate for any of the calculated currents to the protection. The minimum theoretical current setting (Imin) will be:

$$Imin \geq MAX(I_{fA}, I_{fA})$$

(Equation 341)

A safety margin of 5% for the maximum static inaccuracy and a safety margin of 5% for maximum possible transient overreach have to be introduced. An additional 20% is suggested due to inaccuracy of instrument transformers under transient conditions and inaccuracy in the system data.

The minimum primary current setting (Is) is:

$$Is \geq 1.3.Imin$$

(Equation 342)

In case of parallel lines with zero sequence mutual coupling a fault on the parallel line, as shown in figure 197, should be calculated.

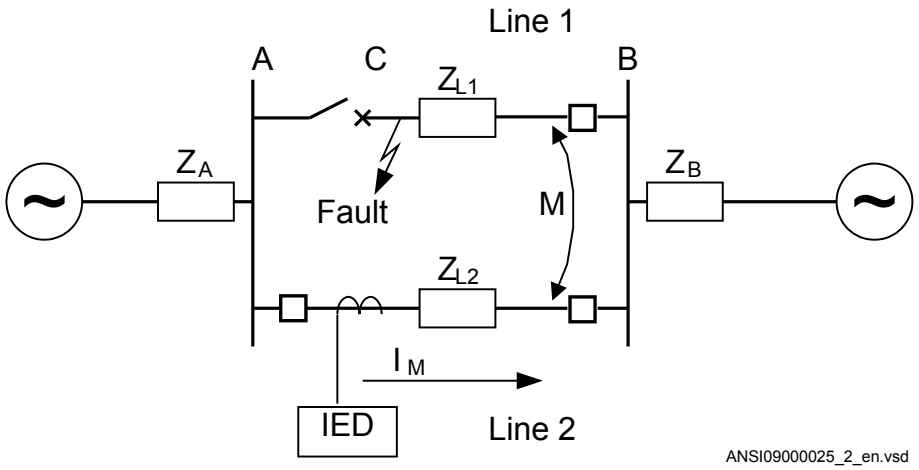

Figure 197: Two parallel lines. Influence from parallel line to the through fault current: I_M

The minimum theoretical current setting (Imin) will in this case be:

$$Imin \geq MAX(I_{fA}, I_{fB}, I_M)$$

(Equation 343)

Where:

I_{fA} and I_{fB} have been described for the single line case.

Considering the safety margins mentioned previously, the minimum setting (Is) is:

$$Is \geq 1.3 \cdot Imin$$

(Equation 344)

Transformer inrush current shall be considered.

The setting of the protection is set as a percentage of the base current (*IBase*).

Operation: set the protection to *Enabled* or *Disabled*.

IBase: Base current in primary A. This current is used as reference for current setting. If possible to find a suitable value the rated current of the protected object is chosen.

Pickup: Set operate current in % of *IBase*.

MultPU: The operate current can be changed by activation of the binary input MULTPU to the set factor *MultPU*.

3.7.3.3 Setting parameters

Table 94: EFPIOC (50N) Group settings (basic)

Name	Values (Range)	Unit	Step	Default	Description
Operation	Disabled Enabled	-	-	Disabled	Disable/Enable Operation
IBase	1 - 99999	A	1	3000	Base current
Pickup	1 - 2500	%IB	1	200	Operate residual current level in % of IBase

Table 95: EFPIOC (50N) Group settings (advanced)

Name	Values (Range)	Unit	Step	Default	Description
MultPU	0.5 - 5.0	-	0.1	1.0	Multiplier for operate current level

3.7.4 Four step residual overcurrent protection, zero, negative sequence direction EF4PTOC (51N/67N)

Function description	IEC 61850 identification	IEC 60617 identification	ANSI/IEEE C37.2 device number
Four step residual overcurrent protection	EF4PTOC	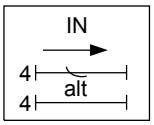	51N/67N

3.7.4.1 Application

The four step residual overcurrent protection EF4PTOC (51N_67N) is used in several applications in the power system. Some applications are:

In many applications several steps with different current pickup levels and time delays are needed. EF4PTOC (51N_67N) can have up to four, individual settable steps. The flexibility of each step of EF4PTOC (51N_67N) is great. The following options are possible:

Non-directional/Directional function: In some applications the non-directional functionality is used. This is mostly the case when no fault current can be fed from the protected object itself. In order to achieve both selectivity and fast fault clearance, the directional function can be necessary. This can be the case for ground-fault protection in meshed and effectively grounded transmission systems. The directional residual overcurrent protection is also well suited to operate in teleprotection communication schemes, which enables fast clearance of ground faults on transmission lines. The

directional function uses the polarizing quantity as decided by setting. Voltage polarizing (-3V_0 is most commonly used, but alternatively current polarizing where currents in transformer neutrals providing the neutral (zero sequence) source (ZN) is used to polarize (IN · ZN) the function. Dual polarizing where the sum of both voltage and current components is allowed to polarize can also be selected.

Choice of time characteristics: There are several types of time characteristics available such as definite time delay and different types of inverse time characteristics. The selectivity between different overcurrent protections is normally enabled by co-ordination between the operate time of the different protections. To enable optimal co-ordination all overcurrent protections, to be co-ordinated against each other, should have the same time characteristic. Therefore a wide range of standardized inverse time characteristics are available: IEC and ANSI.

Table 96: Time characteristics

Curve name
ANSI Extremely Inverse
ANSI Very Inverse
ANSI Normal Inverse
ANSI Moderately Inverse
ANSI/IEEE Definite time
ANSI Long Time Extremely Inverse
ANSI Long Time Very Inverse
ANSI Long Time Inverse
IEC Normal Inverse
IEC Very Inverse
IEC Inverse
IEC Extremely Inverse
IEC Short Time Inverse
IEC Long Time Inverse
IEC Definite Time
User Programmable
ASEA RI
RXIDG (logarithmic)

It is also possible to tailor make the inverse time characteristic.

Normally it is required that EF4PTOC (51N_67N) shall reset as fast as possible when the current level gets lower than the operation level. In some cases some sort of delayed reset is required. Therefore different kinds of reset characteristics can be used.

For some protection applications there can be a need to change the current pickup level for some time. Therefore there is a possibility to give a setting of a multiplication factor *INxMult* to the residual current pick-up level. This multiplication factor is activated from a binary input signal MULTPUx to the function.

Power transformers can have a large inrush current, when being energized. This inrush current can have residual current components. The phenomenon is due to saturation of the transformer magnetic core during parts of the cycle. There is a risk that inrush current will give a residual current that reaches level above the pickup current of the residual overcurrent protection. The inrush current has a large second harmonic content. This can be used to avoid unwanted operation of the protection. Therefore, EF4PTOC (51N_67N) has a possibility of second harmonic restrain *2ndHarmStab* if the level of this harmonic current reaches a value above a set percentage of the fundamental current.

3.7.4.2 Setting guidelines

When inverse time overcurrent characteristic is selected, the operate time of the stage will be the sum of the inverse time delay and the set definite time delay. Thus, if only the inverse time delay is required, it is of utmost importance to set the definite time delay for that stage to zero.

The parameters for the four step residual overcurrent protection, zero or negative sequence direction EF4PTOC (51N/67N) are set via the local HMI or PCM600.

The following settings can be done for the four step residual overcurrent protection.

Operation: Sets the protection to *Enabled* or *Disabled*.

IBase: Base current in primary A. This current is used as reference for current setting. It can be suitable to set this parameter to the rated primary current of the current transformer where the current measurement is made.

VBase: Base voltage level in kV. This voltage is given as a phase-to-phase voltage and this is the reference for voltage related settings of the function. The residual voltage is used as reference voltage for the directional function. Normally the setting should be chosen to the rated phase-to-phase voltage of the voltage transformer feeding the protection IED.

Settings for each step (x = 1, 2, 3 and 4)

DirModeSelx: The directional mode of step *x*. Possible settings are *Disabled*/*Non-directional*/*Forward*/*Reverse*.

Characteristx: Selection of time characteristic for step *x*. Definite time delay and different types of inverse time characteristics are available.

Inverse time characteristic enables fast fault clearance of high current faults at the same time as selectivity to other inverse time phase overcurrent protections can be assured. This is mainly used in radial fed networks but can also be used in meshed networks. In meshed networks the settings must be based on network fault calculations.

To assure selectivity between different protections, in the radial network, there have to be a minimum time difference Δt between the time delays of two protections. The minimum time difference can be determined for different cases. To determine the shortest possible time difference, the operation time of protections, breaker opening time and protection resetting time must be known. These time delays can vary significantly between different protective equipment. The following time delays can be estimated:

Protection operate time:	15-60 ms
Protection resetting time:	15-60 ms
Breaker opening time:	20-120 ms

The different characteristics are described in the technical reference manual.

Pickup"x": Operate residual current level for step *x* given in % of *IBase*.

kx: Time multiplier for the dependent (inverse) characteristic for step *x*.

IMinx: Minimum operate current for step *x* in % of *IBase*. Set *IMinx* below *Pickupx* for every step to achieve ANSI reset characteristic according to standard. If *IMinx* is set above *Pickupx* for any step the ANSI reset works as if current is zero when current drops below *IMinx*.

INxMult: Multiplier for scaling of the current setting value. If a binary input signal (MULTPUx) is activated the current operation level is increased by this setting constant.

txMin: Minimum operating time for inverse time characteristics. At high currents the inverse time characteristic might give a very short operation time. By setting this parameter the operation time of the step can never be shorter than the setting.

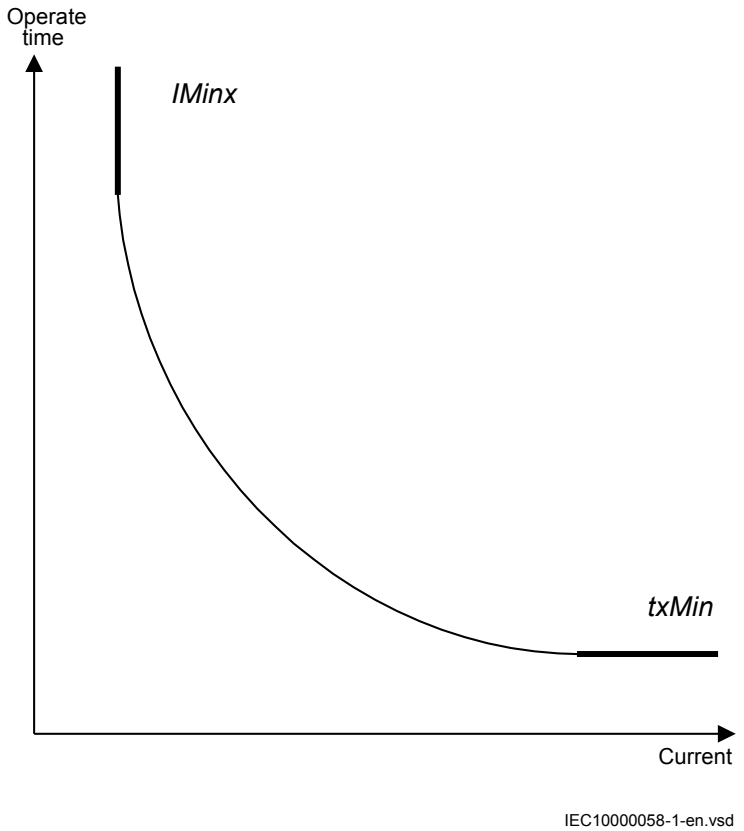

Figure 198: Minimum operate current and operate time for inverse time characteristics

In order to fully comply with curves definition the setting parameter *txMin* shall be set to the value which is equal to the operate time of the selected IEC inverse curve for measured current of twenty times the set current pickup value. Note that the operate time value is dependent on the selected setting value for time multiplier *kx*.

ResetTypeCrvx: The reset of the delay timer can be made in different ways. The possibilities are described in the technical reference manual.

tPCrvx, tACrvx, tBCrvx, tCCrvx: Parameters for user programmable of inverse time characteristic curve. The time characteristic equation is according to equation 345:

$$t[s] = \left(\frac{A}{\left(\frac{i}{ipickup} \right)^{p} - C} + B \right) \cdot TD$$

(Equation 345)

Further description can be found in the technical reference manual.

tPRCrvx, tTRCrvx, tCRCrvx: Parameters for user programmable of inverse reset time characteristic curve. Further description can be found in the technical reference manual.

Common settings for all steps

tx: Definite time delay for step *x*. Used if definite time characteristic is chosen.

AngleRCA: Relay characteristic angle given in degree. This angle is defined as shown in figure 199. The angle is defined positive when the residual current lags the reference voltage (Vpol = $3V_0$ or V_2)

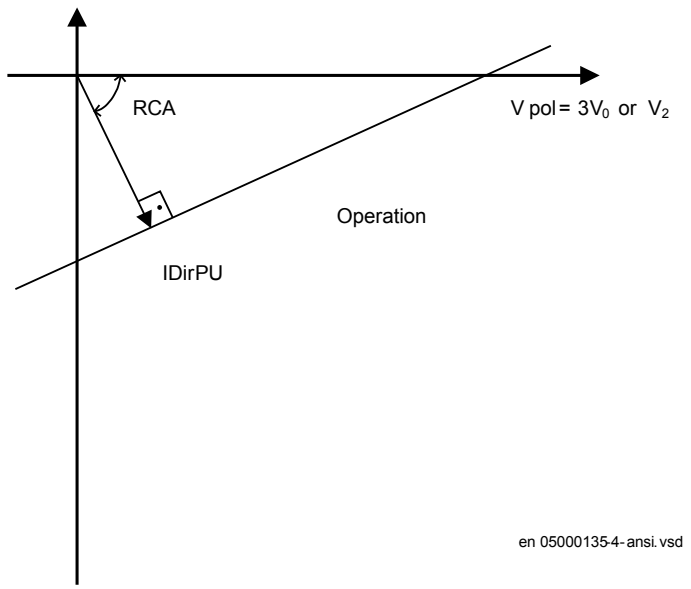

Figure 199: Relay characteristic angle given in degree

In a normal transmission network a normal value of RCA is about 65°. The setting range is -180° to +180°.

polMethod: Defines if the directional polarization is from

- *Voltage* ($3V_0$ or V_2)
- *Current* ($3I_0 \cdot$ ZNpol or $3I_2 \cdot$ZNpol where ZNpol is RNpol + jXNpol), or
- both currents and voltage, *Dual* (dual polarizing, ($3V_0 + 3I_0 \cdot$ ZNpol) or ($V_2 + I_2 \cdot$ ZNpol)).

Normally voltage polarizing from the internally calculated residual sum or an external open delta is used.

Current polarizing is useful when the local source is strong and a high sensitivity is required. In such cases the polarizing voltage ($3V_0$) can be below 1% and it is then necessary to use current polarizing or dual polarizing. Multiply the required set current (primary) with the minimum impedance (ZNpol) and check that the percentage of the phase-to-ground voltage is definitely higher than 1% (minimum $3V_0$>*VPolMin* setting) as a verification.

RNPol, XNPol: The zero-sequence source is set in primary ohms as base for the current polarizing. The polarizing voltage is then achieved as $3I_0 \cdot$ ZNpol. The ZNpol can be defined as $(ZS_1\text{-}ZS_0)/3$, that is the ground return impedance of the source behind the protection. The maximum ground-fault current at the local source can be used to calculate the value of ZN as $V/(\sqrt{3} \cdot 3I_0)$ Typically, the minimum ZNPol (3 · zero sequence source) is set. Setting is in primary ohms.

When the dual polarizing method is used it is important that the setting*Pickupx*or the product $3I_0 \cdot$ ZNpol is not greater than $3V_0$. If so, there is a risk for incorrect operation for faults in the reverse direction.

IPolMin: is the minimum ground-fault current accepted for directional evaluation. For smaller currents than this value the operation will be blocked. Typical setting is 5-10% of *IBase*.

VPolMin: Minimum polarization (reference) residual voltage for the directional function, given in % of *VBase*/√3.

IDirPU: Operate residual current release level in % of *IBase* for directional comparison scheme. The setting is given in % of *IBase* and must be set below the lowest *INx*> setting, set for the directional measurement. The output signals, PUFW and PUREV can be used in a teleprotection scheme. The appropriate signal should be configured to the communication scheme block.

2nd harmonic restrain

If a power transformer is energized there is a risk that the current transformer core will saturate during part of the period, resulting in a transformer inrush current. This will give a declining residual current in the network, as the inrush current is deviating between the phases. There is a risk that the residual overcurrent function will give an unwanted trip. The inrush current has a relatively large ratio of 2nd harmonic component. This component can be used to create a restrain signal to prevent this unwanted function.

At current transformer saturation a false residual current can be measured by the protection. Also here the 2nd harmonic restrain can prevent unwanted operation.

2ndHarmStab: The rate of 2nd harmonic current content for activation of the 2nd harmonic restrain signal. The setting is given in % of the fundamental frequency residual current.

HarmRestrainx: Enable block of step *x* from the harmonic restrain function.

Parallel transformer inrush current logic

In case of parallel transformers there is a risk of sympathetic inrush current. If one of the transformers is in operation, and the parallel transformer is switched in, the asymmetric inrush current of the switched in transformer will cause partial saturation of the transformer already in service. This is called transferred saturation. The 2nd harmonic of the inrush currents of the two transformers will be in phase opposition. The summation of the two currents will thus give a small 2nd harmonic current. The residual fundamental current will however be significant. The inrush current of the transformer in service before the parallel transformer energizing, will be a little delayed compared to the first transformer. Therefore we will have high 2nd harmonic current initially. After a short period this current will however be small and the normal 2nd harmonic blocking will reset.

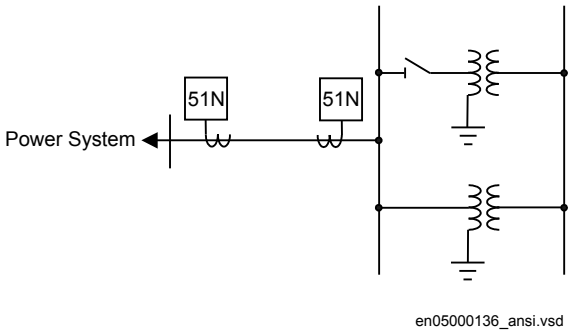

Figure 200: Application for parallel transformer inrush current logic

If the *BlkParTransf* function is activated the 2nd harmonic restrain signal will latch as long as the residual current measured by the relay is larger than a selected step current level. Assume that step 4 is chosen to be the most sensitive step of the four step residual overcurrent protection function EF4PTOC (51N_67N). The harmonic restrain blocking is enabled for this step. Also the same current setting as this step is chosen for the blocking at parallel transformer energizing.

Below the settings for the parallel transformer logic are described.

Use_PUValue: Gives which current level that should be used for activation of the blocking signal. This is given as one of the settings of the steps: Step 1/2/3/4. Normally the step having the lowest operation current level should be set.

BlkParTransf: This parameter can be set *Disable*/*Enable*, the parallel transformer logic.

Switch onto fault logic

In case of energizing a faulty object there is a risk of having a long fault clearance time, if the fault current is too small to give fast operation of the protection. The switch on to fault function can be activated from auxiliary signals from the circuit breaker, either the close command or the open/close position (change of position).

This logic can be used to issue fast trip if one breaker pole does not close properly at a manual or automatic closing.

SOTF and Under Time are similar functions to achieve fast clearance at asymmetrical closing based on requirements from different utilities.

The function is divided into two parts. The SOTF function will give operation from step 2 or 3 during a set time after change in the position of the circuit breaker. The SOTF function has a set time delay. The Under Time function, which has 2nd harmonic restrain blocking, will give operation from step 4. The 2nd harmonic restrain will prevent unwanted function in case of transformer inrush current. The Under Time function has a set time delay.

Below the settings for switch on to fault logics are described.

SOTF operation mode: This parameter can be set: *Disabled/SOTF/Under Time/SOTF +Under Time*.

SOTFSel: This setting will select the signal to activate SOTF function; *CB position open/ CB position closed/CB close command*.

tSOTF: Time delay for operation of the SOTF function. The setting range is 0.000 - 60.000 s in step of 0.001 s. The default setting is 0.100 s

StepForSOTF: If this parameter is set on the step 3 pickup signal will be used as current set level. If set disabled step 2 pickup signal will be used as current set level.

t4U: Time interval when the SOTF function is active after breaker closing. The setting range is 0.000 - 60.000 s in step of 0.001 s. The default setting is 1.000 s.

ActUndrTimeSel: Describes the mode to activate the sensitive undertime function. The function can be activated by Circuit breaker position (change) or Circuit breaker command.

tUnderTime: Time delay for operation of the sensitive undertime function. The setting range is 0.000 - 60.000 s in step of 0.001 s. The default setting is 0.300 s

Line application example

The Four step residual overcurrent protection EF4PTOC (51N/67N) can be used in different ways. Below is described one application possibility to be used in meshed and effectively grounded systems.

The protection measures the residual current out on the protected line. The protection function has a directional function where the residual voltage (zero-sequence voltage) is the polarizing quantity.

The residual voltage and current can be internally generated when a three-phase set of voltage transformers and current transformers are used.

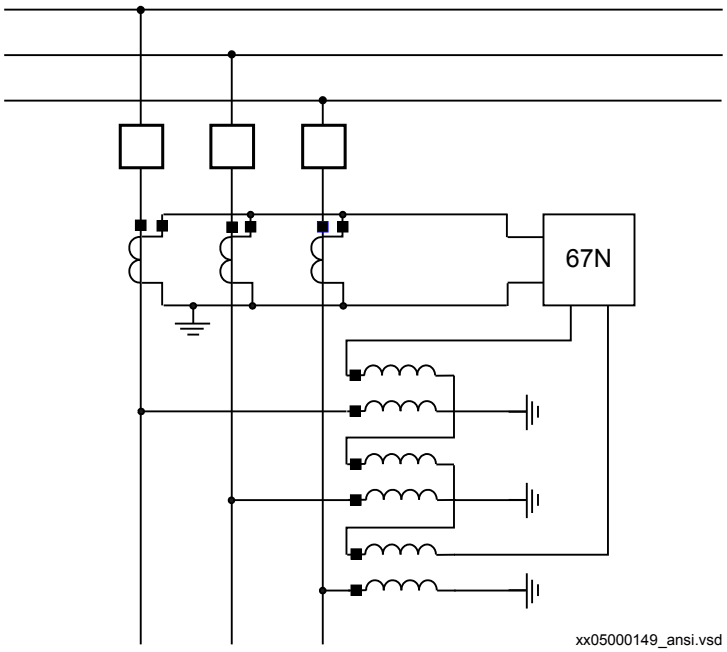

Figure 201: Connection of polarizing voltage from an open (ANSI-broken) delta

The different steps can be described as follows.

Step 1

This step has directional instantaneous function. The requirement is that overreaching of the protected line is not allowed.

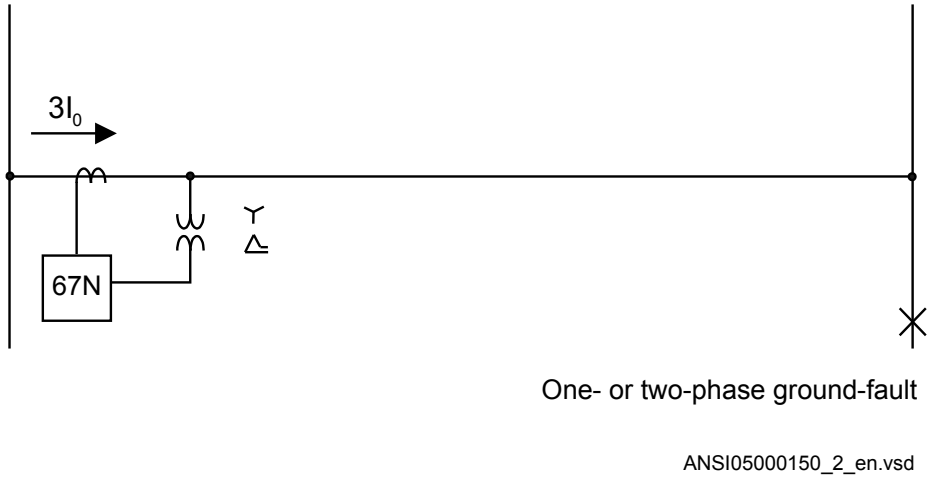

Figure 202: Step 1, first calculation

The residual current out on the line is calculated at a fault on the remote busbar (one- or two-phase-to-ground fault). To assure selectivity it is required that step 1 shall not give a trip at this fault. The requirement can be formulated according to equation 346.

$$I_{step1} \geq 1.2 \cdot 3I_0 \text{ (remote busbar)}$$

(Equation 346)

As a consequence of the distribution of zero sequence current in the power system, the current to the protection might be larger if one line out from the remote busbar is taken out of service, see figure 203.

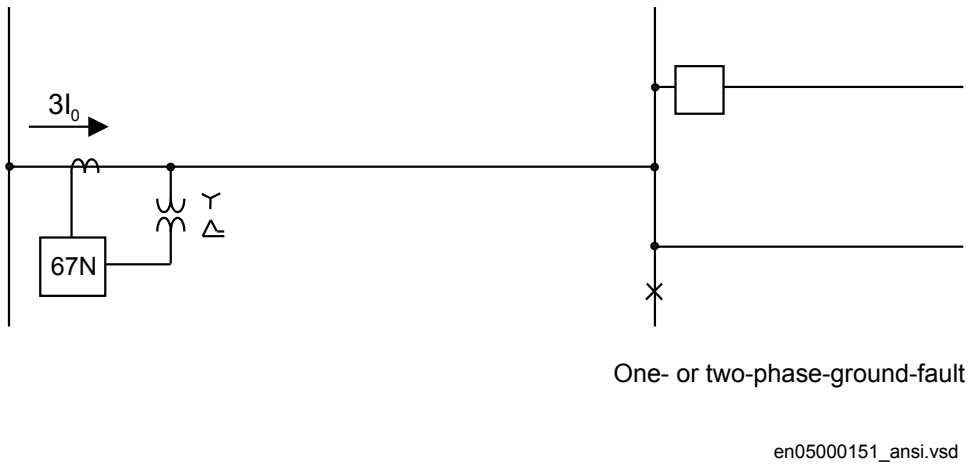

Figure 203: Step 1, second calculation. Remote busbar with, one line taken out of service

The requirement is now according to equation 347.

$$I_{step1} \geq 1.2 \cdot 3I_0 \text{ (remote busbar with one line out)}$$

(Equation 347)

A higher value of step 1 might be necessary if a big power transformer (Y0/D) at remote bus bar is disconnected.

A special case occurs at double circuit lines, with mutual zero-sequence impedance between the parallel lines, see figure 204.

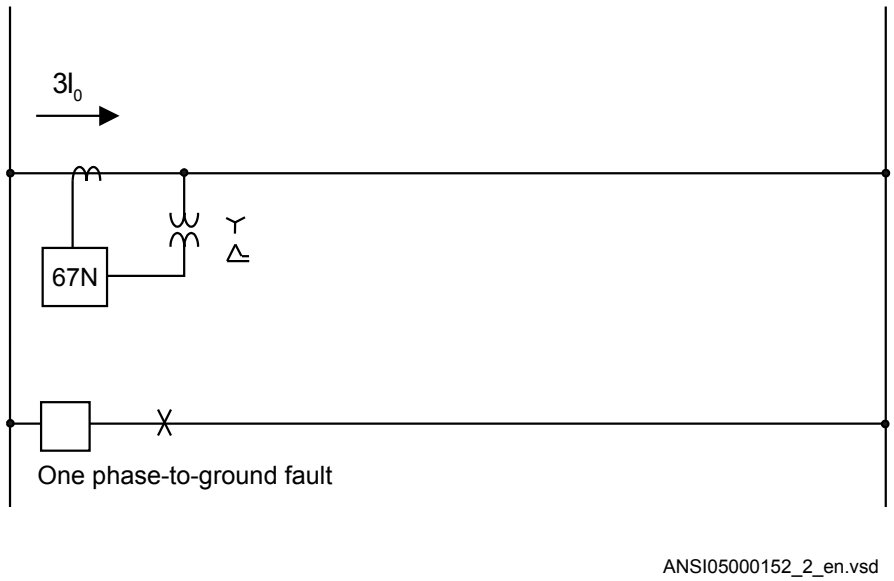

Figure 204: Step 1, third calculation

In this case the residual current out on the line can be larger than in the case of ground fault on the remote busbar.

$$I_{step1} \geq 1.2 \cdot 3I_0$$

(Equation 348)

The current setting for step 1 is chosen as the largest of the above calculated residual currents, measured by the protection.

Step 2

This step has directional function and a short time delay, often about 0.4 s. Step 2 shall securely detect all ground faults on the line, not detected by step 1.

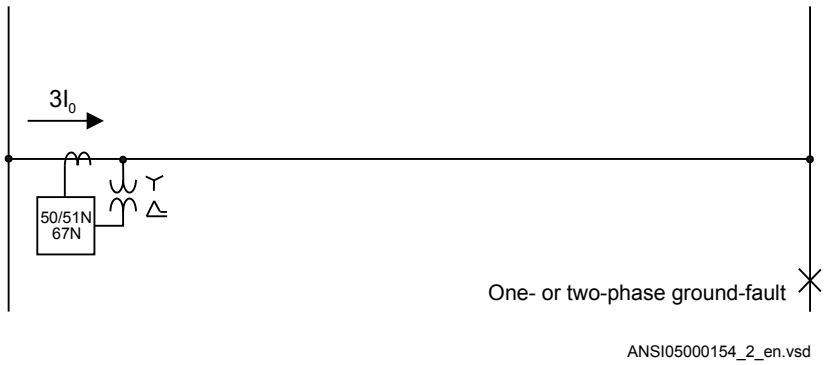

Figure 205: Step 2, check of reach calculation

The residual current, out on the line, is calculated at an operational case with minimal ground-fault current. The requirement that the whole line shall be covered by step 2 can be formulated according to equation 349.

$$I_{step2} \geq 0.7 \cdot 3I_0 \text{ (at remote busbar)}$$

(Equation 349)

To assure selectivity the current setting must be chosen so that step 2 does not operate at step 2 for faults on the next line from the remote substation. Consider a fault as shown in figure 206.

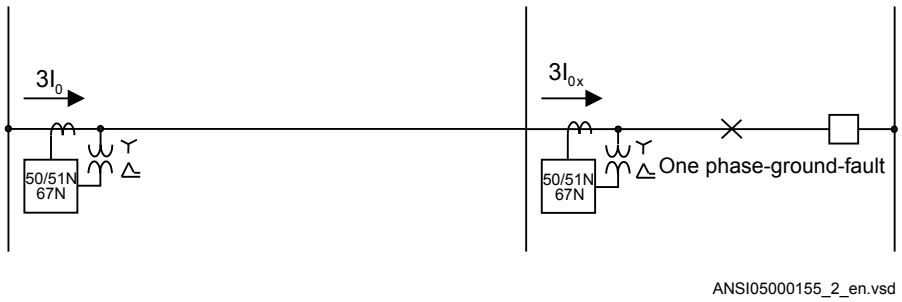

Figure 206: Step 2, selectivity calculation

A second criterion for step 2 is according to equation 350.

$$I_{step2} \geq 1.2 \cdot \frac{3I_0}{3I_{01}} \cdot I_{step1}$$

(Equation 350)

where:

Istep1 is the current setting for step 1 on the faulted line.

Step 3

This step has directional function and a time delay slightly larger than step 2, often 0.8 s. Step 3 shall enable selective trip of ground faults having higher fault resistance to ground, compared to step 2. The requirement on step 3 is selectivity to other ground-fault protections in the network. One criterion for setting is shown in figure 207.

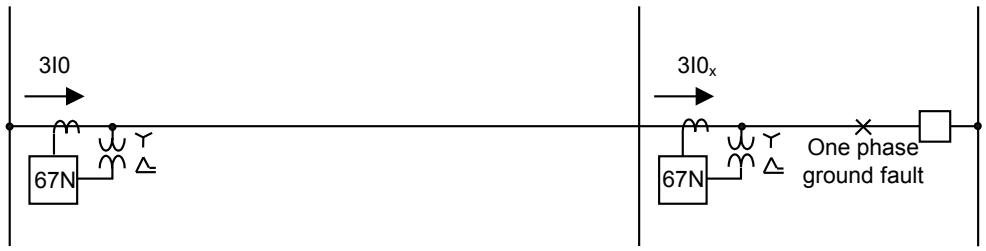

en05000156_ansi.vsd

Figure 207: Step 3, Selectivity calculation

$$I_{step3} \geq 1.2 \cdot \frac{3I_0}{3I_{02}} \cdot I_{step2}$$

(Equation 351)

where:

Istep2 is the chosen current setting for step 2 on the faulted line.

Step 4

This step normally has non-directional function and a relatively long time delay. The task for step 4 is to detect and initiate trip for ground faults with large fault resistance, for example tree faults. Step 4 shall also detect series faults where one or two poles, of a breaker or other switching device, are open while the other poles are closed.

Both high resistance ground faults and series faults give zero-sequence current flow in the network. Such currents give disturbances on telecommunication systems and current to ground. It is important to clear such faults both concerning personal security as well as risk of fire.

The current setting for step 4 is often set down to about 100 A (primary $3I_0$). In many applications definite time delay in the range 1.2 - 2.0 s is used. In other applications a current dependent inverse time characteristic is used. This enables a higher degree of selectivity also for sensitive ground-fault current protection.

3.7.4.3 Setting parameters

Table 97: EF4PTOC (51N67N) Group settings (basic)

Name	Values (Range)	Unit	Step	Default	Description
Operation	Disabled Enabled	-	-	Disabled	Disable/Enable Operation
IBase	1 - 99999	A	1	3000	Base value for current settings
VBase	0.05 - 2000.00	kV	0.05	400	Base value for voltage settings
AngleRCA	-180 - 180	Deg	1	65	Relay characteristic angle (RCA)
polMethod	Voltage Current Dual	-	-	Voltage	Type of polarization
VPolMin	1 - 100	%VB	1	1	Minimum voltage level for polarization in % of VBase
IPolMin	2 - 100	%IB	1	5	Minimum current level for polarization in % of IBase
RNPol	0.50 - 1000.00	ohm	0.01	5.00	Real part of source Z to be used for current polarisation
XNPol	0.50 - 3000.00	ohm	0.01	40.00	Imaginary part of source Z to be used for current polarisation
INDirPU	1 - 100	%IB	1	10	Residual current level for directional element in % of IBase
2ndHarmStab	5 - 100	%	1	20	Second harmonic restrain operation in % of IN magnitude
BlkParTransf	Disabled Enabled	-	-	Disabled	Enable blocking at parallel transformers
Use_PUValue	ST1 ST2 ST3 ST4	-	-	ST4	Current pickup blocking at parallel transf (step1, 2, 3 or 4)
SOTF	Disabled SOTF UnderTime SOTF&UnderTime	-	-	Disabled	SOTF operation mode (Off/SOTF/Undertime/ SOTF&Undertime)
SOTFSel	Open Closed CloseCommand	-	-	Open	Select signal that shall activate SOTF
StepForSOTF	Step 2 Step 3	-	-	Step 2	Selection of step used for SOTF
EnHarmRestSOTF	Disabled Enabled	-	-	Disabled	Enable harmonic restrain function in SOTF
tSOTF	0.000 - 60.000	s	0.001	0.200	Time delay for SOTF
t4U	0.000 - 60.000	s	0.001	1.000	Switch-onto-fault active time
ActUndrTimeSel	CB position CB command	-	-	CB position	Select signal to activate under time (CB Pos/ CBCommand)
tUnderTime	0.000 - 60.000	s	0.001	0.300	Time delay for under time

Table continues on next page

Name	Values (Range)	Unit	Step	Default	Description
DirModeSel1	Disabled Non-directional Forward Reverse	-	-	Non-directional	Directional mode of step 1 (Disabled, Nondir, Forward, Reverse)
Characterist1	ANSI Ext. inv. ANSI Very inv. ANSI Norm. inv. ANSI Mod. inv. ANSI Def. Time L.T.E. inv. L.T.V. inv. L.T. inv. IEC Norm. inv. IEC Very inv. IEC inv. IEC Ext. inv. IEC S.T. inv. IEC L.T. inv. IEC Def. Time Reserved Programmable RI type RD type	-	-	ANSI Def. Time	Time delay curve type for step 1
Pickup1	1 - 2500	%IB	1	100	Residual current pickup for step 1 in % of IBase
t1	0.000 - 60.000	s	0.001	0.000	Independent (defenite) time delay of step 1
TD1	0.05 - 999.00	-	0.01	0.05	Time multiplier for the dependent time delay for step 1
IMin1	1.00 - 10000.00	%IB	1.00	100.00	Minimum current for step 1
t1Min	0.000 - 60.000	s	0.001	0.000	Minimum operate time for inverse curves for step 1
MultPU1	1.0 - 10.0	-	0.1	2.0	Multiplier for scaling the current setting value for step 1
ResetTypeCrv1	Instantaneous IEC Reset ANSI reset	-	-	Instantaneous	Reset curve type for step 1
tReset1	0.000 - 60.000	s	0.001	0.020	Reset time delay for step 1
HarmRestrain1	Disabled Enabled	-	-	Enabled	Enable block of step 1 from harmonic restrain
tPCrv1	0.005 - 3.000	-	0.001	1.000	Parameter P for customer programmable curve for step 1
tACrv1	0.005 - 200.000	-	0.001	13.500	Parameter A for customer programmable curve for step 1
tBCrv1	0.00 - 20.00	-	0.01	0.00	Parameter B for customer programmable curve for step 1
tCCrv1	0.1 - 10.0	-	0.1	1.0	Parameter C for customer programmable curve for step 1
tPRCrv1	0.005 - 3.000	-	0.001	0.500	Parameter PR for customer programmable curve for step 1

Table continues on next page

Name	Values (Range)	Unit	Step	Default	Description
tTRCrv1	0.005 - 100.000	-	0.001	13.500	Parameter TR for customer programmable curve for step 1
tCRCrv1	0.1 - 10.0	-	0.1	1.0	Parameter CR for customer programmable curve for step 1
DirModeSel2	Disabled Non-directional Forward Reverse	-	-	Non-directional	Directional mode of step 2 (Disabled, Nondir, Forward, Reverse)
Characterist2	ANSI Ext. inv. ANSI Very inv. ANSI Norm. inv. ANSI Mod. inv. ANSI Def. Time L.T.E. inv. L.T.V. inv. L.T. inv. IEC Norm. inv. IEC Very inv. IEC inv. IEC Ext. inv. IEC S.T. inv. IEC L.T. inv. IEC Def. Time Reserved Programmable RI type RD type	-	-	ANSI Def. Time	Time delay curve type for step 2
Pickup2	1 - 2500	%IB	1	50	Residual current pickup for step 2 in % of IBase
t2	0.000 - 60.000	s	0.001	0.400	Independent (definitive) time delay of step 2
TD2	0.05 - 999.00	-	0.01	0.05	Time multiplier for the dependent time delay for step 2
IMin2	1.00 - 10000.00	%IB	1.00	50	Minimum current for step 2
t2Min	0.000 - 60.000	s	0.001	0.000	Minimum operate time for inverse curves step 2
MultPU2	1.0 - 10.0	-	0.1	2.0	Multiplier for scaling the current setting value for step 2
ResetTypeCrv2	Instantaneous IEC Reset ANSI reset	-	-	Instantaneous	Reset curve type for step 2
tReset2	0.000 - 60.000	s	0.001	0.020	Reset time delay for step 2
HarmRestrain2	Disabled Enabled	-	-	Enabled	Enable block of step 2 from harmonic restrain
tPCrv2	0.005 - 3.000	-	0.001	1.000	Parameter P for customer programmable curve for step 2
tACrv2	0.005 - 200.000	-	0.001	13.500	Parameter A for customer programmable curve for step 2
tBCrv2	0.00 - 20.00	-	0.01	0.00	Parameter B for customer programmable curve for step 2

Table continues on next page

Name	Values (Range)	Unit	Step	Default	Description
tCCrv2	0.1 - 10.0	-	0.1	1.0	Parameter C for customer programmable curve for step 2
tPRCrv2	0.005 - 3.000	-	0.001	0.500	Parameter PR for customer programmable curve for step 2
tTRCrv2	0.005 - 100.000	-	0.001	13.500	Parameter TR for customer programmable curve for step 2
tCRCrv2	0.1 - 10.0	-	0.1	1.0	Parameter CR for customer programmable curve for step 2
DirModeSel3	Disabled Non-directional Forward Reverse	-	-	Non-directional	Directional mode of step 3 (Disabled, Nondir, Forward, Reverse)
Characterist3	ANSI Ext. inv. ANSI Very inv. ANSI Norm. inv. ANSI Mod. inv. ANSI Def. Time L.T.V. inv. L.T. inv. IEC Norm. inv. IEC Very inv. IEC inv. IEC Ext. inv. IEC S.T. inv. IEC L.T. inv. IEC Def. Time Reserved Programmable RI type RD type	-	-	ANSI Def. Time	Time delay curve type for step 3
Pickup3	1 - 2500	%IB	1	33	Residual current pickup for step 3 in % of IBase
t3	0.000 - 60.000	s	0.001	0.800	Independent time delay of step 3
TD3	0.05 - 999.00	-	0.01	0.05	Time multiplier for the dependent time delay for step 3
IMin3	1.00 - 10000.00	%IB	1.00	33	Minimum current for step 3
t3Min	0.000 - 60.000	s	0.001	0.000	Minimum operate time for inverse curves for step 3
MultPU3	1.0 - 10.0	-	0.1	2.0	Multiplier for scaling the current setting value for step 3
ResetTypeCrv3	Instantaneous IEC Reset ANSI reset	-	-	Instantaneous	Reset curve type for step 3
tReset3	0.000 - 60.000	s	0.001	0.020	Reset time delay for step 3
HarmRestrain3	Disabled Enabled	-	-	Enabled	Enable block of step 3 from harmonic restrain
tPCrv3	0.005 - 3.000	-	0.001	1.000	Parameter P for customer programmable curve for step 3
tACrv3	0.005 - 200.000	-	0.001	13.500	Parameter A for customer programmable curve for step 3

Table continues on next page

Name	Values (Range)	Unit	Step	Default	Description
tBCrv3	0.00 - 20.00	-	0.01	0.00	Parameter B for customer programmable curve for step 3
tCCrv3	0.1 - 10.0	-	0.1	1.0	Parameter C for customer programmable curve step 3
tPRCrv3	0.005 - 3.000	-	0.001	0.500	Parameter PR for customer programmable curve step 3
tTRCrv3	0.005 - 100.000	-	0.001	13.500	Parameter TR for customer programmable curve step 3
tCRCrv3	0.1 - 10.0	-	0.1	1.0	Parameter CR for customer programmable curve for step 3
DirModeSel4	Disabled Non-directional Forward Reverse	-	-	Non-directional	Directional mode of step 4 (Disabled, Nondir, Forward, Reverse)
Characterist4	ANSI Ext. inv. ANSI Very inv. ANSI Norm. inv. ANSI Mod. inv. ANSI Def. Time L.T.E. inv. L.T.V. inv. L.T. inv. IEC Norm. inv. IEC Very inv. IEC inv. IEC Ext. inv. IEC S.T. inv. IEC L.T. inv. IEC Def. Time Reserved Programmable RI type RD type	-	-	ANSI Def. Time	Time delay curve type for step 4
Pickup4	1 - 2500	%IB	1	17	Residual current pickup for step 4 in % of IBase
t4	0.000 - 60.000	s	0.001	1.200	Independent (definitive) time delay of step 4
TD4	0.05 - 999.00	-	0.01	0.05	Time multiplier for the dependent time delay for step 4
IMin4	1.00 - 10000.00	%IB	1.00	17	Minimum current for step 4
t4Min	0.000 - 60.000	s	0.001	0.000	Minimum operate time in inverse curves step 4
MultPU4	1.0 - 10.0	-	0.1	2.0	Multiplier for scaling the current setting value for step 4
ResetTypeCrv4	Instantaneous IEC Reset ANSI reset	-	-	Instantaneous	Reset curve type for step 4
tReset4	0.000 - 60.000	s	0.001	0.020	Reset time delay for step 4
HarmRestrain4	Disabled Enabled	-	-	Enabled	Enable block of step 4 from harmonic restrain
tPCrv4	0.005 - 3.000	-	0.001	1.000	Parameter P for customer programmable curve for step 4

Table continues on next page

Name	Values (Range)	Unit	Step	Default	Description
tACrv4	0.005 - 200.000	-	0.001	13.500	Parameter A for customer programmable curve step 4
tBCrv4	0.00 - 20.00	-	0.01	0.00	Parameter B for customer programmable curve for step 4
tCCrv4	0.1 - 10.0	-	0.1	1.0	Parameter C for customer programmable curve step 4
tPRCrv4	0.005 - 3.000	-	0.001	0.500	Parameter PR for customer programmable curve step 4
tTRCrv4	0.005 - 100.000	-	0.001	13.500	Parameter TR for customer programmable curve step 4
tCRCrv4	0.1 - 10.0	-	0.1	1.0	Parameter CR for customer programmable curve step 4

3.7.5 Four step directional negative phase sequence overcurrent protection NS4PTOC (46I2)

Function description	IEC 61850 identification	IEC 60617 identification	ANSI/IEEE C37.2 device number
Four step negative sequence overcurrent protection	NS4PTOC	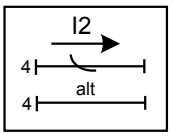	46I2

3.7.5.1 Application

Four step negative sequence overcurrent protection NS4PTOC (4612) is used in several applications in the power system. Some applications are:

- Ground-fault and phase-phase short circuit protection of feeders in effectively grounded distribution and subtransmission systems. Normally these feeders have radial structure.
- Back-up ground-fault and phase-phase short circuit protection of transmission lines.
- Sensitive ground-fault protection of transmission lines. NS4PTOC (4612) can have better sensitivity to detect resistive phase-to-ground-faults compared to distance protection.
- Back-up ground-fault and phase-phase short circuit protection of power transformers.
- Ground-fault and phase-phase short circuit protection of different kinds of equipment connected to the power system such as shunt capacitor banks, shunt reactors and others.

In many applications several steps with different current pickup levels and time delays are needed. NS4PTOC (4612) can have up to four, individual settable steps. The flexibility of each step of NS4PTOC (4612) function is great. The following options are possible:

Non-directional/Directional function: In some applications the non-directional functionality is used. This is mostly the case when no fault current can be fed from the protected object itself. In order to achieve both selectivity and fast fault clearance, the directional function can be necessary. This can be the case for unsymmetrical fault protection in meshed and effectively grounded transmission systems. The directional negative sequence overcurrent protection is also well suited to operate in teleprotection communication schemes, which enables fast clearance of unsymmetrical faults on transmission lines. The directional function uses the polarizing quantity as decided by setting. Voltage polarizing is most commonly used but alternatively dual polarizing, where the sum of both voltage and current components is allowed to polarize, can also be selected.

Choice of time characteristics: There are several types of time characteristics available such as definite time delay and different types of inverse time characteristics. The selectivity between different overcurrent protections is normally enabled by co-ordination between the operating time of the different protections. To enable optimal co-ordination all overcurrent relays, to be co-ordinated against each other, should have the same time characteristic. Therefore a wide range of standardized inverse time characteristics are available: IEC and ANSI.

Table 98: Inverse time characteristics

Curve name
ANSI Extremely Inverse
ANSI Very Inverse
ANSI Normal Inverse
ANSI Moderately Inverse
ANSI/IEEE Definite time
ANSI Long Time Extremely Inverse
ANSI Long Time Very Inverse
ANSI Long Time Inverse
IEC Normal Inverse
IEC Very Inverse
IEC Inverse
IEC Extremely Inverse
IEC Short Time Inverse
IEC Long Time Inverse
Table continues on next page

Curve name
IEC Definite Time
User Programmable
ASEA RI
RXIDG (logarithmic)

There is also a user programmable inverse time characteristic.

Normally it is required that the negative sequence overcurrent function shall reset as fast as possible when the current level gets lower than the operation level. In some cases some sort of delayed reset is required. Therefore different kinds of reset characteristics can be used.

For some protection applications there can be a need to change the current pickup level for some time. Therefore there is a possibility to give a setting of a multiplication factor *MultPUx* to the negative sequence current pick-up level. This multiplication factor is activated from a binary input signal MULTPUx to the function.

3.7.5.2 Setting guidelines

The parameters for Four step negative sequence overcurrent protection NS4PTOC (46I2) are set via the local HMI or Protection and Control Manager (PCM600).

The following settings can be done for the four step negative sequence overcurrent protection:

Operation: Sets the protection to *Enabled* or *Disabled*.

IBase: Base current in primary A. This current is used as reference for current setting. It can be suitable to set this parameter to the rated primary current of the protected object where the current measurement is made.

VBase: Base voltage level in kV. This voltage is given as a phase-to-phase voltage and this is the reference for voltage related settings of the function. This voltage is internally divided by √3.

When inverse time overcurrent characteristic is selected, the operate time of the stage will be the sum of the inverse time delay and the set definite time delay. Thus, if only the inverse time delay is required, it is of utmost importance to set the definite time delay for that stage to zero.

Settings for each step

x means step 1, 2, 3 and 4.

DirModeSelx: The directional mode of step x. Possible settings are off/nondirectional/forward/reverse.

Characteristx: Selection of time characteristic for step *x*. Definite time delay and different types of inverse time characteristics are available.

Table 99: Inverse time characteristics

Curve name
ANSI Extremely Inverse
ANSI Very Inverse
ANSI Normal Inverse
ANSI Moderately Inverse
ANSI/IEEE Definite time
ANSI Long Time Extremely Inverse
ANSI Long Time Very Inverse
ANSI Long Time Inverse
IEC Normal Inverse
IEC Very Inverse
IEC Inverse
IEC Extremely Inverse
IEC Short Time Inverse
IEC Long Time Inverse
IEC Definite Time
User Programmable
ASEA RI
RXIDG (logarithmic)

The different characteristics are described in the Technical Reference Manual (TRM).

Pickupx: Operation negative sequence current level for step x given in % of *IBase*.

tx: Definite time delay for step x. Used if definite time characteristic is chosen.

TDx: Time multiplier for the dependent (inverse) characteristic.

IMinx: Minimum operate current for step x in % of IBase. Set *IMinx* below *Pickupx* for every step to achieve ANSI reset characteristic according to standard. If *IMinx* is set above *Pickupx* for any step the ANSI reset works as if current is zero when current drops below *IMinx*.

MultPUx: Multiplier for scaling of the current setting value. If a binary input signal (ENMULTx) is activated the current operation level is multiplied by this setting constant.

txMin: Minimum operation time for inverse time characteristics. At high currents the inverse time characteristic might give a very short operation time. By setting this parameter the operation time of the step can never be shorter than the setting.

ResetTypeCrvx: The reset of the delay timer can be made in different ways. By choosing setting there are the following possibilities:

Curve name
Instantaneous
IEC Reset (constant time)
ANSI Reset (inverse time)

The different reset characteristics are described in the Technical Reference Manual (TRM). There are some restrictions regarding the choice of reset delay.

For the independent time delay characteristics the possible delay time settings are instantaneous (1) and IEC (2 = set constant time reset).

For ANSI inverse time delay characteristics all three types of reset time characteristics are available; instantaneous (1), IEC (2 = set constant time reset) and ANSI (3 = current dependent reset time).

For IEC inverse time delay characteristics the possible delay time settings are instantaneous (1) and IEC (2 = set constant time reset).

For the programmable inverse time delay characteristics all three types of reset time characteristics are available; instantaneous (1), IEC (2 = set constant time reset) and ANSI (3 = current dependent reset time). If the current dependent type is used settings *pr*, *tr* and *cr* must be given.

tPCrvx, *tACrvx*, *tBCrvx*, *tCCrvx*: Parameters for programmable inverse time characteristic curve (Curve type = 17). The time characteristic equation is according to equation 345:

$$t[s] = \left(\frac{A}{\left(\frac{i}{ipickup}\right)^{p} - C} + B \right) \cdot TD$$

(Equation 352)

Further description can be found in the Technical reference manual (TRM).

tPRCrvx, tTRCrvx, tCRCrvx: Parameters for programmable inverse reset time characteristic curve. Further description can be found in the Technical reference manual (TRM).

Common settings for all steps

x means step 1, 2, 3 and 4.

AngleRCA: Relay characteristic angle given in degrees. This angle is defined as shown in figure 199. The angle is defined positive when the residual current lags the reference voltage (Vpol = -)

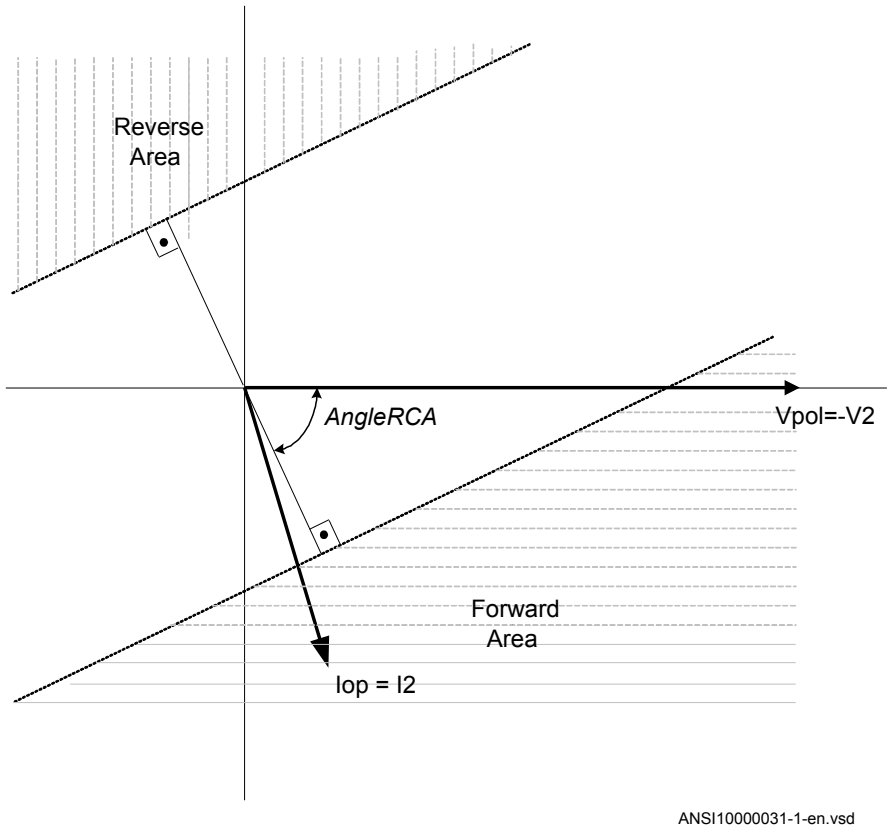

Figure 208: Relay characteristic angle given in degree

In a transmission network a normal value of RCA is about 80°.

VPolMin: Minimum polarization (reference) voltage % of *VBase*.

I>Dir: Operate residual current level for directional comparison scheme. The setting is given in % of *IBase*. The pickup forward or pickup reverse signals can be used in a communication scheme. The appropriate signal must be configured to the communication scheme block.

3.7.5.3 Setting parameters

Table 100: NS4PTOC (46I2) Group settings (basic)

Name	Values (Range)	Unit	Step	Default	Description
Operation	Disabled Enabled	-	-	Disabled	Disable/Enable Operation
IBase	1 - 99999	A	1	3000	Base value for current settings
VBase	0.05 - 2000.00	kV	0.05	400	Base value for voltage settings
Table continues on next page					

Name	Values (Range)	Unit	Step	Default	Description
AngleRCA	-180 - 180	Deg	1	65	Relay characteristic angle (RCA)
polMethod	Voltage Dual	-	-	Voltage	Type of polarization
VPolMin	1 - 100	%VB	1	5	Minimum voltage level for polarization in % of VBase
IPolMin	2 - 100	%IB	1	5	Minimum current level for polarization in % of IBase
RPol	0.50 - 1000.00	ohm	0.01	5.00	Real part of neg. seq. source imp. to be used for current polarisation
XPol	0.50 - 3000.00	ohm	0.01	40.00	Imaginary part of neg. seq. source imp. to be used for current polarisation
I>Dir	1 - 100	%IB	1	10	Neg. seq. curr. I2 level for Direction release in % of IBase
DirModeSel1	Disabled Non-directional Forward Reverse	-	-	Non-directional	Directional mode of step 1 (Disabled, Nondir, Forward, Reverse)
Characterist1	ANSI Ext. inv. ANSI Very inv. ANSI Norm. inv. ANSI Mod. inv. ANSI Def. Time L.T.E. inv. L.T.V. inv. L.T. inv. IEC Norm. inv. IEC Very inv. IEC inv. IEC Ext. inv. IEC S.T. inv. IEC L.T. inv. IEC Def. Time Reserved Programmable RI type RD type	-	-	ANSI Def. Time	Time delay curve type for step 1
Pickup1	1 - 2500	%IB	1	100	Operate neg. seq. curr. I2 level for step 1 in % of IBase
t1	0.000 - 60.000	s	0.001	0.000	Independent (defenite) time delay of step 1
TD1	0.05 - 999.00	-	0.01	0.05	Time multiplier for the dependent time delay for step 1
IMin1	1.00 - 10000.00	%IB	1.00	100.00	Minimum current for step 1
t1Min	0.000 - 60.000	s	0.001	0.000	Minimum operate time for inverse curves for step 1
MultPU1	1.0 - 10.0	-	0.1	2.0	Multiplier for scaling the current setting value for step 1
ResetTypeCrv1	Instantaneous IEC Reset ANSI reset	-	-	Instantaneous	Reset curve type for step 1

Table continues on next page

Name	Values (Range)	Unit	Step	Default	Description
tReset1	0.000 - 60.000	s	0.001	0.020	Reset time delay for step 1
tPCrv1	0.005 - 3.000	-	0.001	1.000	Parameter P for customer programmable curve for step 1
tACrv1	0.005 - 200.000	-	0.001	13.500	Parameter A for customer programmable curve for step 1
tBCrv1	0.00 - 20.00	-	0.01	0.00	Parameter B for customer programmable curve for step 1
tCCrv1	0.1 - 10.0	-	0.1	1.0	Parameter C for customer programmable curve for step 1
tPRCrv1	0.005 - 3.000	-	0.001	0.500	Parameter PR for customer programmable curve for step 1
tTRCrv1	0.005 - 100.000	-	0.001	13.500	Parameter TR for customer programmable curve for step 1
tCRCrv1	0.1 - 10.0	-	0.1	1.0	Parameter CR for customer programmable curve for step 1
DirModeSel2	Disabled Non-directional Forward Reverse	-	-	Non-directional	Directional mode of step 2 (Disabled, Nondir, Forward, Reverse)
Characterist2	ANSI Ext. inv. ANSI Very inv. ANSI Norm. inv. ANSI Mod. inv. ANSI Def. Time L.T.E. inv. L.T.V. inv. L.T. inv. IEC Norm. inv. IEC Very inv. IEC inv. IEC Ext. inv. IEC S.T. inv. IEC L.T. inv. IEC Def. Time Reserved Programmable RI type RD type	-	-	ANSI Def. Time	Time delay curve type for step 2
Pickup2	1 - 2500	%IB	1	50	Operate neg. seq. curr. I2 level for step 2 in % of IBase
t2	0.000 - 60.000	s	0.001	0.400	Independent (definitive) time delay of step 2
TD2	0.05 - 999.00	-	0.01	0.05	Time multiplier for the dependent time delay for step 2
IMin2	1.00 - 10000.00	%IB	1.00	50	Minimum current for step 2
t2Min	0.000 - 60.000	s	0.001	0.000	Minimum operate time for inverse curves step 2
MultPU2	1.0 - 10.0	-	0.1	2.0	Multiplier for scaling the current setting value for step 2

Table continues on next page

Name	Values (Range)	Unit	Step	Default	Description
ResetTypeCrv2	Instantaneous IEC Reset ANSI reset	-	-	Instantaneous	Reset curve type for step 2
tReset2	0.000 - 60.000	s	0.001	0.020	Reset time delay for step 2
tPCrv2	0.005 - 3.000	-	0.001	1.000	Parameter P for customer programmable curve for step 2
tACrv2	0.005 - 200.000	-	0.001	13.500	Parameter A for customer programmable curve for step 2
tBCrv2	0.00 - 20.00	-	0.01	0.00	Parameter B for customer programmable curve for step 2
tCCrv2	0.1 - 10.0	-	0.1	1.0	Parameter C for customer programmable curve for step 2
tPRCrv2	0.005 - 3.000	-	0.001	0.500	Parameter PR for customer programmable curve for step 2
tTRCrv2	0.005 - 100.000	-	0.001	13.500	Parameter TR for customer programmable curve for step 2
tCRCrv2	0.1 - 10.0	-	0.1	1.0	Parameter CR for customer programmable curve for step 2
DirModeSel3	Disabled Non-directional Forward Reverse	-	-	Non-directional	Directional mode of step 3 (Disabled, Nondir, Forward, Reverse)
Characterist3	ANSI Ext. inv. ANSI Very inv. ANSI Norm. inv. ANSI Mod. inv. ANSI Def. Time L.T.V. inv. L.T. inv. IEC Norm. inv. IEC Very inv. IEC inv. IEC Ext. inv. IEC S.T. inv. IEC L.T. inv. IEC Def. Time Reserved Programmable RI type RD type	-	-	ANSI Def. Time	Time delay curve type for step 3
Pickup3	1 - 2500	%IB	1	33	Operate neg. seq. curr. I2 level for step 3 in % of IBase
t3	0.000 - 60.000	s	0.001	0.800	Independent time delay of step 3
TD3	0.05 - 999.00	-	0.01	0.05	Time multiplier for the dependent time delay for step 3
IMin3	1.00 - 10000.00	%IB	1.00	33	Minimum current for step 3
t3Min	0.000 - 60.000	s	0.001	0.000	Minimum operate time for inverse curves for step 3

Table continues on next page

Name	Values (Range)	Unit	Step	Default	Description
MultPU3	1.0 - 10.0	-	0.1	2.0	Multiplier for scaling the current setting value for step 3
ResetTypeCrv3	Instantaneous IEC Reset ANSI reset	-	-	Instantaneous	Reset curve type for step 3
tReset3	0.000 - 60.000	s	0.001	0.020	Reset time delay for step 3
tPCrv3	0.005 - 3.000	-	0.001	1.000	Parameter P for customer programmable curve for step 3
tACrv3	0.005 - 200.000	-	0.001	13.500	Parameter A for customer programmable curve for step 3
tBCrv3	0.00 - 20.00	-	0.01	0.00	Parameter B for customer programmable curve for step 3
tCCrv3	0.1 - 10.0	-	0.1	1.0	Parameter C for customer programmable curve step 3
tPRCrv3	0.005 - 3.000	-	0.001	0.500	Parameter PR for customer programmable curve step 3
tTRCrv3	0.005 - 100.000	-	0.001	13.500	Parameter TR for customer programmable curve step 3
tCRCrv3	0.1 - 10.0	-	0.1	1.0	Parameter CR for customer programmable curve for step 3
DirModeSel4	Disabled Non-directional Forward Reverse	-	-	Non-directional	Directional mode of step 4 (Disabled, Nondir, Forward, Reverse)
Characterist4	ANSI Ext. inv. ANSI Very inv. ANSI Norm. inv. ANSI Mod. inv. ANSI Def. Time L.T.E. inv. L.T.V. inv. L.T. inv. IEC Norm. inv. IEC Very inv. IEC inv. IEC Ext. inv. IEC S.T. inv. IEC L.T. inv. IEC Def. Time Reserved Programmable RI type RD type	-	-	ANSI Def. Time	Time delay curve type for step 4
Pickup4	1 - 2500	%IB	1	17	Operate neg. seq. curr. I2 level for step 4 in % of IBase
t4	0.000 - 60.000	s	0.001	1.200	Independent (definitive) time delay of step 4
TD4	0.05 - 999.00	-	0.01	0.05	Time multiplier for the dependent time delay for step 4
IMin4	1.00 - 10000.00	%IB	1.00	17	Minimum current for step 4

Table continues on next page

Name	Values (Range)	Unit	Step	Default	Description
t4Min	0.000 - 60.000	s	0.001	0.000	Minimum operate time in inverse curves step 4
MultPU4	1.0 - 10.0	-	0.1	2.0	Multiplier for scaling the current setting value for step 4
ResetTypeCrv4	Instantaneous IEC Reset ANSI reset	-	-	Instantaneous	Reset curve type for step 4
tReset4	0.000 - 60.000	s	0.001	0.020	Reset time delay for step 4
tPCrv4	0.005 - 3.000	-	0.001	1.000	Parameter P for customer programmable curve for step 4
tACrv4	0.005 - 200.000	-	0.001	13.500	Parameter A for customer programmable curve step 4
tBCrv4	0.00 - 20.00	-	0.01	0.00	Parameter B for customer programmable curve for step 4
tCCrv4	0.1 - 10.0	-	0.1	1.0	Parameter C for customer programmable curve step 4
tPRCrv4	0.005 - 3.000	-	0.001	0.500	Parameter PR for customer programmable curve step 4
tTRCrv4	0.005 - 100.000	-	0.001	13.500	Parameter TR for customer programmable curve step 4
tCRCrv4	0.1 - 10.0	-	0.1	1.0	Parameter CR for customer programmable curve step 4

3.7.6 Sensitive directional residual overcurrent and power protection SDEPSDE (67N)

Function description	IEC 61850 identification	IEC 60617 identification	ANSI/IEEE C37.2 device number
Sensitive directional residual over current and power protection	SDEPSDE	-	67N

3.7.6.1 Application

In networks with high impedance grounding, the phase-to-ground fault current is significantly smaller than the short circuit currents. Another difficulty for ground-fault protection is that the magnitude of the phase-to-ground fault current is almost independent of the fault location in the network.

Directional residual current can be used to detect and give selective trip of phase-to-ground faults in high impedance grounded networks. The protection uses the residual current component $3I_0 \cdot \cos \varphi$, where φ is the angle between the residual current and

the residual voltage ($-3V_0$), compensated with a characteristic angle. Alternatively, the function can be set to strict $3I_0$ level with a check of angle $3I_0$ and cos φ.

Directional residual power can also be used to detect and give selective trip of phase-to-ground faults in high impedance grounded networks. The protection uses the residual power component $3I_0 \cdot 3V_0 \cdot \cos \varphi$, where φ is the angle between the residual current and the reference residual voltage, compensated with a characteristic angle.

A normal non-directional residual current function can also be used with definite or inverse time delay.

A back-up neutral point voltage function is also available for non-directional sensitive back-up protection.

In an isolated network, that is, the network is only coupled to ground via the capacitances between the phase conductors and ground, the residual current always has -90º phase shift compared to the reference residual voltage. The characteristic angle is chosen to -90º in such a network.

In resistance grounded networks or in Petersen coil grounded, with a parallel resistor, the active residual current component (in phase with the residual voltage) should be used for the ground-fault detection. In such networks the characteristic angle is chosen to 0º.

As the magnitude of the residual current is independent of the fault location the selectivity of the ground-fault protection is achieved by time selectivity.

When should the sensitive directional residual overcurrent protection be used and when should the sensitive directional residual power protection be used? Consider the following facts:

- Sensitive directional residual overcurrent protection gives possibility for better sensitivity. The setting possibilities of this function are down to 0.25 % of IBase, 1 A or 5 A. This sensitivity is in most cases sufficient in high impedance network applications, if the measuring CT ratio is not too high.
- Sensitive directional residual power protection gives possibility to use inverse time characteristics. This is applicable in large high impedance grounded networks, with large capacitive ground-fault current
- In some power systems a medium size neutral point resistor is used, for example, in low impedance grounded system. Such a resistor will give a resistive ground-fault current component of about 200 - 400 A at a zero resistive phase-to-ground fault. In such a system the directional residual power protection gives better possibilities for selectivity enabled by inverse time power characteristics.

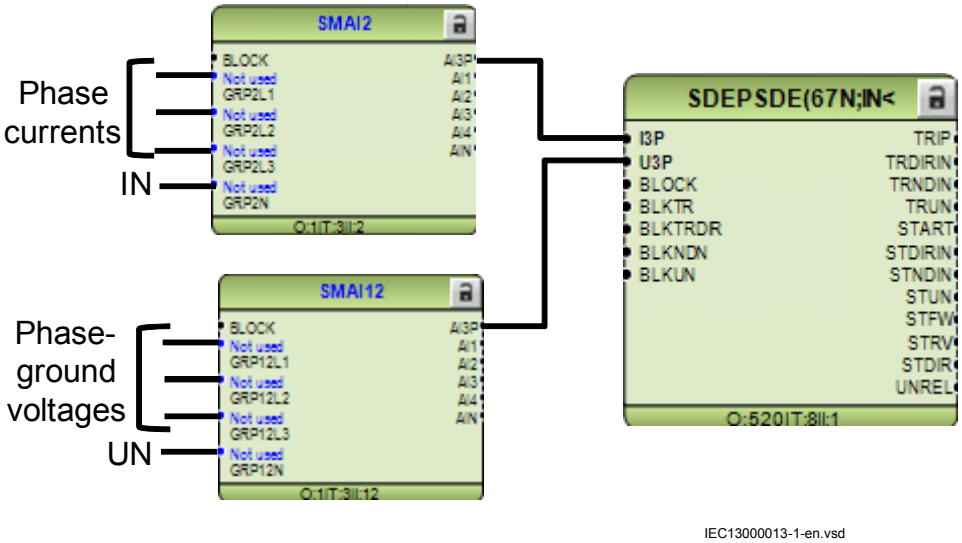

Figure 209: Connection of SDEPSDE to analog preprocessing function block

Over current functionality uses true 3I0, i.e. sum of GRPxL1, GRPxL2 and GRPxL3. For 3I0 to be calculated, connection is needed to all three phase inputs.

Directional and power functionality uses IN and UN. If a connection is made to GRPxN this signal is used, else if connection is made to all inputs GRPxL1, GRPxL2 and GRPxL3 the sum of these inputs (3I0 and 3U0) will be used.

3.7.6.2 Setting guidelines

The sensitive ground-fault protection is intended to be used in high impedance grounded systems, or in systems with resistive grounding where the neutral point resistor gives an ground-fault current larger than what normal high impedance gives but smaller than the phase to phase short circuit current.

In a high impedance system the fault current is assumed to be limited by the system zero sequence shunt impedance to ground and the fault resistance only. All the series impedances in the system are assumed to be zero.

In the setting of ground-fault protection, in a high impedance grounded system, the neutral point voltage (zero sequence voltage) and the ground-fault current will be calculated at the desired sensitivity (fault resistance). The complex neutral point voltage (zero sequence) can be calculated as:

$$V_0 = \frac{V_{phase}}{1 + \frac{3 \cdot R_f}{Z_0}}$$

(Equation 353)

Where

V_{phase} is the phase voltage in the fault point before the fault,

R_f is the resistance to ground in the fault point and

Z_0 is the system zero sequence impedance to ground

The fault current, in the fault point, can be calculated as:

$$I_j = 3I_0 = \frac{3 \cdot V_{phase}}{Z_0 + 3 \cdot R_f}$$

(Equation 354)

The impedance Z_0 is dependent on the system grounding. In an isolated system (without neutral point apparatus) the impedance is equal to the capacitive coupling between the phase conductors and ground:

$$Z_0 = -jX_c = -j\frac{3 \cdot V_{phase}}{I_j}$$

(Equation 355)

Where

I_j is the capacitive ground-fault current at a non-resistive phase to ground-fault

X_c is the capacitive reactance to ground

In a system with a neutral point resistor (resistance grounded system) the impedance Z_0 can be calculated as:

$$Z_0 = \frac{-jX_c \cdot 3R_n}{-jX_c + 3R_n}$$

(Equation 356)

Where

R_n is the resistance of the neutral point resistor

In many systems there is also a neutral point reactor (Petersen coil) connected to one or more transformer neutral points. In such a system the impedance Z_0 can be calculated as:

$$Z_0 = -jX_c \,//\, 3R_n \,//\, j3X_n = \frac{9R_n X_n X_c}{3X_n X_c + j3R_n \cdot \left(3X_n - X_c\right)}$$

(Equation 357)

Where

X_n is the reactance of the Petersen coil. If the Petersen coil is well tuned we have $3X_n = X_c$ In this case the impedance Z_0 will be: $Z_0 = 3R_n$

Now consider a system with an grounding via a resistor giving higher ground-fault current than the high impedance grounding. The series impedances in the system can no longer be neglected. The system with a single phase to ground-fault can be described as in figure 210.

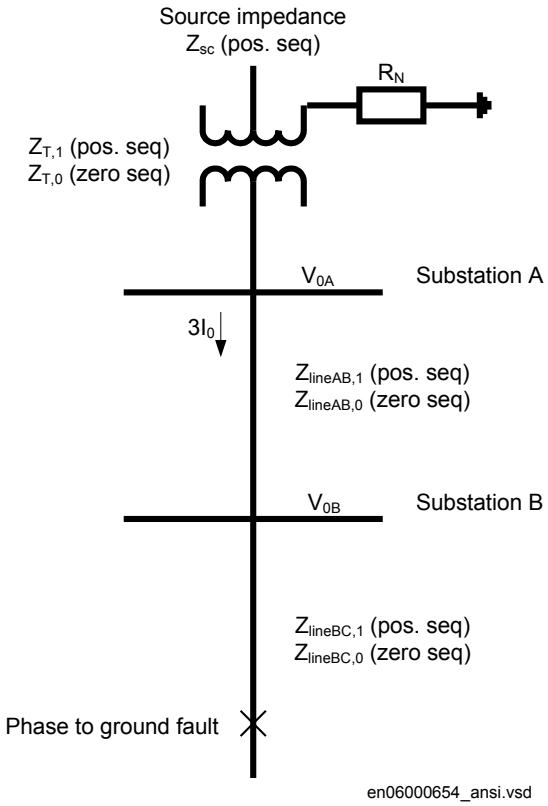

Figure 210: Equivalent of power system for calculation of setting

The residual fault current can be written:

$$3I_0 = \frac{3V_{phase}}{2 \cdot Z_1 + Z_0 + 3 \cdot R_f}$$

(Equation 358)

Where

V_{phase}	is the phase voltage in the fault point before the fault
Z_1	is the total positive sequence impedance to the fault point. $Z_1 = Z_{sc}+Z_{T,1}+Z_{lineAB,1}+Z_{lineBC,1}$
Z_0	is the total zero sequence impedance to the fault point. $Z_0 = Z_{T,0}+3R_N+Z_{lineAB,0}+Z_{lineBC,0}$
R_f	is the fault resistance.

The residual voltages in stations A and B can be written:

$$V_{0A} = 3I_0 \cdot (Z_{T,0} + 3R_N)$$

(Equation 359)

$$V_{OB} = 3I_0 \cdot (Z_{T,0} + 3R_N + Z_{lineAB,0})$$

(Equation 360)

The residual power, measured by the sensitive ground-fault protections in A and B will be:

$$S_{0A} = 3V_{0A} \cdot 3I_0$$

(Equation 361)

$$S_{0B} = 3V_{0B} \cdot 3I_0$$

(Equation 362)

The residual power is a complex quantity. The protection will have a maximum sensitivity in the characteristic angle RCA. The apparent residual power component in the characteristic angle, measured by the protection, can be written:

$$S_{0A,prot} = 3V_{0A} \cdot 3I_0 \cdot \cos\varphi_A$$

(Equation 363)

$$S_{0B,prot} = 3V_{0B} \cdot 3I_0 \cdot \cos\varphi_B$$

(Equation 364)

The angles φ_A and φ_B are the phase angles between the residual current and the residual voltage in the station compensated with the characteristic angle RCA.

The protection will use the power components in the characteristic angle direction for measurement, and as base for the inverse time delay.

The inverse time delay is defined as:

$$t_{inv} = \frac{TDSN \cdot (3I_0 \cdot 3V_0 \cdot \cos\phi(\text{reference}))}{3I_0 \cdot 3V_0 \cos\phi(\text{measured})}$$

(Equation 365)

The function can be set *Enabled/Disabled* with the setting of *Operation*.

The setting *IBase* gives the base current in A. Normally the primary rated current of the CT feeding the protection should be chosen.

The setting *VBase* gives the base voltage in kV. Normally the system phase to ground voltage is chosen.

The setting *SBase* gives the base voltage in kVA. Normally *IBase* · *VBase* is chosen.

With the setting *OpModeSel* the principle of directional function is chosen.

With *OpModeSel* set to *3I0cosfi* the current component in the direction equal to the characteristic angle*RCADir* has the maximum sensitivity. The characteristic for *RCADir* is equal to 0° is shown in figure 211.

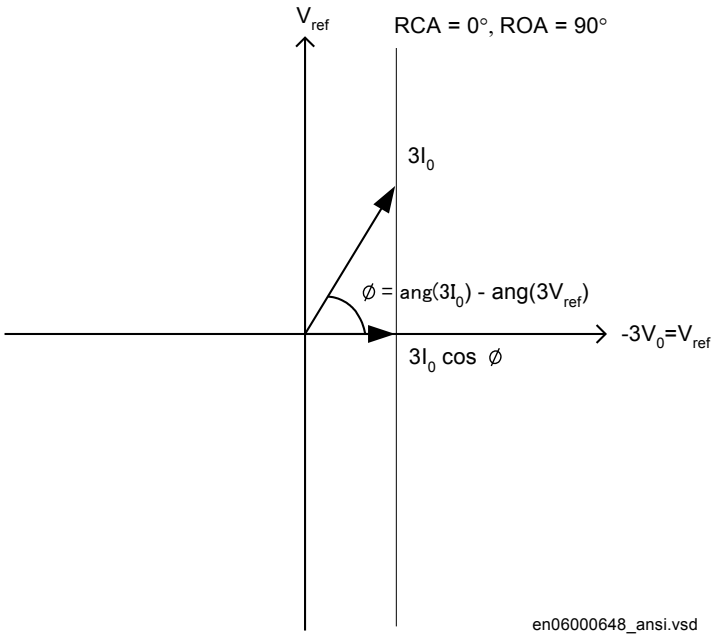

Figure 211: Characteristic for RCADir equal to 0°

The characteristic is for *RCADir* equal to -90° is shown in figure 212.

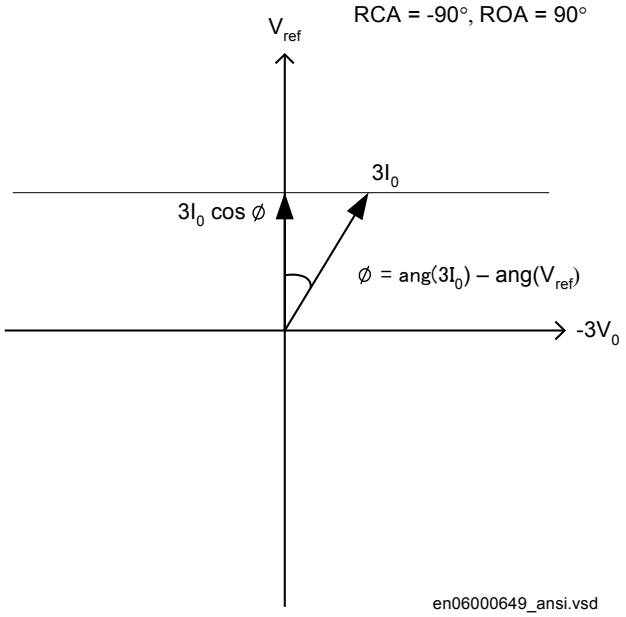

Figure 212: Characteristic for RCADir equal to -90°

When *OpModeSel* is set to *3I03V0Cosfi* the apparent residual power component in the direction is measured.

When *OpModeSel* is set to *3I0 and fi* the function will operate if the residual current is larger than the setting *INDirPU* and the residual current angle is within the sector *RCADir* ± *ROADir*.

The characteristic for *RCADir* = 0° and *ROADir* = 80° is shown in figure 213.

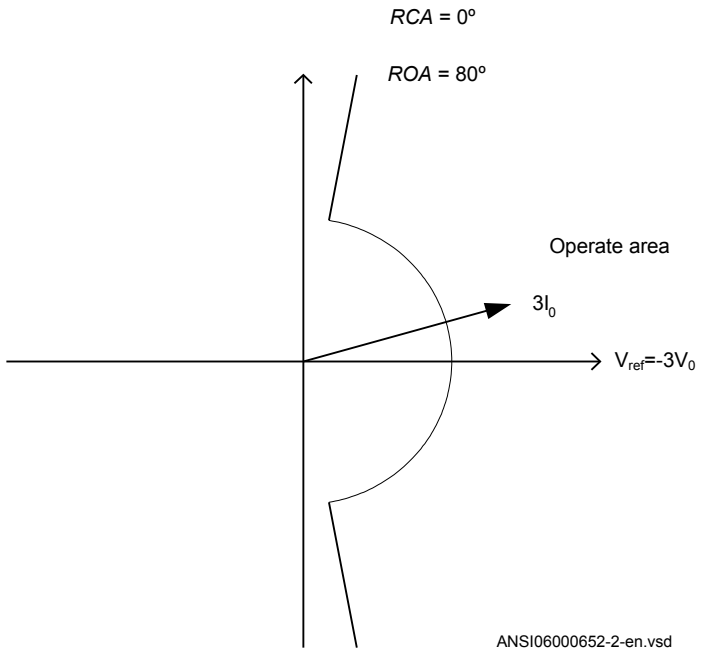

Figure 213: Characteristic for RCADir = 0° and ROADir = 80°

DirMode is set *Forward* or *Reverse* to set the direction of the trip function from the directional residual current function.

All the directional protection modes have a residual current release level setting *INRelPU* which is set in % of *IBase*. This setting should be chosen smaller than or equal to the lowest fault current to be detected.

All the directional protection modes have a residual voltage release level setting *VNRelPU* which is set in % of *VBase*. This setting should be chosen smaller than or equal to the lowest fault residual voltage to be detected.

tDef is the definite time delay, given in s, for the directional residual current protection if definite time delay is chosen.

tReset is the reset time for definite time delay, given in s. With a *tReset* time of several periods there is increased possibilities to clear intermittent ground-faults correctly. The setting shall be much shorter than the set trip delay.

The characteristic angle of the directional functions *RCADir* is set in degrees. *RCADir* is normally set equal to 0° in a high impedance grounded network with a neutral point resistor as the active current component is appearing out on the faulted feeder only. *RCADir* is set equal to -90° in an isolated network as all currents are mainly capacitive.

The relay open angle *ROADir* is set in degrees. For angles differing more than *ROADir* from*RCADir* the function from the protection is blocked. The setting can be used to

prevent unwanted function for non-faulted feeders, with large capacitive ground-fault current contributions, due to CT phase angle error.

INCosPhiPU is the operate current level for the directional function when *OpModeSel* is set *3I0Cosfi*. The setting is given in % of *IBase*. The setting should be based on calculation of the active or capacitive ground-fault current at required sensitivity of the protection.

SN_PU is the operate power level for the directional function when *OpModeSel* is set *3I03V0Cosfi*. The setting is given in % of *SBase*. The setting should be based on calculation of the active or capacitive ground-fault residual power at required sensitivity of the protection.

The input transformer for the Sensitive directional residual over current and power protection function has the same short circuit capacity as the phase current transformers.

If the time delay for residual power is chosen the delay time is dependent on two setting parameters. *SRef* is the reference residual power, given in % of *SBase*. *TDSN* is the time multiplier. The time delay will follow the following expression:

$$t_{inv} = \frac{TDSN \cdot Sref}{3I_0 \cdot 3V_0 \cdot \cos\varphi(measured)}$$

(Equation 366)

INDirPU is the operate current level for the directional function when *OpModeSel* is set *3I0 and fi*. The setting is given in % of *IBase*. The setting should be based on calculation of the ground-fault current at required sensitivity of the protection.

OpINNonDir is set *Enabled* to activate the non-directional residual current protection.

INNonDirPU is the operate current level for the non-directional function. The setting is given in % of *IBase*. This function can be used for detection and clearance of cross-country faults in a shorter time than for the directional function. The current setting should be larger than the maximum single-phase residual current out on the protected line.

TimeChar is the selection of time delay characteristic for the non-directional residual current protection. Definite time delay and different types of inverse time characteristics are available:

Table 101: Inverse time characteristics

Curve name
ANSI Extremely Inverse
ANSI Very Inverse
ANSI Normal Inverse
ANSI Moderately Inverse
ANSI/IEEE Definite time
ANSI Long Time Extremely Inverse
ANSI Long Time Very Inverse
ANSI Long Time Inverse
IEC Normal Inverse
IEC Very Inverse
IEC Inverse
IEC Extremely Inverse
IEC Short Time Inverse
IEC Long Time Inverse
IEC Definite Time
User Programmable
ASEA RI
RXIDG (logarithmic)

The different characteristics are described in Technical Manual.

tPCrv, tACrv, tBCrv, tCCrv: Parameters for customer creation of inverse time characteristic curve (Curve type = 17). The time characteristic equation is:

$$t[s] = \left(\frac{A}{\left(\frac{i}{Pickup\_N} \right)^{p} - C} + B \right) \cdot InMult$$

(Equation 367)

tINNonDir is the definite time delay for the non directional ground-fault current protection, given in s.

OpVN is set *Enabled* to activate the trip function of the residual voltage protection.

tVN is the definite time delay for the trip function of the residual voltage protection, given in s.

3.7.6.3 Setting parameters

Table 102: SDEPSDE (67N) Group settings (basic)

Name	Values (Range)	Unit	Step	Default	Description
Operation	Disabled Enabled	-	-	Disabled	Operation Disable / Enable
OpModeSel	3I0Cosfi 3I03V0Cosfi 3I0 and fi	-	-	3I0Cosfi	Selection of operation mode for protection
DirMode	Forward Reverse	-	-	Forward	Direction of operation forward or reverse
RCADir	-179 - 180	Deg	1	-90	Relay characteristic angle RCA, in deg
RCAComp	-10.0 - 10.0	Deg	0.1	0.0	Relay characteristic angle compensation
ROADir	0 - 90	Deg	1	90	Relay open angle ROA used as release in phase mode, in deg
INCosPhiPU	0.25 - 200.00	%IB	0.01	1.00	Set level for 3I0cosFi, directional res over current, in %Ib
SN_PU	0.25 - 200.00	%SB	0.01	10.00	Set level for 3I03V0cosFi, pickup inv time count, in %Sb
INDirPU	0.25 - 200.00	%IB	0.01	5.00	Set level for directional residual over current prot, in %Ib
tDef	0.000 - 60.000	s	0.001	0.100	Definite time delay directional residual overcurrent, in sec
SRef	0.03 - 200.00	%SB	0.01	10.00	Reference value of res power for inverse time count, in %Sb
TDSN	0.00 - 2.00	-	0.01	0.10	Time multiplier setting for directional residual power mode
OpINNonDir	Disabled Enabled	-	-	Disabled	Operation of non-directional residual overcurrent protection
INNonDirPU	1.00 - 400.00	%IB	0.01	10.00	Set level for non directional residual over current, in %Ib
tINNonDir	0.000 - 60.000	s	0.001	1.000	Time delay for non-directional residual over current, in sec

Table continues on next page

Name	Values (Range)	Unit	Step	Default	Description
TimeChar	ANSI Ext. inv. ANSI Very inv. ANSI Norm. inv. ANSI Mod. inv. ANSI Def. Time L.T.E. inv. L.T.V. inv. L.T. inv. IEC Norm. inv. IEC Very inv. IEC inv. IEC Ext. inv. IEC S.T. inv. IEC L.T. inv. IEC Def. Time Reserved Programmable RI type RD type	-	-	IEC Norm. inv.	Operation curve selection for IDMT operation
t_MinTripDelay	0.000 - 60.000	s	0.001	0.040	Minimum operate time for IEC IDMT curves, in sec
TDIN	0.00 - 2.00	-	0.01	1.00	IDMT time mult for non-dir res over current protection
OpVN	Disabled Enabled	-	-	Disabled	Operation of non-directional residual overvoltage protection
VN_PU	1.00 - 200.00	%VB	0.01	20.00	Set level for non-directional residual over voltage, in %Vb
tVN	0.000 - 60.000	s	0.001	0.100	Time delay for non-directional residual over voltage, in sec
INRelPU	0.25 - 200.00	%IB	0.01	1.00	Residual release current for all directional modes, in %Ib
VNRelPU	0.01 - 200.00	%VB	0.01	3.00	Residual release voltage for all direction modes, in %Vb

Table 103: SDEPSDE (67N) Group settings (advanced)

Name	Values (Range)	Unit	Step	Default	Description
tReset	0.000 - 60.000	s	0.001	0.040	Time delay used for reset of definite timers, in sec
tPCrv	0.005 - 3.000	-	0.001	1.000	Setting P for customer programmable curve
tACrv	0.005 - 200.000	-	0.001	13.500	Setting A for customer programmable curve
tBCrv	0.00 - 20.00	-	0.01	0.00	Setting B for customer programmable curve
tCCrv	0.1 - 10.0	-	0.1	1.0	Setting C for customer programmable curve
ResetTypeCrv	Immediate IEC Reset ANSI reset	-	-	IEC Reset	Reset mode when current drops off.
tPRCrv	0.005 - 3.000	-	0.001	0.500	Setting PR for customer programmable curve
tTRCrv	0.005 - 100.000	-	0.001	13.500	Setting TR for customer programmable curve
tCRCrv	0.1 - 10.0	-	0.1	1.0	Setting CR for customer programmable curve

Table 104: SDEPSDE (67N) Non group settings (basic)

Name	Values (Range)	Unit	Step	Default	Description
IBase	1 - 99999	A	1	100	Base Current, in A
VBase	0.05 - 2000.00	kV	0.05	63.50	Base Voltage, in kV Phase to Neutral
SBase	0.05 - 200000000.00	kVA	0.05	6350.00	Base Power, in kVA. IBase*Ubase

Table 105: SDEPSDE (67N) Non group settings (advanced)

Name	Values (Range)	Unit	Step	Default	Description
RotResV	0 deg 180 deg	-	-	180 deg	Setting for rotating polarizing quantity if necessary

3.7.7 Thermal overload protection, one time constant LPTTR

Function description	IEC 61850 identification	IEC 60617 identification	ANSI/IEEE C37.2 device number
Thermal overload protection, one time constant	LPTTR		26

3.7.7.1 Application

Lines and cables in the power system are designed for a certain maximum load current level. If the current exceeds this level the losses will be higher than expected. As a consequence the temperature of the conductors will increase. If the temperature of the lines and cables reaches too high values the equipment might be damaged:

- The sag of overhead lines can reach unacceptable value.
- If the temperature of conductors, for example aluminium conductors, get too high the material will be destroyed.
- In cables the insulation can be damaged as a consequence of the overtemperature. As a consequence of this phase to phase or phase to ground faults can occur

In stressed situations in the power system it can be required to overload lines and cables for a limited time. This should be done without risks.

If the temperature of the protected object reaches a set warning level *AlarmTemp*, a signal ALARM can be given to the operator. This enables actions in the power system

to be taken before dangerous temperatures are reached. If the temperature continues to increase to the trip value *TripTemp*, the protection initiates trip of the protected line.

3.7.7.2 Setting guideline

The parameters for the Thermal overload protection one time constant, Fahrenheit/Celsius LFPTTR/LCPTTR (26) are set via the local HMI or PCM600.

The following settings can be done for the thermal overload protection.

Operation: *Disabled*/*Enabled*

IBase: Base current in primary A. This current is used as reference for current setting. It can be suitable to set this parameter to the rated primary current of the protected object.

Imult: If the protection measures one of a number of parallel line currents the number of parallel circuits is given in this setting.

IRef: Reference, steady state current, given in % of *IBase* that will give a steady state (end) temperature rise *TRef*. It is suggested to set this current to the maximum steady state current allowed for the line/cable under emergency operation (a few hours per year).

TRef: Reference temperature rise (end temperature) corresponding to the steady state current *IRef*. From cable manuals current values with corresponding conductor temperature are often given. These values are given for conditions such as ground temperature, ambient air temperature, way of laying of cable and ground thermal resistivity. From manuals for overhead conductor temperatures and corresponding current is given.

Tau: The thermal time constant of the protected circuit given in minutes. Please refer to manufacturers manuals for details.

TripTemp: Temperature value for trip of the protected circuit. For cables, a maximum allowed conductor temperature is often stated to be 190°F (88°C). For overhead lines, the critical temperature for aluminium conductor is about 190-210°F (88-99°C). For a copper conductor a normal figure is 160°F (71°C).

AlarmTemp: Temperature level for alarm of the protected circuit. ALARM signal can be used as a warning before the circuit is tripped. Therefore the setting shall be lower than the trip level. It shall at the same time be higher than the maximum conductor temperature at normal operation. For cables this level is often given to 150°F (66°C). Similar values are stated for overhead lines. A suitable setting can be about 60°F (16°C) below the trip value.

ReclTemp: Temperature where lockout signal LOCKOUT from the protection is released. When the thermal overload protection trips a lock-out signal is activated. This signal is intended to block switch in of the protected circuit as long as the conductor

temperature is high. The signal is released when the estimated temperature is below the set value. This temperature value should be chosen below the alarm temperature.

3.7.7.3 Setting parameters

Table 106: LPTTR (26) Group settings (basic)

Name	Values (Range)	Unit	Step	Default	Description
Operation	Disabled Enabled	-	-	Disabled	Disable/Enable Operation
IBase	0 - 99999	A	1	3000	Base current in A
TRef	0 - 600	Deg	1	90	End temperature rise above ambient of the line when loaded with IRef
IRef	0 - 400	%IB	1	100	The load current (in % of IBase) leading to TRef temperature
IMult	1 - 5	-	1	1	Current multiplier when function is used for two or more lines
Tau	0 - 1000	Min	1	45	Time constant of the line in minutes.
AlarmTemp	0 - 200	Deg	1	80	Temperature level for pickup (alarm)
TripTemp	0 - 600	Deg	1	90	Temperature level for trip
ReclTemp	0 - 600	Deg	1	75	Temperature for reset of lockout after trip
tPulse	0.05 - 0.30	s	0.01	0.1	Operate pulse length. Minimum one execution cycle
AmbiSens	Disabled Enabled	-	-	Disabled	External temperature sensor availiable
DefaultAmbTemp	-50 - 250	Deg	1	20	Ambient temperature used when AmbiSens is set to Off.
DefaultTemp	-50 - 600	Deg	1	50	Temperature raise above ambient temperature at startup

3.7.8 Breaker failure protection CCRBRF (50BF)

Function description	IEC 61850 identification	IEC 60617 identification	ANSI/IEEE C37.2 device number
Breaker failure protection	CCRBRF	*3I>BF*	50BF

3.7.8.1 Application

In the design of the fault clearance system the N-1 criterion is often used. This means that a fault needs to be cleared even if any component in the fault clearance system is faulty. One necessary component in the fault clearance system is the circuit breaker. It is from practical and economical reason not feasible to duplicate the circuit breaker for the protected component. Instead a breaker failure protection is used.

Breaker failure protection, 3-phase activation and output (CCRBRF, 50BF) will issue a back-up trip command to adjacent circuit breakers in case of failure to trip of the “normal” circuit breaker for the protected component. The detection of failure to break the current through the breaker is made by means of current measurement or as detection of remaining trip signal (unconditional).

CCRBRF (50BF) can also give a re-trip. This means that a second trip signal is sent to the protected circuit breaker. The re-trip function can be used to increase the probability of operation of the breaker, or it can be used to avoid back-up trip of many breakers in case of mistakes during relay maintenance and test.

3.7.8.2 Setting guidelines

The parameters for Breaker failure protection 3-phase activation and output CCRBRF (50BF) are set via the local HMI or PCM600.

The following settings can be done for the breaker failure protection.

Operation: *Disabled*/*Enabled*

IBase: Base current in primary A. This current is used as reference for current setting. It can be suitable to set this parameter to the rated primary current of the current transformer where the current measurement is made.

FunctionMode This parameter can be set *Current* or *Contact*. This states the way the detection of failure of the breaker is performed. In the mode current the current measurement is used for the detection. In the mode *Contact* the long duration of breaker position signal is used as indicator of failure of the breaker. The mode *Current&Contact* means that both ways of detections are activated. *Contact* mode can be usable in applications where the fault current through the circuit breaker is small. This can be the case for some generator protection application (for example reverse power protection) or in case of line ends with weak end infeed.

RetripMode: This setting states how the re-trip function shall operate. *Retrip Off* means that the re-trip function is not activated. *CB Pos Check* (circuit breaker position check) and *Current* means that a phase current must be larger than the operate level to allow re-trip. *CB Pos Check* (circuit breaker position check) and *Contact* means re-trip is done

when circuit breaker is closed (breaker position is used). *No CBPos Check* means re-trip is done without check of breaker position.

Table 107: Dependencies between parameters RetripMode and FunctionMode

RetripMode	*FunctionMode*	Description
Retrip Off	N/A	the re-trip function is not activated
CB Pos Check	*Current*	a phase current must be larger than the operate level to allow re-trip
	Contact	re-trip is done when breaker position indicates that breaker is still closed after re-trip time has elapsed
	Current&Contact	both methods are used
No CBPos Check	*Current*	re-trip is done without check of breaker position
	Contact	re-trip is done without check of breaker position
	Current&Contact	both methods are used

BuTripMode: Back-up trip mode is given to state sufficient current criteria to detect failure to break. For *Current* operation *2 out of 4* means that at least two currents, of the three-phase currents and the residual current, shall be high to indicate breaker failure. *1 out of 3* means that at least one current of the three-phase currents shall be high to indicate breaker failure. *1 out of 4* means that at least one current of the three-phase currents or the residual current shall be high to indicate breaker failure. In most applications *1 out of 3* is sufficient. For *Contact* operation means back-up trip is done when circuit breaker is closed (breaker position is used).

Pickup_PH: Current level for detection of breaker failure, set in % of *IBase*. This parameter should be set so that faults with small fault current can be detected. The setting can be chosen in accordance with the most sensitive protection function to start the breaker failure protection. Typical setting is 10% of *IBase*.

Pickup_BlkCont: If any contact based detection of breaker failure is used this function can be blocked if any phase current is larger than this setting level. If the *FunctionMode* is set *Current&Contact* breaker failure for high current faults are safely detected by the current measurement function. To increase security the contact based function should be disabled for high currents. The setting can be given within the range 5 – 200% of *IBase*.

Pickup_N: Residual current level for detection of breaker failure set in % of *IBase*. In high impedance grounded systems the residual current at phase- to-ground faults are normally much smaller than the short circuit currents. In order to detect breaker failure at single-phase-ground faults in these systems it is necessary to measure the residual

current separately. Also in effectively grounded systems the setting of the ground-fault current protection can be chosen to relatively low current level. The *BuTripMode* is set *1 out of 4*. The current setting should be chosen in accordance to the setting of the sensitive ground-fault protection. The setting can be given within the range 2 – 200 % of *IBase*.

t1: Time delay of the re-trip. The setting can be given within the range 0 – 60s in steps of 0.001 s. Typical setting is 0 – 50ms.

t2: Time delay of the back-up trip. The choice of this setting is made as short as possible at the same time as unwanted operation must be avoided. Typical setting is 90 – 200ms (also dependent of re-trip timer).

The minimum time delay for the re-trip can be estimated as:

$$t2 \geq t1 + t_{cbopen} + t_{BFP\_reset} + t_{margin}$$

(Equation 368)

where:

t_{cbopen}	is the maximum opening time for the circuit breaker
t_{BFP_reset}	is the maximum time for breaker failure protection to detect correct breaker function (the current criteria reset)
t_{margin}	is a safety margin

It is often required that the total fault clearance time shall be less than a given critical time. This time is often dependent of the ability to maintain transient stability in case of a fault close to a power plant.

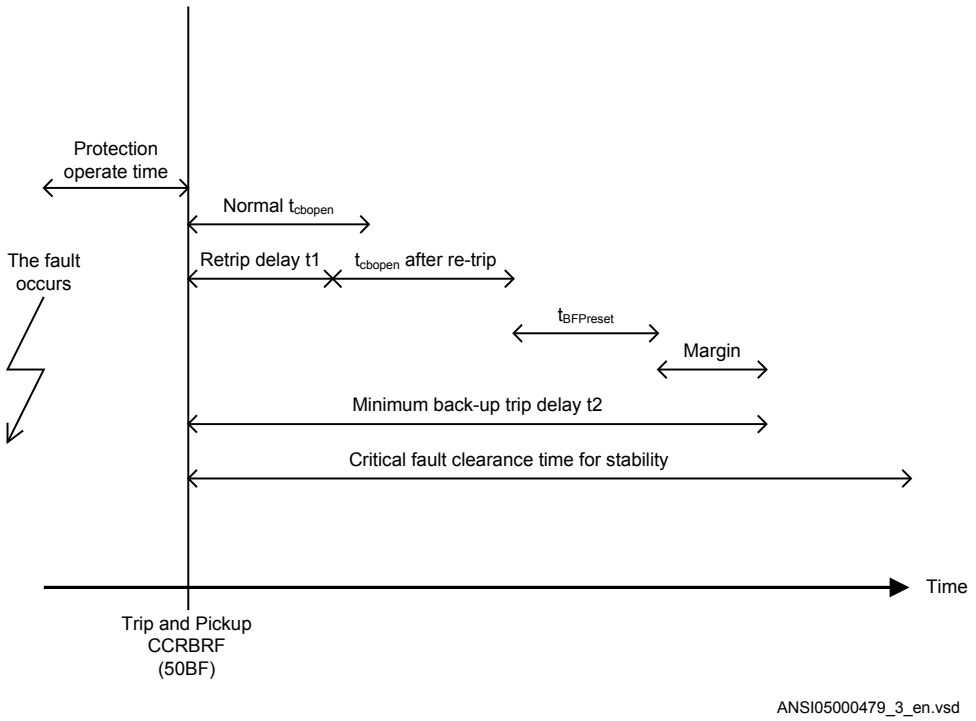

Figure 214: Time sequence

t2MPh: Time delay of the back-up trip at multi-phase initiate. The critical fault clearance time is often shorter in case of multi-phase faults, compared to single phase-to-ground faults. Therefore there is a possibility to reduce the back-up trip delay for multi-phase faults. Typical setting is 90 – 150 ms.

t3: Additional time delay to *t2* for a second back-up trip TRBU2. In some applications there might be a requirement to have separated back-up trip functions, tripping different back-up circuit breakers.

tCBAlarm: Time delay for alarm in case of indication of faulty circuit breaker. There is a binary input 52FAIL from the circuit breaker. This signal is activated when internal supervision in the circuit breaker detect that the circuit breaker is unable to clear fault. This could be the case when gas pressure is low in a SF6 circuit breaker, of others. After the set time an alarm is given, so that actions can be done to repair the circuit breaker. The time delay for back-up trip is bypassed when the 52FAIL is active. Typical setting is 2.0 seconds.

tPulse: Trip pulse duration. This setting must be larger than the critical impulse time of circuit breakers to be tripped from the breaker failure protection. Typical setting is 200 ms.

3.7.8.3 Setting parameters

Table 108: CCRBRF (50BF) Group settings (basic)

Name	Values (Range)	Unit	Step	Default	Description
Operation	Disabled Enabled	-	-	Disabled	Disable/Enable Operation
IBase	1 - 99999	A	1	3000	Base current
FunctionMode	Current Contact Current&Contact	-	-	Current	Detection principle for back-up trip
BuTripMode	2 out of 4 1 out of 3 1 out of 4	-	-	1 out of 3	Back-up trip mode
RetripMode	Retrip Off CB Pos Check No CBPos Check	-	-	Retrip Off	Operation mode of re-trip logic
Pickup_PH	5 - 200	%IB	1	10	Phase current pickup in % of IBase
Pickup_N	2 - 200	%IB	1	10	Operate residual current level in % of IBase
t1	0.000 - 60.000	s	0.001	0.000	Time delay of re-trip
t2	0.000 - 60.000	s	0.001	0.150	Time delay of back-up trip
t2MPh	0.000 - 60.000	s	0.001	0.150	Time delay of back-up trip at multi-phase pickup
tPulse	0.000 - 60.000	s	0.001	0.200	Trip pulse duration

Table 109: CCRBRF (50BF) Group settings (advanced)

Name	Values (Range)	Unit	Step	Default	Description
Pickup_BlkCont	5 - 200	%IB	1	20	Current for blocking of CB contact operation in % of IBase
t3	0.000 - 60.000	s	0.001	0.030	Additional time delay to 27P2TDLY for a second back-up trip
tCBAlarm	0.000 - 60.000	s	0.001	5.000	Time delay for CB faulty signal

3.7.9 Stub protection STBPTOC (50STB)

Function description	IEC 61850 identification	IEC 60617 identification	ANSI/IEEE C37.2 device number
Stub protection	STBPTOC	*3I>STUB*	50STB

3.7.9.1 Application

In a breaker-and-a-half switchyard the line protection and the busbar protection normally have overlap when a connected object is in service. When an object is taken out of service it is normally required to keep the diagonal of the breaker-and-a-half switchyard in operation. This is done by opening the disconnector to the protected object. This will, however, disable the normal object protection (for example the distance protection) of the energized part between the circuit breakers and the open disconnector.

Stub protection STBPTOC (50STB) is a simple phase overcurrent protection, fed from the two current transformer groups feeding the object taken out of service. The stub protection is only activated when the disconnector of the object is open. STBPTOC (50STB) enables fast fault clearance of faults at the section between the CTs and the open disconnector.

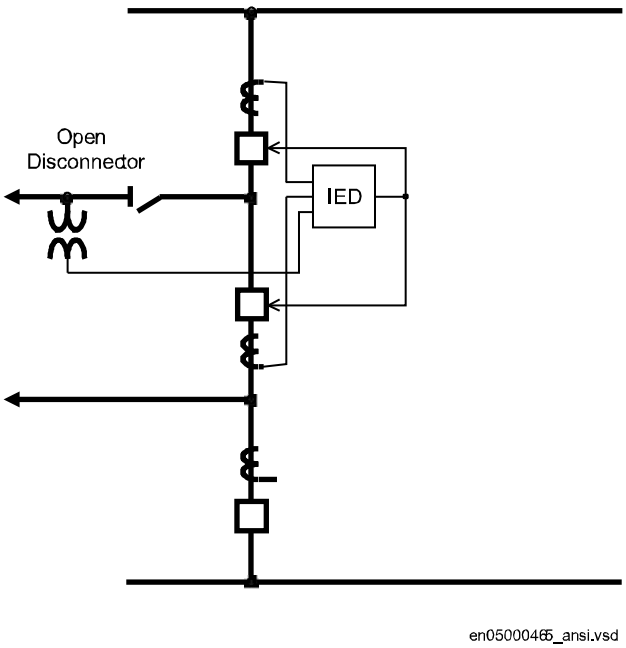

Figure 215: Typical connection for STBPTOC (50STB) in breaker-and-a-half arrangement.

3.7.9.2 Setting guidelines

The parameters for Stub protection STBPTOC (50STB) are set via the local HMI or PCM600.

The following settings can be done for the stub protection.

Operation: *Disabled*/*Enabled*

IBase: Base current in primary A. This current is used as reference for current setting. It can be suitable to set this parameter to the rated primary current of the current transformer where the current measurement is made.

EnableMode: This parameter can be set *Enable* or *Continuous*. With the*Enable* setting the function is only active when a binary release signal ENABLE into the function is activated. This signal is normally taken from an auxiliary contact (normally closed) of the line disconnector and connected to a binary input ENABLE of the IED. With the setting*Continuous* the function is activated independent of presence of any external release signal.

IPickup: Current level for the Stub protection, set in % of *IBase*. This parameter should be set so that all faults on the stub can be detected. The setting should thus be based on fault calculations.

t: Time delay of the operation. Normally the function shall be instantaneous.

3.7.9.3 Setting parameters

Table 110: STBPTOC (50STB) Group settings (basic)

Name	Values (Range)	Unit	Step	Default	Description
Operation	Disabled Enabled	-	-	Disabled	Disable/Enable Operation
IBase	1 - 99999	A	1	3000	Base current
EnableMode	Release Continuous	-	-	Release	Enable stub protection usually with open disconnect switch (89b)
IPickup	1 - 2500	%IB	1	200	Pickup current level in % of IBase

Table 111: STBPTOC (50STB) Group settings (advanced)

Name	Values (Range)	Unit	Step	Default	Description
t	0.000 - 60.000	s	0.001	0.000	Time delay

3.7.10 Pole discrepancy protection CCRPLD (52PD)

Function description	IEC 61850 identification	IEC 60617 identification	ANSI/IEEE C37.2 device number
Pole discrepancy protection	CCRPLD	PD	52PD

3.7.10.1 Application

There is a risk that a circuit breaker will get discrepancy between the poles at circuit breaker operation: closing or opening. One pole can be open and the other two closed, or two poles can be open and one closed. Pole discrepancy of a circuit breaker will cause unsymmetrical currents in the power system. The consequence of this can be:

- Negative sequence currents that will give stress on rotating machines
- Zero sequence currents that might give unwanted operation of sensitive ground-fault protections in the power system.

It is therefore important to detect situations with pole discrepancy of circuit breakers. When this is detected the breaker should be tripped directly.

Pole discordance protection CCRPLD (52PD) will detect situation with deviating positions of the poles of the protected circuit breaker. The protection has two different options to make this detection:

- By connecting the auxiliary contacts in the circuit breaker so that logic is created, a signal can be sent to the protection, indicating pole discrepancy. This logic can also be realized within the protection itself, by using opened and close signals for each circuit breaker pole, connected to the protection.
- Each phase current through the circuit breaker is measured. If the difference between the phase currents is larger than a *CurrUnsymPU* this is an indication of pole discrepancy, and the protection will operate.

3.7.10.2 Setting guidelines

The parameters for the Pole discordance protection CCRPLD (52PD) are set via the local HMI or PCM600.

The following settings can be done for the pole discrepancy protection.

Operation: *Disabled* or *Enabled*

IBase: Base current in primary A. This current is used as reference for current setting. It can be suitable to set this parameter to the rated primary current of the protected object where the current measurement is made.

tTrip: Time delay of the operation.

ContactSel: Operation of the contact based pole discrepancy protection. Can be set: *Disabled*/*PD signal from CB*. If *PD signal from CB* is chosen the logic to detect pole discrepancy is made in the vicinity to the breaker auxiliary contacts and only one signal is connected to the pole discrepancy function. If the *Pole pos aux cont.* alternative is

chosen each open close signal is connected to the IED and the logic to detect pole discrepancy is realized within the function itself.

CurrentSel: Operation of the current based pole discrepancy protection. Can be set: *Disabled*/*CB oper monitor*/*Continuous monitor*. In the alternative *CB oper monitor* the function is activated only directly in connection to breaker open or close command (during 200 ms). In the alternative *Continuous monitor* function is continuously activated.

CurrUnsymPU: Unsymmetrical magnitude of lowest phase current compared to the highest, set in % of the highest phase current. Natural difference between phase currents in breaker-and-a-half installations must be considered. For circuit breakers in breaker-and-a-half configured switch yards there might be natural unbalance currents through the breaker. This is due to the existence of low impedance current paths in the switch yard. This phenomenon must be considered in the setting of the parameter.

CurrRelPU: Current magnitude for release of the function in % of *IBase*.

3.7.10.3 Setting parameters

Table 112: CCRPLD (52PD) Group settings (basic)

Name	Values (Range)	Unit	Step	Default	Description
Operation	Disabled Enabled	-	-	Disabled	Disable/Enable Operation
IBase	1 - 99999	-	1	3000	Base current
tTrip	0.000 - 60.000	s	0.001	0.300	Time delay between trip condition and trip signal
ContactSel	Disabled PD signal from CB Pole pos aux cont.	-	-	Disabled	Contact function selection
CurrentSel	Disabled CB oper monitor Continuous monitor	-	-	Disabled	Current function selection
CurrUnsymPU	0 - 100	%	1	80	Unsym magn of lowest phase current compared to the highest.
CurrRelPU	0 - 100	%IB	1	10	Current magnitude for release of the function in % of IBase

3.7.11 Directional underpower protection GUPPDUP (37)

Function description	IEC 61850 identification	IEC 60617 identification	ANSI/IEEE C37.2 device number
Directional underpower protection	GUPPDUP	P < →	37

3.7.11.1 Application

The task of a generator in a power plant is to convert mechanical energy available as a torque on a rotating shaft to electric energy.

Sometimes, the mechanical power from a prime mover may decrease so much that it does not cover bearing losses and ventilation losses. Then, the synchronous generator becomes a synchronous motor and starts to take electric power from the rest of the power system. This operating state, where individual synchronous machines operate as motors, implies no risk for the machine itself. If the generator under consideration is very large and if it consumes lots of electric power, it may be desirable to disconnect it to ease the task for the rest of the power system.

Often, the motoring condition may imply that the turbine is in a very dangerous state. The task of the reverse power protection is to protect the turbine and not to protect the generator itself.

Steam turbines easily become overheated if the steam flow becomes too low or if the steam ceases to flow through the turbine. Therefore, turbo-generators should have reverse power protection. There are several contingencies that may cause reverse power: break of a main steam pipe, damage to one or more blades in the steam turbine or inadvertent closing of the main stop valves. In the last case, it is highly desirable to have a reliable reverse power protection. It may prevent damage to an otherwise undamaged plant.

During the routine shutdown of many thermal power units, the reverse power protection gives the tripping impulse to the generator breaker (the unit breaker). By doing so, one prevents the disconnection of the unit before the mechanical power has become zero. Earlier disconnection would cause an acceleration of the turbine generator at all routine shutdowns. This should have caused overspeed and high centrifugal stresses.

When the steam ceases to flow through a turbine, the cooling of the turbine blades will disappear. Now, it is not possible to remove all heat generated by the windage losses. Instead, the heat will increase the temperature in the steam turbine and especially of the blades. When a steam turbine rotates without steam supply, the electric power consumption will be about 2% of rated power. Even if the turbine rotates in vacuum, it will soon become overheated and damaged. The turbine overheats within minutes if the turbine loses the vacuum.

The critical time to overheating a steam turbine varies from about 0.5 to 30 minutes depending on the type of turbine. A high-pressure turbine with small and thin blades will become overheated more easily than a low-pressure turbine with long and heavy blades. The conditions vary from turbine to turbine and it is necessary to ask the turbine manufacturer in each case.

Power to the power plant auxiliaries may come from a station service transformer connected to the secondary side of the step-up transformer. Power may also come from a start-up service transformer connected to the external network. One has to design the reverse power protection so that it can detect reverse power independent of the flow of power to the power plant auxiliaries.

Hydro turbines tolerate reverse power much better than steam turbines do. Only Kaplan turbine and bulb turbines may suffer from reverse power. There is a risk that the turbine runner moves axially and touches stationary parts. They are not always strong enough to withstand the associated stresses.

Ice and snow may block the intake when the outdoor temperature falls far below zero. Branches and leaves may also block the trash gates. A complete blockage of the intake may cause cavitations. The risk for damages to hydro turbines can justify reverse power protection in unattended plants.

A hydro turbine that rotates in water with closed wicket gates will draw electric power from the rest of the power system. This power will be about 10% of the rated power. If there is only air in the hydro turbine, the power demand will fall to about 3%.

Diesel engines should have reverse power protection. The generator will take about 15% of its rated power or more from the system. A stiff engine may require perhaps 25% of the rated power to motor it. An engine that is good run in might need no more than 5%. It is necessary to obtain information from the engine manufacturer and to measure the reverse power during commissioning.

Gas turbines usually do not require reverse power protection.

Figure 216 illustrates the reverse power protection with underpower protection and with overpower protection. The underpower protection gives a higher margin and should provide better dependability. On the other hand, the risk for unwanted operation immediately after synchronization may be higher. One should set the underpower protection (reference angle set to 0) to trip if the active power from the generator is less than about 2%. One should set the overpower protection (reference angle set to 180) to trip if the power flow from the network to the generator is higher than 1%.

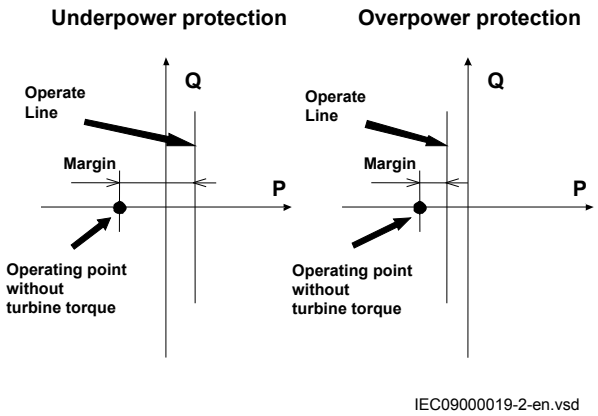

Figure 216: Reverse power protection with underpower or overpower protection

3.7.11.2 Setting guidelines

Operation: With the parameter *Operation* the function can be set *Enabled*/*Disabled*.

IBase: The parameter *IBase* is set to the generator rated current in A, see equation 369.

$$IBase = \frac{S_N}{\sqrt{3} \cdot V_N}$$

(Equation 369)

VBase: The parameter *VBase* is set to the generator rated voltage (phase-phase) in kV.

Mode: The voltage and current used for the power measurement. The setting possibilities are shown in table 113.

Table 113: Complex power calculation

Set value *Mode*	Formula used for complex power calculation
A, B, C	$\bar{S} = \bar{V}_A \cdot \bar{I}_A^* + \bar{V}_B \cdot \bar{I}_B^* + \bar{V}_C \cdot \bar{I}_C^*$ (Equation 370)
Arone	$\bar{S} = \bar{V}_{AB} \cdot \bar{I}_A^* - \bar{V}_{BC} \cdot \bar{I}_C^*$ (Equation 371)
PosSeq	$\bar{S} = 3 \cdot \bar{V}_{PosSeq} \cdot \bar{I}_{PosSeq}^*$ (Equation 372)
Table continues on next page	

Set value *Mode*	Formula used for complex power calculation
AB	$\bar{S} = \bar{V}_{AB} \cdot (\bar{I}_A^* - \bar{I}_B^*)$ (Equation 373)
BC	$\bar{S} = \bar{V}_{BC} \cdot (\bar{I}_B^* - \bar{I}_C^*)$ (Equation 374)
CA	$\bar{S} = \bar{V}_{CA} \cdot (\bar{I}_C^* - \bar{I}_A^*)$ (Equation 375)
A	$\bar{S} = 3 \cdot \bar{V}_A \cdot \bar{I}_A^*$ (Equation 376)
B	$\bar{S} = 3 \cdot \bar{V}_B \cdot \bar{I}_B^*$ (Equation 377)
C	$\bar{S} = 3 \cdot \bar{V}_C \cdot \bar{I}_C^*$ (Equation 378)

The function has two stages that can be set independently.

With the parameter *OpMode1(2)* the function can be set *Enabled*/*Disabled*.

The function gives trip if the power component in the direction defined by the setting *Angle1(2)* is smaller than the set pick up power value *Power1(2)*

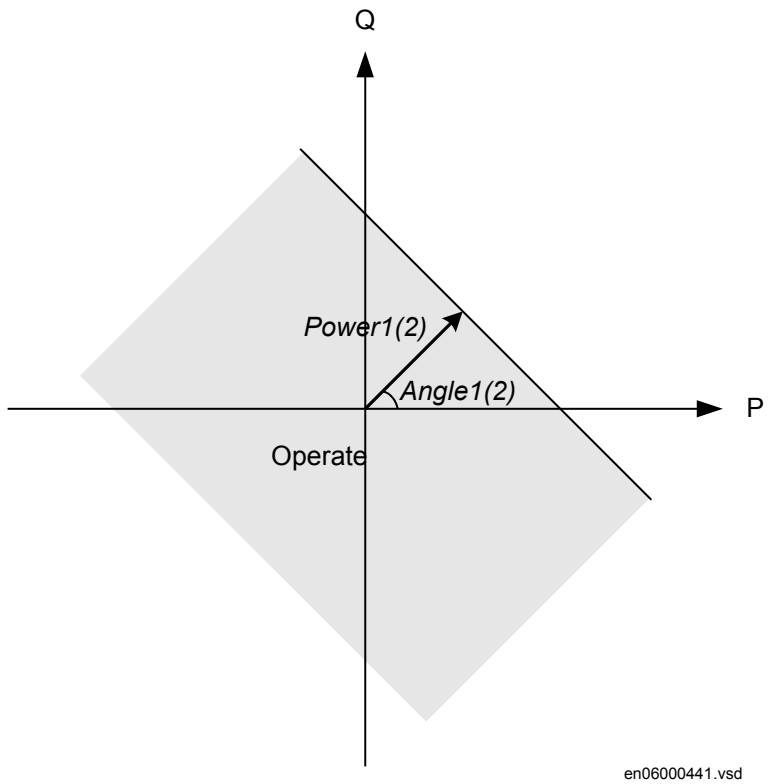

Figure 217: Underpower mode

The setting *Power1(2)* gives the power component pick up value in the *Angle1(2)* direction. The setting is given in p.u. of the generator rated power, see equation 379.

Minimum recommended setting is 0.2% of S_N when metering class CT inputs into the IED are used.

$$S_N = \sqrt{3} \cdot VBase \cdot IBase$$

(Equation 379)

The setting *Angle1(2)* gives the characteristic angle giving maximum sensitivity of the power protection function. The setting is given in degrees. For active power the set angle should be 0° or 180°. 0° should be used for generator low forward active power protection.

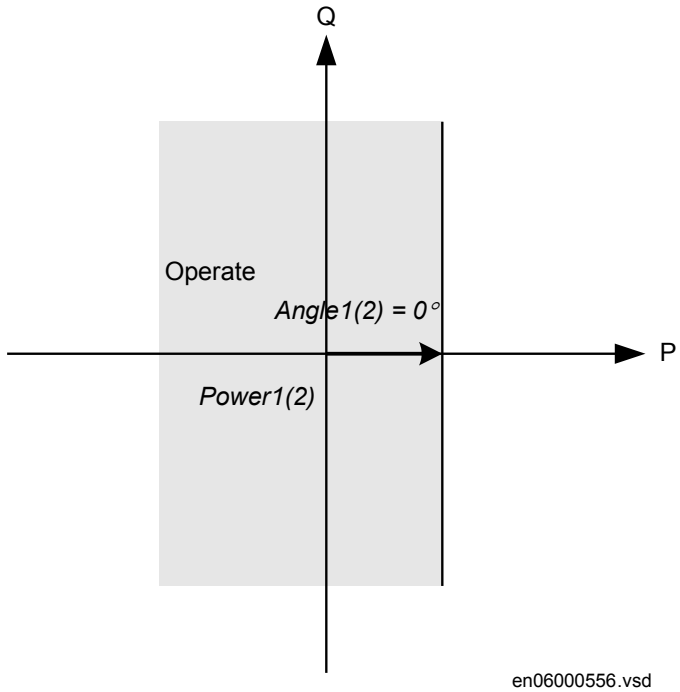

Figure 218: For low forward power the set angle should be 0° in the underpower function

TripDelay1(2) is set in seconds to give the time delay for trip of the stage after pick up.

Hysteresis1(2) is given in p.u. of generator rated power according to equation 380.

$$S_N = \sqrt{3} \cdot VBase \cdot IBase$$

(Equation 380)

The drop out power will be *Power1(2) + Hysteresis1(2)*.

The possibility to have low pass filtering of the measured power can be made as shown in the formula:

$$S = TD \cdot S_{Old} + (1 - TD) \cdot S_{Calculated}$$

(Equation 381)

Where

S	is a new measured value to be used for the protection function
S_{old}	is the measured value given from the function in previous execution cycle
$S_{Calculated}$	is the new calculated value in the present execution cycle
TD	is settable parameter

The value of *k=0.92* is recommended in generator applications as the trip delay is normally quite long.

The calibration factors for current and voltage measurement errors are set % of rated current/voltage:

IMagComp5, IMagComp30, IMagComp100

VMagComp5, VMagComp30, VMagComp100

IMagComp5, IMagComp30, IMagComp100

The angle compensation is given as difference between current and voltage angle errors.

The values are given for operating points 5, 30 and 100% of rated current/voltage. The values should be available from instrument transformer test protocols.

3.7.11.3 Setting parameters

Table 114: GUPPDUP (37) Group settings (basic)

Name	Values (Range)	Unit	Step	Default	Description
Operation	Disabled Enabled	-	-	Disabled	Operation Disable / Enable
OpMode1	Disabled UnderPower	-	-	UnderPower	Operation mode 1
Power1	0.0 - 500.0	%SB	0.1	1.0	Power setting for stage 1 in % of Sbase
Angle1	-180.0 - 180.0	Deg	0.1	0.0	Angle for stage 1
TripDelay1	0.010 - 6000.000	s	0.001	1.000	Trip delay for stage 1
DropDelay1	0.010 - 6000.000	s	0.001	0.060	Drop delay for stage 1
OpMode2	Disabled UnderPower	-	-	UnderPower	Operation mode 2
Power2	0.0 - 500.0	%SB	0.1	1.0	Power setting for stage 2 in % of Sbase
Angle2	-180.0 - 180.0	Deg	0.1	0.0	Angle for stage 2
TripDelay2	0.010 - 6000.000	s	0.001	1.000	Trip delay for stage 2
DropDelay2	0.010 - 6000.000	s	0.001	0.060	Drop delay for stage 2

Table 115: GUPPDUP (37) Group settings (advanced)

Name	Values (Range)	Unit	Step	Default	Description
TD	0.000 - 0.999	-	0.001	0.000	Low pass filter coefficient for power measurement, P and Q
Hysteresis1	0.2 - 5.0	pu	0.1	0.5	Absolute hysteresis of stage 1 in % Sbase
Hysteresis2	0.2 - 5.0	pu	0.1	0.5	Absolute hysteresis of stage 2 in % Sbase

Table continues on next page

Name	Values (Range)	Unit	Step	Default	Description
IMagComp5	-10.000 - 10.000	%	0.001	0.000	Magnitude factor to calibrate current at 5% of In
IMagComp30	-10.000 - 10.000	%	0.001	0.000	Magnitude factor to calibrate current at 30% of In
IMagComp100	-10.000 - 10.000	%	0.001	0.000	Magnitude factor to calibrate current at 100% of In
VMagComp5	-10.000 - 10.000	%	0.001	0.000	Magnitude factor to calibrate voltage at 5% of Vn
VMagComp30	-10.000 - 10.000	%	0.001	0.000	Magnitude factor to calibrate voltage at 30% of Vn
VMagComp100	-10.000 - 10.000	%	0.001	0.000	Magnitude factor to calibrate voltage at 100% of Vn
IAngComp5	-10.000 - 10.000	Deg	0.001	0.000	Angle calibration for current at 5% of In
IAngComp30	-10.000 - 10.000	Deg	0.001	0.000	Angle calibration for current at 30% of In
IAngComp100	-10.000 - 10.000	Deg	0.001	0.000	Angle calibration for current at 100% of In

Table 116: GUPPDUP (37) Non group settings (basic)

Name	Values (Range)	Unit	Step	Default	Description
IBase	1 - 99999	A	1	3000	Base setting for current level
VBase	0.05 - 2000.00	kV	0.05	400.00	Base setting for voltage level
Mode	A, B, C Arone Pos Seq AB BC CA A B C	-	-	Pos Seq	Selection of measured current and voltage

3.7.12 Directional overpower protection GOPPDOP (32)

Function description	IEC 61850 identification	IEC 60617 identification	ANSI/IEEE C37.2 device number
Directional overpower protection	GOPPDOP	P > →	32

3.7.12.1 Application

The task of a generator in a power plant is to convert mechanical energy available as a torque on a rotating shaft to electric energy.

Sometimes, the mechanical power from a prime mover may decrease so much that it does not cover bearing losses and ventilation losses. Then, the synchronous generator becomes a synchronous motor and starts to take electric power from the rest of the power system. This operating state, where individual synchronous machines operate as motors, implies no risk for the machine itself. If the generator under consideration is very large and if it consumes lots of electric power, it may be desirable to disconnect it to ease the task for the rest of the power system.

Often, the motoring condition may imply that the turbine is in a very dangerous state. The task of the reverse power protection is to protect the turbine and not to protect the generator itself.

Steam turbines easily become overheated if the steam flow becomes too low or if the steam ceases to flow through the turbine. Therefore, turbo-generators should have reverse power protection. There are several contingencies that may cause reverse power: break of a main steam pipe, damage to one or more blades in the steam turbine or inadvertent closing of the main stop valves. In the last case, it is highly desirable to have a reliable reverse power protection. It may prevent damage to an otherwise undamaged plant.

During the routine shutdown of many thermal power units, the reverse power protection gives the tripping impulse to the generator breaker (the unit breaker). By doing so, one prevents the disconnection of the unit before the mechanical power has become zero. Earlier disconnection would cause an acceleration of the turbine generator at all routine shutdowns. This should have caused overspeed and high centrifugal stresses.

When the steam ceases to flow through a turbine, the cooling of the turbine blades will disappear. Now, it is not possible to remove all heat generated by the windage losses. Instead, the heat will increase the temperature in the steam turbine and especially of the blades. When a steam turbine rotates without steam supply, the electric power consumption will be about 2% of rated power. Even if the turbine rotates in vacuum, it will soon become overheated and damaged. The turbine overheats within minutes if the turbine loses the vacuum.

The critical time to overheating of a steam turbine varies from about 0.5 to 30 minutes depending on the type of turbine. A high-pressure turbine with small and thin blades will become overheated more easily than a low-pressure turbine with long and heavy blades. The conditions vary from turbine to turbine and it is necessary to ask the turbine manufacturer in each case.

Power to the power plant auxiliaries may come from a station service transformer connected to the primary side of the step-up transformer. Power may also come from a start-up service transformer connected to the external network. One has to design the reverse power protection so that it can detect reverse power independent of the flow of power to the power plant auxiliaries.

Hydro turbines tolerate reverse power much better than steam turbines do. Only Kaplan turbine and bulb turbines may suffer from reverse power. There is a risk that the turbine runner moves axially and touches stationary parts. They are not always strong enough to withstand the associated stresses.

Ice and snow may block the intake when the outdoor temperature falls far below zero. Branches and leaves may also block the trash gates. A complete blockage of the intake may cause cavitations. The risk for damages to hydro turbines can justify reverse power protection in unattended plants.

A hydro turbine that rotates in water with closed wicket gates will draw electric power from the rest of the power system. This power will be about 10% of the rated power. If there is only air in the hydro turbine, the power demand will fall to about 3%.

Diesel engines should have reverse power protection. The generator will take about 15% of its rated power or more from the system. A stiff engine may require perhaps 25% of the rated power to motor it. An engine that is well run in might need no more than 5%. It is necessary to obtain information from the engine manufacturer and to measure the reverse power during commissioning.

Gas turbines usually do not require reverse power protection.

Figure 219 illustrates the reverse power protection with underpower IED and with overpower IED. The underpower IED gives a higher margin and should provide better dependability. On the other hand, the risk for unwanted operation immediately after synchronization may be higher. One should set the underpower IED to trip if the active power from the generator is less than about 2%. One should set the overpower IED to trip if the power flow from the network to the generator is higher than 1%.

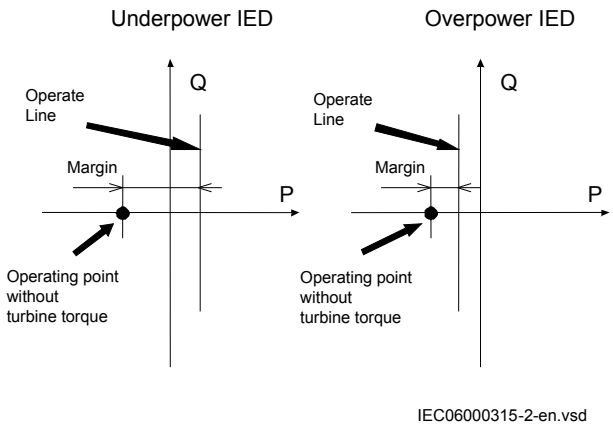

Figure 219: Reverse power protection with underpower IED and overpower IED

3.7.12.2 Setting guidelines

Operation: With the parameter *Operation* the function can be set *Enabled*/*Disabled*.

IBase: The parameter *IBase* is set to the generator rated current in A, see equation 382.

$$IBase = \frac{S_N}{\sqrt{3} \cdot V_N}$$

(Equation 382)

VBase: The parameter *VBase* is set to the generator rated voltage (phase-phase) in kV.

Mode: The voltage and current used for the power measurement. The setting possibilities are shown in table 117.

Table 117: Complex power calculation

Set value *Mode*	Formula used for complex power calculation
A,B,C	$\bar{S} = \bar{V}_A \cdot \bar{I}_A^* + \bar{V}_B \cdot \bar{I}_B^* + \bar{V}_C \cdot \bar{I}_C^*$ (Equation 383)
Arone	$\bar{S} = \bar{V}_{AB} \cdot \bar{I}_A^* - \bar{V}_{BC} \cdot \bar{I}_C^*$ (Equation 384)
PosSeq	$\bar{S} = 3 \cdot \bar{V}_{PosSeq} \cdot \bar{I}_{PosSeq}^*$ (Equation 385)
Table continues on next page	

Set value *Mode*	Formula used for complex power calculation
A,B	$\bar{S} = \overline{V}_{AB} \cdot (\bar{I}_A^* - \bar{I}_B^*)$ (Equation 386)
B,C	$\bar{S} = \overline{V}_{BC} \cdot (\bar{I}_B^* - \bar{I}_C^*)$ (Equation 387)
C,A	$\bar{S} = \overline{V}_{CA} \cdot (\bar{I}_C^* - \bar{I}_A^*)$ (Equation 388)
A	$\bar{S} = 3 \cdot \overline{V}_A \cdot \bar{I}_A^*$ (Equation 389)
B	$\bar{S} = 3 \cdot \overline{V}_B \cdot \bar{I}_B^*$ (Equation 390)
C	$\bar{S} = 3 \cdot \overline{V}_C \cdot \bar{I}_C^*$ (Equation 391)

The function has two stages that can be set independently.

With the parameter *OpMode1(2)* the function can be set *Enabled*/*Disabled*.

The function gives trip if the power component in the direction defined by the setting *Angle1(2)* is larger than the set pick up power value *Power1(2)*

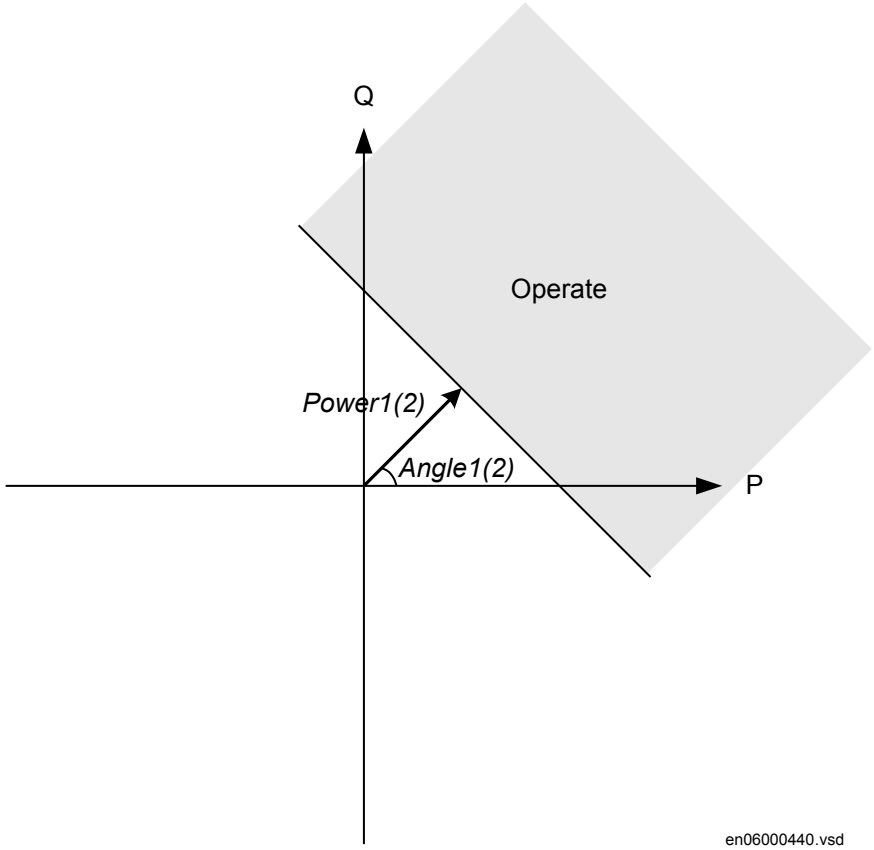

Figure 220: Overpower mode

The setting *Power1(2)* gives the power component pick up value in the *Angle1(2)* direction. The setting is given in p.u. of the generator rated power, see equation 392.

Minimum recommended setting is 0.2% of S_N when metering class CT inputs into the IED are used.

$$S_N = \sqrt{3} \cdot VBase \cdot IBase$$

(Equation 392)

The setting *Angle1(2)* gives the characteristic angle giving maximum sensitivity of the power protection function. The setting is given in degrees. For active power the set angle should be 0° or 180°. 180° should be used for generator reverse power protection.

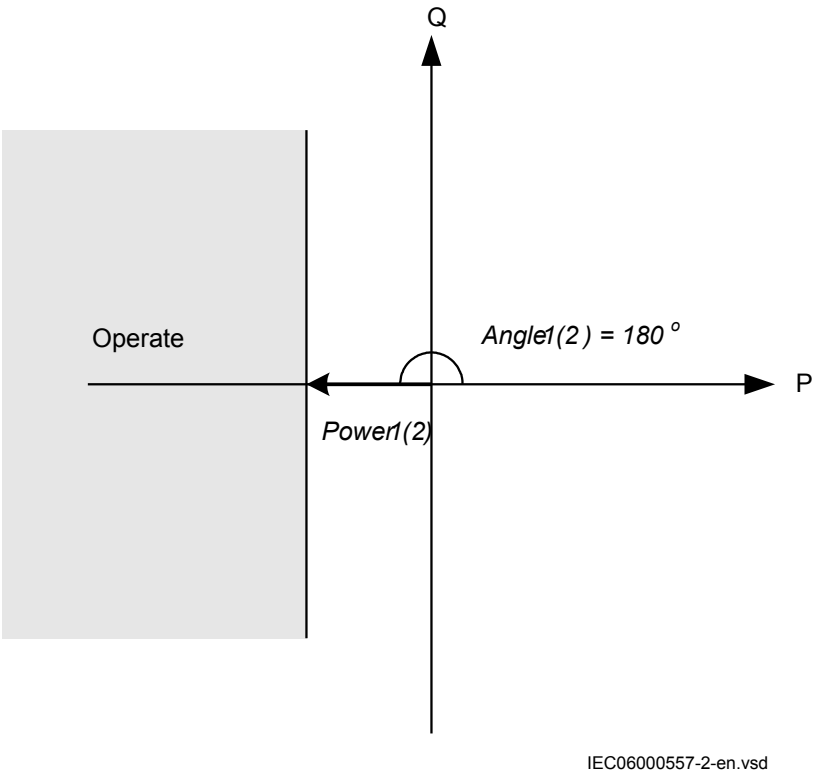

Figure 221: For reverse power the set angle should be 180° in the overpower function

TripDelay1(2) is set in seconds to give the time delay for trip of the stage after pick up.

Hysteresis1(2) is given in p.u. of generator rated power according to equation 393.

$$S_N = \sqrt{3} \cdot VBase \cdot IBase$$

(Equation 393)

The drop out power will be *Power1(2) - Hysteresis1(2)*.

The possibility to have low pass filtering of the measured power can be made as shown in the formula:

$$S = TD \cdot S_{Old} + (1 - TD) \cdot S_{Calculated}$$

(Equation 394)

Where	
S	is a new measured value to be used for the protection function
S_{old}	is the measured value given from the function in previous execution cycle
$S_{Calculated}$	is the new calculated value in the present execution cycle
TD	is settable parameter

The value of *TD=0.92* is recommended in generator applications as the trip delay is normally quite long.

The calibration factors for current and voltage measurement errors are set % of rated current/voltage:

IMagComp5, IMagComp30, IMagComp100

VMagComp5, VMagComp30, VMagComp100

IAngComp5, IAngComp30, IAngComp100

The angle compensation is given as difference between current and voltage angle errors.

The values are given for operating points 5, 30 and 100% of rated current/voltage. The values should be available from instrument transformer test protocols.

3.7.12.3 Setting parameters

Table 118: GOPPDOP (32) Group settings (basic)

Name	Values (Range)	Unit	Step	Default	Description
Operation	Disabled Enabled	-	-	Disabled	Operation Disable / Enable
OpMode1	Disabled OverPower	-	-	OverPower	Operation mode 1
Power1	0.0 - 500.0	%SB	0.1	120.0	Power setting for stage 1 in % of Sbase
Angle1	-180.0 - 180.0	Deg	0.1	0.0	Angle for stage 1
TripDelay1	0.010 - 6000.000	s	0.001	1.000	Trip delay for stage 1
DropDelay1	0.010 - 6000.000	s	0.001	0.060	Drop delay for stage 1
OpMode2	Disabled OverPower	-	-	OverPower	Operation mode 2
Power2	0.0 - 500.0	%SB	0.1	120.0	Power setting for stage 2 in % of Sbase

Table continues on next page

Name	Values (Range)	Unit	Step	Default	Description
Angle2	-180.0 - 180.0	Deg	0.1	0.0	Angle for stage 2
TripDelay2	0.010 - 6000.000	s	0.001	1.000	Trip delay for stage 2
DropDelay2	0.010 - 6000.000	s	0.001	0.060	Drop delay for stage 2

Table 119: GOPPDOP (32) Group settings (advanced)

Name	Values (Range)	Unit	Step	Default	Description
k	0.000 - 0.999	-	0.001	0.000	Low pass filter coefficient for power measurement, P and Q
Hysteresis1	0.2 - 5.0	pu	0.1	0.5	Absolute hysteresis of stage 1 in % of Sbase
Hysteresis2	0.2 - 5.0	pu	0.1	0.5	Absolute hysteresis of stage 2 in % of Sbase
IMagComp5	-10.000 - 10.000	%	0.001	0.000	Magnitude factor to calibrate current at 5% of In
IMagComp30	-10.000 - 10.000	%	0.001	0.000	Magnitude factor to calibrate current at 30% of In
IMagComp100	-10.000 - 10.000	%	0.001	0.000	Magnitude factor to calibrate current at 100% of In
VMagComp5	-10.000 - 10.000	%	0.001	0.000	Magnitude factor to calibrate voltage at 5% of Vn
VMagComp30	-10.000 - 10.000	%	0.001	0.000	Magnitude factor to calibrate voltage at 30% of Vn
VMagComp100	-10.000 - 10.000	%	0.001	0.000	Magnitude factor to calibrate voltage at 100% of Vn
IAngComp5	-10.000 - 10.000	Deg	0.001	0.000	Angle calibration for current at 5% of In
IAngComp30	-10.000 - 10.000	Deg	0.001	0.000	Angle calibration for current at 30% of In
IAngComp100	-10.000 - 10.000	Deg	0.001	0.000	Angle calibration for current at 100% of In

Table 120: GOPPDOP (32) Non group settings (basic)

Name	Values (Range)	Unit	Step	Default	Description
IBase	1 - 99999	A	1	3000	Base setting for current level
VBase	0.05 - 2000.00	kV	0.05	400.00	Base setting for voltage level
Mode	A, B, C Arone Pos Seq AB BC CA A B C	-	-	Pos Seq	Selection of measured current and voltage

3.7.13 Broken conductor check BRCPTOC (46)

Function description	IEC 61850 identification	IEC 60617 identification	ANSI/IEEE C37.2 device number
Broken conductor check	BRCPTOC	-	46

3.7.13.1 Application

Conventional protection functions can not detect the broken conductor condition. Broken conductor check (BRCPTOC, 46) function, consisting of continuous current unsymmetrical check on the line where the IED connected will give alarm or trip at detecting broken conductors.

3.7.13.2 Setting guidelines

Broken conductor check BRCPTOC (46) must be set to detect open phase/s (series faults) with different loads on the line. BRCPTOC (46) must at the same time be set to not operate for maximum asymmetry which can exist due to, for example, not transposed power lines.

All settings are in primary values or percentage.

Set *IBase* to power line rated current or CT rated current.

Set minimum operating level per phase *Pickup_PH* to typically 10-20% of rated current.

Set the unsymmetrical current, which is relation between the difference of the minimum and maximum phase currents to the maximum phase current to typical *Pickup_ub = 50%*.

Note that it must be set to avoid problem with asymmetry under minimum operating conditions.

Set the time delay *tOper = 5 - 60* seconds and reset time *tReset = 0.010 - 60.000* seconds.

3.7.13.3 Setting parameters

Table 121: BRCPTOC (46) Group settings (basic)

Name	Values (Range)	Unit	Step	Default	Description
Operation	Disabled Enabled	-	-	Disabled	Operation Disable / Enable
IBase	0 - 99999	A	1	3000	IBase
Pickup_ub	50 - 90	%IM	1	50	Unbalance current operation value in percent of max current
Pickup_PH	5 - 100	%IB	1	20	Minimum phase current for operation of pickup_ub> in % of Ibase
tOper	0.000 - 60.000	s	0.001	5.000	Operate time delay

Table 122: BRCPTOC (46) Group settings (advanced)

Name	Values (Range)	Unit	Step	Default	Description
tReset	0.010 - 60.000	s	0.001	0.100	Time delay in reset

3.8 Voltage protection

3.8.1 Two step undervoltage protection UV2PTUV (27)

Function description	IEC 61850 identification	IEC 60617 identification	ANSI/IEEE C37.2 device number
Two step undervoltage protection	UV2PTUV	*3U<*	27

3.8.1.1 Application

Two-step undervoltage protection function (UV2PTUV ,27) is applicable in all situations, where reliable detection of low phase voltages is necessary. It is used also as a supervision and fault detection function for other protection functions, to increase the security of a complete protection system.

UV2PTUV (27) is applied to power system elements, such as generators, transformers, motors and power lines in order to detect low voltage conditions. Low voltage conditions are caused by abnormal operation or fault in the power system. UV2PTUV (27) is used in combination with overcurrent protections, either as restraint or in logic

"and gates" of the trip signals issued by the two functions. Other applications are the detection of "no voltage" condition, for example, before the energization of a HV line or for automatic breaker trip in case of a blackout. UV2PTUV (27) is also used to initiate voltage correction measures, like insertion of shunt capacitor banks to compensate for reactive load and thereby increasing the voltage. The function has a high measuring accuracy and setting hysteresis to allow applications to control reactive load.

UV2PTUV (27) is used to disconnect apparatuses, like electric motors, which will be damaged when subject to service under low voltage conditions. UV2PTUV (27) deals with low voltage conditions at power system frequency, which can be caused by the following reasons:

1. Malfunctioning of a voltage regulator or wrong settings under manual control (symmetrical voltage decrease).
2. Overload (symmetrical voltage decrease).
3. Short circuits, often as phase-to-ground faults (unsymmetrical voltage decrease).

UV2PTUV (27) prevents sensitive equipment from running under conditions that could cause their overheating and thus shorten their life time expectancy. In many cases, it is a useful function in circuits for local or remote automation processes in the power system.

3.8.1.2 Setting guidelines

All the voltage conditions in the system where UV2PTUV (27) performs its functions should be considered. The same also applies to the associated equipment, its voltage and time characteristic.

There is a very wide application area where general undervoltage functions are used. All voltage related settings are made as a percentage of the settings base voltage *VBase* and base current *IBase*, which normally is set to the primary rated voltage level (phase-to-phase) of the power system or the high voltage equipment under consideration.

The setting for UV2PTUV (27) is normally not critical, since there must be enough time available for the main protection to clear short circuits andground faults.

Some applications and related setting guidelines for the voltage level are described in the following sections.

Equipment protection, such as for motors and generators

The setting must be below the lowest occurring "normal" voltage and above the lowest acceptable voltage for the equipment.

Disconnected equipment detection

The setting must be below the lowest occurring "normal" voltage and above the highest occurring voltage, caused by inductive or capacitive coupling, when the equipment is disconnected.

Power supply quality

The setting must be below the lowest occurring "normal" voltage and above the lowest acceptable voltage, due to regulation, good practice or other agreements.

Voltage instability mitigation

This setting is very much dependent on the power system characteristics, and thorough studies have to be made to find the suitable levels.

Backup protection for power system faults

The setting must be below the lowest occurring "normal" voltage and above the highest occurring voltage during the fault conditions under consideration.

Settings for Two step undervoltage protection

The following settings can be done for Two step undervoltage protection UV2PTUV (27):

ConnType: Sets whether the measurement shall be phase-to-ground fundamental value, phase-to-phase fundamental value, phase-to-ground RMS value or phase-to-phase RMS value.

Operation: *Disabled* or *Enabled*.

VBase: Base voltage phase-to-phase in primary kV. This voltage is used as reference for voltage setting. UV2PTUV (27) measures selectively phase-to-ground voltages, or phase-to-phase voltage chosen by the setting *ConnType*. The function will operate if the voltage gets lower than the set percentage of *VBase*. When *ConnType* is set to *PhN DFT* or *PhN RMS* then the IED automatically divides set value for *VBase* by √3. *VBase* is used when *ConnType* is set to *PhPh DFT* or *PhPh RMS*. Therefore, always set *VBase* as rated primary phase-to-phase voltage of the protected object. This means operation for phase-to-ground voltage under:

$$V < (\%) \cdot VBase(kV) \Big/ \sqrt{3}$$

(Equation 395)

and operation for phase-to-phase voltage under:

$$\mathrm{Vpickup} < (\%) \cdot \mathrm{VBase(kV)}$$

(Equation 396)

The below described setting parameters are identical for the two steps (*n* = 1 or 2). Therefore, the setting parameters are described only once.

Characteristicn: This parameter gives the type of time delay to be used. The setting can be *Definite time*, *Inverse Curve A*, *Inverse Curve B*, *Prog. inv. curve*. The selection is dependent on the protection application.

OpModen: This parameter describes how many of the three measured voltages that should be below the set level to give operation for step n. The setting can be *1 out of 3*, *2 out of 3* or *3 out of 3*. In most applications, it is sufficient that one phase voltage is low to give operation. If UV2PTUV (27) shall be insensitive for single phase-to-ground faults, *2 out of 3* can be chosen. In subtransmission and transmission networks the undervoltage function is mainly a system supervision function and 3 out of 3 is selected.

Pickupn: Set operate undervoltage operation value for step *n*, given as % of the parameter *VBase*. The setting is highly dependent of the protection application. It is essential to consider the minimum voltage at non-faulted situations. Normally this voltage is larger than 90% of nominal voltage.

tn: time delay of step *n*, given in s. This setting is dependent of the protection application. In many applications the protection function shall not directly trip when there is a short circuit or ground faults in the system. The time delay must be coordinated to the short circuit protections.

tResetn: Reset time for step *n* if definite time delay is used, given in s. The default value is 25 ms.

tnMin: Minimum operation time for inverse time characteristic for step *n*, given in s. When using inverse time characteristic for the undervoltage function during very low voltages can give a short operation time. This might lead to unselective trip. By setting *t1Min* longer than the operation time for other protections such unselective tripping can be avoided.

ResetTypeCrvn: This parameter for inverse time characteristic can be set to *Instantaneous*, *Frozen time*, *Linearly decreased*. The default setting is*Instantaneous*.

tIResetn: Reset time for step *n* if inverse time delay is used, given in s. The default value is 25 ms.

TDn: Time multiplier for inverse time characteristic. This parameter is used for coordination between different inverse time delayed undervoltage protections.

ACrvn, *BCrvn*, *CCrvn*, *DCrvn*, *PCrvn*: Parameters to set to create programmable under voltage inverse time characteristic. Description of this can be found in the technical reference manual.

CrvSatn: When the denominator in the expression of the programmable curve is equal to zero the time delay will be infinity. There will be an undesired discontinuity. Therefore, a tuning parameter *CrvSatn* is set to compensate for this phenomenon. In the voltage interval Pickup> down to *Pickup*> · (1.0 - *CrvSatn*/100) the used voltage will be: *Pickup*> · (1.0 - *CrvSatn*/100). If the programmable curve is used this parameter must be calculated so that:

$$B \cdot \frac{CrvSatn}{100} - C > 0$$

(Equation 397)

IntBlkSeln: This parameter can be set to *Disabled*, *Block of trip*, *Block all*. In case of a low voltage the undervoltage function can be blocked. This function can be used to prevent function when the protected object is switched off. If the parameter is set *Block of trip* or *Block all* unwanted trip is prevented.

IntBlkStValn: Voltage level under which the blocking is activated set in % of *VBase*. This setting must be lower than the setting *Pickupn*. As switch of shall be detected the setting can be very low, that is, about 10%.

tBlkUVn: Time delay to block the undervoltage step *n* when the voltage level is below *IntBlkStValn*, given in s. It is important that this delay is shorter than the operate time delay of the undervoltage protection step.

3.8.1.3 Setting parameters

Table 123: UV2PTUV (27) Group settings (basic)

Name	Values (Range)	Unit	Step	Default	Description
Operation	Disabled Enabled	-	-	Disabled	Disable/Enable Operation
VBase	0.05 - 2000.00	kV	0.05	400.00	Base voltage
OperationStep1	Disabled Enabled	-	-	Enabled	Enable execution of step 1
Characterist1	Definite time Inverse curve A Inverse curve B Prog. inv. curve	-	-	Definite time	Selection of time delay curve type for step 1
OpMode1	1 out of 3 2 out of 3 3 out of 3	-	-	1 out of 3	Number of phases required for op (1 of 3, 2 of 3, 3 of 3) from step 1
Pickup1	1 - 100	%VB	1	70	Voltage pickup value (Definite-Time & Inverse-Time curve) in % of VBase, step 1
t1	0.00 - 6000.00	s	0.01	5.00	Definitive time delay of step 1
t1Min	0.000 - 60.000	s	0.001	5.000	Minimum operate time for inverse curves for step 1

Table continues on next page

Name	Values (Range)	Unit	Step	Default	Description
TD1	0.05 - 1.10	-	0.01	0.05	Time multiplier for the inverse time delay for step 1
IntBlkSel1	Disabled Block of trip Block all	-	-	Disabled	Internal (low level) blocking mode, step 1
IntBlkStVal1	1 - 100	%VB	1	20	Voltage setting for internal blocking in % of VBase, step 1
tBlkUV1	0.000 - 60.000	s	0.001	0.000	Time delay of internal (low level) blocking for step 1
HystAbs1	0.0 - 100.0	%VB	0.1	0.5	Absolute hysteresis in % of VBase, step 1
OperationStep2	Disabled Enabled	-	-	Enabled	Enable execution of step 2
Characterist2	Definite time Inverse curve A Inverse curve B Prog. inv. curve	-	-	Definite time	Selection of time delay curve type for step 2
OpMode2	1 out of 3 2 out of 3 3 out of 3	-	-	1 out of 3	Number of phases required for op (1 of 3, 2 of 3, 3 of 3) from step 2
Pickup2	1 - 100	%VB	1	50	Voltage pickup value (Definite-Time & Inverse-Time curve) in % of VBase, step 2
t2	0.000 - 60.000	s	0.001	5.000	Definitive time delay of step 2
t2Min	0.000 - 60.000	s	0.001	5.000	Minimum operate time for inverse curves for step 2
TD2	0.05 - 1.10	-	0.01	0.05	Time multiplier for the inverse time delay for step 2
IntBlkSel2	Disabled Block of trip Block all	-	-	Disabled	Internal (low level) blocking mode, step 2
IntBlkStVal2	1 - 100	%VB	1	20	Voltage setting for internal blocking in % of VBase, step 2
tBlkUV2	0.000 - 60.000	s	0.001	0.000	Time delay of internal (low level) blocking for step 2
HystAbs2	0.0 - 100.0	%VB	0.1	0.5	Absolute hysteresis in % of VBase, step 2

Table 124: UV2PTUV (27) Group settings (advanced)

Name	Values (Range)	Unit	Step	Default	Description
tReset1	0.000 - 60.000	s	0.001	0.025	Reset time delay used in IEC Definite Time curve step 1
ResetTypeCrv1	Instantaneous Frozen timer Linearly decreased	-	-	Instantaneous	Selection of used IDMT reset curve type for step 1
tIReset1	0.000 - 60.000	s	0.001	0.025	Time delay in Inverse-Time reset (s), step 1

Table continues on next page

Name	Values (Range)	Unit	Step	Default	Description
ACrv1	0.005 - 200.000	-	0.001	1.000	Parameter A for customer programmable curve for step 1
BCrv1	0.50 - 100.00	-	0.01	1.00	Parameter B for customer programmable curve for step 1
CCrv1	0.0 - 1.0	-	0.1	0.0	Parameter C for customer programmable curve for step 1
DCrv1	0.000 - 60.000	-	0.001	0.000	Parameter D for customer programmable curve for step 1
PCrv1	0.000 - 3.000	-	0.001	1.000	Parameter P for customer programmable curve for step 1
CrvSat1	0 - 100	%	1	0	Tuning param for prog. under voltage Inverse-Time curve, step 1
tReset2	0.000 - 60.000	s	0.001	0.025	Reset time delay used in IEC Definite Time curve step 2
ResetTypeCrv2	Instantaneous Frozen timer Linearly decreased	-	-	Instantaneous	Selection of Time Delay reset curve for step 2
tIReset2	0.000 - 60.000	s	0.001	0.025	Time delay in Inverse-Time reset (s), step 2
ACrv2	0.005 - 200.000	-	0.001	1.000	Parameter A for customer programmable curve for step 2
BCrv2	0.50 - 100.00	-	0.01	1.00	Parameter B for customer programmable curve for step 2
CCrv2	0.0 - 1.0	-	0.1	0.0	Parameter C for customer programmable curve for step 2
DCrv2	0.000 - 60.000	-	0.001	0.000	Parameter D for customer programmable curve for step 2
PCrv2	0.000 - 3.000	-	0.001	1.000	Parameter P for customer programmable curve for step 2
CrvSat2	0 - 100	%	1	0	Tuning param for prog. under voltage Inverse-Time curve, step 2

Table 125: UV2PTUV (27) Non group settings (basic)

Name	Values (Range)	Unit	Step	Default	Description
ConnType	PhN DFT PhPh RMS PhN RMS PhPh DFT	-	-	PhN DFT	Group selector for connection type

3.8.2 Two step overvoltage protection OV2PTOV (59)

Function description	IEC 61850 identification	IEC 60617 identification	ANSI/IEEE C37.2 device number
Two step overvoltage protection	OV2PTOV	3U>	59

3.8.2.1 Application

Two step overvoltage protection OV2PTOV (59) is applicable in all situations, where reliable detection of high voltage is necessary. OV2PTOV (59) is used for supervision and detection of abnormal conditions, which, in combination with other protection functions, increase the security of a complete protection system.

High overvoltage conditions are caused by abnormal situations in the power system. OV2PTOV (59) is applied to power system elements, such as generators, transformers, motors and power lines in order to detect high voltage conditions. OV2PTOV (59) is used in combination with low current signals, to identify a transmission line, open in the remote end. In addition to that, OV2PTOV (59) is also used to initiate voltage correction measures, like insertion of shunt reactors, to compensate for low load, and thereby decreasing the voltage. The function has a high measuring accuracy and hysteresis setting to allow applications to control reactive load.

OV2PTOV (59) is used to disconnect apparatuses, like electric motors, which will be damaged when subject to service under high voltage conditions. It deals with high voltage conditions at power system frequency, which can be caused by:

1. Different kinds of faults, where a too high voltage appears in a certain power system, like metallic connection to a higher voltage level (broken conductor falling down to a crossing overhead line, transformer flash over fault from the high voltage winding to the low voltage winding and so on).
2. Malfunctioning of a voltage regulator or wrong settings under manual control (symmetrical voltage decrease).
3. Low load compared to the reactive power generation (symmetrical voltage decrease).
4. Ground-faults in high impedance grounded systems causes, beside the high voltage in the neutral, high voltages in the two non-faulted phases, (unsymmetrical voltage increase).

OV2PTOV (59) prevents sensitive equipment from running under conditions that could cause their overheating or stress of insulation material, and, thus, shorten their life time expectancy. In many cases, it is a useful function in circuits for local or remote automation processes in the power system.

3.8.2.2 Setting guidelines

The parameters for Two step overvoltage protection (OV2PTOV ,59) are set via the local HMI or PCM600.

All the voltage conditions in the system where OV2PTOV (59) performs its functions should be considered. The same also applies to the associated equipment, its voltage and time characteristic.

There is a very wide application area where general overvoltage functions are used. All voltage related settings are made as a percentage of a settable base primary voltage, which normally is set to the nominal voltage level (phase-to-phase) of the power system or the high voltage equipment under consideration.

The time delay for the OV2PTOV (59) can sometimes be critical and related to the size of the overvoltage - a power system or a high voltage component can withstand smaller overvoltages for some time, but in case of large overvoltages the related equipment should be disconnected more rapidly.

Some applications and related setting guidelines for the voltage level are given below:

The hysteresis is for overvoltage functions very important to prevent that a transient voltage over set level is not “sealed-in” due to a high hysteresis. Typical values should be ≤ 0.5%.

Equipment protection, such as for motors, generators, reactors and transformers

High voltage will cause overexcitation of the core and deteriorate the winding insulation. The setting has to be well above the highest occurring "normal" voltage and well below the highest acceptable voltage for the equipment.

Equipment protection, capacitors

High voltage will deteriorate the dielectricum and the insulation. The setting has to be well above the highest occurring "normal" voltage and well below the highest acceptable voltage for the capacitor.

Power supply quality

The setting has to be well above the highest occurring "normal" voltage and below the highest acceptable voltage, due to regulation, good practice or other agreements.

High impedance grounded systems

In high impedance grounded systems, ground-faults cause a voltage increase in the non-faulty phases. Two step overvoltage protection (OV2PTOV, 59) is used to detect such faults. The setting must be above the highest occurring "normal" voltage and below the lowest occurring voltage during faults. A metallic single-phase ground-fault causes the non-faulted phase voltages to increase a factor of √3.

The following settings can be done for the two step overvoltage protection

ConnType: Sets whether the measurement shall be phase-to-ground fundamental value, phase-to-phase fundamental value, phase-to-ground RMS value or phase-to-phase RMS value.

Operation: *Disabled*/*Enabled*.

VBase: Base voltage phase to phase in primary kV. This voltage is used as reference for voltage setting. OV2PTOV (59) measures selectively phase-to-ground voltages, or phase-to-phase voltage chosen by the setting *ConnType*. The function will operate if the voltage gets lower than the set percentage of *VBase*. When *ConnType* is set to *PhN DFT* or *PhN RMS* then the IED automatically divides set value for *VBase* by √3. When *ConnType* is set to *PhPh DFT* or *PhPh RMS* then set value for *VBase* is used. Therefore, always set *VBase* as rated primary phase-to-phase ground voltage of the protected object. If phase to neutral (PhN) measurement is selected as setting, the operation of phase-to-earth over voltage is automatically divided by sqrt3. This means operation for phase-to-ground voltage over:

$$V > (\%) \cdot VBase(kV) / \sqrt{3}$$

(Equation 398)

and operation for phase-to-phase voltage over:

$$\text{Vpickup} > (\%) \cdot \text{VBase(kV)}$$

(Equation 399)

The below described setting parameters are identical for the two steps (n = 1 or 2). Therefore the setting parameters are described only once.

Characteristicn: This parameter gives the type of time delay to be used. The setting can be *Definite time*, *Inverse Curve A*, *Inverse Curve B*, *Inverse Curve C* or *I/Prog. inv. curve*. The choice is highly dependent of the protection application.

OpModen: This parameter describes how many of the three measured voltages that should be above the set level to give operation. The setting can be *1 out of 3*, *2 out of 3*, *3 out of 3*. In most applications it is sufficient that one phase voltage is high to give operation. If the function shall be insensitive for single phase-to-ground faults *1 out of 3* can be chosen, because the voltage will normally rise in the non-faulted phases at single phase-to-ground faults. In subtransmission and transmission networks the UV function is mainly a system supervision function and 3 out of 3 is selected.

Pickupn: Set operate overvoltage operation value for step *n*, given as % of *VBase*. The setting is highly dependent of the protection application. Here it is essential to consider the maximum voltage at non-faulted situations. Normally this voltage is less than 110% of nominal voltage.

tn: time delay of step *n*, given in s. The setting is highly dependent of the protection application. In many applications the protection function is used to prevent damages to the protected object. The speed might be important for example in case of protection of transformer that might be overexcited. The time delay must be co-ordinated with other automated actions in the system.

tResetn: Reset time for step *n* if definite time delay is used, given in s. The default value is 25 ms.

tnMin: Minimum operation time for inverse time characteristic for step *n*, given in s. For very high voltages the overvoltage function, using inverse time characteristic, can give very short operation time. This might lead to unselective trip. By setting *t1Min* longer than the operation time for other protections such unselective tripping can be avoided.

ResetTypeCrvn: This parameter for inverse time characteristic can be set: *Instantaneous*, *Frozen time*, *Linearly decreased*. The default setting is *Instantaneous*.

tIResetn: Reset time for step *n* if inverse time delay is used, given in s. The default value is 25 ms.

TDn: Time multiplier for inverse time characteristic. This parameter is used for co-ordination between different inverse time delayed undervoltage protections.

ACrvn, *BCrvn*, *CCrvn*, *DCrvn*, *PCrvn*: Parameters to set to create programmable under voltage inverse time characteristic. Description of this can be found in the technical reference manual.

CrvSatn: When the denominator in the expression of the programmable curve is equal to zero the time delay will be infinity. There will be an undesired discontinuity. Therefore a tuning parameter *CrvSatn* is set to compensate for this phenomenon. In the voltage interval *Pickup*> up to *Pickup*> · (1.0 + *CrvSatn*/100) the used voltage will be: *Pickup*> · (1.0 + *CrvSatn*/100). If the programmable curve is used, this parameter must be calculated so that:

$$B \cdot \frac{CrvSatn}{100} - C > 0$$

(Equation 400)

HystAbsn: Absolute hysteresis set in % of *VBase*. The setting of this parameter is highly dependent of the application. If the function is used as control for automatic switching of reactive compensation devices the hysteresis must be set smaller than the voltage change after switching of the compensation device.

3.8.2.3 Setting parameters

Table 126: OV2PTOV (59) Group settings (basic)

Name	Values (Range)	Unit	Step	Default	Description
Operation	Disabled Enabled	-	-	Disabled	Disable/Enable Operation
VBase	0.05 - 2000.00	kV	0.05	400.00	Base voltage
OperationStep1	Disabled Enabled	-	-	Enabled	Enable execution of step 1
Characterist1	Definite time Inverse curve A Inverse curve B Inverse curve C Prog. inv. curve	-	-	Definite time	Selection of time delay curve type for step 1
OpMode1	1 out of 3 2 out of 3 3 out of 3	-	-	1 out of 3	Number of phases required for op (1 of 3, 2 of 3, 3 of 3) from step 1
Pickup1	1 - 200	%VB	1	120	Voltage pickup value (Definite-Time & Inverse-Time curve) in % of VBase, step 1
t1	0.00 - 6000.00	s	0.01	5.00	Definitive time delay of step 1
t1Min	0.000 - 60.000	s	0.001	5.000	Minimum operate time for inverse curves for step 1
TD1	0.05 - 1.10	-	0.01	0.05	Time multiplier for the inverse time delay for step 1
HystAbs1	0.0 - 100.0	%VB	0.1	0.5	Absolute hysteresis in % of VBase, step 1
OperationStep2	Disabled Enabled	-	-	Enabled	Enable execution of step 2
Characterist2	Definite time Inverse curve A Inverse curve B Inverse curve C Prog. inv. curve	-	-	Definite time	Selection of time delay curve type for step 2
OpMode2	1 out of 3 2 out of 3 3 out of 3	-	-	1 out of 3	Number of phases required for op (1 of 3, 2 of 3, 3 of 3) from step 2
Pickup2	1 - 200	%VB	1	150	Voltage pickup value (Definite-Time & Inverse-Time curve) in % of VBase, step 2
t2	0.000 - 60.000	s	0.001	5.000	Definitive time delay of step 2
t2Min	0.000 - 60.000	s	0.001	5.000	Minimum operate time for inverse curves for step 2
TD2	0.05 - 1.10	-	0.01	0.05	Time multiplier for the inverse time delay for step 2
HystAbs2	0.0 - 100.0	%VB	0.1	0.5	Absolute hysteresis in % of VBase, step 2

Table 127: OV2PTOV (59) Group settings (advanced)

Name	Values (Range)	Unit	Step	Default	Description
tReset1	0.000 - 60.000	s	0.001	0.025	Reset time delay used in IEC Definite Time curve step 1
ResetTypeCrv1	Instantaneous Frozen timer Linearly decreased	-	-	Instantaneous	Selection of used IDMT reset curve type for step 1
tIReset1	0.000 - 60.000	s	0.001	0.025	Time delay in Inverse-Time reset (s), step 1
ACrv1	0.005 - 200.000	-	0.001	1.000	Parameter A for customer programmable curve for step 1
BCrv1	0.50 - 100.00	-	0.01	1.00	Parameter B for customer programmable curve for step 1
CCrv1	0.0 - 1.0	-	0.1	0.0	Parameter C for customer programmable curve for step 1
DCrv1	0.000 - 60.000	-	0.001	0.000	Parameter D for customer programmable curve for step 1
PCrv1	0.000 - 3.000	-	0.001	1.000	Parameter P for customer programmable curve for step 1
CrvSat1	0 - 100	%	1	0	Tuning param for programmable over voltage TOV curve, step 1
tReset2	0.000 - 60.000	s	0.001	0.025	Reset time delay used in IEC Definite Time curve step 2
ResetTypeCrv2	Instantaneous Frozen timer Linearly decreased	-	-	Instantaneous	Selection of Time Delay reset curve for step 2
tIReset2	0.000 - 60.000	s	0.001	0.025	Time delay in Inverse-Time reset (s), step 2
ACrv2	0.005 - 200.000	-	0.001	1.000	Parameter A for customer programmable curve for step 2
BCrv2	0.50 - 100.00	-	0.01	1.00	Parameter B for customer programmable curve for step 2
CCrv2	0.0 - 1.0	-	0.1	0.0	Parameter C for customer programmable curve for step 2
DCrv2	0.000 - 60.000	-	0.001	0.000	Parameter D for customer programmable curve for step 2
PCrv2	0.000 - 3.000	-	0.001	1.000	Parameter P for customer programmable curve for step 2
CrvSat2	0 - 100	%	1	0	Tuning param for programmable over voltage TOV curve, step 2

Table 128: OV2PTOV (59) Non group settings (basic)

Name	Values (Range)	Unit	Step	Default	Description
ConnType	PhN DFT PhPh DFT PhN RMS PhPh RMS	-	-	PhN DFT	Group selector for connection type

3.8.3 Two step residual overvoltage protection ROV2PTOV (59N)

Function description	IEC 61850 identification	IEC 60617 identification	ANSI/IEEE C37.2 device number
Two step residual overvoltage protection	ROV2PTOV	3U0	59N

3.8.3.1 Application

Two step residual overvoltage protection ROV2PTOV (59N) is primarily used in high impedance grounded distribution networks, mainly as a backup for the primary ground fault protection of the feeders and the transformer. To increase the security for different ground fault related functions, the residual overvoltage signal can be used as a release signal. The residual voltage can be measured either at the transformer neutral or from a voltage transformer open delta connection. The residual voltage can also be calculated internally, based on measurement of the three-phase voltages.

In high impedance grounded systems the residual voltage will increase in case of any fault connected to ground. Depending on the type of fault and fault resistance the residual voltage will reach different values. The highest residual voltage, equal to three times the phase-to-ground voltage, is achieved for a single phase-to-ground fault. The residual voltage increases approximately to the same level in the whole system and does not provide any guidance in finding the faulted component. Therefore, ROV2PTOV (59N) is often used as a backup protection or as a release signal for the feeder ground fault protection.

3.8.3.2 Setting guidelines

All the voltage conditions in the system where ROV2PTOV (59N) performs its functions should be considered. The same also applies to the associated equipment, its voltage and time characteristic.

There is a very wide application area where general single input or residual overvoltage functions are used. All voltage related settings are made as a percentage of a settable base voltage, which can be set to the primary nominal voltage (phase-phase) level of the power system or the high voltage equipment under consideration.

The time delay for ROV2PTOV (59N) is seldom critical, since residual voltage is related to ground faults in a high impedance grounded system, and enough time must normally be given for the primary protection to clear the fault. In some more specific situations, where the single overvoltage protection is used to protect some specific equipment, the time delay is shorter.

Some applications and related setting guidelines for the residual voltage level are given below.

Equipment protection, such as for motors, generators, reactors and transformers

High residual voltage indicates ground fault in the system, perhaps in the component to which Two step residual overvoltage protection (ROV2PTOV, 59N) is connected. For selectivity reasons to the primary protection for the faulted device ROV2PTOV (59N) must trip the component with some time delay. The setting must be above the highest occurring "normal" residual voltage and below the highest acceptable residual voltage for the equipment

Equipment protection, capacitors

High voltage will deteriorate the dielectric and the insulation. Two step residual overvoltage protection (ROV2PTOV, 59N) has to be connected to a neutral or open delta winding. The setting must be above the highest occurring "normal" residual voltage and below the highest acceptable residual voltage for the capacitor.

Power supply quality

The setting must be above the highest occurring "normal" residual voltage and below the highest acceptable residual voltage, due to regulation, good practice or other agreements.

High impedance grounded systems

In high impedance grounded systems, ground faults cause a neutral voltage in the feeding transformer neutral. Two step residual overvoltage protection ROV2PTOV (59N) is used to trip the transformer, as a backup protection for the feeder ground fault protection, and as a backup for the transformer primary ground fault protection. The setting must be above the highest occurring "normal" residual voltage, and below the lowest occurring residual voltage during the faults under consideration. A metallic single-phase ground fault causes a transformer neutral to reach a voltage equal to the nominal phase-to-ground voltage.

The voltage transformers measuring the phase-to-ground voltages measure zero voltage in the faulty phase. The two healthy phases will measure full phase-to-phase voltage, as the faulty phase will be connected to ground. The residual overvoltage will be three times the phase-to-ground voltage. See figure 222.

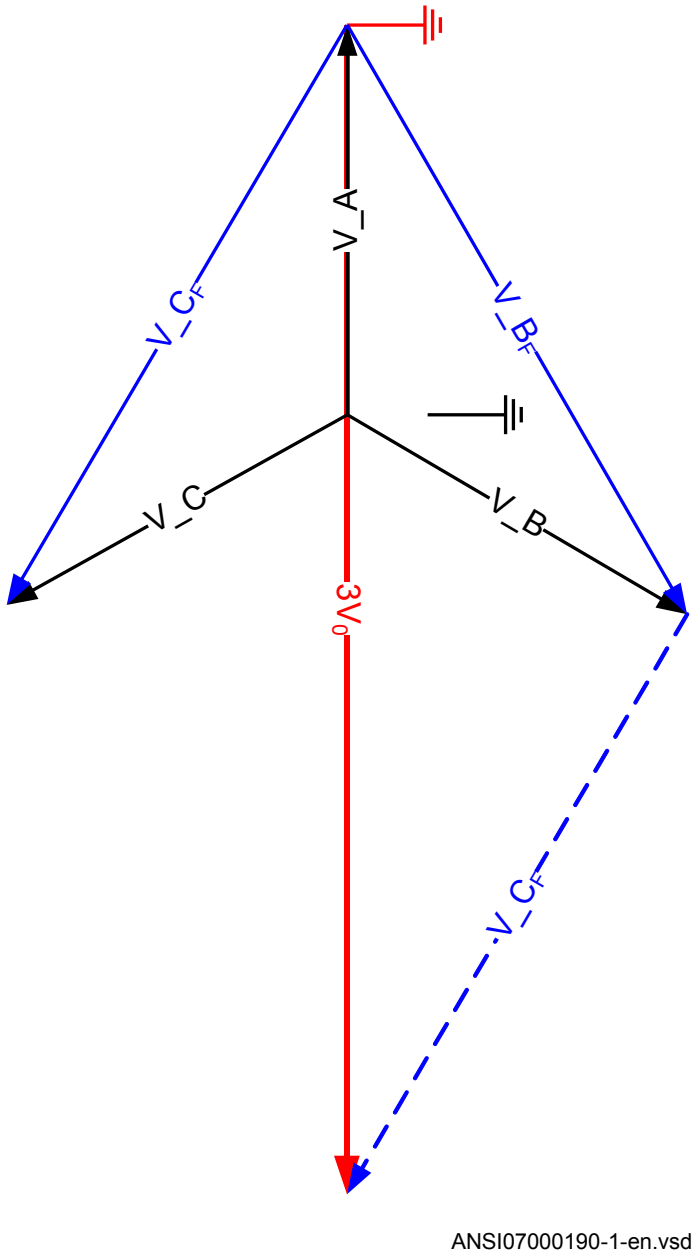

Figure 222: Ground fault in Non-effectively grounded systems

Direct grounded system

In direct grounded systems, an ground fault on one phase indicates a voltage collapse in that phase. The two healthy phases will have normal phase-to-ground voltages. The residual sum will have the same value as the remaining phase-to-ground voltage. See figure 223.

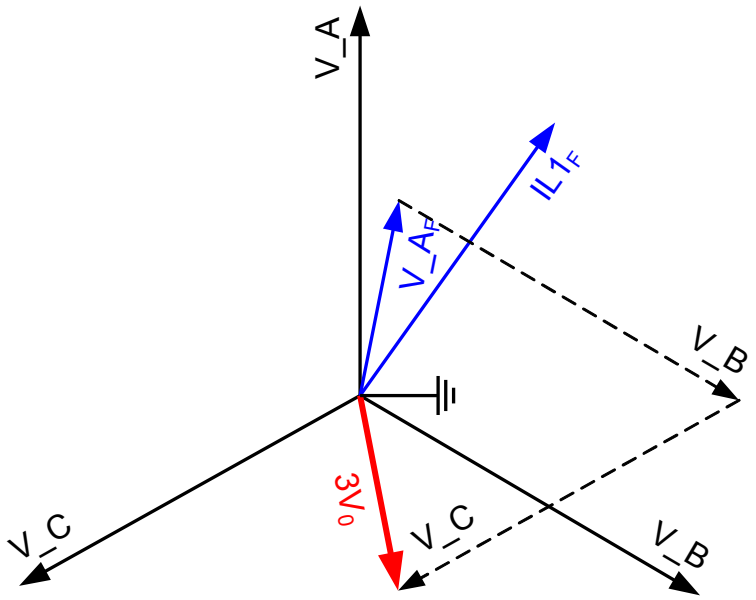

ANSI07000189-1-en.vsd

Figure 223: Ground fault in Direct grounded system

Settings for Two step residual overvoltage protection

Operation: *Disabled* or *Enabled*

VBase is used as voltage reference for the voltage. The voltage can be fed to the IED in different ways:

1. The IED is fed from a normal voltage transformer group where the residual voltage is calculated internally from the phase-to-ground voltages within the protection. The setting of the analogue input is given as *VBase*=Vph-ph.
2. The IED is fed from a broken delta connection normal voltage transformer group. In an open delta connection the protection is fed by the voltage 3V0 (single input). The Setting chapter in the application manual explains how the analog input needs to be set.
3. The IED is fed from a single voltage transformer connected to the neutral point of a power transformer in the power system. In this connection the protection is fed by the voltage VN=V0 (single input). The Setting chapter in the application manual explains how the analog input needs to be set. ROV2PTOV (59N) will measure the residual voltage corresponding nominal phase-to-ground voltage for a high impedance grounded system. The measurement will be based on the neutral voltage displacement.

The below described setting parameters are identical for the two steps (*n* = step 1 and 2). Therefore the setting parameters are described only once.

Characteristicn: Selected inverse time characteristic for step *n*. This parameter gives the type of time delay to be used. The setting can be, *Definite time* or *Inverse curve A* or *Inverse curve B* or *Inverse curve C* or *Prog. inv. curve*. The choice is highly dependent of the protection application.

Pickupn: Set operate overvoltage operation value for step *n*, given as % of residual voltage corresponding to *VBase*:

$$V > (\%) \cdot VBase(kV) / \sqrt{3}$$

(Equation 401)

The setting is dependent of the required sensitivity of the protection and the system grounding. In non-effectively grounded systems the residual voltage can be maximum the rated phase-to-ground voltage, which should correspond to 100%.

In effectively grounded systems this value is dependent of the ratio Z0/Z1. The required setting to detect high resistive ground faults must be based on network calculations.

tn: time delay of step *n*, given in s. The setting is highly dependent of the protection application. In many applications, the protection function has the task to prevent damages to the protected object. The speed might be important for example in case of protection of transformer that might be overexcited. The time delay must be co-ordinated with other automated actions in the system.

tResetn: Reset time for step *n* if definite time delay is used, given in s. The default value is 25 ms.

tnMin: Minimum operation time for inverse time characteristic for step *n*, given in s. For very high voltages the overvoltage function, using inverse time characteristic, can give very short operation time. This might lead to unselective trip. By setting *t1Min* longer than the operation time for other protections such unselective tripping can be avoided.

ResetTypeCrvn: Set reset type curve for step *n*. This parameter can be set: *Instantaneous*,*Frozen time*,*Linearly decreased*. The default setting is *Instantaneous*.

tIResetn: Reset time for step *n* if inverse time delay is used, given in s. The default value is 25 ms.

TDn: Time multiplier for inverse time characteristic. This parameter is used for co-ordination between different inverse time delayed undervoltage protections.

ACrvn, *BCrvn*, *CCrvn*, *DCrvn*, *PCrvn*: Parameters for step *n*, to set to create programmable undervoltage inverse time characteristic. Description of this can be found in the technical reference manual.

CrvSatn: Set tuning parameter for step *n*. When the denominator in the expression of the programmable curve is equal to zero the time delay will be infinity. There will be an undesired discontinuity. Therefore, a tuning parameter *CrvSatn* is set to compensate for this phenomenon. In the voltage interval *Pickup*> up to *Pickup*> · (1.0 + *CrvSatn*/100) the used voltage will be: *Pickup*> · (1.0 + *CrvSatn*/100). If the programmable curve is used this parameter must be calculated so that:

$$B \cdot \frac{CrvSatn}{100} - C > 0$$

(Equation 402)

HystAbsn: Absolute hysteresis for step *n*, set in % of *VBase*. The setting of this parameter is highly dependent of the application.

3.8.3.3 Setting parameters

Table 129: ROV2PTOV (59N) Group settings (basic)

Name	Values (Range)	Unit	Step	Default	Description
Operation	Disabled Enabled	-	-	Disabled	Disable/Enable Operation
VBase	0.05 - 2000.00	kV	0.05	400.00	Base voltage
OperationStep1	Disabled Enabled	-	-	Enabled	Enable execution of step 1
Characterist1	Definite time Inverse curve A Inverse curve B Inverse curve C Prog. inv. curve	-	-	Definite time	Selection of time delay curve type for step 1
Pickup1	1 - 200	%VB	1	30	Voltage setting/pickup value (DT & TOV), step 1 in % of VBase
t1	0.00 - 6000.00	s	0.01	5.00	Definitive time delay of step 1
t1Min	0.000 - 60.000	s	0.001	5.000	Minimum operate time for inverse curves for step 1
TD1	0.05 - 1.10	-	0.01	0.05	Time multiplier for the inverse time delay for step 1
HystAbs1	0.0 - 100.0	%VB	0.1	0.5	Absolute hysteresis in % of VBase, step 1
OperationStep2	Disabled Enabled	-	-	Enabled	Enable execution of step 2

Table continues on next page

Name	Values (Range)	Unit	Step	Default	Description
Characterist2	Definite time Inverse curve A Inverse curve B Inverse curve C Prog. inv. curve	-	-	Definite time	Selection of time delay curve type for step 2
Pickup2	1 - 100	%VB	1	45	Voltage setting/pickup value (DT & TOV), step 2 in % of VBase
t2	0.000 - 60.000	s	0.001	5.000	Definitive time delay of step 2
t2Min	0.000 - 60.000	s	0.001	5.000	Minimum operate time for inverse curves for step 2
TD2	0.05 - 1.10	-	0.01	0.05	Time multiplier for the inverse time delay for step 2
HystAbs2	0.0 - 100.0	%VB	0.1	0.5	Absolute hysteresis in % of VBase, step 2

Table 130: ROV2PTOV (59N) Group settings (advanced)

Name	Values (Range)	Unit	Step	Default	Description
tReset1	0.000 - 60.000	s	0.001	0.025	Reset time delay used in IEC Definite Time curve step 1
ResetTypeCrv1	Instantaneous Frozen timer Linearly decreased	-	-	Instantaneous	Selection of used IDMT reset curve type for step 1
tIReset1	0.000 - 60.000	s	0.001	0.025	Time delay in Inverse-Time reset (s), step 1
ACrv1	0.005 - 200.000	-	0.001	1.000	Parameter A for customer programmable curve for step 1
BCrv1	0.50 - 100.00	-	0.01	1.00	Parameter B for customer programmable curve for step 1
CCrv1	0.0 - 1.0	-	0.1	0.0	Parameter C for customer programmable curve for step 1
DCrv1	0.000 - 60.000	-	0.001	0.000	Parameter D for customer programmable curve for step 1
PCrv1	0.000 - 3.000	-	0.001	1.000	Parameter P for customer programmable curve for step 1
CrvSat1	0 - 100	%	1	0	Tuning param for programmable over voltage TOV curve, step 1
tReset2	0.000 - 60.000	s	0.001	0.025	Time delay in Definite-Time reset (s), step 2
ResetTypeCrv2	Instantaneous Frozen timer Linearly decreased	-	-	Instantaneous	Selection of Time Delay reset curve for step 2
tIReset2	0.000 - 60.000	s	0.001	0.025	Time delay in Inverse-Time reset (s), step 2
ACrv2	0.005 - 200.000	-	0.001	1.000	Parameter A for customer programmable curve for step 2
BCrv2	0.50 - 100.00	-	0.01	1.00	Parameter B for customer programmable curve for step 2

Table continues on next page

Name	Values (Range)	Unit	Step	Default	Description
CCrv2	0.0 - 1.0	-	0.1	0.0	Parameter C for customer programmable curve for step 2
DCrv2	0.000 - 60.000	-	0.001	0.000	Parameter D for customer programmable curve for step 2
PCrv2	0.000 - 3.000	-	0.001	1.000	Parameter P for customer programmable curve for step 2
CrvSat2	0 - 100	%	1	0	Tuning param for programmable over voltage TOV curve, step 2

3.8.4 Overexcitation protection OEXPVPH (24)

Function description	IEC 61850 identification	IEC 60617 identification	ANSI/IEEE C37.2 device number
Overexcitation protection	OEXPVPH	*U/f >*	24

3.8.4.1 Application

When the laminated core of a power transformer is subjected to a magnetic flux density beyond its design limits, stray flux will flow into non-laminated components not designed to carry flux and cause eddy currents to flow. The eddy currents can cause excessive heating and severe damage to insulation and adjacent parts in a relatively short time.

Overvoltage, or underfrequency, or a combination of both, will result in an excessive flux density level, which is denominated overfluxing or over-excitation.

The greatest risk for overexcitation exists in a thermal power station when the generator-transformer block is disconnected from the rest of the network, or in network “islands” occuring at disturbance where high voltages and/or low frequencies can occur. Overexcitation can occur during start-up and shut-down of the generator if the field current is not properly adjusted. Loss-of load or load-shedding can also result in overexcitation if the voltage control and frequency governor is not functioning properly. Loss of load or load-shedding at a transformer substation can result in overexcitation if the voltage control function is insufficient or out of order. Low frequency in a system isolated from the main network can result in overexcitation if the voltage regulating system maintains normal voltage.

According to the IEC standards, the power transformers shall be capable of delivering rated load current continuously at an applied voltage of 105% of rated value (at rated frequency). For special cases, the purchaser may specify that the transformer shall be

capable of operating continuously at an applied voltage 110% of rated value at no load, reduced to 105% at rated secondary load current.

According to ANSI/IEEE standards, the transformers shall be capable of delivering rated load current continuously at an output voltage of 105% of rated value (at rated frequency) and operate continuously with output voltage equal to 110% of rated value at no load.

The capability of a transformer (or generator) to withstand overexcitation can be illustrated in the form of a thermal capability curve, that is, a diagram which shows the permissible time as a function of the level of over-excitation. When the transformer is loaded, the induced voltage and hence the flux density in the core can not be read off directly from the transformer terminal voltage. Normally, the leakage reactance of each separate winding is not known and the flux density in the transformer core can then not be calculated. In two-winding transformers, the low voltage winding is normally located close to the core and the voltage across this winding reflects the flux density in the core. However, depending on the design, the flux flowing in the yoke may be critical for the ability of the transformer to handle excess flux.

The Overexcitation protection (OEXPVPH, 24) has current inputs to allow calculation of the load influence on the induced voltage. This gives a more exact measurement of the magnetizing flow. For power transformers with unidirectional load flow, the voltage to OEXPVPH (24) should therefore be taken from the feeder side.

Heat accumulated in critical parts during a period of overexcitation will be reduced gradually when the excitation returns to the normal value. If a new period of overexcitation occurs after a short time interval, the heating will start from a higher level, therefore, OEXPVPH (24) must have thermal memory. A fixed cooling time constant is settable within a wide range.

The general experience is that the overexcitation characteristics for a number of power transformers are not in accordance with standard inverse time curves. In order to make optimal settings possible, a transformer adapted characteristic is available in the IED. The operate characteristic of the protection function can be set to correspond quite well with any characteristic by setting the operate time for six different figures of overexcitation in the range from 100% to 180% of rated V/Hz.

When configured to a single phase-to-phase voltage input, a corresponding phase-to-phase current is calculated which has the same phase angle relative the phase-to-phase voltage as the phase currents have relative the phase voltages in a symmetrical system. The function should preferably be configured to use a three-phase voltage input if available. It then uses the positive sequence quantities of voltages and currents.

Analog measurements shall not be taken from any winding where a load tap changer is located.

Some different connection alternatives are shown in figure 224.

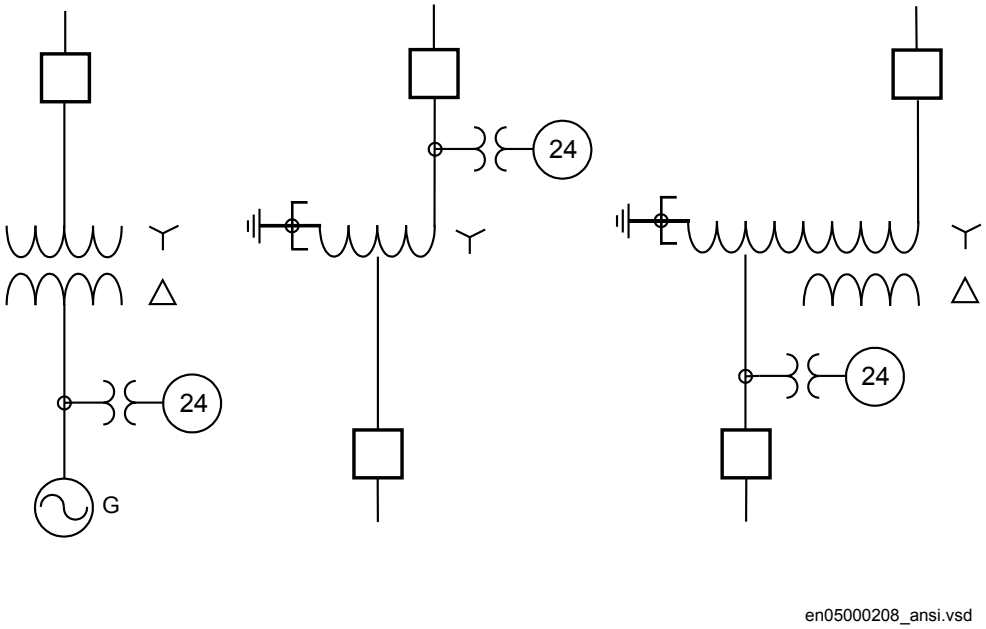

Figure 224: Alternative connections of an Overexcitation protection OEXPVPH (24) (Volt/Hertz)

3.8.4.2 Setting guidelines

Recommendations for input and output signals

Recommendations for Input signals

Please see the default factory configuration.

BLOCK: The input will block the operation of the Overexcitation protection OEXPVPH (24), for example, the block input can be used to block the operation for a limited time during special service conditions.

RESET: OEXPVPH (24) has a thermal memory, which can take a long time to reset. Activation of the RESET input will reset the function instantaneously.

Recommendations for Output signals

Please see the default factory configuration for examples of configuration.

ERROR: The output indicates a measuring error. The reason, for example, can be configuration problems where analogue signals are missing.

BFI: The BFI output indicates that the level Pickup1> has been reached. It can be used to initiate time measurement.

TRIP: The TRIP output is activated after the operate time for the V/f level has expired. TRIP signal is used to trip the circuit breaker(s).

ALARM: The output is activated when the alarm level has been reached and the alarm timer has elapsed. When the system voltage is high this output sends an alarm to the operator.

Settings

Operation: The operation of the Overexcitation protection OEXPVPH (24) can be set to *Enabled*/*Disabled*.

VBase: The *VBase* setting is the setting of the base (per unit) voltage on which all percentage settings are based. The setting is normally the system voltage level.

IBase: The *IBase* setting is the setting of the base (per unit) current on which all percentage settings are based. Normally the power transformer rated current is used but alternatively the current transformer rated current can be set.

MeasuredV: The phases involved in the measurement are set here. Normally the three phase measurement measuring the positive sequence voltage should be used but when only individual VT's are used a single phase-to-phase can be used.

MeasuredI: The phases involved in the measurement are set here. *MeasuredI:* must be in accordance with *MeasuredV*.

Pickup1: Operating level for the inverse characteristic, IEEE or tailor made. The operation is based on the relation between rated voltage and rated frequency and set as a percentage factor. Normal setting is around 108-110% depending of the capability curve for the transformer/generator.

Pickup2: Operating level for the *t_MinTripDelay* definite time delay used at high overvoltages. The operation is based on the relation between rated voltage and rated frequency and set as a percentage factor. Normal setting is around 110-180% depending of the capability curve of the transformer/generator. Setting should be above the knee-point when the characteristic starts to be straight on the high side.

XLeakage: The transformer leakage reactance on which the compensation of voltage measurement with load current is based. The setting shall be the transformer leak reactance in primary ohms. If no current compensation is used (mostly the case) the setting is not used.

t_TripPulse: The length of the trip pulse. Normally the final trip pulse is decided by the trip function block. A typical pulse length can be 50 ms.

CurveType: Selection of the curve type for the inverse delay. The IEEE curves or tailor made curve can be selected depending of which one matches the capability curve best.

TDforIEEECurve: The time constant for the inverse characteristic. Select the one giving the best match to the transformer capability.

t_CooolingK: The cooling time constant giving the reset time when voltages drops below the set value. Shall be set above the cooling time constant of the transformer. The default value is recommended to be used if the constant is not known.

t_MinTripDelay: The operating times at voltages higher than the set *Pickup2*. The setting shall match capabilities on these high voltages. Typical setting can be 1-10 second.

t_MaxTripDelay: For overvoltages close to the set value times can be extremely long if a high K time constant is used. A maximum time can then be set to cut the longest times. Typical settings are 1800-3600 seconds (30-60 minutes)

AlarmPickup: Setting of the alarm level in percentage of the set trip level. The alarm level is normally set at around 98% of the trip level.

tAlarm: Setting of the time to alarm is given from when the alarm level has been reached. Typical setting is 5 seconds.

Service value report

A number of internal parameters are available as service values for use at commissioning and during service. Remaining time to trip (in seconds) TMTOTRIP, flux density VPERHZ, internal thermal content in percentage of trip value THERMSTA. The values are available at local HMI, Substation SAsystem and PCM600.

Setting example

Sufficient information about the overexcitation capability of the protected object(s) must be available when making the settings. The most complete information is given in an overexcitation capability diagram as shown in figure 225.

The settings *Pickup2* and *Pickup1* are made in per unit of the rated voltage of the transformer winding at rated frequency.

Set the transformer adapted curve for a transformer with overexcitation characteristics in according to figure 225.

Pickup1 for the protection is set equal to the permissible continuous overexcitation according to figure 225 = 105%. When the overexcitation is equal to *Pickup1*, tripping is obtained after a time equal to the setting of t1.

This is the case when *VBase* is equal to the transformer rated voltages. For other values, the percentage settings need to be adjusted accordingly.

When the overexcitation is equal to the set value of *Pickup2*, tripping is obtained after a time equal to the setting of t6. A suitable setting would be *Pickup2* = 140% and t6 = 4 s.

The interval between *Pickup2* and *Pickup1* is automatically divided up in five equal steps, and the time delays t2 to t5 will be allocated to these values of overexcitation. In this example, each step will be (140-105) /5 = 7%. The setting of time delays t1 to t6 are listed in table 131.

Table 131: Settings

V/f op (%)	Timer	Time set (s)
105	t1	7200 (max)
112	t2	600
119	t3	60
126	t4	20
133	t5	8
140	t6	4

Information on the cooling time constant T_{cool} should be retrieved from the power transformer manufacturer.

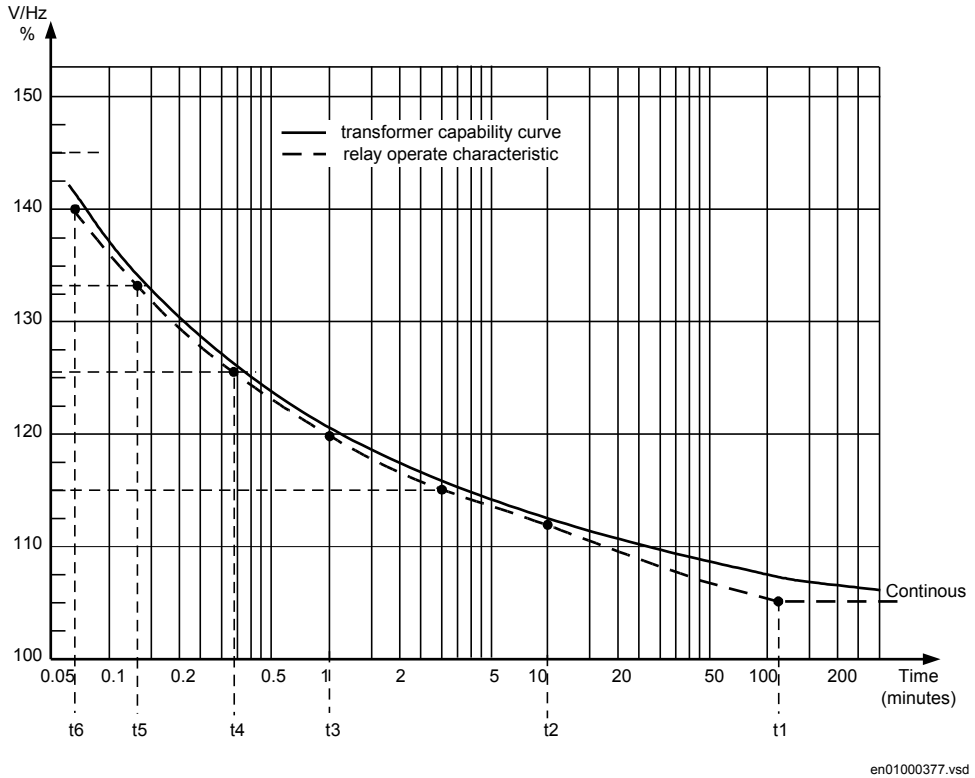

Figure 225: Example on overexcitation capability curve and V/Hz protection settings for power transformer

3.8.4.3 Setting parameters

Table 132: OEXPVPH (24) Group settings (basic)

Name	Values (Range)	Unit	Step	Default	Description
Operation	Disabled Enabled	-	-	Disabled	Disable/Enable Operation
IBase	1 - 99999	A	1	3000	Base current (rated phase current) in A
VBase	0.05 - 2000.00	kV	0.05	400.00	Base voltage (main voltage) in kV
Pickup1	100.0 - 180.0	%VB/f	0.1	110.0	Operate level of V/Hz at no load and rated freq in % of (Vbase/frated)
Pickup2	100.0 - 200.0	%VB/f	0.1	140.0	High level of V/Hz above which tMin is used, in % of (Vbase/fn)
XLeakage	0.000 - 200.000	ohm	0.001	0.000	Winding leakage reactance in primary ohms
t_TripPulse	0.000 - 60.000	s	0.001	0.100	Length of the pulse for trip signal (in sec)
t_MinTripDelay	0.000 - 60.000	s	0.001	7.000	Minimum trip delay for V/Hz inverse curve, in sec

Table continues on next page

Name	Values (Range)	Unit	Step	Default	Description
t_MaxTripDelay	0.00 - 9000.00	s	0.01	1800.00	Maximum trip delay for V/Hz inverse curve, in sec
t_CoolingK	0.10 - 9000.00	s	0.01	1200.00	Transformer magnetic core cooling time constant, in sec
CurveType	IEEE Tailor made	-	-	IEEE	Inverse time curve selection, IEEE/Tailor made
TDForIEEECurve	1 - 60	-	1	1	Time multiplier for IEEE inverse type curve
AlarmPickup	50.0 - 120.0	%	0.1	100.0	Alarm pickup level as % of Step1 trip pickup level
tAlarm	0.00 - 9000.00	s	0.01	5.00	Alarm time delay, in sec

Table 133: OEXPVPH (24) Group settings (advanced)

Name	Values (Range)	Unit	Step	Default	Description
t1_UserCurve	0.00 - 9000.00	s	0.01	7200.00	Time delay t1 (longest) for tailor made curve, in sec
t2_UserCurve	0.00 - 9000.00	s	0.01	3600.00	Time delay t2 for tailor made curve, in sec
t3_UserCurve	0.00 - 9000.00	s	0.01	1800.00	Time delay t3 for tailor made curve, in sec
t4_UserCurve	0.00 - 9000.00	s	0.01	900.00	Time delay t4 for tailor made curve, in sec
t5_UserCurve	0.00 - 9000.00	s	0.01	450.00	Time delay t5 for tailor made curve, in sec
t6_UserCurve	0.00 - 9000.00	s	0.01	225.00	Time delay t6 (shortest) for tailor made curve, in sec

Table 134: OEXPVPH (24) Non group settings (basic)

Name	Values (Range)	Unit	Step	Default	Description
MeasuredV	PosSeq AB BC CA	-	-	AB	Selection of measured voltage
MeasuredI	AB BC CA PosSeq	-	-	AB	Selection of measured current

3.8.5 Voltage differential protection VDCPTOV (60)

Function description	IEC 61850 identification	IEC 60617 identification	ANSI/IEEE C37.2 device number
Voltage differential protection	VDCPTOV	-	60

3.8.5.1 Application

The Voltage differential protection VDCPTOV (60) functions can be used in some different applications.

- Voltage unbalance protection for capacitor banks. The voltage on the bus is supervised with the voltage in the capacitor bank, phase- by phase. Difference indicates a fault, either short-circuited or open element in the capacitor bank. It is mainly used on elements with external fuses but can also be used on elements with internal fuses instead of a current unbalance protection measuring the current between the neutrals of two half's of the capacitor bank. The function requires voltage transformers in all phases of the capacitor bank. Figure 226 shows some different alternative connections of this function.

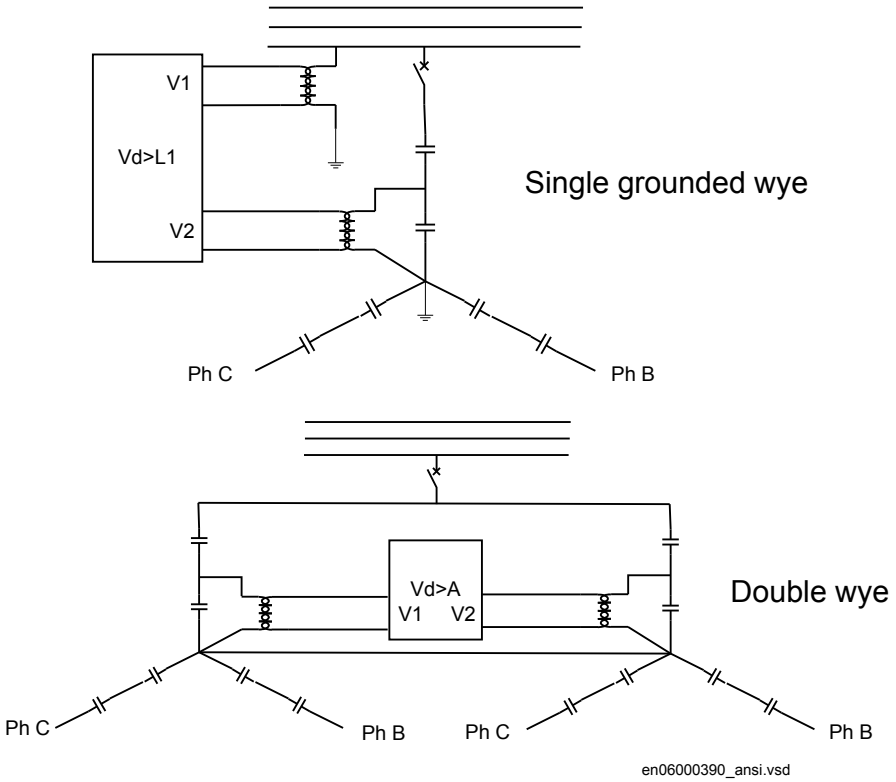

Figure 226: Connection of voltage differential protection VDCPTOV (60) function to detect unbalance in capacitor banks (one phase only is shown)

VDCPTOV (60) function has a block input (BLOCK) where a fuse failure supervision (or MCB tripped) can be connected to prevent problems if one fuse in the capacitor bank voltage transformer set has opened and not the other (capacitor voltage is connected to input V2). It will also ensure that a fuse failure alarm is given instead of a Undervoltage or Differential voltage alarm and/or tripping.

Fuse failure supervision (SDDRFUF) function for voltage transformers. In many application the voltages of two fuse groups of the same voltage transformer or fuse groups of two separate voltage transformers measuring the same voltage can be supervised with this function. It will be an alternative for example, generator units where often two voltage transformers are supplied for measurement and excitation equipment.

The application to supervise the voltage on two voltage transformers in the generator circuit is shown in figure 227.

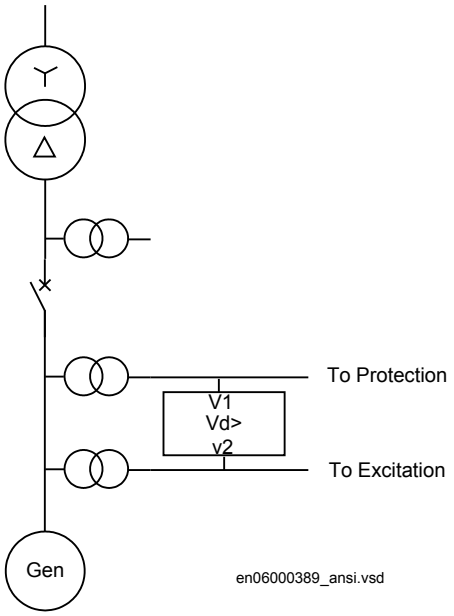

Figure 227: Supervision of fuses on generator circuit voltage transformers

3.8.5.2 Setting guidelines

The parameters for the voltage differential function are set via the local HMI or PCM600.

The following settings are done for the voltage differential function.

Operation: *Off/On*

VBase: Base voltage level in kV. The base voltage is used as reference for the voltage setting factors. Normally, it is set to the system voltage level.

BlkDiffAtVLow: The setting is to block the function when the voltages in the phases are low.

RFLx: Is the setting of the voltage ratio compensation factor where possible differences between the voltages is compensated for. The differences can be due to different voltage transformer ratios, different voltage levels e.g. the voltage measurement inside the capacitor bank can have a different voltage level but the difference can also e.g. be used by voltage drop in the secondary circuits. The setting is normally done at site by evaluating the differential voltage achieved as a service value for each phase. The factor is defined as V2 · *RFLx* and shall be equal to the V1 voltage. Each phase has its own ratio factor.

VDTrip: The voltage differential level required for tripping is set with this parameter. For application on capacitor banks the setting will depend of the capacitor bank voltage and the number of elements per phase in series and parallel. Capacitor banks must be tripped before excessive voltage occurs on the healthy capacitor elements. The setting values required are normally given by the capacitor bank supplier. For other applications it has to be decided case by case. For fuse supervision normally only the alarm level is used.

tTrip: The time delay for tripping is set by this parameter. Normally, the delay does not need to be so short in capacitor bank applications as there is no fault requiring urgent tripping.

tReset: The time delay for reset of tripping level element is set by this parameter. Normally, it can be set to a short delay as faults are permanent when they occur.

For the advanced users following parameters are also available for setting. Default values are here expected to be acceptable.

V1Low: The setting of the undervoltage level for the first voltage input is decided by this parameter. The proposed default setting is 70%.

V2Low: The setting of the undervoltage level for the second voltage input is decided by this parameter. The proposed default setting is 70%.

tBlock: The time delay for blocking of the function at detected undervoltages is set by this parameter.

VDAlarm: The voltage differential level required for alarm is set with this parameter. For application on capacitor banks the setting will depend of the capacitor bank voltage and the number of elements per phase in series and parallel. Normally values required are given by capacitor bank supplier.

For fuse supervision normally only this alarm level is used and a suitable voltage level is 3-5% if the ratio correction factor has been properly evaluated during commissioning.

For other applications it has to be decided case by case.

tAlarm: The time delay for alarm is set by this parameter. Normally, few seconds delay can be used on capacitor banks alarm. For fuse failure supervision (SDDRFUF) the alarm delay can be set to zero.

3.8.5.3 Setting parameters

Table 135: VDCPTOV (60) Group settings (basic)

Name	Values (Range)	Unit	Step	Default	Description
Operation	Disabled Enabled	-	-	Disabled	Operation Enable/Disable
VBase	0.50 - 2000.00	kV	0.01	400.00	Base Voltage
BlkDiffAtVLow	No Yes	-	-	Yes	Block operation at low voltage
VDTrip	0.0 - 100.0	%VB	0.1	5.0	Operate level, in % of VBase
tTrip	0.000 - 60.000	s	0.001	1.000	Time delay for voltage differential operate, in milliseconds
tReset	0.000 - 60.000	s	0.001	0.000	Time delay for voltage differential reset, in seconds
V1Low	0.0 - 100.0	%VB	0.1	70.0	Input 1 undervoltage level, in % of VBase
V2Low	0.0 - 100.0	%VB	0.1	70.0	Input 2 undervoltage level, in % of VBase
tBlock	0.000 - 60.000	s	0.001	0.000	Reset time for undervoltage block
VDAlarm	0.0 - 100.0	%VB	0.1	2.0	Alarm level, in % of VBase
tAlarm	0.000 - 60.000	s	0.001	2.000	Time delay for voltage differential alarm, in seconds

Table 136: VDCPTOV (60) Group settings (advanced)

Name	Values (Range)	Unit	Step	Default	Description
RF_A	0.000 - 3.000	-	0.001	1.000	Ratio compensation factor phase L1 U2L1*RFL1=U1L1
RF_B	0.000 - 3.000	-	0.001	1.000	Ratio compensation factor phase L2 U2L2*RFL2=U1L2
RF_C	0.000 - 3.000	-	0.001	1.000	Ratio compensation factor phase L3 U2L3*RFL3=U1L3

3.8.6 Loss of voltage check LOVPTUV (27)

Function description	IEC 61850 identification	IEC 60617 identification	ANSI/IEEE C37.2 device number
Loss of voltage check	LOVPTUV	-	27

3.8.6.1 Application

The trip of the circuit breaker at a prolonged loss of voltage at all the three phases is normally used in automatic restoration systems to facilitate the system restoration after a major blackout. Loss of voltage check (LOVPTUV, 27) generates a TRIP signal only if the voltage in all the three phases is low for more than the set time. If the trip to the circuit breaker is not required, LOVPTUV (27) is used for signallization only through an output contact or through the event recording function.

3.8.6.2 Setting guidelines

Loss of voltage check (LOVPTUV, 27) is in principle independent of the protection functions. It requires to be set to open the circuit breaker in order to allow a simple system restoration following a main voltage loss of a big part of the network and only when the voltage is lost with breakers still closed.

All settings are in primary values or per unit. Set *VBase* to rated voltage of the system or the voltage transformer primary rated voltage. Set operating level per phase *VPG* to typically 70% of rated *VBase* level. Set the time delay *tTrip*=5-20 seconds.

Advanced users settings

For advanced users the following parameters need also to be set. Set the length of the trip pulse to typical *tPulse*=0.15 sec. Set the blocking time *tBlock* to block Loss of voltage check (LOVPTUV, 27), if some but not all voltage are low, to typical 5.0 seconds and set the time delay for enabling the function after restoration *tRestore* to 3 - 40 seconds.

3.8.6.3 Setting parameters

Table 137: LOVPTUV (27) Group settings (basic)

Name	Values (Range)	Unit	Step	Default	Description
Operation	Disabled Enabled	-	-	Disabled	Operation Enable/Disable
VBase	0.1 - 9999.9	kV	0.1	400.0	Base voltage
VPG	1 - 100	%VB	1	70	Pickup voltage in % of base voltage Vbase
tTrip	0.000 - 60.000	s	0.001	7.000	Operate time delay

Table 138: LOVPTUV (27) Group settings (advanced)

Name	Values (Range)	Unit	Step	Default	Description
tPulse	0.050 - 60.000	s	0.001	0.150	Duration of TRIP pulse
tBlock	0.000 - 60.000	s	0.001	5.000	Time delay to block when all 3ph voltages are not low
tRestore	0.000 - 60.000	s	0.001	3.000	Time delay for enable the function after restoration

3.9 Frequency protection

3.9.1 Underfrequency protection SAPTUF (81)

Function description	IEC 61850 identification	IEC 60617 identification	ANSI/IEEE C37.2 device number
Underfrequency protection	SAPTUF	*f* <	81

3.9.1.1 Application

Underfrequency protection SAPTUF (81) is applicable in all situations, where reliable detection of low fundamental power system frequency is needed. The power system frequency, and the rate of change of frequency, is a measure of the unbalance between the actual generation and the load demand. Low fundamental frequency in a power system indicates that the available generation is too low to fully supply the power demanded by the load connected to the power grid. SAPTUF (81) detects such situations and provides an output signal, suitable for load shedding, generator boosting, HVDC-set-point change, gas turbine start up and so on. Sometimes shunt reactors are automatically switched in due to low frequency, in order to reduce the power system voltage and hence also reduce the voltage dependent part of the load.

SAPTUF (81) is very sensitive and accurate and is used to alert operators that frequency has slightly deviated from the set-point, and that manual actions might be enough. The underfrequency signal is also used for overexcitation detection. This is especially important for generator step-up transformers, which might be connected to the generator but disconnected from the grid, during a roll-out sequence. If the generator is still energized, the system will experience overexcitation, due to the low frequency.

3.9.1.2 Setting guidelines

All the frequency and voltage magnitude conditions in the system where SAPTUF (81) performs its functions should be considered. The same also applies to the associated equipment, its frequency and time characteristic.

There are especially two specific application areas for SAPTUF (81):

1. to protect equipment against damage due to low frequency, such as generators, transformers, and motors. Overexcitation is also related to low frequency
2. to protect a power system, or a part of a power system, against breakdown, by shedding load, in generation deficit situations.

The underfrequency PICKUP value is set in Hz. All voltage magnitude related settings are made as a percentage of a settable base voltage, which normally is set to the nominal primary voltage level (phase-phase) of the power system or the high voltage equipment under consideration.

Some applications and related setting guidelines for the frequency level are given below:

Equipment protection, such as for motors and generators

The setting has to be well below the lowest occurring "normal" frequency and well above the lowest acceptable frequency for the equipment.

Power system protection, by load shedding

The setting has to be below the lowest occurring "normal" frequency and well above the lowest acceptable frequency for power stations, or sensitive loads. The setting level, the number of levels and the distance between two levels (in time and/or in frequency) depends very much on the characteristics of the power system under consideration. The size of the "largest loss of production" compared to "the size of the power system" is a critical parameter. In large systems, the load shedding can be set at a fairly high frequency level, and the time delay is normally not critical. In smaller systems the frequency PICKUP level has to be set at a lower value, and the time delay must be rather short.

The voltage related time delay is used for load shedding. The settings of SAPTUF (81) could be the same all over the power system. The load shedding is then performed firstly in areas with low voltage magnitude, which normally are the most problematic areas, where the load shedding also is most efficient.

Equipment protection, such as for motors and generators

The setting has to be well below the lowest occurring "normal" frequency and well above the lowest acceptable frequency for the equipment.

Power system protection, by load shedding

The setting has to be well below the lowest occurring "normal" frequency and well above the lowest acceptable frequency for power stations, or sensitive loads. The setting level, the number of levels and the distance between two levels (in time and/or in frequency) depends very much on the characteristics of the power system under consideration. The size of the "largest loss of production" compared to "the size of the power system" is a critical parameter. In large systems, the load shedding can be set at a fairly high frequency level, and the time delay is normally not critical. In smaller systems the frequency pickup level has to be set at a lower value, and the time delay must be rather short.

The voltage related time delay is used for load shedding. The settings of the underfrequency function could be the same all over the power system. The load shedding is then performed firstly in areas with low voltage magnitude, which normally are the most problematic areas, where the load shedding also is most efficient.

3.9.1.3 Setting parameters

Table 139: SAPTUF (81) Group settings (basic)

Name	Values (Range)	Unit	Step	Default	Description
Operation	Disabled Enabled	-	-	Disabled	Disable/Enable Operation
Vbase	0.05 - 2000.00	kV	0.05	400.00	Base voltage
PUFrequency	35.00 - 75.00	Hz	0.01	48.80	Frequency setting pickup value.
IntBlockLevel	0 - 100	%VB	1	50	Internal blocking level in % of VBase.
TimeDlyOperate	0.000 - 60.000	s	0.001	0.200	Operate time delay in over/under-frequency mode.
TimeDlyReset	0.000 - 60.000	s	0.001	0.000	Time delay for reset.
TimeDlyRestore	0.000 - 60.000	s	0.001	0.000	Restore time delay.
RestoreFreq	45.00 - 65.00	Hz	0.01	50.10	Restore frequency if frequency is above frequency value.
TimerOperation	Definite timer Volt based timer	-	-	Definite timer	Setting for choosing timer mode.
VNom	50 - 150	%VB	1	100	Nominal voltage in % of VBase for voltage based timer.
VMin	50 - 150	%VB	1	90	Lower operation limit in % of VBase for voltage based timer.
Exponent	0.0 - 5.0	-	0.1	1.0	For calculation of the curve form for voltage based timer.
t_MaxTripDelay	0.010 - 60.000	s	0.001	1.000	Maximum time operation limit for voltage based timer.
t_MinTripDelay	0.010 - 60.000	s	0.001	1.000	Minimum time operation limit for voltage based timer.

3.9.2 Overfrequency protection SAPTOF (81)

Function description	IEC 61850 identification	IEC 60617 identification	ANSI/IEEE C37.2 device number
Overfrequency protection	SAPTOF	*f* >	81

3.9.2.1 Application

Overfrequency protection function SAPTOF (81) is applicable in all situations, where reliable detection of high fundamental power system frequency is needed. The power system frequency, and rate of change of frequency, is a measure of the unbalance between the actual generation and the load demand. High fundamental frequency in a power system indicates that the available generation is too large compared to the power demanded by the load connected to the power grid. SAPTOF (81) detects such situations and provides an output signal, suitable for generator shedding, HVDC-set-point change and so on. SAPTOF (81) is very sensitive and accurate and can also be used to alert operators that frequency has slightly deviated from the set-point, and that manual actions might be enough.

3.9.2.2 Setting guidelines

All the frequency and voltage magnitude conditions in the system where SAPTOF (81) performs its functions must be considered. The same also applies to the associated equipment, its frequency and time characteristic.

There are especially two application areas for SAPTOF (81):

1. to protect equipment against damage due to high frequency, such as generators, and motors
2. to protect a power system, or a part of a power system, against breakdown, by shedding generation, in over production situations.

The overfrequency PICKUP value is set in Hz. All voltage magnitude related settings are made as a percentage of a settable base voltage, which normally is set to the nominal voltage level (phase-to-phase) of the power system or the high voltage equipment under consideration.

Some applications and related setting guidelines for the frequency level are given below:

Equipment protection, such as for motors and generators

The setting has to be well above the highest occurring "normal" frequency and well below the highest acceptable frequency for the equipment.

Power system protection, by generator shedding

The setting must be above the highest occurring "normal" frequency and below the highest acceptable frequency for power stations, or sensitive loads. The setting level, the number of levels and the distance between two levels (in time and/or in frequency) depend very much on the characteristics of the power system under consideration. The size of the "largest loss of load" compared to "the size of the power system" is a critical parameter. In large systems, the generator shedding can be set at a fairly low frequency level, and the time delay is normally not critical. In smaller systems the frequency PICKUP level has to be set at a higher value, and the time delay must be rather short.

Equipment protection, such as for motors and generators
The setting has to be well above the highest occurring "normal" frequency and well below the highest acceptable frequency for the equipment.

Power system protection, by generator shedding
The setting level, the number of levels and the distance between two levels (in time and/or in frequency) depend very much on the characteristics of the power system under consideration. The size of the "largest loss of load" compared to "the size of the power system" is a critical parameter. In large systems, the generator shedding can be set at a fairly low frequency level, and the time delay is normally not critical. In smaller systems the frequency pickup level has to be set at a higher value, and the time delay must be rather short.

3.9.2.3 Setting parameters

Table 140: SAPTOF (81) Group settings (basic)

Name	Values (Range)	Unit	Step	Default	Description
Operation	Disabled Enabled	-	-	Disabled	Disable/Enable Operation
VBase	0.05 - 2000.00	kV	0.05	400.00	Base voltage
PUFrequency	35.00 - 75.00	Hz	0.01	51.20	Frequency setting pickup value.
IntBlockLevel	0 - 100	%VB	1	50	Internal blocking level in % of VBase.
TimeDlyOperate	0.000 - 60.000	s	0.001	0.000	Operate time delay in over/under-frequency mode.
TimeDlyReset	0.000 - 60.000	s	0.001	0.000	Time delay for reset.

3.9.3 Rate-of-change frequency protection SAPFRC (81)

Function description	IEC 61850 identification	IEC 60617 identification	ANSI/IEEE C37.2 device number
Rate-of-change frequency protection	SAPFRC	*df/dt* ≷	81

3.9.3.1 Application

Rate-of-change frequency protection (SAPFRC, 81), is applicable in all situations, where reliable detection of change of the fundamental power system voltage frequency is needed. SAPFRC (81) can be used both for increasing frequency and for decreasing frequency. SAPFRC (81) provides an output signal, suitable for load shedding or generator shedding, generator boosting, HVDC-set-point change, gas turbine start up and so on. Very often SAPFRC (81) is used in combination with a low frequency signal, especially in smaller power systems, where loss of a fairly large generator will require quick remedial actions to secure the power system integrity. In such situations load shedding actions are required at a rather high frequency level, but in combination with a large negative rate-of-change of frequency the underfrequency protection can be used at a rather high setting.

3.9.3.2 Setting guidelines

The parameters for Rate-of-change frequency protection SAPFRC (81) are set via the local HMI or PCM600.

All the frequency and voltage magnitude conditions in the system where SAPFRC (81) performs its functions should be considered. The same also applies to the associated equipment, its frequency and time characteristic.

There are especially two application areas for SAPFRC (81):

1. to protect equipment against damage due to high or too low frequency, such as generators, transformers, and motors
2. to protect a power system, or a part of a power system, against breakdown by shedding load or generation, in situations where load and generation are not in balance.

SAPFRC (81) is normally used together with an overfrequency or underfrequency function, in small power systems, where a single event can cause a large imbalance between load and generation. In such situations load or generation shedding has to take

place very quickly, and there might not be enough time to wait until the frequency signal has reached an abnormal value. Actions are therefore taken at a frequency level closer to the primary nominal level, if the rate-of-change frequency is large (with respect to sign).

SAPFRC (81)PICKUP value is set in Hz/s. All voltage magnitude related settings are made as a percentage of a settable base voltage, which normally is set to the primary nominal voltage level (phase-phase) of the power system or the high voltage equipment under consideration.

SAPFRC (81) is not instantaneous, since the function needs some time to supply a stable value. It is recommended to have a time delay long enough to take care of signal noise. However, the time, rate-of-change frequency and frequency steps between different actions might be critical, and sometimes a rather short operation time is required, for example, down to 70 ms.

Smaller industrial systems might experience rate-of-change frequency as large as 5 Hz/s, due to a single event. Even large power systems may form small islands with a large imbalance between load and generation, when severe faults (or combinations of faults) are cleared - up to 3 Hz/s has been experienced when a small island was isolated from a large system. For more "normal" severe disturbances in large power systems, rate-of-change of frequency is much less, most often just a fraction of 1.0 Hz/s.

3.9.3.3 Setting parameters

Table 141: SAPFRC (81) Group settings (basic)

Name	Values (Range)	Unit	Step	Default	Description
Operation	Disabled Enabled	-	-	Disabled	Disable/Enable Operation
VBase	0.05 - 2000.00	kV	0.05	400.00	Base setting for the phase-phase voltage in kV
PUFreqGrad	-10.00 - 10.00	Hz/s	0.01	0.50	Frequency gradient start value. Sign defines direction.
IntBlockLevel	0 - 100	%VB	1	50	Internal blocking level in % of VBase.
tTrip	0.000 - 60.000	s	0.001	0.200	Operate time delay in pos./neg. frequency gradient mode.
RestoreFreq	45.00 - 65.00	Hz	0.01	49.90	Restore frequency if frequency is above frequency value (Hz)
tRestore	0.000 - 60.000	s	0.001	0.000	Restore time delay.
tReset	0.000 - 60.000	s	0.001	0.000	Time delay for reset.

3.10 Multipurpose protection

3.10.1 General current and voltage protection CVGAPC

Function description	IEC 61850 identification	IEC 60617 identification	ANSI/IEEE C37.2 device number
General current and voltage protection	CVGAPC	-	-

3.10.1.1 Application

A breakdown of the insulation between phase conductors or a phase conductor and ground results in a short circuit or a ground fault. Such faults can result in large fault currents and may cause severe damage to the power system primary equipment. Depending on the magnitude and type of the fault different overcurrent protections, based on measurement of phase, ground or sequence current components can be used to clear these faults. Additionally it is sometimes required that these overcurrent protections shall be directional and/or voltage controlled/restrained.

The over/under voltage protection is applied on power system elements, such as generators, transformers, motors and power lines in order to detect abnormal voltage conditions. Depending on the type of voltage deviation and type of power system abnormal condition different over/under voltage protections based on measurement of phase-to-ground, phase-to-phase, residual- or sequence- voltage components can be used to detect and operate for such incident.

The IED can be provided with multiple General current and voltage protection (CVGAPC) protection modules. The function is always connected to three-phase current and three-phase voltage input in the configuration tool, but it will always measure only one current and one voltage quantity selected by the end user in the setting tool.

Each CVGAPC function module has got four independent protection elements built into it.

1. Two overcurrent steps with the following built-in features:
   - Definite time delay or Inverse Time Overcurrent TOC/IDMT delay for both steps
   - Second harmonic supervision is available in order to only allow operation of the overcurrent stage(s) if the content of the second harmonic in the measured current is lower than pre-set level
   - Directional supervision is available in order to only allow operation of the overcurrent stage(s) if the fault location is in the pre-set direction (*Forward*

or *Reverse*). Its behavior during low-level polarizing voltage is settable (*Non-Directional*,*Block*,*Memory*)
    - Voltage restrained/controlled feature is available in order to modify the pick-up level of the overcurrent stage(s) in proportion to the magnitude of the measured voltage
    - Current restrained feature is available in order to only allow operation of the overcurrent stage(s) if the measured current quantity is bigger than the set percentage of the current restrain quantity.
2. Two undercurrent steps with the following built-in features:
    - Definite time delay for both steps
3. Two overvoltage steps with the following built-in features
    - Definite time delay or Inverse Time Overcurrent TOC/IDMT delay for both steps
4. Two undervoltage steps with the following built-in features
    - Definite time delay or Inverse Time Overcurrent TOC/IDMT delay for both steps

All these four protection elements within one general protection function works independently from each other and they can be individually enabled or disabled. However it shall be once more noted that all these four protection elements measure one selected current quantity and one selected voltage quantity (see table 142 and table 143). It is possible to simultaneously use all four-protection elements and their individual stages. Sometimes in order to obtain desired application functionality it is necessary to provide interaction between two or more protection elements/stages within one CVGAPC function by appropriate IED configuration (for example, dead machine protection for generators).

Current and voltage selection for CVGAPC function

CVGAPC function is always connected to three-phase current and three-phase voltage input in the configuration tool, but it will always measure only the single current and the single voltage quantity selected by the end user in the setting tool (selected current quantity and selected voltage quantity).

The user can select, by a setting parameter *CurrentInput*, to measure one of the following current quantities shown in table 142.

Table 142: Available selection for current quantity within CVGAPC function

	Set value for parameter "CurrentInput"	Comment
1	*PhaseA*	CVGAPC function will measure the phase A current phasor
2	*PhaseB*	CVGAPC function will measure the phase B current phasor
3	*PhaseC*	CVGAPC function will measure the phase C current phasor

Table continues on next page

	Set value for parameter "CurrentInput"	Comment
4	*PosSeq*	CVGAPC function will measure internally calculated positive sequence current phasor
5	*NegSeq*	CVGAPC function will measure internally calculated negative sequence current phasor
6	*3 · ZeroSeq*	CVGAPC function will measure internally calculated zero sequence current phasor multiplied by factor 3
7	*MaxPh*	CVGAPC function will measure current phasor of the phase with maximum magnitude
8	*MinPh*	CVGAPC function will measure current phasor of the phase with minimum magnitude
9	*UnbalancePh*	CVGAPC function will measure magnitude of unbalance current, which is internally calculated as the algebraic magnitude difference between the current phasor of the phase with maximum magnitude and current phasor of the phase with minimum magnitude. Phase angle will be set to 0° all the time
10	*PhaseA-PhaseB*	CVGAPC function will measure the current phasor internally calculated as the vector difference between the phase A current phasor and phase B current phasor (VA-VB)
11	*PhaseB-PhaseC*	CVGAPC function will measure the current phasor internally calculated as the vector difference between the phase B current phasor and phase C current phasor (VB-VC)
12	*PhaseC-PhaseA*	CVGAPC function will measure the current phasor internally calculated as the vector difference between the phase C current phasor and phase A current phasor (VC-VA)
13	*MaxPh-Ph*	CVGAPC function will measure ph-ph current phasor with the maximum magnitude
14	*MinPh-Ph*	CVGAPC function will measure ph-ph current phasor with the minimum magnitude
15	*UnbalancePh-Ph*	CVGAPC function will measure magnitude of unbalance current, which is internally calculated as the algebraic magnitude difference between the ph-ph current phasor with maximum magnitude and ph-ph current phasor with minimum magnitude. Phase angle will be set to 0° all the time

The user can select, by a setting parameter *VoltageInput*, to measure one of the following voltage quantities shown in table 143.

Table 143: Available selection for voltage quantity within CVGAPC function

	Set value for parameter "VoltageInput"	Comment
1	*PhaseA*	CVGAPC function will measure the phase A voltage phasor
2	*PhaseB*	CVGAPC function will measure the phase B voltage phasor
3	*PhaseC*	CVGAPC function will measure the phase C voltage phasor
4	*PosSeq*	CVGAPC function will measure internally calculated positive sequence voltage phasor

Table continues on next page

	Set value for parameter "VoltageInput"	Comment
5	*-NegSeq*	CVGAPC function will measure internally calculated negative sequence voltage phasor. This voltage phasor will be intentionally rotated for 180° in order to enable easier settings for the directional feature when used.
6	*-3*ZeroSeq*	CVGAPC function will measure internally calculated zero sequence voltage phasor multiplied by factor 3. This voltage phasor will be intentionally rotated for 180° in order to enable easier settings for the directional feature when used.
7	*MaxPh*	CVGAPC function will measure voltage phasor of the phase with maximum magnitude
8	*MinPh*	CVGAPC function will measure voltage phasor of the phase with minimum magnitude
9	*UnbalancePh*	CVGAPC function will measure magnitude of unbalance voltage, which is internally calculated as the algebraic magnitude difference between the voltage phasor of the phase with maximum magnitude and voltage phasor of the phase with minimum magnitude. Phase angle will be set to 0° all the time
10	*PhaseA-PhaseB*	CVGAPC function will measure the voltage phasor internally calculated as the vector difference between the phase A voltage phasor and phase B voltage phasor (VA-VB)
11	*PhaseB-PhaseC*	CVGAPC function will measure the voltage phasor internally calculated as the vector difference between the phase B voltage phasor and phase C voltage phasor (VB-VC)
12	*PhaseC-PhaseC*	CVGAPC function will measure the voltage phasor internally calculated as the vector difference between the phase C voltage phasor and phase A voltage phasor (VC-VA)
13	*MaxPh-Ph*	CVGAPC function will measure ph-ph voltage phasor with the maximum magnitude
14	*MinPh-Ph*	CVGAPC function will measure ph-ph voltage phasor with the minimum magnitude
15	*UnbalancePh-Ph*	CVGAPC function will measure magnitude of unbalance voltage, which is internally calculated as the algebraic magnitude difference between the ph-ph voltage phasor with maximum magnitude and ph-ph voltage phasor with minimum magnitude. Phase angle will be set to 0° all the time

It is important to notice that the voltage selection from table 143 is always applicable regardless the actual external VT connections. The three-phase VT inputs can be connected to IED as either three phase-to-groundvoltages VA, VB and VC or three phase-to-phase voltages VAB, VBC and VCA. This information about actual VT connection is entered as a setting parameter for the pre-processing block, which will then take automatically care about it.

Base quantities for CVGAPC function

The parameter settings for the base quantities, which represent the base (100%) for pickup levels of all measuring stages shall be entered as setting parameters for every CVGAPC function.

Base current shall be entered as:

1. rated phase current of the protected object in primary amperes, when the measured Current Quantity is selected from 1 to 9, as shown in table 142.
2. rated phase current of the protected object in primary amperes multiplied by √3 (1.732 x Iphase), when the measured Current Quantity is selected from 10 to 15, as shown in table 142.

Base voltage shall be entered as:

1. rated phase-to-ground voltage of the protected object in primary kV, when the measured Voltage Quantity is selected from 1 to 9, as shown in table 143.
2. rated phase-to-phase voltage of the protected object in primary kV, when the measured Voltage Quantity is selected from 10 to 15, as shown in table 143.

Application possibilities

Due to its flexibility the general current and voltage protection (CVGAPC) function can be used, with appropriate settings and configuration in many different applications. Some of possible examples are given below:

1. Transformer and line applications:
   - Underimpedance protection (circular, non-directional characteristic) (21)
   - Underimpedance protection (circular mho characteristic) (21)
   - Voltage Controlled/Restrained Overcurrent protection (51C, 51V)
   - Phase or Negative/Positive/Zero Sequence (Non-Directional or Directional) Overcurrent protection (50, 51, 46, 67, 67N, 67Q)
   - Phase or phase-to-phase or Negative/Positive/Zero Sequence over/under voltage protection (27, 59, 47)
   - Special thermal overload protection (49)
   - Open Phase protection
   - Unbalance protection
2. Generator protection
   - 80-95% Stator earth fault protection (measured or calculated 3Vo) (59GN)
   - Rotor earth fault protection (with external COMBIFLEX RXTTE4 injection unit) (64F)
   - Underimpedance protection (21)
   - Voltage Controlled/Restrained Overcurrent protection (51C, 51V)

- Turn-to-Turn & Differential Backup protection (directional Negative Sequence. Overcurrent protection connected to generator HV terminal CTs looking into generator) (67Q)
- Stator Overload protection (49S)
- Rotor Overload protection (49R)
- Loss of Excitation protection (directional pos. seq. OC protection) (40)
- Reverse power/Low forward power protection (directional pos. seq. OC protection, 2% sensitivity) (32)
- Dead-Machine/Inadvertent-Energizing protection (51/27)
- Breaker head flashover protection
- Improper synchronizing detection
- Sensitive negative sequence generator over current protection and alarm (46)
- Phase or phase-to-phase or Negative/Positive/Zero Sequence over/under voltage protection (27x, 59x, 47)
- Generator out-of-step detection (based on directional pos. seq. OC) (78)
- Inadvertent generator energizing

Inadvertent generator energization

When the generator is taken out of service, and stand-still, there is a risk that the generator circuit breaker is closed by mistake.

Three-phase energizing of a generator, which is at standstill or on turning gear, causes it to behave and accelerate similarly to an induction motor. The machine, at this point, essentially represents the subtransient reactance to the system and it can be expected to draw from one to four per unit current, depending on the equivalent system impedance. Machine terminal voltage can range from 20% to 70% of rated voltage, again, depending on the system equivalent impedance (including the block transformer). Higher quantities of machine current and voltage (3 to 4 per unit current and 50% to 70% rated voltage) can be expected if the generator is connected to a strong system. Lower current and voltage values (1 to 2 per unit current and 20% to 40% rated voltage) are representative of weaker systems.

Since a generator behaves similarly to an induction motor, high currents will develop in the rotor during the period it is accelerating. Although the rotor may be thermally damaged from excessive high currents, the time to damage will be on the order of a few seconds. Of more critical concern, however, is the bearing, which can be damaged in a fraction of a second due to low oil pressure. Therefore, it is essential that high speed tripping is provided. This tripping should be almost instantaneous (< 100 ms).

There is a risk that the current into the generator at inadvertent energization will be limited so that the “normal” overcurrent or underimpedance protection will not detect the dangerous situation. The delay of these protection functions might be too long. The reverse power protection might detect the situation but the operation time of this protection is normally too long.

For big and important machines, fast protection against inadvertent energizing should, therefore, be included in the protective scheme.

The protection against inadvertent energization can be made by a combination of undervoltage, overvoltage and overcurrent protection functions. The undervoltage function will, with a delay for example 10 s, detect the situation when the generator is not connected to the grid (standstill) and activate the overcurrent function. The overvoltage function will detect the situation when the generator is taken into operation and will disable the overcurrent function. The overcurrent function will have a pick-up value about 50% of the rated current of the generator. The trip delay will be about 50 ms.

3.10.1.2 Setting guidelines

When inverse time overcurrent characteristic is selected, the operate time of the stage will be the sum of the inverse time delay and the set definite time delay. Thus, if only the inverse time delay is required, it is of utmost importance to set the definite time delay for that stage to zero.

The parameters for the general current and voltage protection function (CVGAPC) are set via the local HMI or Protection and Control Manager (PCM600).

The overcurrent steps has a *IMinx* (*x*=1 or 2 depending on step) setting to set the minimumpickup current. Set *IMinx* below *PickupCurr_OCx* for every step to achieve ANSI reset characteristic according to standard. If *IMinx* is set above *PickupCurr_OCx* for any step the ANSI reset works as if current is zero when current drops below *IMinx*.

Directional negative sequence overcurrent protection

Directional negative sequence overcurrent protection is typically used as sensitive ground-fault protection of power lines were incorrect zero sequence polarization may result from mutual induction between two or more parallel lines. Additionally, it can be used in applications on underground cables where zero-sequence impedance depends on the fault current return paths, but the cable negative-sequence impedance is practically constant. It shall be noted that directional negative sequence OC element offers protection against all unbalance faults (phase-to-phase faults as well). Care shall be taken that the minimum pickup of such protection function shall be set above natural system unbalance level.

An example will be given, how sensitive-ground-fault protection for power lines can be achieved by using negative-sequence directional overcurrent protection elements within a CVGAPC function.

This functionality can be achieved by using one CVGAPC function. The following shall be done to ensure proper operation of the function:

1. Connect three-phase power line currents and three-phase power line voltages to one CVGAPC instance (for example, GF04)
2. Set *CurrentInput* to *NegSeq* (please note that CVGAPC function measures I2 current and NOT 3I2 current; this is essential for proper OC pickup level setting)
3. Set *VoltageInput* to -*NegSeq* (please note that the negative sequence voltage phasor is intentionally inverted in order to simplify directionality
4. Set base current *IBase* value equal to the rated primary current of power line CTs
5. Set base voltage *UBase* value equal to the rated power line phase-to-phase voltage in kV
6. Set *RCADir* to value +65 degrees (*NegSeq* current typically lags the inverted *NegSeq* voltage for this angle during the fault)
7. Set *ROADir* to value 90 degree
8. Set *LowVolt_VM* to value 2% (*NegSeq* voltage level above which the directional element will be enabled)
9. Enable one overcurrent stage (for example, OC1)
10. By parameter *CurveType_OC1* select appropriate TOC/IDMT or definite time delayed curve in accordance with your network protection philosophy
11. Set *PickupCurr_OC1* to value between 3-10% (typical values)
12. Set *tDef_OC1* or parameter “TD” when TOC/IDMT curves are used to insure proper time coordination with other ground-fault protections installed in the vicinity of this power line
13. Set *DirMode_OC1* to *Forward*
14. Set *DirPrinc_OC1* to *IcosPhi&U*
15. Set *ActLowVolt1_VM* to *Block*
    - In order to insure proper restraining of this element for CT saturations during three-phase faults it is possible to use current restraint feature and enable this element to operate only when *NegSeq* current is bigger than a certain percentage (10% is typical value) of measured *PosSeq* current in the power line. To do this the following settings within the same function shall be done:
16. Set *EnRestrainCurr* to *On*
17. Set *RestrCurrInput* to *PosSeq*
18. Set *RestrCurrCoeff* to value 0.1

If required, this CVGAPC function can be used in directional comparison protection scheme for the power line protection if communication channels to the remote end of this power line are available. In that case typically two *NegSeq* overcurrent steps are required. One for forward and one for reverse direction. As explained before the OC1 stage can be used to detect faults in forward direction. The built-in OC2 stage can be used to detect faults in reverse direction.

However the following shall be noted for such application:

- the set values for *RCADir* and *ROADir* settings will be as well applicable for OC2 stage
- setting *DirMode_OC2* shall be set to *Reverse*
- setting parameter *PickupCurr_OC2* shall be made more sensitive than pickup value of forward OC1 element (that is, typically 60% of OC1 set pickup level) in order to insure proper operation of the directional comparison scheme during current reversal situations
- pickup signals from OC1 and OC2 elements shall be used to send forward and reverse signals to the remote end of the power line
- the available scheme communications function block within IED shall be used between multipurpose protection function and the communication equipment in order to insure proper conditioning of the above two pickup signals

Furthermore the other built-in UC, OV and UV protection elements can be used for other protection and alarming purposes.

Negative sequence overcurrent protection

Example will be given how to use one CVGAPC function to provide negative sequence inverse time overcurrent protection for a generator with capability constant of 20s, and maximum continuous negative sequence rating of 7% of the generator rated current.

The capability curve for a generator negative sequence overcurrent protection, often used world-wide, is defined by the ANSI standard in accordance with the following formula:

$$t_{op} = \frac{TD}{\left(\frac{I_{NS}}{I_r}\right)^2}$$

(Equation 403)

where:

t_{op}	is the operating time in seconds of the negative sequence overcurrent IED
TD	is the generator capability constant in seconds
I_{NS}	is the measured negative sequence current
I_r	is the generator rated current

By defining parameter x equal to maximum continuous negative sequence rating of the generator in accordance with the following formula

$$x = 7\% = 0.07\,pu$$

(Equation 404)

Equation 403 can be re-written in the following way without changing the value for the operate time of the negative sequence inverse overcurrent IED:

$$t_{op} = \frac{TD \cdot \frac{1}{x^2}}{\left(\frac{I_{NS}}{x \cdot I_r}\right)^2}$$

(Equation 405)

In order to achieve such protection functionality with one CVGAPC functions the following must be done:

1. Connect three-phase generator currents to one CVGAPC instance (for example, GF01)
2. Set parameter *CurrentInput* to value *NegSeq*
3. Set base current value to the rated generator current in primary amperes
4. Enable one overcurrent step (for example, OC1)
5. Select parameter *CurveType_OC1* to value *Programmable*

$$t_{op} = TD \cdot \left(\frac{A}{M^P - C} + B\right)$$

(Equation 406)

where:

t*op*	is the operating time in seconds of the Inverse Time Overcurrent TOC/IDMT algorithm
TD	is time multiplier (parameter setting)
M	is ratio between measured current magnitude and set pickup current level
A, B, C and P	are user settable coefficients which determine the curve used for Inverse Time Overcurrent TOC/IDMT calculation

When the equation 403 is compared with the equation 405 for the inverse time characteristic of the OC1 it is obvious that if the following rules are followed:

1. set TD equal to the generator negative sequence capability value
2. set *A_OC1* equal to the value 1/x2
3. set *B_OC1* = 0.0, *C_OC1*=0.0 and *P_OC1*=2.0
4. set *PickupCurr_OC1* equal to the value x

then the OC1 step of the CVGAPC function can be used for generator negative sequence inverse overcurrent protection.

For this particular example the following settings shall be entered to insure proper function operation:

1. select negative sequence current as measuring quantity for this CVGAPC function
2. make sure that the base current value for the CVGAPC function is equal to the generator rated current
3. set *TD_OC1* = 20
4. set *A_OC1*= $1/0.07^2$ = 204.0816
5. set *B_OC1* = 0.0, C_OC1 = 0.0 and *P_OC1* = 2.0
6. set *PickupCurr_OC1* = 7%

Proper timing of the CVGAPC function made in this way can easily be verified by secondary injection. All other settings can be left at the default values. If required delayed time reset for OC1 step can be set in order to ensure proper function operation in case of repetitive unbalance conditions.

Furthermore the other built-in protection elements can be used for other protection and alarming purposes (for example, use OC2 for negative sequence overcurrent alarm and OV1 for negative sequence overvoltage alarm).

Generator stator overload protection in accordance with IEC or ANSI standards

Example will be given how to use one CVGAPC function to provide generator stator overload protection in accordance with IEC or ANSI standard if minimum-operating current shall be set to 116% of generator rating.

The generator stator overload protection is defined by IEC or ANSI standard for turbo generators in accordance with the following formula:

$$t_{op} = \frac{TD}{\left(\frac{I_m}{I_r}\right)^2 - 1}$$

(Equation 407)

where:

t_{op}	is the operating time of the generator stator overload IED
TD	is the generator capability constant in accordance with the relevant standard (TD = 37.5 for the IEC standard or TD = 41.4 for the ANSI standard)
I_m	is the magnitude of the measured current
I_r	is the generator rated current

This formula is applicable only when measured current (for example, positive sequence current) exceeds a pre-set value (typically in the range from 105 to 125% of the generator rated current).

By defining parameter x equal to the per unit value for the desired pickup for the overload IED in accordance with the following formula:

$$x = 116\% = 1.16\,pu$$

(Equation 408)

formula 3.5can be re-written in the following way without changing the value for the operate time of the generator stator overload IED:

$$t_{op} = \frac{TD \cdot \frac{1}{x^2}}{\left(\frac{I_m}{x \cdot I_r}\right)^2 - \frac{1}{x^2}}$$

(Equation 409)

In order to achieve such protection functionality with one CVGAPC functions the following must be done:

1. Connect three-phase generator currents to one CVGAPC instance (for example, GF01)
2. Set parameter *CurrentInput* to value *PosSeq*
3. Set base current value to the rated generator current in primary amperes
4. Enable one overcurrent step (for example OC1)
5. Select parameter *CurveType_OC1* to value *Programmable*

$$t_{op} = TD \cdot \left(\frac{A}{M^P - C} + B\right)$$

(Equation 410)

where:

t_{op}	is the operating time in seconds of the Inverse Time Overcurrent TOC/IDMT algorithm
TD	is time multiplier (parameter setting)
M	is ratio between measured current magnitude and set pickup current level
A, B, C and P	are user settable coefficients which determine the curve used for Inverse Time Overcurrent TOC/IDMT calculation

When the equation 409 is compared with the equation 410 for the inverse time characteristic of the OC1 step in it is obvious that if the following rules are followed:

1. set TD equal to the IEC or ANSI standard generator capability value
2. set parameter *A_OC1* equal to the value 1/x2
3. set parameter *C_OC1* equal to the value 1/x2
4. set parameters *B_OC1* = 0.0 and *P_OC1*=2.0
5. set *PickupCurr_OC1* equal to the value x

then the OC1 step of the CVGAPC function can be used for generator negative sequence inverse overcurrent protection.

1. select positive sequence current as measuring quantity for this CVGAPC function
2. make sure that the base current value for CVGAPC function is equal to the generator rated current
3. set TD = 37.5 for the IEC standard or TD = 41.4 for the ANSI standard
4. set *A_OC1*= 1/1.162 = 0.7432
5. set *C_OC1*= 1/1.162 = 0.7432
6. set *B_OC1* = 0.0 and *P_OC1* = 2.0
7. set *PickupCurr_OC1* = 116%

Proper timing of CVGAPC function made in this way can easily be verified by secondary injection. All other settings can be left at the default values. If required delayed time reset for OC1 step can be set in order to insure proper function operation in case of repetitive overload conditions.

Furthermore the other built-in protection elements can be used for other protection and alarming purposes.

In the similar way rotor overload protection in accordance with ANSI standard can be achieved.

Open phase protection for transformer, lines or generators and circuit breaker head flashover protection for generators

Example will be given how to use one CVGAPC function to provide open phase protection. This can be achieved by using one CVGAPC function by comparing the unbalance current with a pre-set level. In order to make such a function more secure it is possible to restrain it by requiring that at the same time the measured unbalance current must be bigger than 97% of the maximum phase current. By doing this it will be insured that function can only pickup if one of the phases is open circuited. Such an arrangement is easy to obtain in CVGAPC function by enabling the current restraint feature. The following shall be done in order to insure proper operation of the function:

1. Connect three-phase currents from the protected object to one CVGAPC instance (for example, GF03)
2. Set *CurrentInput* to value *UnbalancePh*
3. Set *EnRestrainCurr* to *On*
4. Set *RestrCurrInput* to *MaxPh*
5. Set *RestrCurrCoeff* to value 0.97
6. Set base current value to the rated current of the protected object in primary amperes
7. Enable one overcurrent step (for example, OC1)
8. Select parameter *CurveType_OC1* to value *IEC Def. Time*
9. Set parameter *PickupCurr_OC1* to value 5%
10. Set parameter *tDef_OC1* to desired time delay (for example, 2.0s)

Proper operation of CVGAPC function made in this way can easily be verified by secondary injection. All other settings can be left at the default values. However it shall be noted that set values for restrain current and its coefficient will as well be applicable for OC2 step as soon as it is enabled.

Furthermore the other built-in protection elements can be used for other protection and alarming purposes. For example, in case of generator application by enabling OC2 step with set pickup to 200% and time delay to 0.1s simple but effective protection against circuit breaker head flashover protection is achieved.

Voltage restrained overcurrent protection for generator and step-up transformer

Example will be given how to use one CVGAPC function to provide voltage restrained overcurrent protection for a generator. Let us assume that the time coordination study gives the following required settings:

- Inverse Time Over Current TOC/IDMT curve: ANSI very inverse
- Pickup current of 185% of generator rated current at rated generator voltage
- Pickup current 25% of the original pickup current value for generator voltages below 25% of rated voltage

This functionality can be achieved by using one CVGAPC function. The following shall be done in order to insure proper operation of the function:

1. Connect three-phase generator currents and voltages to one CVGAPC instance (for example, GF05)
2. Set *CurrentInput* to value *MaxPh*
3. Set *VoltageInput* to value *MinPh-Ph* (it is assumed that minimum phase-to-phase voltage shall be used for restraining. Alternatively, positive sequence voltage can be used for restraining by selecting *PosSeq* for this setting parameter)
4. Set base current value to the rated generator current primary amperes
5. Set base voltage value to the rated generator phase-to-phase voltage in kV
6. Enable one overcurrent step (for example, OC1)

7. Select *CurveType_OC1* to value *ANSI Very inv*
8. If required set minimum operating time for this curve by using parameter *tMin_OC1* (default value 0.05s)
9. Set *PickupCurr_OC1* to value 185%
10. Set *VCntrlMode_OC1* to *On*
11. Set *VDepMode_OC1* to *Slope*
12. Set *VDepFact_OC1* to value 0.25
13. Set *VHighLimit_OC1* to value 100%
14. Set *VLowLimit_OC1* to value 25%

Proper operation of the CVGAPC function made in this way can easily be verified by secondary injection. All other settings can be left at the default values. Furthermore the other built-in protection elements can be used for other protection and alarming purposes.

Loss of excitation protection for a generator

Example will be given how by using positive sequence directional overcurrent protection element within a CVGAPC function, loss of excitation protection for a generator can be achieved. Let us assume that from rated generator data the following values are calculated:

- Maximum generator capability to contentiously absorb reactive power at zero active loading 38% of the generator MVA rating
- Generator pull-out angle 84 degrees

This functionality can be achieved by using one CVGAPC function. The following shall be done in order to insure proper operation of the function:

1. Connect three-phase generator currents and three-phase generator voltages to one CVGAPC instance (for example, GF02)
2. Set parameter *CurrentInput* to *PosSeq*
3. Set parameter *VoltageInput* to *PosSeq*
4. Set base current value to the rated generator current primary amperes
5. Set base voltage value to the rated generator phase-to-phase voltage in kV
6. Set parameter *RCADir* to value -84 degree (that is, current lead voltage for this angle)
7. Set parameter *ROADir* to value 90 degree
8. Set parameter *LowVolt_VM* to value 5%
9. Enable one overcurrent step (for example, OC1)
10. Select parameter *CurveType_OC1* to value *IEC Def. Time*
11. Set parameter *PickupCurr_OC1* to value 38%
12. Set parameter *tDef_OC1* to value 2.0s (typical setting)
13. Set parameter *DirMode_OC1* to *Forward*
14. Set parameter *DirPrinc_OC1* to *IcosPhi&V*
15. Set parameter *ActLowVolt1_VM* to *Block*

Proper operation of the CVGAPC function made in this way can easily be verified by secondary injection. All other settings can be left at the default values. However it shall be noted that set values for RCA & ROA angles will be applicable for OC2 step if directional feature is enabled for this step as well. Figure 228 shows overall protection characteristic

Furthermore the other build-in protection elements can be used for other protection and alarming purposes.

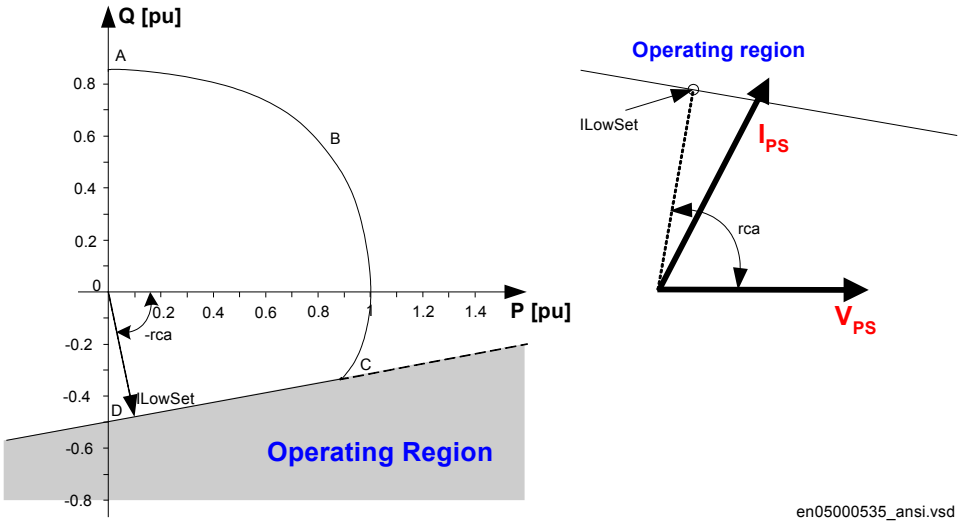

Figure 228: Loss of excitation

3.10.1.3 Setting parameters

Table 144: CVGAPC Group settings (basic)

Name	Values (Range)	Unit	Step	Default	Description
Operation	Disabled Enabled	-	-	Disabled	Disable/Enable Operation
CurrentInput	Phase A Phase B Phase C PosSeq NegSeq 3*ZeroSeq MaxPh MinPh UnbalancePh Phase AB Phase BC Phase CA MaxPh-Ph MinPh-Ph UnbalancePh-Ph	-	-	MaxPh	Select current signal which will be measured inside function
IBase	1 - 99999	A	1	3000	Base Current
VoltageInput	Phase A Phase B Phase C PosSeq -NegSeq -3*ZeroSeq MaxPh MinPh UnbalancePh Phase AB Phase BC Phase CA MaxPh-Ph MinPh-Ph UnbalancePh-Ph	-	-	MaxPh	Select voltage signal which will be measured inside function
VBase	0.05 - 2000.00	kV	0.05	400.00	Base Voltage
OperHarmRestr	Disabled Enabled	-	-	Disabled	Disable/Enable operation of 2nd harmonic restrain
I_2nd/I_fund	10.0 - 50.0	%	1.0	20.0	Ratio of second to fundamental current harmonic in %
EnRestrainCurr	Disabled Enabled	-	-	Disabled	Disable/Enable current restrain function
RestrCurrInput	PosSeq NegSeq 3*ZeroSeq Max	-	-	PosSeq	Select current signal which will be used for current restrain
RestrCurrCoeff	0.00 - 5.00	-	0.01	0.00	Restraining current coefficient
RCADir	-180 - 180	Deg	1	-75	Relay Characteristic Angle
ROADir	1 - 90	Deg	1	75	Relay Operate Angle

Table continues on next page

Name	Values (Range)	Unit	Step	Default	Description
LowVolt_VM	0.0 - 5.0	%VB	0.1	0.5	Below this level in % of Vbase setting ActLowVolt takes over
Operation_OC1	Disabled Enabled	-	-	Disabled	Disable/Enable Operation of OC1
PickupCurr_OC1	2.0 - 5000.0	%IB	1.0	120.0	Pickup current for OC1 in % of Ibase
CurveType_OC1	ANSI Ext. inv. ANSI Very inv. ANSI Norm. inv. ANSI Mod. inv. ANSI Def. Time L.T.E. inv. L.T.V. inv. L.T. inv. IEC Norm. inv. IEC Very inv. IEC inv. IEC Ext. inv. IEC S.T. inv. IEC L.T. inv. IEC Def. Time Programmable RI type RD type	-	-	ANSI Def. Time	Selection of time delay curve type for OC1
tDef_OC1	0.00 - 6000.00	s	0.01	0.50	Independent (definitive) time delay of OC1
TD_OC1	0.05 - 999.00	-	0.01	0.30	Time multiplier for the dependent time delay for OC1
IMin1	1 - 10000	%IB	1	100	Minimum operate current for step1in% of IBase
tMin_OC1	0.00 - 6000.00	s	0.01	0.05	Minimum operate time for IEC IDMT curves for OC1
VCntrlMode_OC1	Voltage control Input control Volt/Input control Disabled	-	-	Disabled	Control mode for voltage controlled OC1 function
VDepMode_OC1	Step Slope	-	-	Step	Voltage dependent mode OC1 (step, slope)
VDepFact_OC1	0.02 - 5.00	-	0.01	1.00	Multiplying factor for current pickup when OC1 is voltage dependent
VLowLimit_OC1	1.0 - 200.0	%VB	0.1	50.0	Voltage low limit setting OC1 in % of Vbase
VHighLimit_OC1	1.0 - 200.0	%VB	0.1	100.0	Voltage high limit setting OC1 in % of Vbase
HarmRestr_OC1	Disabled Enabled	-	-	Disabled	Enable block of OC1 by 2nd harmonic restrain
DirMode_OC1	Non-directional Forward Reverse	-	-	Non-directional	Directional mode of OC1 (nondir, forward,reverse)
DirPrinc_OC1	I&V IcosPhi&U	-	-	I&V	Measuring on IandV or IcosPhiandV for OC1
ActLowVolt1_VM	Non-directional Block Memory	-	-	Non-directional	Low voltage level action for Dir_OC1 (Nodir, Blk, Mem)

Table continues on next page

Name	Values (Range)	Unit	Step	Default	Description
Operation_OC2	Disabled Enabled	-	-	Disabled	Disable/Enable Operation od OC2
PickupCurr_OC2	2.0 - 5000.0	%IB	1.0	120.0	Pickup current for OC2 in % of Ibase
CurveType_OC2	ANSI Ext. inv. ANSI Very inv. ANSI Norm. inv. ANSI Mod. inv. ANSI Def. Time L.T.E. inv. L.T.V. inv. L.T. inv. IEC Norm. inv. IEC Very inv. IEC inv. IEC Ext. inv. IEC S.T. inv. IEC L.T. inv. IEC Def. Time Programmable RI type RD type	-	-	ANSI Def. Time	Selection of time delay curve type for OC2
tDef_OC2	0.00 - 6000.00	s	0.01	0.50	Independent (definitive) time delay of OC2
TD_OC2	0.05 - 999.00	-	0.01	0.30	Time multiplier for the dependent time delay for OC2
IMin2	1 - 10000	%IB	1	50	Minimum operate current for step2 in % of IBase
tMin_OC2	0.00 - 6000.00	s	0.01	0.05	Minimum operate time for IEC IDMT curves for OC2
VCntrlMode_OC2	Voltage control Input control Volt/Input control Disabled	-	-	Disabled	Control mode for voltage controlled OC2 function
VDepMode_OC2	Step Slope	-	-	Step	Voltage dependent mode OC2 (step, slope)
VDepFact_OC2	0.02 - 5.00	-	0.01	1.00	Multiplying factor for current pickup when OC2 is voltage dependent
VLowLimit_OC2	1.0 - 200.0	%VB	0.1	50.0	Voltage low limit setting OC2 in % of Vbase
VHighLimit_OC2	1.0 - 200.0	%VB	0.1	100.0	Voltage high limit setting OC2 in % of Vbase
HarmRestr_OC2	Disabled Enabled	-	-	Disabled	Enable block of OC2 by 2nd harmonic restrain
DirMode_OC2	Non-directional Forward Reverse	-	-	Non-directional	Directional mode of OC2 (nondir, forward,reverse)
DirPrinc_OC2	I&V IcosPhi&U	-	-	I&V	Measuring on IandV or IcosPhiandV for OC2
ActLowVolt2_VM	Non-directional Block Memory	-	-	Non-directional	Low voltage level action for Dir_OC2 (Nodir, Blk, Mem)

Table continues on next page

Name	Values (Range)	Unit	Step	Default	Description
Operation_UC1	Disabled Enabled	-	-	Disabled	Disable/Enable operation of UC1
EnBlkLowI_UC1	Disabled Enabled	-	-	Disabled	Enable internal low current level blocking for UC1
BlkLowCurr_UC1	0 - 150	%IB	1	20	Internal low current blocking level for UC1 in % of Ibase
PickupCurr_UC1	2.0 - 150.0	%IB	1.0	70.0	Operate undercurrent level for UC1 in % of Ibase
tDef_UC1	0.00 - 6000.00	s	0.01	0.50	Independent (definitive) time delay of UC1
tResetDef_UC1	0.00 - 6000.00	s	0.01	0.00	Reset time delay used in IEC Definite Time curve UC1
HarmRestr_UC1	Disabled Enabled	-	-	Disabled	Enable block of UC1 by 2nd harmonic restrain
Operation_UC2	Disabled Enabled	-	-	Disabled	Disable/Enable operation of UC2
EnBlkLowI_UC2	Disabled Enabled	-	-	Disabled	Enable internal low current level blocking for UC2
BlkLowCurr_UC2	0 - 150	%IB	1	20	Internal low current blocking level for UC2 in % of Ibase
PickupCurr_UC2	2.0 - 150.0	%IB	1.0	70.0	Operate undercurrent level for UC2 in % of Ibase
tDef_UC2	0.00 - 6000.00	s	0.01	0.50	Independent (definitive) time delay of UC2
HarmRestr_UC2	Disabled Enabled	-	-	Disabled	Enable block of UC2 by 2nd harmonic restrain
Operation_OV1	Disabled Enabled	-	-	Disabled	Disable/Enable operation of OV1
PickupVolt_OV1	2.0 - 200.0	%VB	0.1	150.0	Operate voltage level for OV1 in % of Vbase
CurveType_OV1	Definite time Inverse curve A Inverse curve B Inverse curve C Prog. inv. curve	-	-	Definite time	Selection of time delay curve type for OV1
tDef_OV1	0.00 - 6000.00	s	0.01	1.00	Operate time delay in sec for definite time use of OV1
tMin_OV1	0.00 - 6000.00	s	0.01	0.05	Minimum operate time for Inverse-Time curves for OV1
TD_OV1	0.05 - 999.00	-	0.01	0.30	Time multiplier for the dependent time delay for OV1
Operation_OV2	Disabled Enabled	-	-	Disabled	Disable/Enable operation of OV2
PickupVolt_OV2	2.0 - 200.0	%VB	0.1	150.0	Pickup voltage for OV2 in % of Vbase
CurveType_OV2	Definite time Inverse curve A Inverse curve B Inverse curve C Prog. inv. curve	-	-	Definite time	Selection of time delay curve type for OV2

Table continues on next page

Name	Values (Range)	Unit	Step	Default	Description
tDef_OV2	0.00 - 6000.00	s	0.01	1.00	Operate time delay in sec for definite time use of OV2
tMin_OV2	0.00 - 6000.00	s	0.01	0.05	Minimum operate time for Inverse-Time curves for OV2
TD_OV2	0.05 - 999.00	-	0.01	0.30	Time multiplier for the dependent time delay for OV2
Operation_UV1	Disabled Enabled	-	-	Disabled	Disable/Enable operation of UV1
PickupVolt_UV1	2.0 - 150.0	%VB	0.1	50.0	Operate undervoltage level for UV1 in % of Vbase
CurveType_UV1	Definite time Inverse curve A Inverse curve B Prog. inv. curve	-	-	Definite time	Selection of time delay curve type for UV1
tDef_UV1	0.00 - 6000.00	s	0.01	1.00	Operate time delay in sec for definite time use of UV1
tMin_UV1	0.00 - 6000.00	s	0.01	0.05	Minimum operate time for Inverse-Time curves for UV1
TD_UV1	0.05 - 999.00	-	0.01	0.30	Time multiplier for the dependent time delay for UV1
EnBlkLowV_UV1	Disabled Enabled	-	-	Enabled	Enable internal low voltage level blocking for UV1
BlkLowVolt_UV1	0.0 - 5.0	%VB	0.1	0.5	Internal low voltage blocking level for UV1 in % of Vbase
Operation_UV2	Disabled Enabled	-	-	Disabled	Disable/Enable operation of UV2
PickupVolt_UV2	2.0 - 150.0	%VB	0.1	50.0	Pickup undervoltage for UV2 in % of Vbase
CurveType_UV2	Definite time Inverse curve A Inverse curve B Prog. inv. curve	-	-	Definite time	Selection of time delay curve type for UV2
tDef_UV2	0.00 - 6000.00	s	0.01	1.00	Operate time delay in sec for definite time use of UV2
tMin_UV2	0.00 - 6000.00	s	0.01	0.05	Minimum operate time for Inverse-Time curves for UV2
TD_UV2	0.05 - 999.00	-	0.01	0.30	Time multiplier for the dependent time delay for UV2
EnBlkLowV_UV2	Disabled Enabled	-	-	Enabled	Enable internal low voltage level blocking for UV2
BlkLowVolt_UV2	0.0 - 5.0	%VB	0.1	0.5	Internal low voltage blocking level for UV2 in % of Vbase

Table 145: CVGAPC Group settings (advanced)

Name	Values (Range)	Unit	Step	Default	Description
MultPU_OC1	1.0 - 10.0	-	0.1	2.0	Multiplier for scaling the current setting value for OC1
ResCrvType_OC1	Instantaneous IEC Reset ANSI reset	-	-	Instantaneous	Selection of reset curve type for OC1
tResetDef_OC1	0.00 - 6000.00	s	0.01	0.00	Reset time delay used in IEC Definite Time curve OC1
P_OC1	0.001 - 10.000	-	0.001	0.020	Parameter P for customer programmable curve for OC1
A_OC1	0.000 - 999.000	-	0.001	0.140	Parameter A for customer programmable curve for OC1
B_OC1	0.000 - 99.000	-	0.001	0.000	Parameter B for customer programmable curve for OC1
C_OC1	0.000 - 1.000	-	0.001	1.000	Parameter C for customer programmable curve for OC1
PR_OC1	0.005 - 3.000	-	0.001	0.500	Parameter PR for customer programmable curve for OC1
TR_OC1	0.005 - 600.000	-	0.001	13.500	Parameter TR for customer programmable curve for OC1
CR_OC1	0.1 - 10.0	-	0.1	1.0	Parameter CR for customer programmable curve for OC1
MultPU_OC2	1.0 - 10.0	-	0.1	2.0	Multiplier for scaling the current setting value for OC2
ResCrvType_OC2	Instantaneous IEC Reset ANSI reset	-	-	Instantaneous	Selection of reset curve type for OC2
tResetDef_OC2	0.00 - 6000.00	s	0.01	0.00	Reset time delay used in IEC Definite Time curve OC2
P_OC2	0.001 - 10.000	-	0.001	0.020	Parameter P for customer programmable curve for OC2
A_OC2	0.000 - 999.000	-	0.001	0.140	Parameter A for customer programmable curve for OC2
B_OC2	0.000 - 99.000	-	0.001	0.000	Parameter B for customer programmable curve for OC2
C_OC2	0.000 - 1.000	-	0.001	1.000	Parameter C for customer programmable curve for OC2
PR_OC2	0.005 - 3.000	-	0.001	0.500	Parameter PR for customer programmable curve for OC2
TR_OC2	0.005 - 600.000	-	0.001	13.500	Parameter TR for customer programmable curve for OC2
CR_OC2	0.1 - 10.0	-	0.1	1.0	Parameter CR for customer programmable curve for OC2
tResetDef_UC2	0.00 - 6000.00	s	0.01	0.00	Reset time delay used in IEC Definite Time curve UC2

Table continues on next page

Name	Values (Range)	Unit	Step	Default	Description
ResCrvType_OV1	Instantaneous Frozen timer Linearly decreased	-	-	Instantaneous	Selection of reset curve type for OV1
tResetDef_OV1	0.00 - 6000.00	s	0.01	0.00	Reset time delay in sec for definite time use of OV1
tResetIDMT_OV1	0.00 - 6000.00	s	0.01	0.00	Reset time delay in sec for Inverse-Time curves for OV1
A_OV1	0.005 - 999.000	-	0.001	0.140	Parameter A for customer programmable curve for OV1
B_OV1	0.500 - 99.000	-	0.001	1.000	Parameter B for customer programmable curve for OV1
C_OV1	0.000 - 1.000	-	0.001	1.000	Parameter C for customer programmable curve for OV1
D_OV1	0.000 - 10.000	-	0.001	0.000	Parameter D for customer programmable curve for OV1
P_OV1	0.001 - 10.000	-	0.001	0.020	Parameter P for customer programmable curve for OV1
ResCrvType_OV2	Instantaneous Frozen timer Linearly decreased	-	-	Instantaneous	Selection of reset curve type for OV2
tResetDef_OV2	0.00 - 6000.00	s	0.01	0.00	Reset time delay in sec for definite time use of OV2
tResetIDMT_OV2	0.00 - 6000.00	s	0.01	0.00	Reset time delay in sec for Inverse-Time curves for OV2
A_OV2	0.005 - 999.000	-	0.001	0.140	Parameter A for customer programmable curve for OV2
B_OV2	0.500 - 99.000	-	0.001	1.000	Parameter B for customer programmable curve for OV2
C_OV2	0.000 - 1.000	-	0.001	1.000	Parameter C for customer programmable curve for OV2
D_OV2	0.000 - 10.000	-	0.001	0.000	Parameter D for customer programmable curve for OV2
P_OV2	0.001 - 10.000	-	0.001	0.020	Parameter P for customer programmable curve for OV2
ResCrvType_UV1	Instantaneous Frozen timer Linearly decreased	-	-	Instantaneous	Selection of reset curve type for UV1
tResetDef_UV1	0.00 - 6000.00	s	0.01	0.00	Reset time delay in sec for definite time use of UV1
tResetIDMT_UV1	0.00 - 6000.00	s	0.01	0.00	Reset time delay in sec for Inverse-Time curves for UV1
A_UV1	0.005 - 999.000	-	0.001	0.140	Parameter A for customer programmable curve for UV1
B_UV1	0.500 - 99.000	-	0.001	1.000	Parameter B for customer programmable curve for UV1

Table continues on next page

Name	Values (Range)	Unit	Step	Default	Description
C_UV1	0.000 - 1.000	-	0.001	1.000	Parameter C for customer programmable curve for UV1
D_UV1	0.000 - 10.000	-	0.001	0.000	Parameter D for customer programmable curve for UV1
P_UV1	0.001 - 10.000	-	0.001	0.020	Parameter P for customer programmable curve for UV1
ResCrvType_UV2	Instantaneous Frozen timer Linearly decreased	-	-	Instantaneous	Selection of reset curve type for UV2
tResetDef_UV2	0.00 - 6000.00	s	0.01	0.00	Reset time delay in sec for definite time use of UV2
tResetIDMT_UV2	0.00 - 6000.00	s	0.01	0.00	Reset time delay in sec for Inverse-Time curves for UV2
A_UV2	0.005 - 999.000	-	0.001	0.140	Parameter A for customer programmable curve for UV2
B_UV2	0.500 - 99.000	-	0.001	1.000	Parameter B for customer programmable curve for UV2
C_UV2	0.000 - 1.000	-	0.001	1.000	Parameter C for customer programmable curve for UV2
D_UV2	0.000 - 10.000	-	0.001	0.000	Parameter D for customer programmable curve for UV2
P_UV2	0.001 - 10.000	-	0.001	0.020	Parameter P for customer programmable curve for UV2

3.11 Secondary system supervision

3.11.1 Current circuit supervision CCSRDIF (87)

Function description	IEC 61850 identification	IEC 60617 identification	ANSI/IEEE C37.2 device number
Current circuit supervision	CCSRDIF	-	87

3.11.1.1 Application

Open or short circuited current transformer cores can cause unwanted operation of many protection functions such as differential, ground-fault current and negative-sequence current functions. When currents from two independent three-phase sets of CTs, or CT cores, measuring the same primary currents are available, reliable current circuit supervision can be arranged by comparing the currents from the two sets. If an error in any CT circuit is detected, the protection functions concerned can be blocked and an alarm given.

In case of large currents, unequal transient saturation of CT cores with different remanence or different saturation factor may result in differences in the secondary currents from the two CT sets. Unwanted blocking of protection functions during the transient stage must then be avoided.

Current circuit supervision CCSRDIF (87) must be sensitive and have short operate time in order to prevent unwanted tripping from fast-acting, sensitive numerical protections in case of faulty CT secondary circuits.

Open CT circuits creates extremely high voltages in the circuits which is extremely dangerous for the personell. It can also damage the insulation and cause new problems.
The application shall, thus, be done with this in consideration, especially if the protection functions are blocked.

3.11.1.2 Setting guidelines

Current circuit supervision CCSRDIF (87) compares the residual current from a three-phase set of current transformer cores with the neutral point current on a separate input taken from another set of cores on the same current transformer.

The minimum operate current, *IMinOp*, must be set as a minimum to twice the residual current in the supervised CT circuits under normal service conditions and rated primary current.

The parameter *Pickup_Block* is normally set at *150%* to block the function during transient conditions.

The FAIL output is connected to the blocking input of the protection function to be blocked at faulty CT secondary circuits.

3.11.1.3 Setting parameters

Table 146: CCSRDIF (87) Group settings (basic)

Name	Values (Range)	Unit	Step	Default	Description
Operation	Disabled Enabled	-	-	Disabled	Disable/Enable Operation
IBase	1 - 99999	A	1	3000	IBase value for current pickup detectors
IMinOp	5 - 200	%IB	1	20	Minimum operate current differential pickup in % of IBase

Table 147: CCSRDIF (87) Group settings (advanced)

Name	Values (Range)	Unit	Step	Default	Description
Pickup_Block	5 - 500	%IB	1	150	Block of the function at high phase current, in % of IBase

3.11.2 Fuse failure supervision SDDRFUF

Function description	IEC 61850 identification	IEC 60617 identification	ANSI/IEEE C37.2 device number
Fuse failure supervision	SDDRFUF	-	-

3.11.2.1 Application

Different protection functions within the protection IED, operates on the basis of the measured voltage in the relay point. Examples are:

- distance protection function
- undervoltage function
- energizing check function and voltage check for the weak infeed logic

These functions can operate unintentionally if a fault occurs in the secondary circuits between the voltage instrument transformers and the IED.

It is possible to use different measures to prevent such unwanted operations. Miniature circuit breakers in the voltage measuring circuits, located as close as possible to the voltage instrument transformers, are one of them. Separate fuse-failure monitoring IEDs or elements within the protection and monitoring devices are another possibilities. These solutions are combined to get the best possible effect in the fuse failure supervision function (SDDRFUF).

SDDRFUF function built into the IED products can operate on the basis of external binary signals from the miniature circuit breaker or from the line disconnector. The first case influences the operation of all voltage-dependent functions while the second one does not affect the impedance measuring functions.

The negative sequence detection algorithm, based on the negative-sequence measuring quantities, a high value of voltage $3V_2$ without the presence of the negative-sequence current $3I_2$, is recommended for use in isolated or high-impedance grounded networks.

The zero sequence detection algorithm, based on the zero sequence measuring quantities, a high value of voltage $3V_0$ without the presence of the residual current $3I_0$, is recommended for use in directly or low impedance grounded networks. In cases

where the line can have a weak-infeed of zero sequence current this function shall be avoided.

A criterion based on delta current and delta voltage measurements can be added to the fuse failure supervision function in order to detect a three phase fuse failure. This is beneficial for example during three phase transformer switching.

3.11.2.2 Setting guidelines

General

The negative and zero sequence voltages and currents always exist due to different non-symmetries in the primary system and differences in the current and voltage instrument transformers. The minimum value for the operation of the current and voltage measuring elements must always be set with a safety margin of 10 to 20%, depending on the system operating conditions.

Pay special attention to the dissymmetry of the measuring quantities when the function is used on longer untransposed lines, on multicircuit lines and so on.

The settings of negative sequence, zero sequence and delta algorithm are in percent of the base voltage and base current for the function, *VBase* and *IBase* respectively. Set *VBase* to the primary rated phase-phase voltage of the potential voltage transformer and *IBase* to the primary rated current of the current transformer.

Setting of common parameters

Set the operation mode selector *Operation* to *On* to release the fuse failure function.

The voltage threshold *VPPU* is used to identify low voltage condition in the system. Set *VPPU* below the minimum operating voltage that might occur during emergency conditions. We propose a setting of approximately 70% of *VBase*.

The drop off time of 200 ms for dead phase detection makes it recommended to always set *SealIn* to *Enabled* since this will secure a fuse failure indication at persistent fuse fail when closing the local breaker when the line is already energized from the other end. When the remote breaker closes the voltage will return except in the phase that has a persistent fuse fail. Since the local breaker is open there is no current and the dead phase indication will persist in the phase with the blown fuse. When the local breaker closes the current will start to flow and the function detects the fuse failure situation. But due to the 200 ms drop off timer the output BLKZ will not be activated until after 200 ms. This means that distance functions are not blocked and due to the “no voltage but current” situation might issue a trip.

The operation mode selector *OpModeSel* has been introduced for better adaptation to system requirements. The mode selector makes it possible to select interactions between the negative sequence and zero sequence algorithm. In normal applications the *OpModeSel* is set to either *UNsINs* for selecting negative sequence algorithm or

UZsIZs for zero sequence based algorithm. If system studies or field experiences shows that there is a risk that the fuse failure function will not be activated due to the system conditions, the dependability of the fuse failure function can be increased if the *OpModeSel* is set to *UZsIZs OR UNsINs* or *OptimZsNs*. In mode*UZsIZs OR UNsINs* both the negative and zero sequence based algorithm is activated and working in an OR-condition. Also in mode *OptimZsNs* both the negative and zero sequence algorithm are activated and the one that has the highest magnitude of measured negative or zero sequence current will operate. If there is a requirement to increase the security of the fuse failure function *OpModeSel* can be selected to *UZsIZs AND UNsINs* which gives that both negative and zero sequence algorithm is activated working in an AND-condition, that is, both algorithm must give condition for block in order to activate the output signals BLKU or BLKZ.

Negative sequence based

The relay setting value *3V2PU* is given in percentage of the base voltage *VBase* and should not be set lower than according to equation 411.

$$3V2PU = \frac{3V2}{VBase} \cdot 100$$

(Equation 411)

where:

3V2PU is the maximal negative sequence voltage during normal operation conditions, plus a margin of 10...20%

VBase is the setting of base voltage for the function

The setting of the current limit *3I2PU* is in percentage of parameter *IBase*. The setting of *3I2PU* must be higher than the normal unbalance current that might exist in the system and can be calculated according to equation 412.

$$3I2PU = \frac{3I2}{IBase} \cdot 100$$

(Equation 412)

where:

3I2 is the maximal negative sequence current during normal operating conditions, plus a margin of 10...20%

IBase is the setting of base current for the function

Zero sequence based

The IED setting value *3V0PU* is given in percentage of the base voltage *VBase*, where *VBase* is the primary base voltage, normally the rated voltage of the primary potential voltage transformer winding. The setting of *3V0PU* should not be set lower than according to equation 413.

$$3V0PU = \frac{3V0}{VBase} \cdot 100$$

(Equation 413)

where:

3V0	is the maximal zero sequence voltage during normal operation conditions, plus a margin of 10...20%
VBase	is the setting of base voltage for the function

The setting of the current limit *3I0>* is done in percentage of *IBase*. The setting of pickup must be higher than the normal unbalance current that might exist in the system. The setting can be calculated according to equation 414.

$$3I0PU = \frac{3I0}{IBase} \cdot 100$$

(Equation 414)

where:

3I0PU	is the maximal zero sequence current during normal operating conditions, plus a margin of 10...20%
IBase	is the setting of base current for the function

Delta V and delta I

Set the operation mode selector *OpDVDI* to *Enabled* if the delta function shall be in operation.

The setting of *DVPU* should be set high (approximately 60% of *VBase*) and the current threshold *DIPU* low (approximately 10% of *IBase*) to avoid unwanted operation due to normal switching conditions in the network. The delta current and delta voltage function shall always be used together with either the negative or zero sequence algorithm. If *VSetprim* is the primary voltage for operation of dU/dt and *ISetprim* the primary current for operation of dI/dt, the setting of *DVPU* and *DIPU* will be given according to equation 415 and equation 416.

$$DVPU = \frac{VSetprim}{VBase} \cdot 100$$

(Equation 415)

$$DIPU = \frac{ISetprim}{IBase} \cdot 100$$

(Equation 416)

The voltage thresholds *VPPU* is used to identify low voltage condition in the system. Set *VPPU* below the minimum operating voltage that might occur during emergency conditions. A setting of approximately 70% of *VBase* is recommended.

The current threshold *50P* shall be set lower than the *IMinOp* for the distance protection function. A 5...10% lower value is recommended.

Dead line detection

The condition for operation of the dead line detection is set by the parameters *IDLDPU* for the current threshold and *VDLDPU* for the voltage threshold.

Set the *IDLDPU* with a sufficient margin below the minimum expected load current. A safety margin of at least 15-20% is recommended. The operate value must however exceed the maximum charging current of an overhead line, when only one phase is disconnected (mutual coupling to the other phases).

Set the *VDLDPU* with a sufficient margin below the minimum expected operating voltage. A safety margin of at least 15% is recommended.

3.11.2.3 Setting parameters

Table 148: SDDRFUF Group settings (basic)

Name	Values (Range)	Unit	Step	Default	Description
Operation	Disabled Enabled	-	-	Enabled	Disable/Enable Operation
IBase	1 - 99999	A	1	3000	Base current
VBase	0.05 - 2000.00	kV	0.05	400.00	Base voltage
OpModeSel	Disabled V2I2 V0I0 V0I0 OR V2I2 V0I0 AND V2I2 OptimZsNs	-	-	V0I0	Operating mode selection
3V0PU	1 - 100	%VB	1	30	Pickup of residual overvoltage element in % of VBase

Table continues on next page

Name	Values (Range)	Unit	Step	Default	Description
3I0PU	1 - 100	%IB	1	10	Pickup of residual undercurrent element in % of IBase
3V2PU	1 - 100	%VB	1	30	Pickup of negative sequence overvoltage element in % of VBase
3I2PU	1 - 100	%IB	1	10	Pickup of negative sequence undercurrent element in % of IBase
OpDVDI	Disabled Enabled	-	-	Disabled	Operation of change based function Disable/ Enable
DVPU	1 - 100	%VB	1	60	Pickup of change in phase voltage in % of VBase
DIPU	1 - 100	%IB	1	15	Pickup of change in phase current in % of IBase
VPPU	1 - 100	%VB	1	70	Pickup of phase voltage in % of VBase
IPPU	1 - 100	%IB	1	10	Pickup of phase current in % of IBase
SealIn	Disabled Enabled	-	-	Enabled	Seal in functionality Disable/Enable
VSealInPU	1 - 100	%VB	1	70	Pickup of seal-in phase voltage in % of VBase
IDLDPU	1 - 100	%IB	1	5	Pickup for phase current detection in % of IBase for dead line detection
VDLDPU	1 - 100	%VB	1	60	Pickup for phase voltage detection in % of VBase for dead line detection

3.12 Control

3.12.1 Synchronism check, energizing check, and synchronizing SESRSYN (25)

Function description	IEC 61850 identification	IEC 60617 identification	ANSI/IEEE C37.2 device number
Synchrocheck, energizing check, and synchronizing	SESRSYN	*sc/vc*	25

3.12.1.1 Application

Synchronizing

To allow closing of breakers between asynchronous networks a synchronizing function is provided. The breaker close command is issued at the optimum time when conditions across the breaker are satisfied in order to avoid stress on the network and its components.

The systems are defined to be asynchronous when the frequency difference between bus and line is larger than an adjustable parameter. If the frequency difference is less than this threshold value the system is defined to have a parallel circuit and the synchronism check function is used.

The synchronizing function measures the difference between the V-Line and the V-Bus. It operates and enables a closing command to the circuit breaker when the calculated closing angle is equal to the measured phase angle and the following conditions are simultaneously fulfilled:

- The voltages U-Line and U-Bus are higher than the set values for *VHighBusSynch* and *VHighLineSynch* of the base voltages *VBaseBus* and *VBaseLine*.
- The difference in the voltage is smaller than the set value of *VDiffSynch*.
- The difference in frequency is less than the set value of *FreqDiffMax* and larger than the set value of *FreqDiffMin*. If the frequency is less than *FreqDiffMin* the synchronism check is used and the value of *FreqDiffMin* must thus be identical to the value *FreqDiffM* resp *FreqDiffA* for synchronism check function. The bus and line frequencies must also be within a range of +/- 5 Hz from the rated frequency. When the synchronizing option is included also for autoreclose there is no reason to have different frequency setting for the manual and automatic reclosing and the frequency difference values for synchronism check should be kept low.
- The frequency rate of change is less than set value for both V-Bus and V-Line.
- The closing angle is decided by the calculation of slip frequency and required pre-closing time.

The synchronizing function compensates for measured slip frequency as well as the circuit breaker closing delay. The phase angle advance is calculated continuously. Closing angle is the change in angle during the set breaker closing operate time *tBreaker*.

The reference voltage can be phase-neutral A, B, C or phase-phase A-B, B-C, C-A or positive sequence. The bus voltage must then be connected to the same phase or phases as are chosen for the line. If different phases voltages are used for the reference voltage, the phase shift has to be compensated with the parameter *PhaseShift*, and the voltage amplitude has to be compensated by the factor *URatio*. Positive sequence selection setting requires that both reference voltages are three phase voltages.

Synchronism check

The main purpose of the synchronism check function is to provide control over the closing of circuit breakers in power networks in order to prevent closing if conditions for synchronism are not detected. It is also used to prevent the re-connection of two systems, which are divided after islanding and after a three pole reclosing.

Single pole auto-reclosing does not require any synchronism check since the system is tied together by two phases.

SESRSYN (25) function block includes both the synchronism check function and the energizing function to allow closing when one side of the breaker is dead. SESRSYN (25) function also includes a built in voltage selection scheme which allows simple application in busbar arrangements.

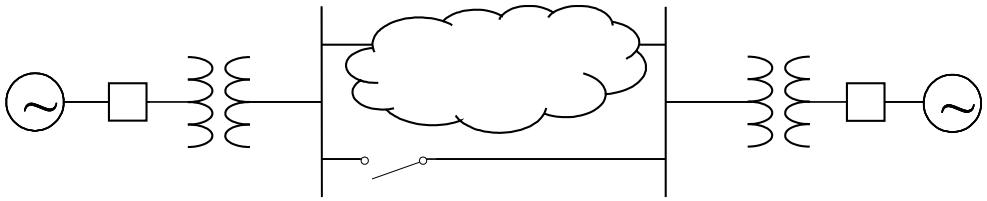

Figure 229: Two interconnected power systems

Figure 229 shows two interconnected power systems. The cloud means that the interconnection can be further away, that is, a weak connection through other stations. The need for a check of synchronization increases as the meshed system decreases since the risk of the two networks being out of synchronization at manual or automatic closing is greater.

The synchronism check function measures the conditions across the circuit breaker and compares them to set limits. Output is generated only when all measured conditions are within their set limits simultaneously. The check consists of:

- Live line and live bus.
- Voltage level difference.
- Frequency difference (slip). The bus and line frequency must also be within a range of ±5 Hz from rated frequency.
- Phase angle difference.

A time delay is available to ensure that the conditions are fulfilled for a minimum period of time.

In very stable power systems the frequency difference is insignificant or zero for manually initiated closing or closing by automatic restoration. In steady conditions a

bigger phase angle difference can be allowed as this is sometimes the case in a long and loaded parallel power line. For this application we accept a synchronism check with a long operation time and high sensitivity regarding the frequency difference. The phase angle difference setting can be set for steady state conditions.

Another example, is when the operation of the power net is disturbed and high-speed auto-reclosing after fault clearance takes place. This can cause a power swing in the net and the phase angle difference may begin to oscillate. Generally, the frequency difference is the time derivative of the phase angle difference and will, typically oscillate between positive and negative values. When the circuit breaker needs to be closed by auto-reclosing after fault-clearance some frequency difference should be tolerated, to a greater extent than in the steady condition mentioned in the case above. But if a big phase angle difference is allowed at the same time, there is some risk that auto-reclosing will take place when the phase angle difference is big and increasing. In this case it should be safer to close when the phase angle difference is smaller.

To fulfill the above requirements the synchronism check function is provided with duplicate settings, one for steady (Manual) conditions and one for operation under disturbed conditions (Auto).

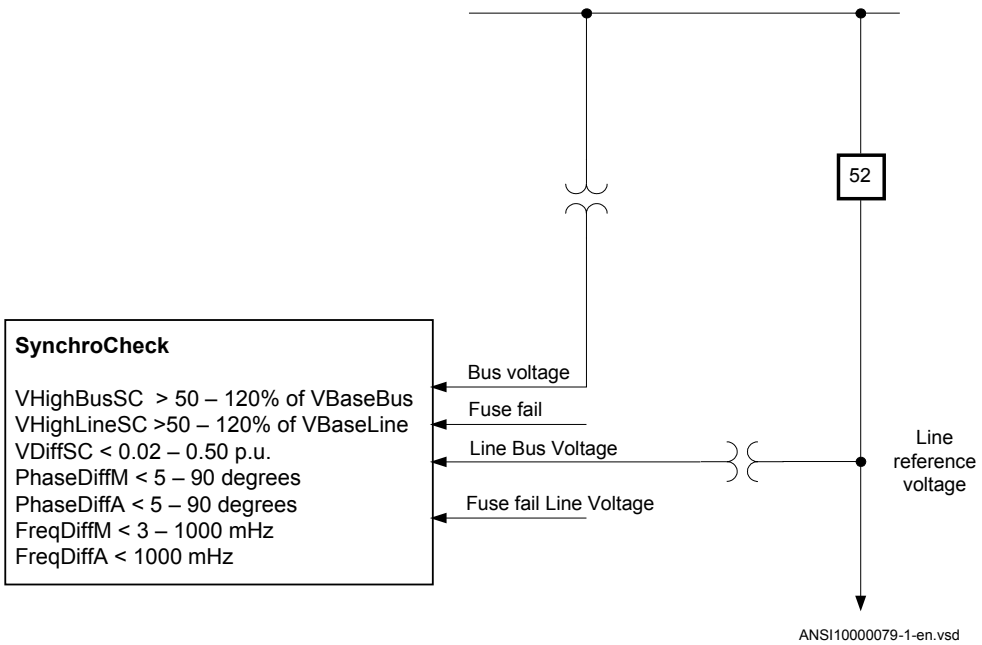

Figure 230: Principle for the synchronism check function

Energizing check

The main purpose of the energizing check function is to facilitate the controlled re-connection of disconnected lines and buses to energized lines and buses.

The energizing check function measures the bus and line voltages and compares them to both high and low threshold values. The output is given only when the actual measured conditions match the set conditions. Figure 231 shows two substations, where one (1) is energized and the other (2) is not energized. Power system 2 is energized (DLLB) from substation 1 via the circuit breaker A.

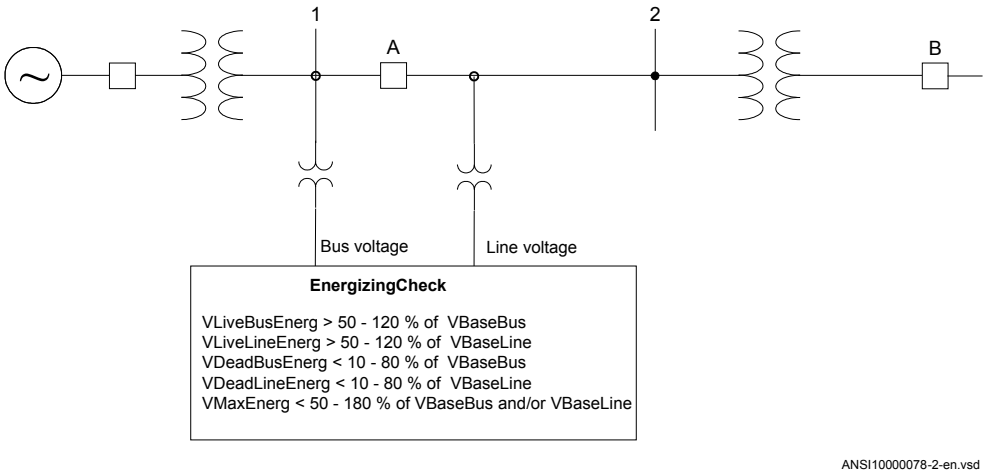

Figure 231: Principle for the energizing check function

The energizing operation can operate in the dead line live bus (DLLB) direction, dead bus live line (DBLL) direction, or in both directions over the circuit breaker. Energizing from different directions can be different for automatic reclosing and manual closing of the circuit breaker. For manual closing it is also possible to allow closing when both sides of the breaker are dead, Dead Bus Dead Line (DBDL).

The equipment is considered energized if the voltage is above set value of *VHighBusEnerg* or *VHighLineEnerg* of the base voltage, and non-energized if it is below set value of *VLowBusEnerg* or *VLowLineEnerg* of the base voltage. A disconnected line can have a considerable potential because of factors such as induction from a line running in parallel, or feeding via extinguishing capacitors in the circuit breakers. This voltage can be as high as 50% or more of the base voltage of the line. Normally, for breakers with single breaking elements (<330 kV) the level is well below 30%.

When the energizing direction corresponds to the settings, the situation has to remain constant for a certain period of time before the close signal is permitted. The purpose of the delayed operate time is to ensure that the dead side remains de-energized and that the condition is not due to temporary interference.

Voltage selection

The voltage selection function is used for the connection of appropriate voltages to the synchronism check and energizing check functions. For example, when the IED is used in a double bus arrangement, the voltage that should be selected depends on the status of the breakers and/or disconnectors. By checking the status of the disconnectors auxiliary contacts, the right voltages for the synchronism check and energizing check functions can be selected.

Available voltage selection types are for single circuit breaker with double busbars and the breaker-and-a-half arrangement. A double circuit breaker arrangement and single circuit breaker with a single busbar do not need any voltage selection function. Neither does a single circuit breaker with double busbars using external voltage selection need any internal voltage selection.

The voltages from busbars and lines must be physically connected to the voltage inputs in the IED and connected, using the control software, to each of the maximum two SESRSYN (25) functions available in the IED.

External fuse failure

External fuse-failure signals or signals from a tripped fuse switch/MCB are connected to binary inputs that are configured to inputs of SESRSYN (25) function in the IED. The internal fuse failure supervision function can also be used, for at least the line voltage supply. The signal BLKU, from the internal fuse failure supervision function, is then used and connected to the blocking input of the energizing check function block. In case of a fuse failure, the SESRSYN (25) function is blocked.

The VB1OK/VB2OK and VB1FF/VB2FF inputs are related to the busbar voltage and the VL1OK/VL2OK and VL1FF/VL2FF inputs are related to the line voltage.

External selection of energizing direction

The energizing can be selected by use of the available logic function blocks. Below is an example where the choice of mode is done from a symbol on the local HMI through selector switch function block, but alternatively there can for example, be a physical selector switch on the front of the panel which is connected to a binary to integer function block (B16I).

If the PSTO input is used, connected to the Local-Remote switch on the local HMI, the choice can also be from the station HMI system, typically ABB Microscada through IEC 61850–8–1 communication.

The connection example for selection of the manual energizing mode is shown in figure 232. Selected names are just examples but note that the symbol on the local HMI can only show three signs.

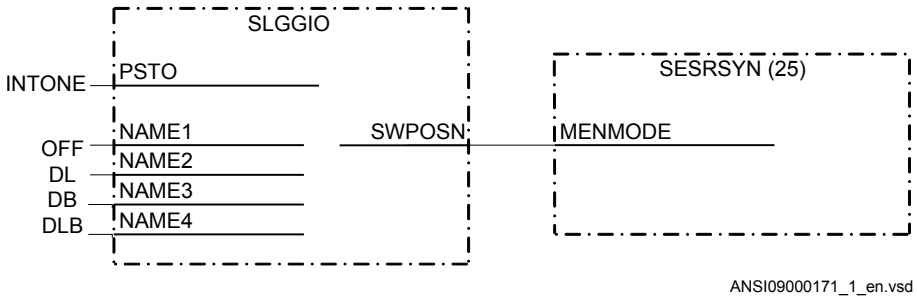

Figure 232: Selection of the energizing direction from a local HMI symbol through a selector switch function block.

3.12.1.2 Application examples

The synchronism check function block can also be used in some switchyard arrangements, but with different parameter settings. Below are some examples of how different arrangements are connected to the IED analog inputs and to the function block SESRSYN, 25. One function block is used per circuit breaker.

The input used below in example are typical and can be changed by use of configuration and signal matrix tools.

The SESRSYN and connected SMAI function block instances must have the same cycle time in the application configuration.

Single circuit breaker with single busbar

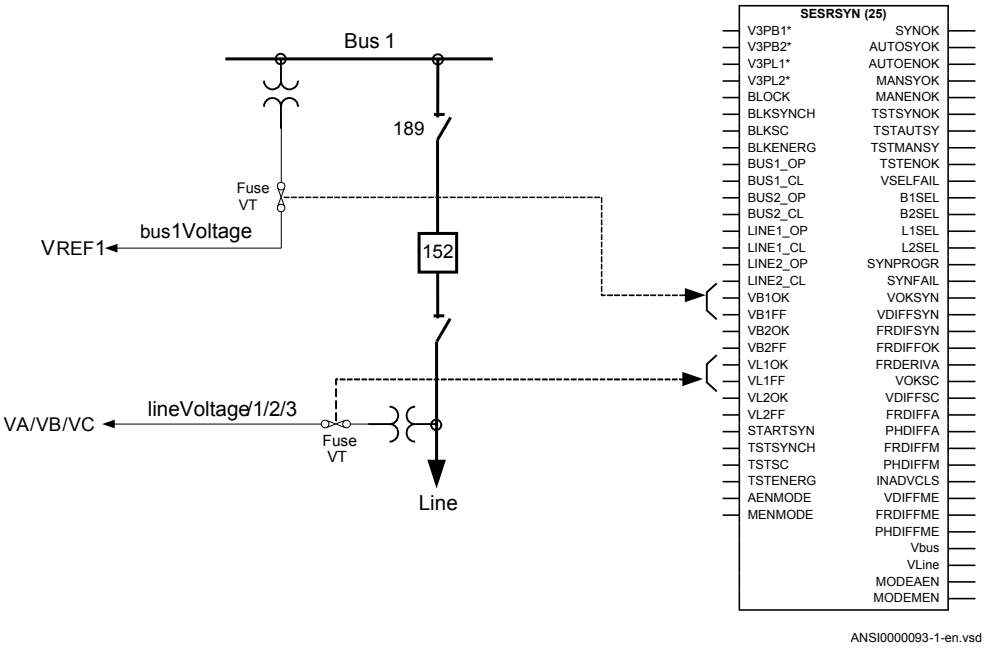

Figure 233: Connection of SESRSYN (25) function block in a single busbar arrangement

Figure 233 illustrates connection principles. For the SESRSYN (25) function there is one voltage transformer on each side of the circuit breaker. The voltage transformer circuit connections are straightforward; no special voltage selection is necessary.

The voltage from busbar VT is connected to V3PBB1 and the voltage from the line VT is connected to V3PLN1. The positions of the VT fuses shall also be connected as shown above. The voltage selection parameter *CBConfig* is set to *No voltage sel*.

Single circuit breaker with double busbar, external voltage selection

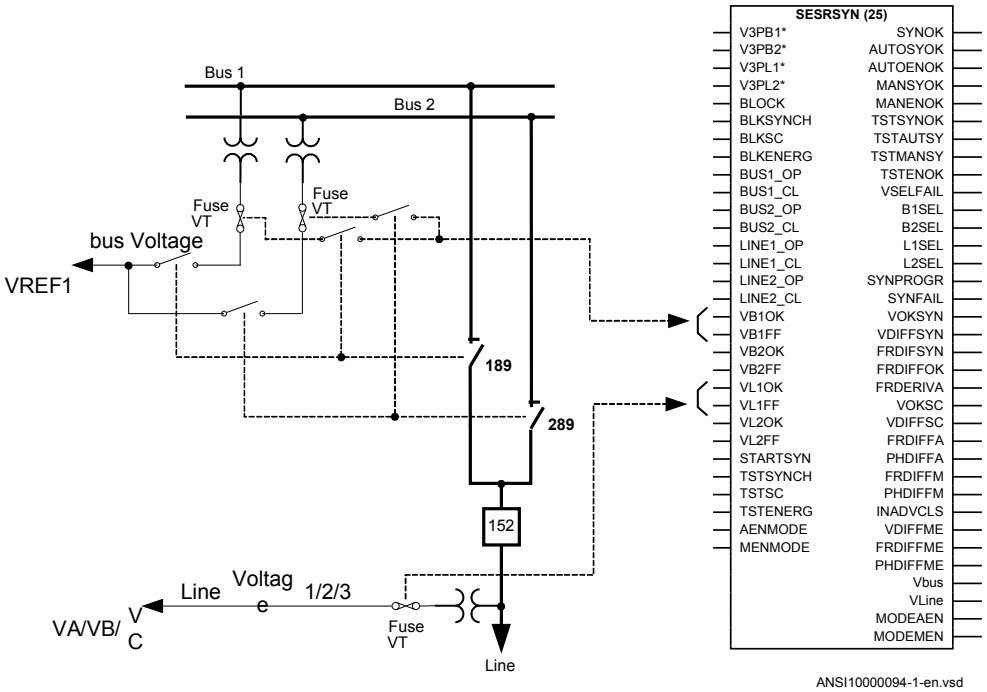

Figure 234: Connection of SESRSYN (25) function block in a single breaker, double busbar arrangement with external voltage selection

In this type of arrangement no internal voltage selection is required. The voltage selection is made by external relays typically connected according to figure 234. Suitable voltage and VT fuse failure supervision from the two busbars are selected based on the position of the busbar disconnectors. This means that the connections to the function block will be the same as for the single busbar arrangement. The voltage selection parameter *CBConfig* is set to *No voltage sel*.

Single circuit breaker with double busbar, internal voltage selection

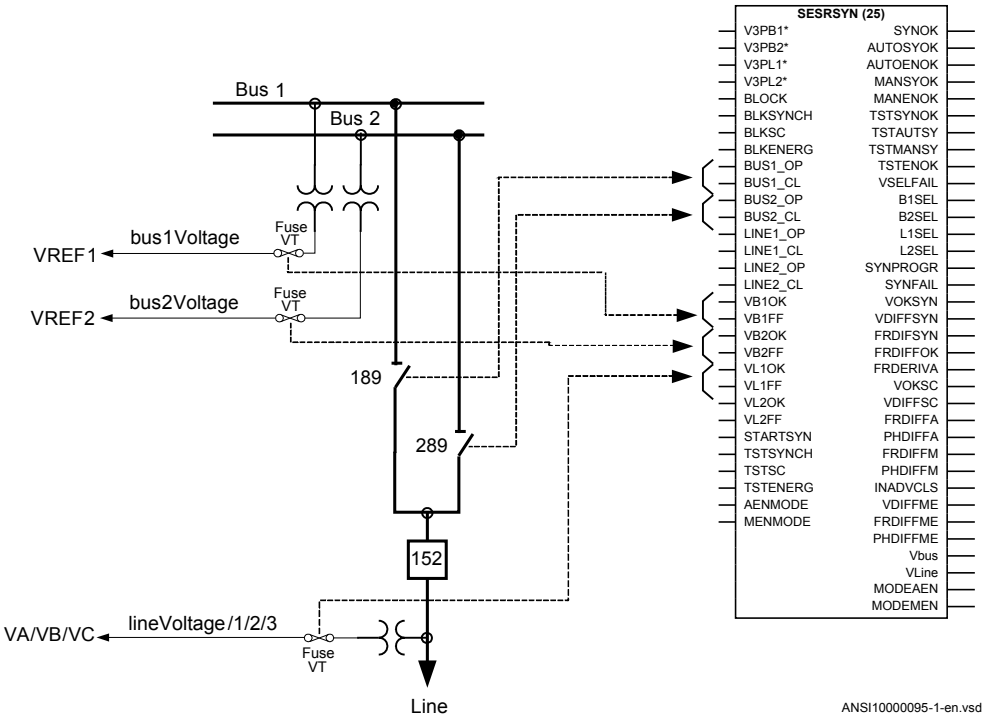

Figure 235: Connection of the SESRSYN function block in a single breaker, double busbar arrangement with internal voltage selection

When internal voltage selection is needed, the voltage transformer circuit connections are made according to figure 235. The voltage from the busbar 1 VT is connected to *U3PBB1* and the voltage from busbar 2 is connected to V3PBB2. The voltage from the line VT is connected to V3PLN1. The positions of the disconnectors and VT fuses shall be connected as shown in figure 235. The voltage selection parameter *CBConfig* is set to *Double bus*.

Double circuit breaker

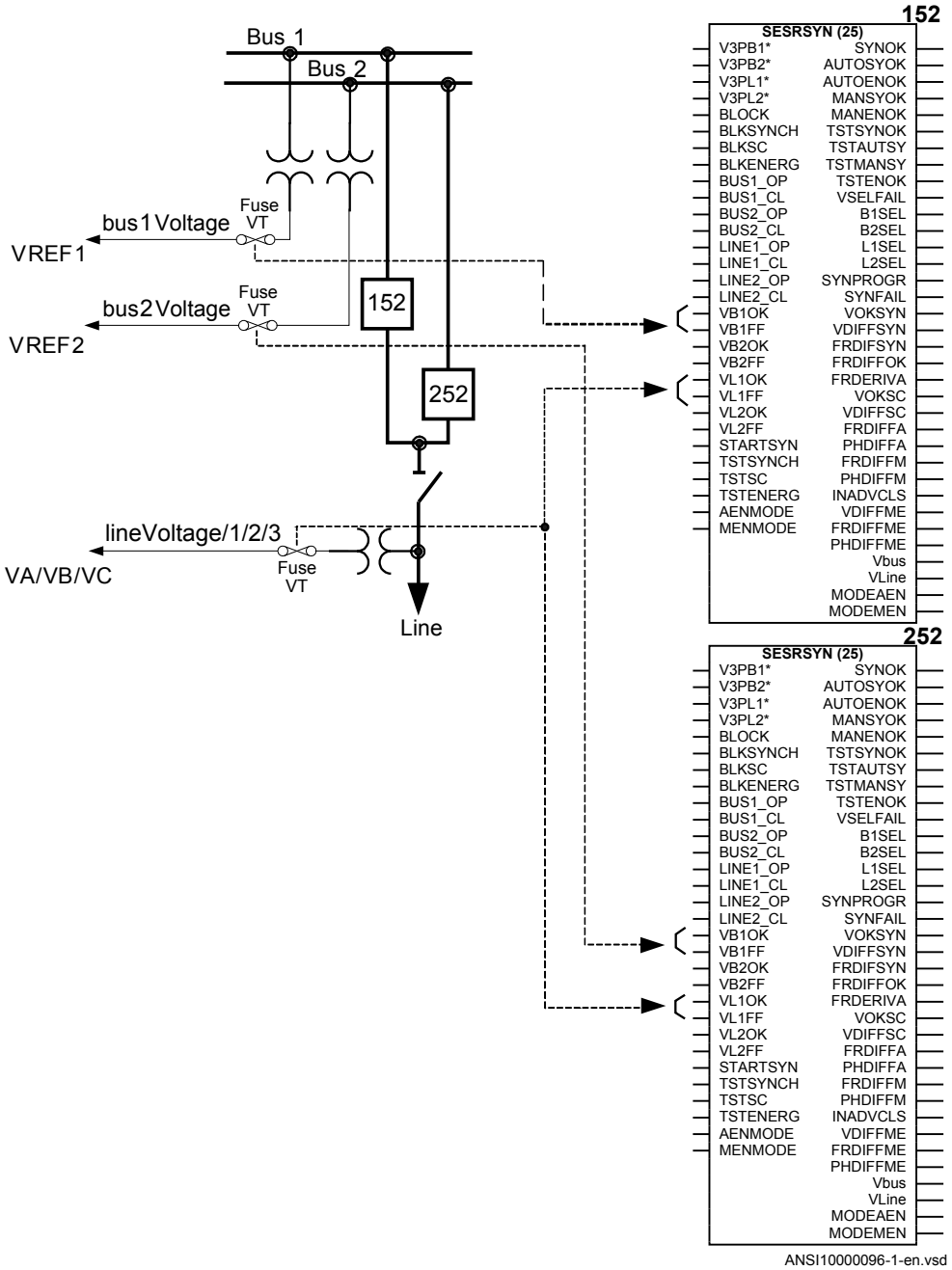

Figure 236: Connections of the SESRSYN (25) function block in a double breaker arrangement

A double breaker arrangement requires two function blocks, SESRSYN1 for breaker QA1 and SESRSYN2 for breaker QA2. No voltage selection is necessary, because the voltage from busbar 1 VT is connected to V3PBB1 on SESRSYN1 and the voltage from busbar 2 VT is connected toV3PBB1 on SESRSYN2. The voltage from the line VT is connected to V3PLN1 on both SESRSYN1 and SESRSYN2. The condition of VT fuses shall also be connected as shown in figure 235. The voltage selection parameter *CBConfig* is set to *No voltage sel.* for both SESRSYN1 and SESRSYN2.

Breaker-and-a-half

The line one IED in a breaker-and-a-half arrangement handles voltage selection for busbar 1 CB and for the tie CB.The IED requires two function blocks, SESRSYN1 for busbar 1 CB and SESRSYN2 for tie CB. The voltage from busbar 1 VT is connected to V3PBB1 on both function blocks and the voltage from busbar 2 VT is connected to V3PBB2 on both function blocks. The voltage from line1 VT is connected to V3PLN1 on both function blocks and the voltage from line2 VT is connected to V3PLN2 on both function blocks. The positions of the disconnectors and VT fuses shall be connected as shown in figure 237.

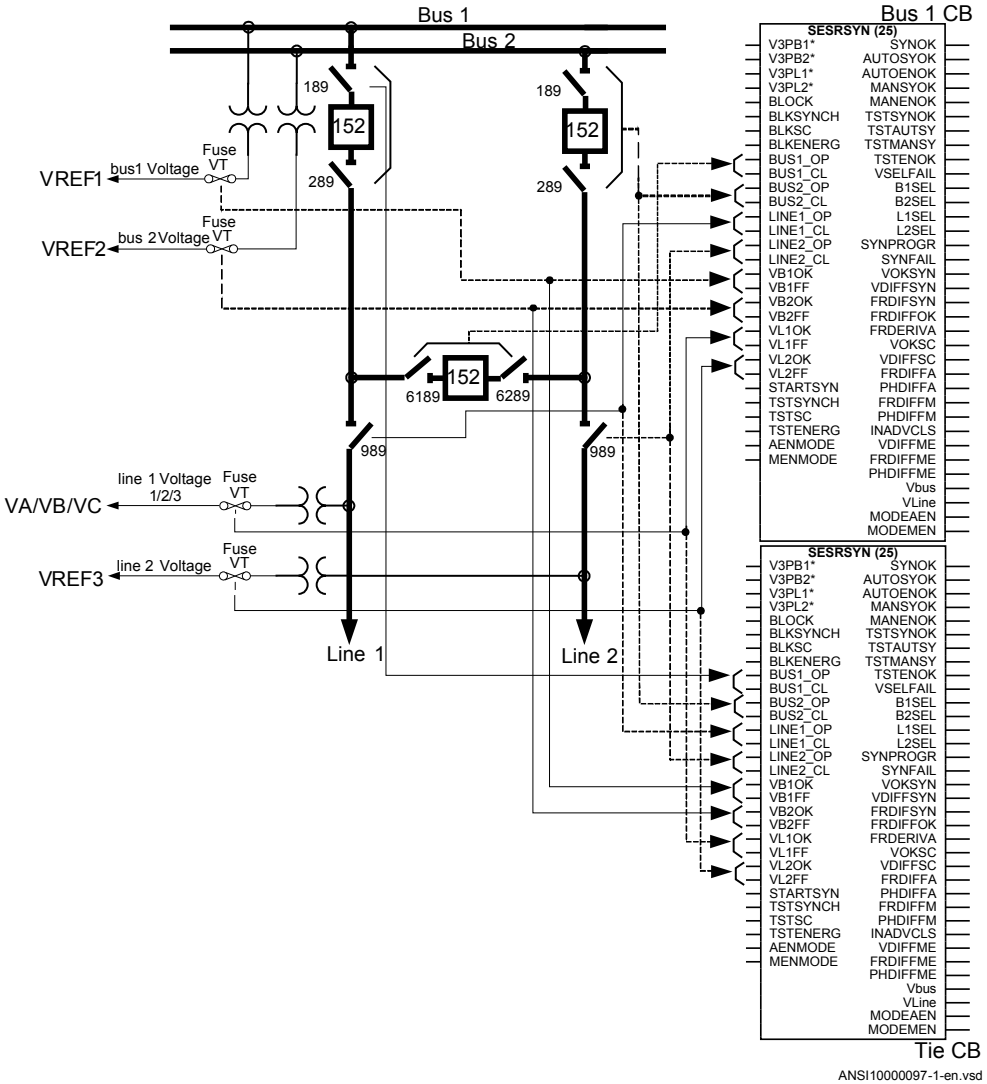

Figure 237: Connections of the SESRSYN (25) function block in a breaker-and-a-half arrangement with internal voltage selection for the line 1 IED

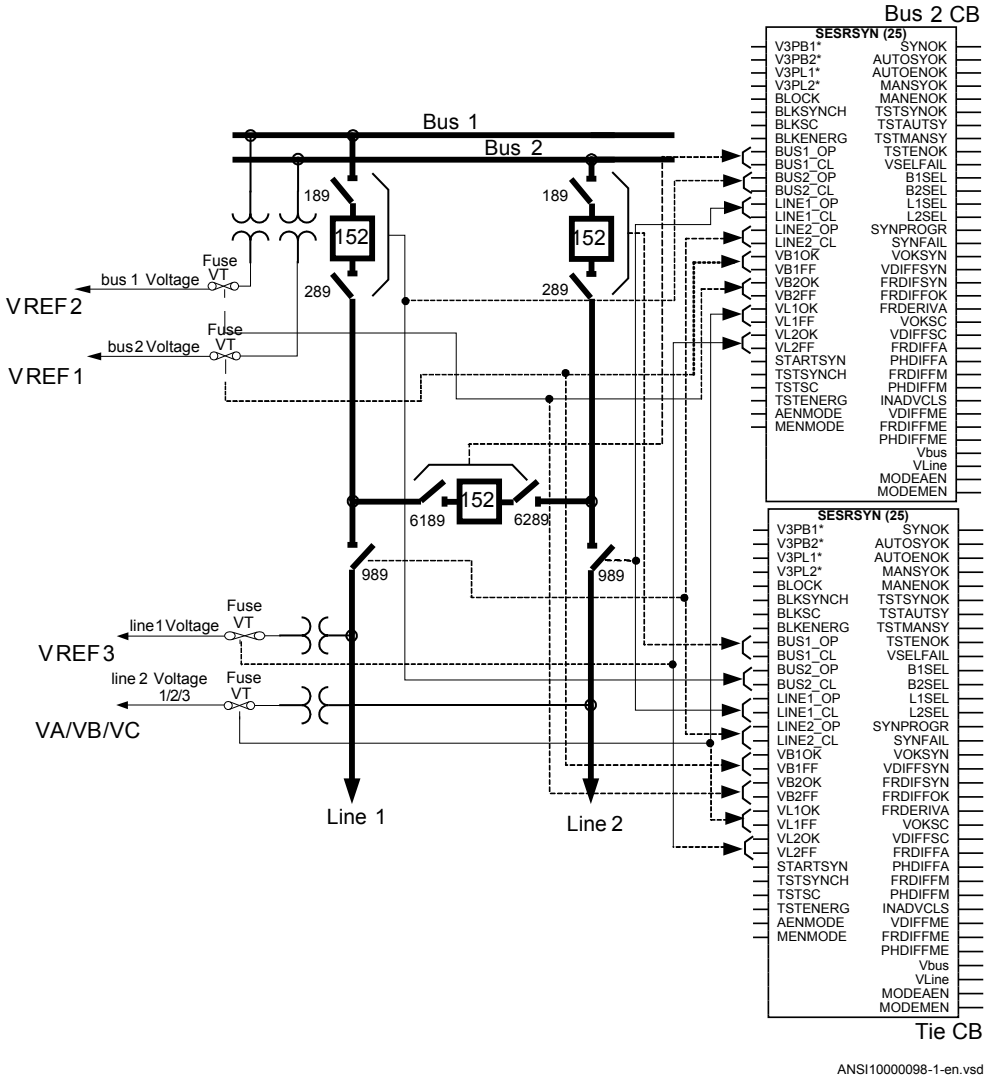

Figure 238: Connections of the SESRSYN (25) function block in a breaker-and-a-half arrangement with internal voltage selection for the line 2 IED

The example shows the use of the SESRSYN function for the Tie Circuit breaker in both Line IEDs. This depends on the arrangement of Auto-reclose and manual closing and might often not be required.

The connections are similar in both IEDs, apart from the live voltages and bus voltages, which are crossed. The line two IED in a breaker-and-a-half arrangement handles voltage selection for busbar2 CB and for the tie CB. The IED requires two

function blocks, SESRSYN1 for busbar2 CB and SESRSYN2 for the tie CB. The voltage from busbar1 VT is connected to V3PB2 on both function blocks and the voltage from busbar2 VT is connected to V3PB1 on both function blocks. The voltage from line1 VT is connected to V3PL2 on both function blocks and the voltage from line2 VT is connected to V3PL1 on both function blocks. Also, crossed positions of the disconnectors and VT fuses shall be connected as shown in figure 238. The physical analog connections of voltages and the connection to the IED and SESRSYN (25) function blocks must be carefully checked in PCM600. In both IEDs the connections and configurations must abide by the following rules: Normally apparatus position is connected with contacts showing both open (b-type) and closed positions (a-type).

Bus CB:

- BUS1_OP/CL = Position of the tie CB and disconnectors
- BUS2_OP/CL = Position of opposite bus CB and disconnectors
- LINE1_OP/CL = Position of own line disconnector
- LINE2_OP/CL = Position of opposite line disconnector
- VB1OK/FF = Supervision of bus VT fuse connected to own bus CB
- VB2OK/FF = Supervision of bus VT fuse connected to opposite bus CB
- VL1OK/FF = Supervision of line VT fuse connected to own line
- VL2OK/FF = Supervision of line VT fuse connected to opposite line
- Setting *CBConfig = 1 1/2 Bus CB*

Tie CB:

- BUS1_OP/CL = Position of own bus CB and disconnectors
- BUS2_OP/CL = Position of opposite bus CB and disconnectors
- LINE1_OP/CL = Position of own line disconnector
- LINE2_OP/CL = Position of opposite line disconnector
- VB1OK/FF = Supervision of bus VT fuse connected to own bus CB
- VB2OK/FF = Supervision of bus VT fuse connected to opposite bus CB
- VL1OK/FF = Supervision of line VT fuse connected to own line
- VL2OK/FF = Supervision of line VT fuse connected to opposite line
- Setting *CBConfig = Tie CB*

If three SESRSYN (25) functions are provided in the same IED, or if preferred for other reason, the system can be set-up without “mirroring” by setting *CBConfig* to *1½ bus alt. CB* on the SESRSYN (25) function for the second busbar CB. Above standard is used because normally two SESRSYN (25) functions with the same configuration and settings are provided in a station for each bay.

3.12.1.3 Setting guidelines

The setting parameters for the Synchronizing, synchronism check and energizing check function SESRSYN (25) are set via the local HMI (LHMI) or PCM600.

This setting guidelines describes the settings of the SESRSYN (25) function via the LHMI.

The SESRSYN function has the following four configuration parameters, which on the LHMI are found under **Settings/General Settings/Control/Synchronizing(RSYN,25)/SESRSYN:X**.

SelPhaseBus1 and *SelPhaseBus2*

Configuration parameters for selecting the measuring phase of the voltage for busbar 1 and 2 respectively, which can be a single-phase (phase-neutral), two-phase (phase-phase) or a positive sequence voltage.

SelPhaseLine1 and *SelPhaseLine2*

Configuration parameters for selecting the measuring phase of the voltage for line 1 and 2 respectively, which can be a single-phase (phase-neutral), two-phase (phase-phase) or a positive sequence voltage.

The same voltages must be used for both Bus and Line or, alternatively, a compensation of angle difference can be set. See setting *PhaseShift* below under General Settings.

The SESRSYN function has one setting for the bus reference voltage (*UBaseBus*) and one setting for the line reference voltage (*UBaseLine*), which can be set as a reference of base values independently of each other. This means that the reference voltage of bus and line can be set to different values, which is necessary, for example, when synchronizing via a transformer.

The settings for the SESRSYN function are found under **Settings/Setting group N/Control/Synchronizing(RSYN,25)/SESRSYN:X** on the LHMI and are divided into four different groups: **General**, **Synchronizing**, **Synchrocheck** and **Energizingcheck**.

General settings

Operation: The operation mode can be set *Enabled* or *Disabled* from PST. The setting *Disabled* disables the whole SESRSYN function.

CBConfig

This configuration setting is used to define type of voltage selection. Type of voltage selection can be selected as:

- no voltage selection
- single circuit breaker with double bus
- breaker-and-a-half arrangement with the breaker connected to busbar 1
- breaker-and-a-half arrangement with the breaker connected to busbar 2
- breaker-and-a-half arrangement with the breaker connected to line 1 and 2 (tie breaker)

VBaseBus and *VBaseLine*

These are the configuration settings for the base voltages.

VRatio

The *VRatio* is defined as *VRatio = bus voltage*/*line voltage*. This setting scales up the line voltage to an equal level with the bus voltage.

PhaseShift

This setting is used to compensate the phase shift between the measured bus voltage and line voltage when:

- a. different phase-neutral voltages are selected (for example UL1 for bus and UL2 for line);
- b. one available voltage is phase-phase and the other one is phase-neutral (for example UL1L2 for bus and UL1 for line).

The set value is added to the measured line phase angle. The bus voltage is reference voltage.

Synchronizing settings

OperationSynch

The setting *Off* disables the Synchronizing function. With the setting *On*, the function is in the service mode and the output signal depends on the input conditions.

VHighBusSynch and *VHighLineSynch*

The voltage level settings shall be chosen in relation to the bus/line network voltage. The threshold voltages *VHighBusSynch* and *VHighLineSynch* have to be set smaller than the value where the network is expected to be synchronized. A typical value is 80% of the rated voltage.

VDiffSynch

Setting of the voltage difference between the line voltage and the bus voltage. The difference is set depending on the network configuration and expected voltages in the two networks running asynchronously. A normal setting is 0.10-0.15 p.u.

FreqDiffMin

The setting *FreqDiffMin* is the minimum frequency difference where the systems are defined to be asynchronous. For frequency differences lower than this value, the systems are considered to be in parallel. A typical value for *FreqDiffMin* is 10 mHz. Generally, the value should be low if both synchronizing and synchrocheck functions are provided, and it is better to let the synchronizing function close, as it will close at exactly the right instance if the networks run with a frequency difference.

FreqDiffMin must be set to the same value as *FreqDiffM*, respective *FreqDiffA* for SESRSYN depending on whether the functions are used for manual operation, autoreclosing, or both.

FreqDiffMax

The setting *FreqDiffMax* is the maximum slip frequency at which synchronizing is accepted. 1/*FreqDiffMax* shows the time for the vector to move 360 degrees, one turn on the synchronoscope, and is called Beat time. A typical value for *FreqDiffMax* is 200-250 mHz, which gives beat times on 4-5 seconds. Higher values should be avoided as the two networks normally are regulated to nominal frequency independent of each other, so the frequency difference shall be small.

FreqRateChange

The maximum allowed rate of change for the frequency.

tBreaker

The setting *tBreaker* shall be set to match the closing time for the circuit breaker and must also include the possible auxiliary relays in the closing circuit. A typical setting is 80-150 ms, depending on the breaker closing time.

It is important to check that no slow logic components are used in the configuration of the IED, as this may cause variations in the closing time.

tClosePulse

The setting for the duration of the breaker close pulse.

tMaxSynch

The setting *tMaxSynch* is set to reset the operation of the synchronizing function if the operation does not take place within this time. The setting must allow for the setting of *FreqDiffMin*, which will decide how long it will take maximum to reach phase equality. At the setting of 10 ms, the beat time is 100 seconds and the setting would thus need to be at least *tMinSynch* plus 100 seconds. If the network frequencies are expected to be outside the limits from the start, a margin needs to be added. A typical setting is 600 seconds.

tMinSynch

The setting *tMinSynch* is set to limit the minimum time at which the synchronizing closing attempt is given. The synchronizing function will not give a closing command within this time, from when the synchronizing is started, even if a synchronizing condition is fulfilled. A typical setting is 200 ms.

Synchrocheck settings

OperationSC

The *OperationSC* setting *Off* disables the synchrocheck function and sets the outputs AUTOSYOK, MANSYOK, TSTAUTSY and TSTMANSY to low. With the setting *On*, the function is in the service mode and the output signal depends on the input conditions.

VHighBusSC and *VHighLineSC*

The voltage level settings must be chosen in relation to the bus or line network voltage. The threshold voltages *VHighBusSC* and *VHighLineSC* have to be set lower than the value at which the breaker is expected to close with the synchronism check. A typical value can be 80% of the base voltages.

UDiffSC

The setting for voltage difference between line and bus in p.u, defined as (U-Bus/UBaseBus) - (U-Line/UBaseLine).

FreqDiffM and FreqDiffA

The frequency difference level settings, *FreqDiffM* and *FreqDiffA*, are chosen depending on network conditions. At steady conditions, a low frequency difference setting is needed, where the *FreqDiffM* setting is used. For autoreclosing, a bigger frequency difference setting is preferable, where the *FreqDiffA* setting is used. A typical value for *FreqDiffM* can be10 mHz, and a typical value for *FreqDiffA* can be 100-200 mHz.

PhaseDiffM and PhaseDiffA

The phase angle difference level settings, *PhaseDiffM* and *PhaseDiffA*, are also chosen depending on conditions in the network. The phase angle setting must be chosen to allow closing under maximum load. A typical maximum value in heavy-loaded networks can be 45 degrees, whereas in most networks the maximum occurring angle is below 25 degrees. The *PhaseDiffM* setting will be a limitation also for *PhaseDiffA* as it is expected that, due to the fluctuations, which can occur at high speed autoreclosing, the *PhaseDiffA* is limited in setting.

tSCM and tSCA

The purpose of the timer delay settings, *tSCM* and*tSCA*, is to ensure that the synchrocheck conditions remain constant and that the situation is not due to a temporary interference. If the conditions do not persist for the specified time, the delay timer is reset and the procedure is restarted when the conditions are fulfilled again. Circuit breaker closing is thus not permitted until the synchrocheck situation has remained constant throughout the set delay setting time. Under stable conditions, a longer operation time delay setting is needed, where the *tSCM* setting is used. During auto-reclosing, a shorter operation time delay setting is preferable, where the *tSCA* setting is used. A typical value for *tSCM* can be 1 second and a typical value for *tSCA* can be 0.1 seconds.

Energizingcheck settings

AutoEnerg and *ManEnerg*

Two different settings can be used for automatic and manual closing of the circuit breaker. The settings for each of them are:

- *Disabled*, the energizing function is disabled.
- *DLLB*, Dead Line Live Bus, the line voltage is below set value of *VDeadLineEnerg* and the bus voltage is above set value of *VLIveBusEnerg*.
- *DBLL*, Dead Bus Live Line, the bus voltage is below set value of *VDeadBusEnerg* and the line voltage is above set value of *VLiveLineEnerg*.
- *Both*, energizing can be done in both directions, *DLLB* or *DBLL*.

ManEnergDBDL

If the parameter is set to *Enabled*, manual closing is enabled when both line voltage and bus voltage are below *VDeadLineEnerg* and *VDeadBusEnerg* respectively, and *ManEnerg* is set to *DLLB*, *DBLL* or *Both*.

VLiveBusEnerg and *VLiveLineEnerg*

The voltage level settings must be chosen in relation to the bus or line network voltage. The threshold voltages *VLiveBusEnerg* and *VLiveLineEnerg* have to be set lower than the value at which the network is considered to be energized. A typical value can be 80% of the base voltages.

VDeadBusEnerg and *VDeadLineEnerg*

The threshold voltages *VDeadBusEnerg* and *VDeadLineEnerg*, have to be set to a value greater than the value where the network is considered not to be energized. A typical value can be 40% of the base voltages.

A disconnected line can have a considerable potential due to, for instance, induction from a line running in parallel, or by being fed via the extinguishing capacitors in the circuit breakers. This voltage can be as high as 30% or more of the base line voltage.

Because the setting ranges of the threshold voltages *VLiveBusEnerg*/*VLiveLineEnerg* and *VDeadBusEnerg*/*VDeadLineEnerg* partly overlap each other, the setting conditions may be such that the setting of the non-energized threshold value is higher than that of the energized threshold value. The parameters must therefore be set carefully to avoid the setting conditions mentioned above.

VMaxEnerg

This setting is used to block the closing when the voltage on the live side is above the set value of *VMaxEnerg*.

tAutoEnerg and *tManEnerg*

The purpose of the timer delay settings, *tAutoEnerg* and *tManEnerg*, is to ensure that the dead side remains de-energized and that the condition is not due to a temporary interference. If the conditions do not persist for the specified time, the delay timer is reset and the procedure is restarted when the conditions are fulfilled again. Circuit breaker closing is thus not permitted until the energizing condition has remained constant throughout the set delay setting time.

3.12.1.4 Setting parameters

Table 149: SESRSYN (25) Group settings (basic)

Name	Values (Range)	Unit	Step	Default	Description
Operation	Disabled Enabled	-	-	Disabled	Disable/Enable Operation
CBConfig	No voltage sel. Double bus 1 1/2 bus CB 1 1/2 bus alt. CB Tie CB	-	-	No voltage sel.	Select CB configuration
VBaseBus	0.001 - 9999.999	kV	0.001	400.000	Base value for busbar voltage settings
VBaseLine	0.001 - 9999.999	kV	0.001	400.000	Base value for line voltage settings

Table continues on next page

Name	Values (Range)	Unit	Step	Default	Description
PhaseShift	-180 - 180	Deg	5	0	Phase shift
VRatio	0.040 - 25.000	-	0.001	1.000	Voltage ratio
OperationSynch	Disabled Enabled	-	-	Disabled	Operation for synchronizing function Off/On
VHighBusSynch	50.0 - 120.0	%VBB	1.0	80.0	Voltage high limit bus for synchronizing in % of UBaseBus
VHighLineSynch	50.0 - 120.0	%VBL	1.0	80.0	Voltage high limit line for synchrocheck in % of VBaseLine
VDiffSynch	0.02 - 0.50	pu	0.01	0.10	Voltage difference limit for synchronizing in p.u
FreqDiffMin	0.003 - 0.250	Hz	0.001	0.010	Minimum frequency difference limit for synchronizing
FreqDiffMax	0.050 - 0.250	Hz	0.001	0.200	Maximum frequency difference limit for synchronizing
FreqRateChange	0.000 - 0.500	Hz/s	0.001	0.300	Maximum allowed frequency rate of change
tBreaker	0.000 - 60.000	s	0.001	0.080	Closing time of the breaker
tClosePulse	0.050 - 60.000	s	0.001	0.200	Breaker closing pulse duration
tMaxSynch	0.00 - 6000.00	s	0.01	600.00	Resets synch if no close has been made before set time
tMinSynch	0.000 - 60.000	s	0.001	2.000	Minimum time to accept synchronizing conditions
OperationSC	Disabled Enabled	-	-	Enabled	Operation for synchronism-check function Off/On
VHighBusSC	50.0 - 120.0	%VBB	1.0	80.0	Voltage high limit bus for synchrocheck in % of VBaseBus
VHighLineSC	50.0 - 120.0	%VBL	1.0	80.0	Voltage high limit line for synchrocheck in % of UBaseLine
VDiffSC	0.02 - 0.50	pu	0.01	0.15	Voltage difference limit in p.u
FreqDiffA	0.003 - 1.000	Hz	0.001	0.010	Frequency difference limit between bus and line Auto
FreqDiffM	0.003 - 1.000	Hz	0.001	0.010	Frequency difference limit between bus and line Manual
PhaseDiffA	5.0 - 90.0	Deg	1.0	25.0	Phase angle difference limit between bus and line Auto
PhaseDiffM	5.0 - 90.0	Deg	1.0	25.0	Phase angle difference limit between bus and line Manual
tSCA	0.000 - 60.000	s	0.001	0.100	Time delay output for synchrocheck Auto
tSCM	0.000 - 60.000	s	0.001	0.100	Time delay output for synchrocheck Manual
AutoEnerg	Disabled DLLB DBLL Both	-	-	DBLL	Automatic energizing check mode

Table continues on next page

Name	Values (Range)	Unit	Step	Default	Description
ManEnerg	Disabled DLLB DBLL Both	-	-	Both	Manual energizing check mode
ManEnergDBDL	Disabled Enabled	-	-	Disabled	Manual dead bus, dead line energizing
VLiveBusEnerg	50.0 - 120.0	%VBB	1.0	80.0	Voltage high limit bus for energizing check in % of UBaseBus
VLiveLineEnerg	50.0 - 120.0	%VBL	1.0	80.0	Voltage high limit line for energizing check in % of VBaseLine
VDeadBusEnerg	10.0 - 80.0	%VBB	1.0	40.0	Voltage low limit bus for energizing check in % of VBaseBus
VDeadLineEnerg	10.0 - 80.0	%VBL	1.0	40.0	Voltage low limit line for energizing check in % of VBaseLine
VMaxEnerg	50.0 - 180.0	%VB	1.0	115.0	Maximum voltage for energizing in % of VBase, Line and/or Bus
tAutoEnerg	0.000 - 60.000	s	0.001	0.100	Time delay for automatic energizing check
tManEnerg	0.000 - 60.000	s	0.001	0.100	Time delay for manual energizing check

Table 150: SESRSYN (25) Non group settings (basic)

Name	Values (Range)	Unit	Step	Default	Description
SelPhaseBus1	Phase L1 for busbar1 Phase L2 for busbar1 Phase L3 for busbar1 Phase L1L2 for busbar1 Phase L2L3 for busbar1 Phase L3L1 for busbar1 Pos. sequence for busbar1	-	-	Phase L1 for busbar1	Select phase for busbar1
SelPhaseBus2	Phase L1 for busbar2 Phase L2 for busbar2 Phase L3 for busbar2 Phase L1L2 for busbar2 Phase L2L3 for busbar2 Phase L3L1 for busbar2 Pos. sequence for busbar2	-	-	Phase L1 for busbar2	Select phase for busbar2
SelPhaseLine1	Phase L1 for line1 Phase L2 for line1 Phase L3 for line1 Phase L1L2 for line1 Phase L2L3 for line1 Phase L3L1 for line1 Pos. sequence for line1	-	-	Phase L1 for line1	Select phase for line1
SelPhaseLine2	Phase L1 for line2 Phase L2 for line2 Phase L3 for line2 Phase L1L2 for line2 Phase L2L3 for line2 Phase L3L1 for line2 Pos. sequence for line2	-	-	Phase L1 for line2	Select phase for line2

3.12.2 Autorecloser SMBRREC (79)

Function Description	IEC 61850 identification	IEC 60617 identification	ANSI/IEEE C37.2 device number
Autorecloser	SMBRREC	O->I	79

3.12.2.1 Application

Automatic reclosing is a well-established method for the restoration of service in a power system after a transient line fault. The majority of line faults are flashover arcs, which are transient by nature. When the power line is switched off by the operation of line protection and line breakers, the arc de-ionizes and recovers its ability to withstand voltage at a somewhat variable rate. Thus, a certain dead time with a de-energized line is necessary. Line service can then be resumed by automatic reclosing of the line breakers. The dead time selected should be long enough to ensure a high probability of arc de-ionization and successful reclosing.

For individual line breakers, auto-reclosing equipment or functions, the auto-reclosing open time is used to determine line “dead time”. When simultaneous tripping and reclosing at the two line ends occurs, auto-reclosing open time is approximately equal to the line “dead time”. If the open time and dead time differ then, the line will be energized until the breakers at both ends have opened.

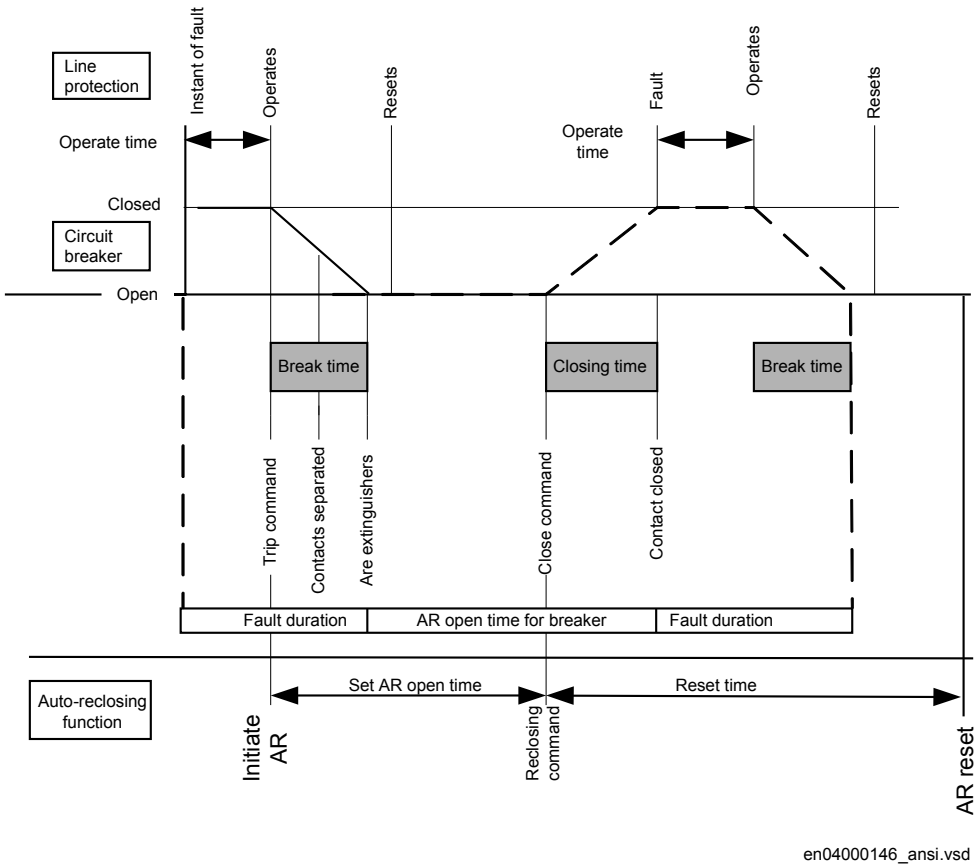

Figure 239: Single-shot automatic reclosing at a permanent fault

Single-pole tripping and single-phase automatic reclosing is a way of limiting the effect of a single-phase line fault on power system operation. Especially at higher voltage levels, the majority of faults are of single-phase type (around 90%). To maintain system stability in power systems with limited meshing or parallel routing single phase auto reclosing is of particular value. During the single phase dead time the system is still capable of transmitting load on the two healthy phases and the system is still synchronized. It requires that each phase breaker operates individually, which is usually the case for higher transmission voltages.

A somewhat longer dead time may be required for single-phase reclosing compared to high-speed three-phase reclosing. This is due to the influence on the fault arc from the voltage and the current in the non-tripped phases.

To maximize the availability of the power system it is possible to choose single pole tripping and automatic reclosing during single-phase faults and three pole tripping and automatic reclosing during multi-phase faults. Three-phase automatic reclosing can be performed with or without the use of a synchronism check, and an energizing check, such as dead line or dead busbar check.

During the single-pole open time there is an equivalent "series"-fault in the system resulting in a flow of zero sequence current. It is therefore necessary to coordinate the residual current protections (ground fault protection) with the single pole tripping and the auto-reclosing function. Attention shall also be paid to “pole discrepancy” that arises when circuit breakers are provided with single pole operating devices. These breakers need pole discrepancy protection. They must also be coordinated with the single pole auto-recloser and blocked during the dead time when a normal discrepancy occurs. Alternatively, they should use a trip time longer than the set single phase dead time.

For the individual line breakers and auto-reclosing equipment, the ”auto-reclosing open time” expression is used. This is the dead time setting for the Auto-Recloser. During simultaneous tripping and reclosing at the two line ends, auto-reclosing open time is approximately equal to the line dead time. Otherwise these two times may differ as one line end might have a slower trip than the other end which means that the line will not be dead until both ends have opened.

If the fault is permanent, the line protection will trip again when reclosing is attempted in order to clear the fault.

It is common to use one automatic reclosing function per line circuit-breaker (CB). When one CB per line end is used, then there is one auto-reclosing function per line end. If auto-reclosing functions are included in duplicated line protection, which means two auto-reclosing functions per CB, one should take measures to avoid uncoordinated reclosing commands. In breaker-and-a-half, double-breaker and ring bus arrangements, two CBs per line end are operated. One auto-reclosing function per CB is recommended. Arranged in such a way, sequential reclosing of the two CBs can be arranged with a priority circuit available in the auto-reclose function. In case of a permanent fault and unsuccessful reclosing of the first CB, reclosing of the second CB is cancelled and thus the stress on the power system is limited. Another advantage with the breaker connected auto-recloser is that checking that the breaker closed before the sequence, breaker prepared for an auto-reclose sequence and so on. is much simpler.

The auto-reclosing function can be selected to perform single-phase and/or three-phase automatic-reclosing from several single-shot to multiple-shot reclosing programs. The three-phase auto-reclosing open time can be set to give either High-Speed Automatic Reclosing (HSAR) or Delayed Automatic-Reclosing (DAR). These expressions, HSAR and DAR, are mostly used for three-phase Reclosing as single phase is always high speed to avoid maintaining the unsymmetrical condition. HSAR usually means a dead time of less than 1 second.

In power transmission systems it is common practise to apply single and/or three phase, single-shot Auto-Reclosing. In Sub-transmission and Distribution systems tripping and auto-reclosing are usually three-phase. The mode of automatic-reclosing varies however. Single-shot and multi-shot are in use. The first shot can have a short delay, HSAR, or a longer delay, DAR. The second and following reclosing shots have

a rather long delay. When multiple shots are used the dead time must harmonize with the breaker duty-cycle capacity.

Automatic-reclosing is usually started by the line protection and in particular by instantaneous tripping of such protection. The auto-reclosing function can be inhibited (blocked) when certain protection functions detecting permanent faults, such as shunt reactor, cable or busbar protection are in operation. Back-up protection zones indicating faults outside the own line are also connected to inhibit the Auto-Reclose.

Automatic-reclosing should not be attempted when closing a CB and energizing a line onto a fault (SOTF), except when multiple-shots are used where shots 2 etc. will be started at SOTF. Likewise a CB in a multi-breaker busbar arrangement which was not closed when a fault occurred should not be closed by operation of the Auto-Reclosing function. Auto-Reclosing is often combined with a release condition from synchronism check and dead line or dead busbar check. In order to limit the stress on turbo-generator sets from Auto-Reclosing onto a permanent fault, one can arrange to combine Auto-Reclosing with a synchronism check on line terminals close to such power stations and attempt energizing from the side furthest away from the power station and perform the synchronism check at the local end if the energizing was successful.

Transmission protection systems are usually sub-divided and provided with two redundant protection IEDs. In such systems it is common to provide auto-reclosing in only one of the sub-systems as the requirement is for fault clearance and a failure to reclose because of the auto-recloser being out of service is not considered a major disturbance. If two auto-reclosers are provided on the same breaker, the application must be carefully checked and normally one must be the master and be connected to inhibit the other auto-recloser if it has started. This inhibit can for example be done from Autorecloser for 3-phase operation(SMBRREC ,79) In progress.

When Single and/or three phase auto-reclosing is considered, there are a number of cases where the tripping shall be three phase anyway. For example:

- Evolving fault where the fault during the dead-time spreads to another phase. The other two phases must then be tripped and a three phase dead-time and auto-reclose initiated
- Permanent fault
- Fault during three phase dead-time
- Auto-reclose out of service or CB not ready for an auto-reclosing cycle

“Prepare three-pole tripping” is then used to switch the tripping to three-pole. This signal is generated by the auto-recloser and connected to the trip function block and also connected outside the IED through IO when a common auto-recloser is provided for two sub-systems. An alternative signal “Prepare 1 Pole tripping” is also provided and can be used as an alternative when the autorecloser is shared with another

subsystem. This provides a fail safe connection so that even a failure in the IED with the auto-recloser will mean that the other sub-system will start a three-pole trip.

A permanent fault will cause the line protection to trip again when it recloses in an attempt to clear the fault.

The auto-reclosing function allows a number of parameters to be adjusted.

Examples:

- number of auto-reclosing shots
- auto-reclosing program
- auto-reclosing open times (dead time) for each shot

Auto-reclosing operation OFF and ON

Operation of the automatic reclosing can be set OFF and ON by a setting parameter and by external control. Parameter *Operation= Disabled*, or *Enabled* sets the function OFF and ON. In setting *Operation=ExternalCtrl*, OFF and ON control is made by input signal pulses, for example, from the control system or from the binary input (and other systems).

When the function is set ON and operative (other conditions such as CB closed and CB Ready are also fulfilled), the output SETON is activated (high). When the function is ready to accept a reclosing start.

Initiate auto-reclosing and conditions for initiation of a reclosing cycle

The usual way to start a reclosing cycle, or sequence, is to start it at tripping by line protection by applying a signal to the input RI. Starting signals can be either, General Trip signals or, only the conditions for Differential, Distance protection Zone 1 and Distance protection Aided trip. In some cases also Directional Ground fault function Aided trip can be connected to start an Auto-Reclose attempt.

In cases where one wants to differentiate three-phase “auto-reclosing open time”, (“dead time”) for different power system configuration or at tripping by different protection stages, one can also use the input RI_HS (Initiate High-Speed Reclosing). When initiating RI_HS, the auto-reclosing open time for three-phase shot 1, *t1 3PhHS* is used.

A number of conditions need to be fulfilled for the start to be accepted and a new auto-reclosing cycle to be started. They are linked to dedicated inputs. The inputs are:

- CBREADY, CB ready for a reclosing cycle, for example, charged operating gear.
- 52a to ensure that the CB was closed when the line fault occurred and start was applied.
- No signal at input INHIBIT that is, no blocking or inhibit signal present. After the start has been accepted, it is latched in and an internal signal “Started” is set. It can be interrupted by certain events, like an “Inhibit” signal.

Initiate auto-reclosing from CB open information

If a user wants to initiate auto-reclosing from the "CB open" position instead of from protection trip signals, the function offers such a possibility. This starting mode is selected with the setting parameter *StartByCBOpen=Enabled*. It is then necessary to block reclosing for all manual trip operations. Typically *CBAuxContType=NormClosed* is also set and a CB auxiliary contact of type NC (normally closed, 52b) is connected to inputs 52a and RI. When the signal changes from “CB closed” to “CB open” an auto-reclosing start pulse is generated and latched in the function, subject to the usual checks. Then the reclosing sequence continues as usual. One needs to connect signals from manual tripping and other functions, which shall prevent reclosing, to the input INHIBIT.

Blocking of the autorecloser

Auto-Reclose attempts are expected to take place only in the event of transient faults on the own line. The Auto-Recloser must be blocked for the following conditions:

- Tripping from Delayed Distance protection zones
- Tripping from Back-up protection functions
- Tripping from Breaker failure function
- Intertrip received from remote end Breaker failure function
- Busbar protection tripping

Depending of the starting principle (General Trip or only Instantaneous trip) adopted above the delayed and back-up zones might not be required. Breaker failure local and remote must however always be connected.

Control of the auto-reclosing open time for shot 1

Up to four different time settings can be used for the first shot, and one extension time. There are separate settings for single-, two- and three-phase auto-reclosing open time, *t1 1Ph, t1 2Ph, t1 3Ph*. If no particular input signal is applied, and an auto-reclosing program with single-phase reclosing is selected, the auto-reclosing open time *t1 1Ph* will be used. If one of the inputs TR2P or TR3P is activated in connection with the start, the auto-reclosing open time for two-phase or three-phase reclosing is used. There is also a separate time setting facility for three-phase high-speed auto-reclosing without Synchrocheck, *t1 3PhHS*, available for use when required. It is activated by the RI_HS input.

An auto-reclosing open time extension delay, *tExtended t1*, can be added to the normal shot 1 delay. It is intended to come into use if the communication channel for permissive line protection is lost. In such a case there can be a significant time difference in fault clearance at the two ends of the line. A longer “auto-reclosing open time” can then be useful. This extension time is controlled by setting parameter *Extended t1=O*n and the input PLCLOST.

Long trip signal

In normal circumstances the trip command resets quickly because of fault clearance. The user can set a maximum trip pulse duration *tTrip*. A longer trip signal extends the auto-reclosing open time by tExtended t1. If *Extended t1=Off*, a long trip signal interrupts the reclosing sequence in the same way as a signal to input INHIBIT.

Maximum number of reclosing shots

The maximum number of reclosing shots in an auto-reclosing cycle is selected by the setting parameter *NoOfShots*. The type of reclosing used at the first reclosing shot is set by parameter *FirstShot*. The first alternative is three-phase reclosing. The other alternatives include some single-phase or two-phase reclosing. Usually there is no two-pole tripping arranged, and then there will be no two-phase reclosing.

The decision is also made in the tripping logic (SMPTTRC ,94) function block where the setting *3Ph, 1/3Ph (or1/2/3Ph)* is selected.

FirstShot=3ph (normal setting for a single 3 phase shot)

3-phase reclosing, one to five shots according to setting *NoOfShots*. The output Prepare three-pole trip PREP3P is always set (high). A trip operation is made as a three-pole trip at all types of fault. The reclosing is as a three-phase Reclosing as in mode 1/2/3ph described below. All signals, blockings, inhibits, timers, requirements and so on. are the same as in the example described below.

FirstShot=1/2/3ph

1-phase, 2-phase or 3-phase reclosing first shot, followed by 3-phase reclosing shots, if selected. Here, the auto-reclosing function is assumed to be "On" and "Ready". The breaker is closed and the operation gear ready (operating energy stored). Input RI (or RI_HS) is received and sealed-in. The output READY is reset (set to false). Output ACTIVE is set.

- If TR2P is low and TR3P is low (1-pole trip): The timer for 1-phase reclosing open time is started and the output 1PT1 (1-phase reclosing in progress) is

activated. It can be used to suppress pole disagreement trip and ground-fault protection during the 1-phase open interval.

- If TR2P is high and TR3P is low (2-pole trip): The timer for 2-phase reclosing open time is started and the output 2PT1 (2-phase reclosing in progress) is activated.
- If TR3P is high (3-pole trip): The timer for 3-phase auto-reclosing open time, *t1 3Ph* or *t1 3PhHS* is started and output 3PT1 (3-phase auto-reclosing shot 1 in progress) is set.

While any of the auto-reclosing open time timers are running, the output INPROGR is activated. When the "open reset" timer runs out, the respective internal signal is transmitted to the output module for further checks and to issue a closing command to the circuit breaker.

When a CB closing command is issued the output prepare 3-pole trip is set. When issuing a CB closing command a “reset” timer *tReset* is started. If no tripping takes place during that time the auto-reclosing function resets to the “Ready” state and the signal ACTIVE resets. If the first reclosing shot fails, a 3-pole trip will be initiated and 3-phase reclosing can follow, if selected.

FirstShot=1/2ph 1-phase or 2-phase reclosing in the first shot.

In 1-pole or 2-pole tripping, the operation is as in the above described example, program mode *1/2/3ph*. If the first reclosing shot fails, a 3-pole trip will be issued and 3-phase reclosing can follow, if selected. In the event of a 3-pole trip, TR3P high, the auto-reclosing will be blocked and no reclosing takes place.

FirstShot=1ph + 1*2ph 1-phase or 2-phase reclosing in the first shot

The 1-phase reclosing attempt can be followed by 3-phase reclosing, if selected. A failure of a 2-phase reclosing attempt will block the auto-reclosing. If the first trip is a 3-pole trip the auto-reclosing will be blocked. In the event of a 1-pole trip, (TR2P low and TR3P low), the operation is as in the example described above, program mode *1/2/3ph*. If the first reclosing shot fails, a 3-pole trip will be initiated and 3-phase reclosing can follow, if selected. A maximum of four additional shots can be done (according to the *NoOfShots* parameter). At 2-pole trip (TR2P high and TR3P low), the operation is similar to the above. But, if the first reclosing shot fails, a 3-pole trip will be issued and the auto-reclosing will be blocked. No more shots are attempted! The expression *1*2ph* should be understood as “Just one shot at 2-phase reclosing” During 3-pole trip (TR2P low and TR3P high) the auto-reclosing will be blocked and no reclosing takes place.

FirstShot=1ph + 1*2/3ph 1-phase, 2-phase or 3-phase reclosing in the first shot

At 1-pole trip, the operation is as described above. If the first reclosing shot fails, a 3-pole trip will be issued and 3-phase reclosing will follow, if selected. At 2-pole or 3-pole trip, the operation is similar to the above. But, if the first reclosing shot fails, a 3-

pole trip command will be issued and the auto-reclosing will be blocked. No more shots take place *1*2/3ph* should be understood as “Just one shot at 2-phase or 3-phase reclosing”.

FirstShot=1ph + 1*2/3ph 1-phase, 2-phase or 3-phase reclosing in the first shot

At 1-pole trip, the operation is as described above. If the first reclosing shot fails, a 3-pole trip will be issued and 3-phase reclosing will follow, if selected. At 2-pole or 3-pole trip, the operation is similar as above. But, if the first reclosing shot fails, a 3-pole trip will be issued and the auto-reclosing will be blocked. No more shots take place! “1*2/3ph” should be understood as “Just one shot at 2-phase or 3-phase reclosing”.

Table 151: Type of reclosing shots at different settings of “FirstShot”

First Shot	1st shot	2nd-5th shot
3ph	3ph	3ph
1/2/3ph	1ph	3ph
2ph	3ph	--
3ph	3ph	--
1/2ph	1ph	3ph
2ph	3ph	--
	--	--
1ph + 1*2ph	1ph	3ph
2ph	--	--
	--	--
1/2ph + 1*3ph	1ph	3ph
	2ph	3ph
	3ph	--
1ph + 1*2/3ph	1ph	3ph
	2ph	--
	3ph	--

A start of a new reclosing cycle is blocked during the set “reset time” after the selected number of reclosing shots have been made.

External selection of auto-reclose mode

The auto-reclose mode can be selected by use of the available logic function blocks. Below is an example where the choice of mode is done from a symbol on the local HMI through selector switch function block with only 3 phase or 1/3 phase mode, but alternatively there can for example, be a physical selector switch on the front of the panel which is connected to a binary to integer function block (B16I).

If the PSTO input is used, connected to the Local-Remote switch on the local HMI, the choice can also be from the station HMI system, typically ABB Microscada through IEC 61850 communication.

The connection example for selection of the auto-reclose mode is shown in . Selected names are just examples but note that the symbol on local HMI can only show three signs.

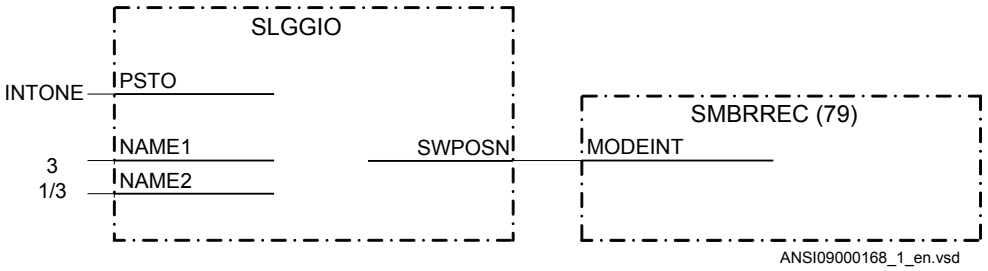

Figure 240: Selection of the auto-reclose mode from a local HMI symbol through a selector switch function block

Reclosing reset timer

The reset timer *tReset* defines the time it takes from issue of the reclosing command, until the reclosing function resets. Should a new trip occur during this time, it is treated as a continuation of the first fault. The reclaim timer is started when the CB closing command is given.

Pulsing of the CB closing command and Counter

The CB closing command, CLOSECMD is given as a pulse with a duration set by parameter *tPulse*. For circuit-breakers without an anti-pumping function, close pulse cutting can be used. It is selected by parameter *CutPulse=On*. In case of a new trip pulse (start), the closing command pulse is then cut (interrupted). The minimum closing pulse length is always 50 ms. At the issue of the Reclosing command, the appropriate Reclosing operation counter is incremented. There is a counter for each type of Reclosing and one for the total number of Reclosing commands.

Transient fault

After the Reclosing command the reset timer keeps running for the set time. If no tripping occurs within this time, *tReset*, the Auto-Reclosing will reset. The CB remains closed and the operating gear recharges. The input signals 52a and CBREADY will be set

Permanent fault and reclosing unsuccessful signal

If a new trip occurs, and a new input signal RI or TRSOTF appears, after the CB closing command, the output UNSUCCL (unsuccessful closing) is set high. The timer for the first shot can no longer be started. Depending on the set number of Reclosing shots further shots may be made or the Reclosing sequence is ended. After reset timer

time-out the Auto-Reclosing function resets, but the CB remains open. The “CB closed” information through the input 52a is missing. Thus, the reclosing function is not ready for a new reclosing cycle.

Normally, the signal UNSUCCL appears when a new trip and start is received after the last reclosing shot has been made and the auto-reclosing function is blocked. The signal resets after reset time. The “unsuccessful” signal can also be made to depend on CB position input. The parameter *UnsucClByCBChk* should then be set to *CBCheck*, and a timer *tUnsucCl* should be set too. If the CB does not respond to the closing command and does not close, but remains open, the output UNSUCCL is set high after time *tUnsucCl*. The Unsuccessful output can for example, be used in Multi-Breaker arrangement to cancel the auto-reclosing function for the second breaker, if the first breaker closed onto a persistent fault. It can also be used to generate a Lock-out of manual closing until the operator has reset the Lock-out, see separate section.

Lock-out initiation

In many cases there is a requirement that a Lock-out is generated when the auto-reclosing attempt fails. This is done with logic connected to the in- and outputs of the Autoreclose function and connected to Binary IO as required. Many alternative ways of performing the logic exist depending on whether manual closing is interlocked in the IED, whether an external physical Lock-out relay exists and whether the reset is hardwired, or carried out by means of communication. There are also different alternatives regarding what shall generate Lock-out. Examples of questions are:

- Shall back-up time delayed trip give Lock-out (normally yes)
- Shall Lock-out be generated when closing onto a fault (mostly)
- Shall Lock-out be generated when the Autorecloser was OFF at the fault or for example, in Single phase AR mode and the fault was multi-phase (normally not as not closing attempt has been given)
- Shall Lock-out be generated if the Breaker did not have sufficient operating power for an auto-reclosing sequence (normally not as no closing attempt has been given)

In figures 241 and 242 the logic shows how a closing Lock-out logic can be designed with the Lock-out relay as an external relay alternatively with the Lock-out created internally with the manual closing going through the Synchro-check function. An example of Lock-out logic.

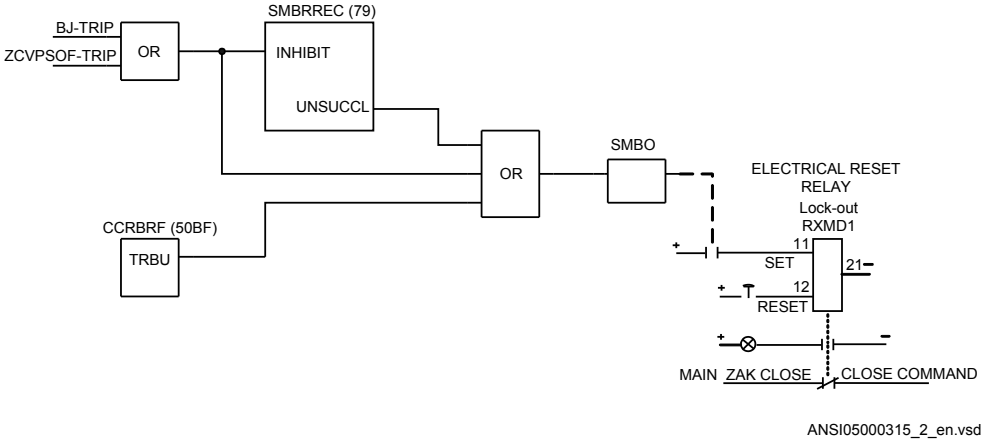

Figure 241: Lock-out arranged with an external Lock-out relay

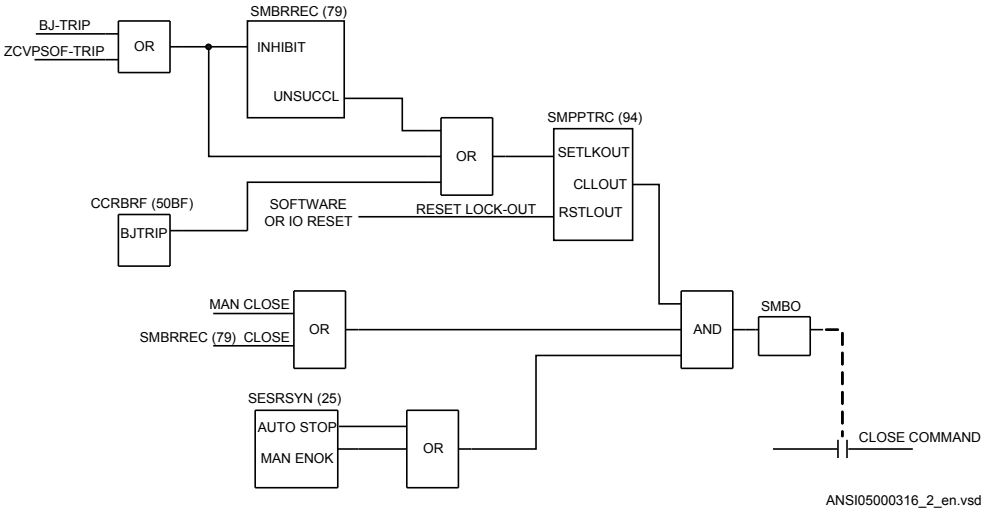

Figure 242: Lock-out arranged with internal logic with manual closing going through in IED

Evolving fault

An evolving fault starts as a single-phase fault which leads to single-pole tripping and then the fault spreads to another phase. The second fault is then cleared by three-pole tripping.

The Auto-Reclosing function will first receive a trip and initiate signal (RI) without any three-phase signal (TR3P). The Auto-Reclosing function will start a single-phase reclosing, if programmed to do so. At the evolving fault clearance there will be a new signal RI and three-pole trip information, TR3P. The single-phase reclosing sequence

will then be stopped, and instead the timer, *t1 3Ph*, for three-phase reclosing will be started from zero. The sequence will continue as a three-phase reclosing sequence, if it is a selected alternative reclosing mode.

The second fault which can be single phase is tripped three phase because trip module (TR) in the IED has an evolving fault timer which ensures that second fault is always tripped three phase. For other types of relays where the relays do not include this function the output PREP3PH (or the inverted PERMIT1PH) is used to prepare the other sub-system for three pole tripping. This signal will, for evolving fault situations be activated a short time after the first trip has reset and will thus ensure that new trips will be three phase.

Automatic continuation of the reclosing sequence

SMBRREC (79) function can be programmed to proceed to the following reclosing shots (if multiple shots are selected) even if start signals are not received from the protection functions, but the breaker is still not closed. This is done by setting parameter *AutoCont = Enabled* and *tAutoContWait* to the required delay for the function to proceed without a new start.

Thermal overload protection holding the auto-reclosing function back

If the input THOLHOLD (thermal overload protection holding reclosing back) is activated, it will keep the reclosing function on a hold until it is reset. There may thus be a considerable delay between start of Auto-Reclosing and reclosing command to the circuit-breaker. An external logic limiting the time and sending an inhibit to the INHIBIT input can be used. The input can also be used to set the Auto-Reclosing on hold for a longer or shorter period.

3.12.2.2 Setting guidelines

Configuration

Use the PCM600 configuration tool to configure signals.

Autorecloser function parameters are set via the local HMI or Parameter Setting Tool (PST). Parameter Setting Tool is a part of PCM600.

Recommendations for input signals

Please see examples in figure 243, figure 244 and figure 245 of default factory configurations.

ON and OFF

These inputs can be connected to binary inputs or to a communication interface block for external control.

RI

It should be connected to the trip output protection function, which starts the autorecloser for 3-phase operation (SMBRREC ,79) function. It can also be connected to a binary input for start from an external contact. A logical OR-gate can be used to combine the number of start sources.

If *StartByCBOpen* is used, the CB Open condition shall also be connected to the input RI.

RI_HS, Initiate High-speed auto-reclosing

It is often not used and connected to FALSE. It may be used when one wants to use two different dead times in different protection trip operations. This input starts the dead time *t1 3PhHS*. High-speed reclosing shot 1 started by this input is without a synchronization check.

INHIBIT

To this input shall be connected signals that interrupt a reclosing cycle or prevent a start from being accepted. Such signals can come from protection for a line connected shunt reactor, from transfer trip receive, from back-up protection functions, busbar protection trip or from breaker failure protection. When the CB open position is set to start SMBRREC(79) , then manual opening must also be connected here. The inhibit is often a combination of signals from external IEDs via the IO and internal functions. An OR gate is then used for the combination.

52a and CBREADY

These should be connected to binary inputs to pick-up information from the CB. The 52a input is interpreted as CB Closed, if parameter *CBAuxContType* is set *NormOpen*, which is the default setting. At three operating gears in the breaker (single pole operated breakers) the connection should be “All poles closed” (series connection of the NO contacts) or “At least one pole open” (parallel connection of NC contacts) if the *CBAuxContType* is set to *NormClosed*. The “CB Ready” is a signal meaning that the CB is ready for a reclosing operation, either Close-Open (CO), or Open-Close-Open (OCO). If the available signal is of type “CB not charged” or “not ready”, an inverter can be inserted in front of the CBREADY input.

SYNC

This is connected to the internal synchronism check function when required. It can also be connected to a binary input for synchronization from an external device. If neither internal nor external synchronism or energizing check is required, it can be connected to a permanently high source, TRUE. The signal is required for three phase shots 1-5 to proceed (Note! Not the HS step).

PLCLOST

This is intended for line protection permissive signal channel lost (fail) for example, PLC= Power Line Carrier fail. It can be connected, when required to prolong the AutoReclosing time when communication is not working, that is, one line end might trip with a zone 2 delay. When the function is not used it is set to FALSE.

TRSOTF

This is the signal “Trip by Switch Onto Fault”. It is usually connected to the “switch onto fault” output of line protection if multi-shot Auto-Reclose attempts are used. The input will start the shots 2-5. For single shot applications the input is set to FALSE.

THOLHOLD

Signal “Thermal overload protection holding back Auto-Reclosing”. It is normally set to FALSE. It can be connected to a thermal overload protection trip signal which resets only when the thermal content has gone down to an acceptable level, for example, 70%. As long as the signal is high, indicating that the line is hot, the Auto-Reclosing is held back. When the signal resets, a reclosing cycle will continue. Please observe that this have a considerable delay. Input can also be used for other purposes if for some reason the Auto-Reclose shot is halted.

TR2P and TR3P

Signals for two-pole and three-pole trip. They are usually connected to the corresponding output of the TRIP block. They control the choice of dead time and the reclosing cycle according to the selected program. Signal TR2P needs to be connected only if the trip has been selected to give 1/2/3 pole trip and an auto reclosing cycle with two phase reclosing is foreseen.

WAIT

Used to hold back reclosing of the “low priority unit” during sequential reclosing. See “Recommendation for multi-breaker arrangement” below. The signal is activated from output WFMASTER on the second breaker Auto-Recloser in multi-breaker arrangements.

BLKON

Used to block the autorecloser for 3-phase operation (SMBRREC ,79) function for example, when certain special service conditions arise. Input is normally set to FALSE. When used, blocking must be reset with BLOCKOFF.

BLOCKOFF

Used to Unblock SMBRREC (79) function when it has gone to Block due to activating input BLKON or by an unsuccessful Auto-Reclose attempt if the setting*BlockByUnsucCl* is set to *Enabled*. Input is normally set to FALSE.

RESET

Used to Reset SMBRREC (79) to start condition. Possible Thermal overload Hold will be reset. Positions, setting On-Off. will be started and checked with set times. Input is normally set to FALSE.

Recommendations for output signals

Please see figure 243, figure 244 and figure 245 and default factory configuration for examples.

SETON

Indicates that Autorecloser for 3-phase operation (SMBRREC ,79) function is switched on and operative.

BLOCKED

Indicates that SMRREC (79) function is temporarily or permanently blocked.

ACTIVE

Indicates that SMBRREC (79) is active, from start until end of Reset time.

INPROGR

Indicates that a sequence is in progress, from start until reclosing command.

UNSUCCL

Indicates unsuccessful reclosing.

CLOSECMD

Connect to a binary output for circuit-breaker closing command.

READY

Indicates that SMBRREC (79) function is ready for a new and complete reclosing sequence. It can be connected to the zone extension of a line protection should extended zone reach before automatic reclosing be necessary.

1PT1 and 2PT1

Indicates that single-phase or two-phase automatic reclosing is in progress. It is used to temporarily block an ground-fault and/or pole disagreement function during the single-phase or two-phase open interval.

3PT1,-3PT2,-3PT3,-3PT4 and -3PT5

Indicates that three-phase automatic reclosing shots 1-5 are in progress. The signals can be used as an indication of progress or for own logic.

PREP3P

Prepare three-pole trip is usually connected to the trip block to force a coming trip to be a three-phase one. If the function cannot make a single-phase or two-phase reclosing, the tripping should be three-pole.

PERMIT1P

Permit single-pole trip is the inverse of PREP1P. It can be connected to a binary output relay for connection to external protection or trip relays. In case of a total loss of auxiliary power, the output relay drops and does not allow single-pole trip. If needed, the signal can be inverted by a contact of the output relay breaking.

WFMASTER

Wait from master is used in high priority units to hold back reclosing of the low priority unit during sequential reclosing. Refer to the recommendation for multi-breaker arrangements in figure 245.

Other outputs

The other outputs can be connected for indication, disturbance recording, as required.

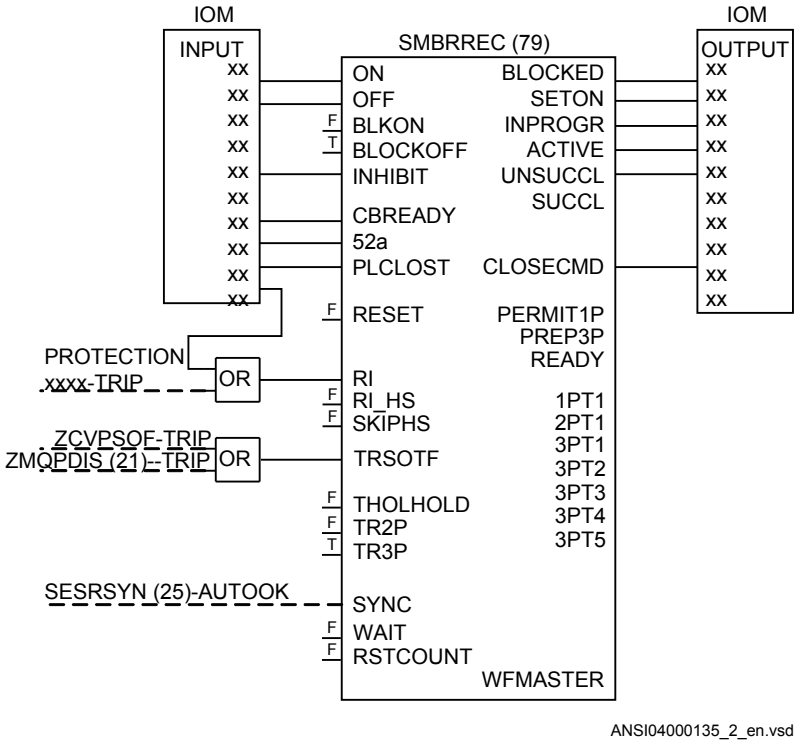

Figure 243: Example of I/O-signal connections at a three-phase reclosing function

Setting recommendations for multi-breaker arrangements

Sequential reclosing in multi-breaker arrangements, like breaker-and-a-half, double breaker and ring bus, is achieved by giving the two line breakers different priorities. Please refer to figure 245. In a single breaker arrangement the setting is *Priority = None*. In a multi-breaker arrangement the setting for the first CB, the Master, is *Priority = High* and for the other CB *Priority = Low*.

While the reclosing of the master is in progress, it issues the signal WFMASTER. A reset delay of one second ensures that the WAIT signal is kept high for the duration of the breaker closing time. After an unsuccessful reclosing it is also maintained by the signal UNSUCCL. In the slave unit, the signal WAIT holds back a reclosing operation. When the WAIT signal is reset at the time of a successful reclosing of the first CB, the slave unit is released to continue the reclosing sequence. A parameter *tWait* sets a maximum waiting time for the reset of the WAIT. At time-out it interrupts the reclosing cycle of the slave unit. If reclosing of the first breaker is unsuccessful, the output signal UNSUCCL connected to the input INHIBIT of the slave unit interrupts the reclosing sequence of the latter.

The signals can be cross-connected to allow simple changing of the priority by just setting the *High* and the *Low* priorities without changing the configuration. The inputs 52a for each breaker are important in multi breaker arrangements to ensure that the CB was closed at the beginning of the cycle. If the High priority breaker is not closed the High priority moves to the low priority breaker.

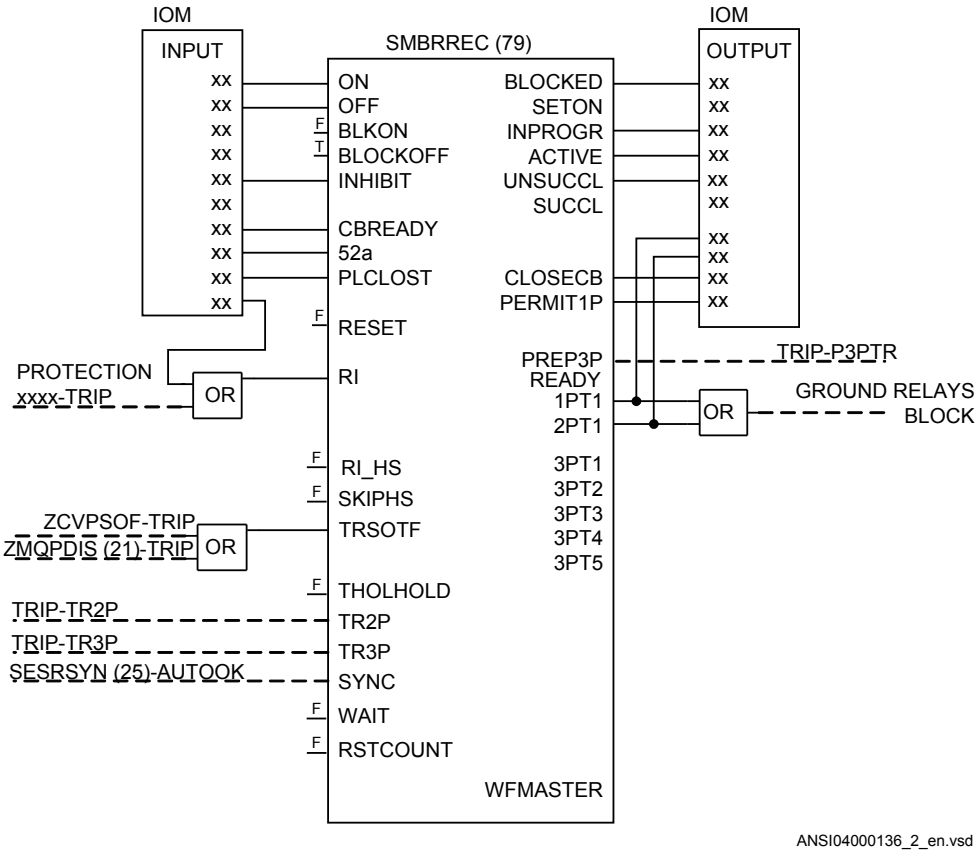

Figure 244: Example of I/O-signal connections in a single-phase reclosing function

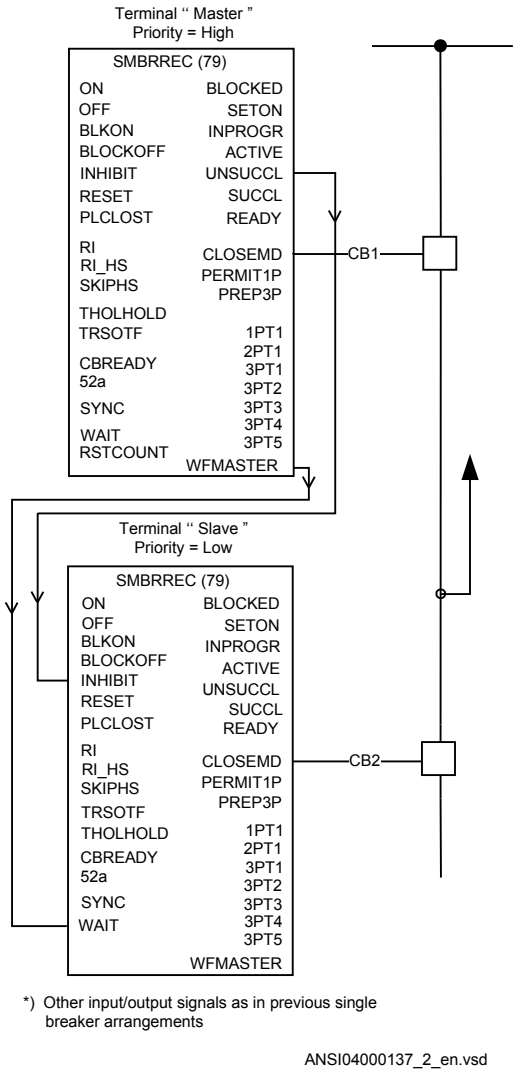

Figure 245: Additional input and output signals at multi-breaker arrangement

Auto-recloser parameter settings

The operation of the Autorecloser for 3-phase operation (SMBRREC ,79) function can be switched *Enabled* and *Disabled*. The setting makes it possible to switch it *Enabled* or *Disabled* using an external switch via IO or communication ports.

, Number of reclosing shots

In power transmission 1 shot is mostly used. In most cases one reclosing shot is sufficient as the majority of arcing faults will cease after the first reclosing shot. In

power systems with many other types of faults caused by other phenomena, for example wind, a greater number of reclose attempts (shots) can be motivated.

First shot and reclosing program

There are six different possibilities in the selection of reclosing programs. The type of reclosing used for different kinds of faults depends on the power system configuration and the users practices and preferences. When the circuit-breakers only have three-phase operation, then three-phase reclosing has to be chosen. This is usually the case in subtransmission and distribution lines. Three-pole tripping and reclosing for all types of faults is also widely accepted in completely meshed power systems. In transmission systems with few parallel circuits, single-phase reclosing for single-phase faults is an attractive alternative for maintaining service and system stability.

Auto-reclosing open times, dead times

Single-phase auto-reclosing time: A typical setting is *t1 1Ph = 800ms*. Due to the influence of energized phases the arc extinction may not be instantaneous. In long lines with high voltage the use of shunt reactors in the form of a WYE with a neutral reactor improves the arc extinction.

Three-phase shot 1 delay: For three-phase High-Speed Auto-Reclosing (HSAR) a typical open time is 400ms. Different local phenomena, such as moisture, salt, pollution, can influence the required dead time. Some users apply Delayed Auto-Reclosing (DAR) with delays of 10s or more. The delay of reclosing shot 2 and possible later shots are usually set at 30s or more. A check that the CB duty cycle can manage the selected setting must be done. The setting can in some cases be restricted by national regulations. For multiple shots the setting of shots 2-5 must be longer than the circuit breaker duty cycle time.

and , Extended auto-reclosing open time for shot 1.

The communication link in a permissive (not strict) line protection scheme, for instance a power line carrier (PLC) link, may not always be available. If lost, it can result in delayed tripping at one end of a line. There is a possibility to extend the auto-reclosing open time in such a case by use of an input to PLCLOST, and the setting parameters. Typical setting in such a case: *Extended t1 = On* and *tExtended t1 = 0.8 s*.

tSync, Maximum wait time for synchronismcheck

The time window should be coordinated with the operate time and other settings of the synchronism check function. Attention should also be paid to the possibility of a power swing when reclosing after a line fault. Too short a time may prevent a potentially successful reclosing.

tTrip, Long trip pulse

Usually the trip command and initiate auto-reclosing signal reset quickly as the fault is cleared. A prolonged trip command may depend on a CB failing to clear the fault. A trip signal present when the CB is reclosed will result in a new trip. Depending on the setting *Extended t1 = Off* or On a trip/initiate pulse longer than the *set time tTrip* will either block the reclosing or extend the auto-reclosing open time. A trip pulse longer than the set time *tTrip* will inhibit the reclosing. At a setting somewhat longer than the auto-reclosing open time, this facility will not influence the reclosing. A typical setting of *tTrip* could be close to the auto-reclosing open time.

tInhibit, Inhibit resetting delay

A typical setting is *tInhibit = 5.0 s* to ensure reliable interruption and temporary blocking of the function. Function will be blocked during this time after the *tinhibit* has been activated.

tReset, Reset time

The Reset time sets the time for resetting the function to its original state, after which a line fault and tripping will be treated as an independent new case with a new reclosing cycle. One may consider a nominal CB duty cycle of for instance, O-0.3sec CO- 3 min. – CO. However the 3 minute (180 s) recovery time is usually not critical as fault levels are mostly lower than rated value and the risk of a new fault within a short time is negligible. A typical time may be *tReset = 60 or 180 s* dependent of the fault level and breaker duty cycle.

StartByCBOpen

The normal setting is *Disabled*. It is used when the function is started by protection trip signals.

FollowCB

The usual setting is *Follow CB = Disabled*. The setting *Enabled* can be used for delayed reclosing with long delay, to cover the case when a CB is being manually closed during the “auto-reclosing open time” before the auto-reclosing function has issued its CB closing command.

tCBClosedMin

A typical setting is 5.0 s. If the CB has not been closed for at least this minimum time, a reclosing start will not be accepted.

CBAuxContType, CB auxiliary contact type

It shall be set to correspond to the CB auxiliary contact used. A *NormOpen* contact is recommended in order to generate a positive signal when the CB is in the closed position.

CBReadyType, Type of CB ready signal connected

The selection depends on the type of performance available from the CB operating gear. At setting *OCO* (CB ready for an Open – Close – Open cycle), the condition is checked only at the start of the reclosing cycle. The signal will disappear after tripping, but the CB will still be able to perform the C-O sequence. For the selection *CO* (CB ready for a Close – Open cycle) the condition is also checked after the set auto-reclosing dead time. This selection has a value first of all at multi-shot reclosing to ensure that the CB is ready for a C-O sequence at shot 2 and further shots. During single-shot reclosing, the *OCO* selection can be used. A breaker shall according to its duty cycle always have storing energy for a CO operation after the first trip. (IEC 56 duty cycle is O-0.3sec CO-3minCO).

tPulse, Breaker closing command pulse duration

The pulse should be long enough to ensure reliable operation of the CB. A typical setting may be *tPulse=200 ms*. A longer pulse setting may facilitate dynamic indication at testing, for example, in “Debug” mode of Application Configuration tool (ACT). In CBs without anti-pumping relays, the setting *CutPulse = Enabled* can be used to avoid repeated closing operation when reclosing onto a fault. A new initiation will then cut the ongoing pulse.

BlockByUnsucCl

Setting of whether an unsuccessful auto-reclose attempt shall set the Auto-Reclose in block. If used the inputs BLOCKOFF must be configured to unblock the function after an unsuccessful Reclosing attempt. Normal setting is *Disabled*.

UnsucClByCBCheck, Unsuccessful closing by CB check

The normal setting is *NoCBCheck*. The “auto-reclosing unsuccessful” event is then decided by a new trip within the reset time after the last reclosing shot. If one wants to get the UNSUCCL (Unsuccessful closing) signal in the case the CB does not respond to the closing command, CLOSECMD, one can set *UnsucClByCBCheck= CB Check* and set *tUnsucCl* for instance to 1.0 s.

Priority and time *tWaitForMaster*

In single CB applications, one sets *Priority = None*. At sequential reclosing the function of the first CB, e.g. near the busbar, is set *Priority = High* and for the second CB *Priority = Low*. The maximum waiting time, *tWaitForMaster* of the second CB is set longer than the “auto-reclosing open time” and a margin for synchronism check at the first CB. Typical setting is *tWaitForMaster=2sec*.

AutoCont and *tAutoContWait*, Automatic continuation to the next shot if the CB is not closed within the set time

The normal setting is *AutoCont = Disabled*. The *tAutoContWait* is the length of time SMBRREC (79) waits to see if the breaker is closed when *AutoCont* is set to *Enabled*. Normally, the setting can be *tAutoContWait = 2 sec*.

3.12.2.3 Setting parameters

Table 152: SMBRREC (79) Group settings (basic)

Name	Values (Range)	Unit	Step	Default	Description
Operation	Disabled External ctrl Enabled	-	-	External ctrl	Off, ExternalCtrl, On
ARMode	3 phase 1/2/3ph 1/2ph 1ph+1*2ph 1/2ph+1*3ph 1ph+1*2/3ph	-	-	1/2/3ph	The AR mode selection e.g. 3ph, 1/3ph
t1 1Ph	0.000 - 60.000	s	0.001	1.000	Open time for shot 1, single-phase
t1 3Ph	0.000 - 60.000	s	0.001	6.000	Open time for shot 1, delayed reclosing 3ph
t1 3PhHS	0.000 - 60.000	s	0.001	0.400	Open time for shot 1, high speed reclosing 3ph
tReset	0.00 - 6000.00	s	0.01	60.00	Duration of the reset time
tSync	0.00 - 6000.00	s	0.01	30.00	Maximum wait time for synchronism-check OK
tTrip	0.000 - 60.000	s	0.001	0.200	Maximum trip pulse duration
tPulse	0.000 - 60.000	s	0.001	0.200	Duration of the circuit breaker closing pulse
tCBClosedMin	0.00 - 6000.00	s	0.01	5.00	Minimum time that CB must be closed before new sequence allows
tUnsucCl	0.00 - 6000.00	s	0.01	30.00	Wait time for CB before indicating Unsuccessful/Successful
Priority	None Low High	-	-	None	Priority selection between adjacent terminals None/Low/High
tWaitForMaster	0.00 - 6000.00	s	0.01	60.00	Maximum wait time for release from Master

Table 153: SMBRREC (79) Group settings (advanced)

Name	Values (Range)	Unit	Step	Default	Description
NoOfShots	1 2 3 4 5	-	-	1	Max number of reclosing shots 1-5
StartByCBOpen	Disabled Enabled	-	-	Disabled	To be set ON if AR is to be started by CB open position
CBAuxContType	NormClosed NormOpen	-	-	NormOpen	Select the CB aux contact type NC/NO for 52a input
CBReadyType	CO OCO	-	-	CO	Select type of circuit breaker ready signal CO/OCO
t1 2Ph	0.000 - 60.000	s	0.001	1.000	Open time for shot 1, two-phase
t2 3Ph	0.00 - 6000.00	s	0.01	30.00	Open time for shot 2, three-phase
t3 3Ph	0.00 - 6000.00	s	0.01	30.00	Open time for shot 3, three-phase
t4 3Ph	0.00 - 6000.00	s	0.01	30.00	Open time for shot 4, three-phase
t5 3Ph	0.00 - 6000.00	s	0.01	30.00	Open time for shot 5, three-phase
Extended t1	Disabled Enabled	-	-	Disabled	Extended open time at loss of permissive channel Off/On
tExtended t1	0.000 - 60.000	s	0.001	0.500	3Ph Dead time is extended with this value at loss of perm ch
tInhibit	0.000 - 60.000	s	0.001	5.000	Inhibit reclosing reset time
CutPulse	Disabled Enabled	-	-	Disabled	Shorten closing pulse at a new trip Off/On
Follow CB	Disabled Enabled	-	-	Disabled	Advance to next shot if CB has been closed during dead time
AutoCont	Disabled Enabled	-	-	Disabled	Continue with next reclosing-shot if breaker did not close
tAutoContWait	0.000 - 60.000	s	0.001	2.000	Wait time after close command before proceeding to next shot
UnsucClByCBChk	NoCBCheck CB check	-	-	NoCBCheck	Unsuccessful closing signal obtained by checking CB position
BlockByUnsucCl	Disabled Enabled	-	-	Disabled	Block AR at unsuccessful reclosing
ZoneSeqCoord	Disabled Enabled	-	-	Disabled	Coordination of down stream devices to local prot unit’s AR

3.12.3 Apparatus control APC

3.12.3.1 Application

The apparatus control is a function for control and supervising of circuit breakers, disconnectors, and grounding switches within a bay. Permission to operate is given after evaluation of conditions from other functions such as interlocking, synchronism check, operator place selection and external or internal blockings.

Figure 246 gives an overview from what places the apparatus control function receive commands. Commands to an apparatus can be initiated from the Control Centre (CC), the station HMI or the local HMI on the IED front.

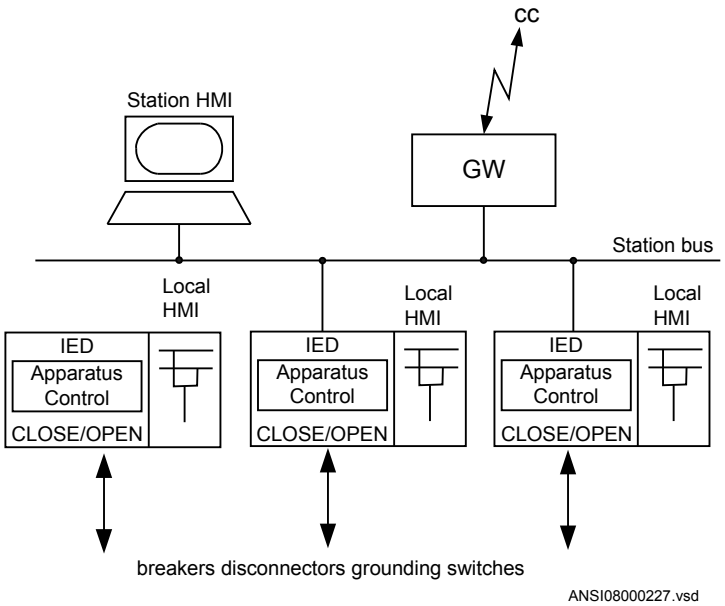

Figure 246: Overview of the apparatus control functions

Features in the apparatus control function:

- Operation of primary apparatuses
- Select-Execute principle to give high security
- Selection and reservation function to prevent simultaneous operation
- Selection and supervision of operator place
- Command supervision
- Block/deblock of operation
- Block/deblock of updating of position indications
- Substitution of position indications
- Overriding of interlocking functions
- Overriding of synchronism check

- Pole discrepancy supervision
- Operation counter
- Suppression of Mid position

The apparatus control function is realized by means of a number of function blocks designated:

- Switch controller SCSWI
- Circuit breaker SXCBR
- Circuit switch SXSWI
- Bay control QCBAY
- Position evaluation POS_EVAL
- Bay reserve QCRSV
- Reservation input RESIN
- Local remote LOCREM
- Local remote control LOCREMCTRL

SCSWI, SXCBR, SXSWI and CBAY are logical nodes according to IEC 61850. The signal flow between these function blocks appears in figure 247. To realize the reservation function, the function blocks Reservation input (RESIN) and Bay reserve (QCRSV) also are included in the apparatus control function. The application description for all these functions can be found below. The function SCILO in the figure below is the logical node for interlocking.

Control operation can be performed from the local IED HMI. If the administrator has defined users with the UMT tool, then the local/remote switch is under authority control. If not, the default (factory) user is the SuperUser that can perform control operations from the local IED HMI without LogOn. The default position of the local/remote switch is on remote.

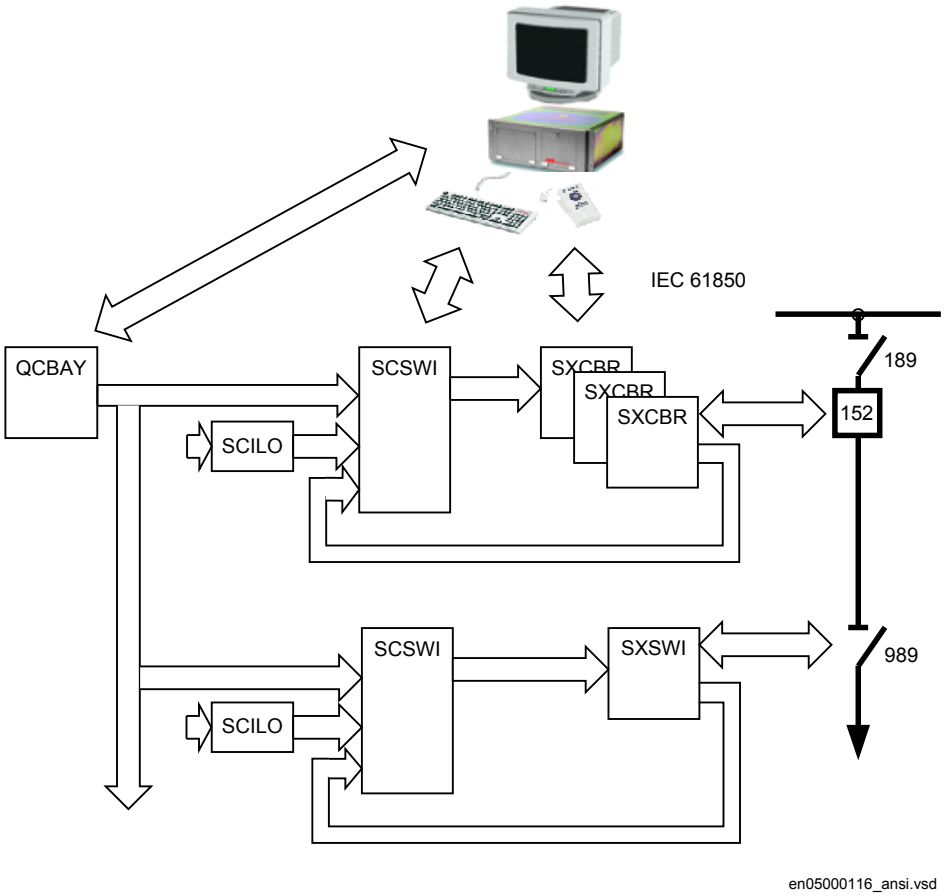

Figure 247: Signal flow between apparatus control function blocks

The IEC 61850 communication has always priority over binary inputs, e.g. a block command on binary inputs will not prevent commands over IEC 61850.

Switch controller (SCSWI)

SCSWI may handle and operate on one three-phase device or three one-phase switching devices.

After the selection of an apparatus and before the execution, the switch controller performs the following checks and actions:

- A request initiates to reserve other bays to prevent simultaneous operation.
- Actual position inputs for interlocking information are read and evaluated if the operation is permitted.
- The synchronism check/synchronizing conditions are read and checked, and performs operation upon positive response.
- The blocking conditions are evaluated
- The position indications are evaluated according to given command and its requested direction (open or closed).

The command sequence is supervised regarding the time between:

- Select and execute.
- Select and until the reservation is granted.
- Execute and the final end position of the apparatus.
- Execute and valid close conditions from the synchronism check.

At error the command sequence is cancelled.

In the case when there are three one-phase switches (SXCBR) connected to the switch controller function, the switch controller will "merge" the position of the three switches to the resulting three-phase position. In case of a pole discrepancy situation, that is, the positions of the one-phase switches are not equal for a time longer than a settable time; an error signal will be given.

The switch controller is not dependent on the type of switching device SXCBR or SXSWI. The switch controller represents the content of the SCSWI logical node (according to IEC 61850) with mandatory functionality.

Switch (SXCBR/SXSWI)

The Switch is a function used to close and interrupt an ac power circuit under normal conditions, or to interrupt the circuit under fault, or emergency conditions. The intention with this function is to represent the lowest level of a power-switching device with or without short circuit breaking capability, for example, circuit breakers, disconnectors, grounding switches etc.

The purpose of this function is to provide the actual status of positions and to perform the control operations, that is, pass all the commands to the primary apparatus via output boards and to supervise the switching operation and position.

The Switch has this functionality:

- Local/Remote switch intended for the switchyard
- Block/deblock for open/close command respectively
- Update block/deblock of position indication
- Substitution of position indication

- Supervision timer that the primary device starts moving after a command
- Supervision of allowed time for intermediate position
- Definition of pulse duration for open/close command respectively

The realization of this function is performed with SXCBR representing a circuit breaker and with SXSWI representing a circuit switch that is, a disconnector or an grounding switch.

The Circuit breaker (SXCBR) can be realized either as three one-phase switches or as one three-phase switch.

The content of this function is represented by the IEC 61850 definitions for the logical nodes Circuit breaker (SXCBR) and Circuit switch (SXSWI) with mandatory functionality.

Reservation function (QCRSV/RESIN)

The purpose of the reservation function is primarily to transfer interlocking information between IEDs in a safe way and to prevent double operation in a bay, switchyard part, or complete substation.

For interlocking evaluation in a substation, the position information from switching devices, such as circuit breakers, disconnectors and grounding switches can be required from the same bay or from several other bays. When information is needed from other bays, it is exchanged over the serial station bus between the distributed IEDs. The problem that arises, even at a high speed of communication, is a space of time during which the information about the position of the switching devices are uncertain. The interlocking function uses this information for evaluation, which means that also the interlocking conditions will be uncertain.

To ensure that the interlocking information is correct at the time of operation, a unique reservation method is available in the IEDs. With this reservation method the operation will temporarily be blocked for all switching devices in other bays, which switching states are used for evaluation of permission to operate. Actual position indications from these bays are then transferred over the serial bus for evaluation in the IED. After the evaluation the operation can be executed with high security.

This functionality is realized over the station bus by means of the function blocks QCRSV and RESIN. The application principle appears from figure 248.

The function block QCRSV handles the reservation. It sends out either the reservation request to other bays or the acknowledgement if the bay has received a request from another bay.

The other function block RESIN receives the reservation information from other bays. The number of instances is the same as the number of involved bays (up to 60 instances are available). The received signals are either the request for reservation from

another bay or the acknowledgment from each bay respectively, which have received a request from this bay. Also the information of valid transmission over the station bus must be received.

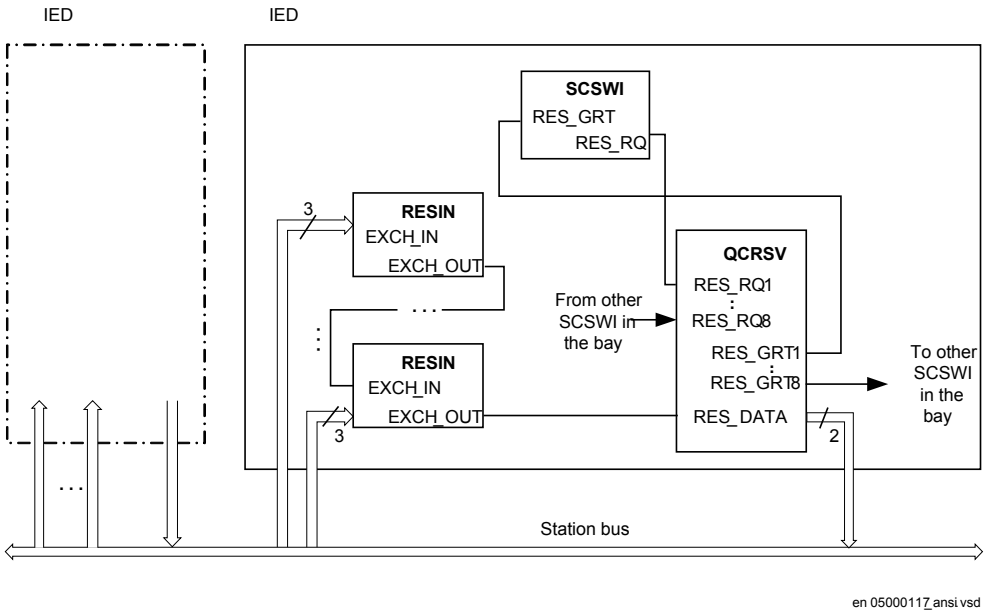

Figure 248: Application principles for reservation over the station bus

The reservation can also be realized with external wiring according to the application example in figure 249. This solution is realized with external auxiliary relays and extra binary inputs and outputs in each IED, but without use of function blocks QCRSV and RESIN.

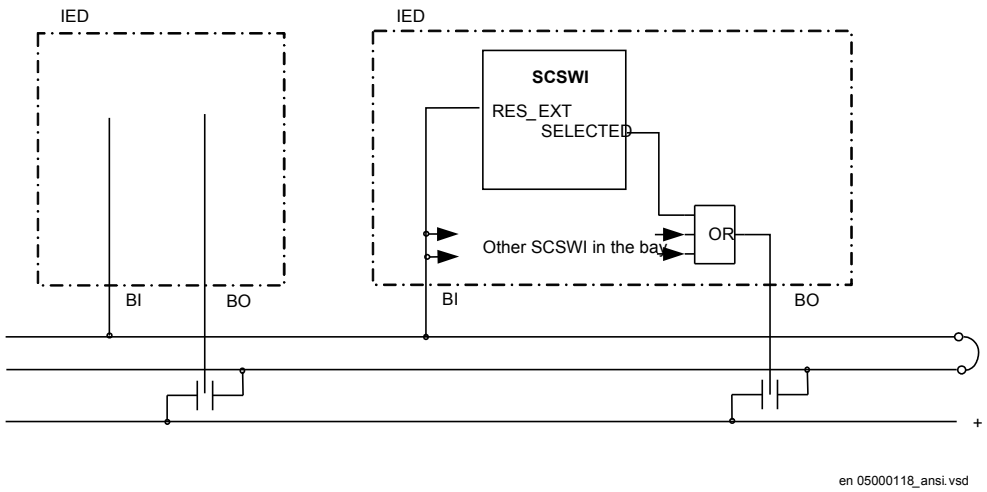

Figure 249: Application principles for reservation with external wiring

The solution in figure 249 can also be realized over the station bus according to the application example in figure 250. The solutions in figure 249 and figure 250 do not have the same high security compared to the solution in figure 248, but have instead a higher availability. This because no acknowledgment is required.

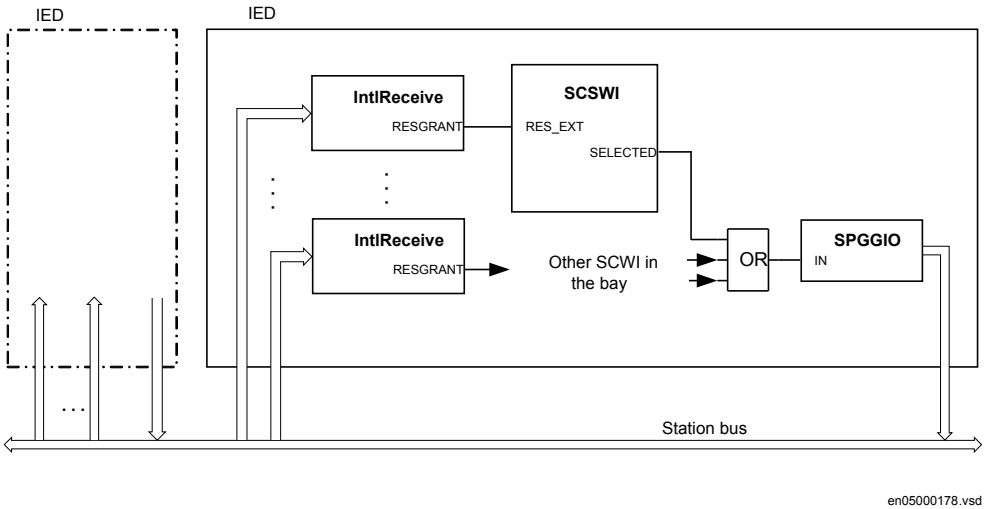

Figure 250: Application principle for an alternative reservation solution

3.12.3.2 Interaction between modules

A typical bay with apparatus control function consists of a combination of logical nodes or functions that are described here:

- The Switch controller (SCSWI) initializes all operations for one apparatus and performs the actual switching and is more or less the interface to the drive of one apparatus. It includes the position handling as well as the control of the position.
- The Circuit breaker (SXCBR) is the process interface to the circuit breaker for the apparatus control function.
- The Circuit switch (SXSWI) is the process interface to the disconnector or the grounding switch for the apparatus control function.
- The Bay control (QCBAY) fulfils the bay-level functions for the apparatuses, such as operator place selection and blockings for the complete bay.
- The Reservation (QCRSV) deals with the reservation function.
- The Four step residual overcurrent protection (EF4PTOC, 51N/67N) trips the breaker in case of Distance protection zones (ZMQPDIS, 21).
- The Protection trip logic (SMPPTRC, 94) connects the "trip" outputs of one or more protection functions to a common "trip" to be transmitted to SXCBR.
- The Autorecloser (SMBRREC, 79) consists of the facilities to automatically close a tripped breaker with respect to a number of configurable conditions.

- The logical node Interlocking (SCILO, 3) provides the information to SCSWI whether it is permitted to operate due to the switchyard topology. The interlocking conditions are evaluated with separate logic and connected to SCILO (3).
- The Synchronism, energizing check, and synchronizing (SESRSYN, 25) calculates and compares the voltage phasor difference from both sides of an open breaker with predefined switching conditions (synchronism check). Also the case that one side is dead (energizing-check) is included.
- The logical node Generic Automatic Process Control, GAPC, is an automatic function that reduces the interaction between the operator and the system. With one command, the operator can start a sequence that will end with a connection of a process object (for example a line) to one of the possible busbars.

The overview of the interaction between these functions is shown in figure 251 below.

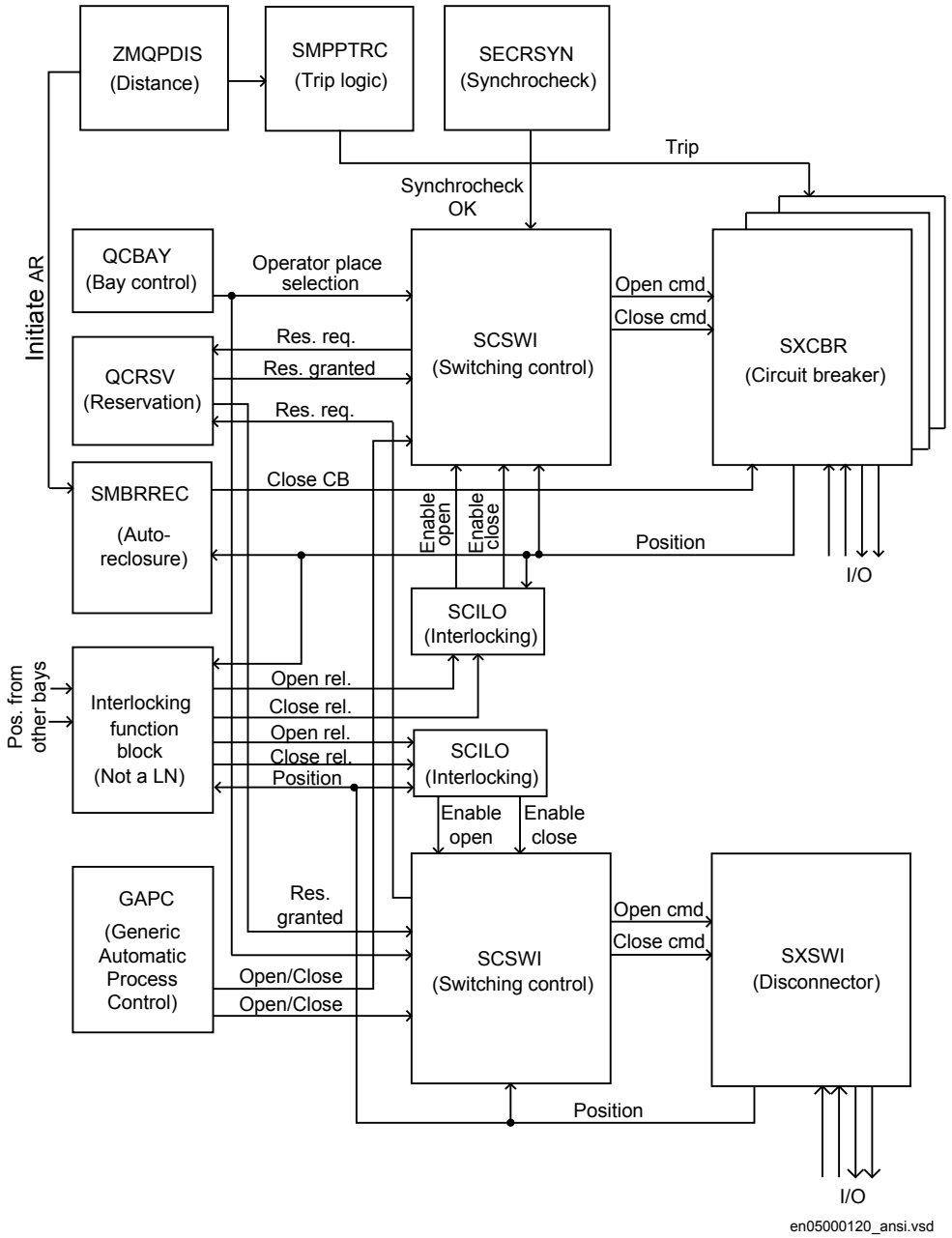

Figure 251: Example overview of the interactions between functions in a typical bay

3.12.3.3 Setting guidelines

The setting parameters for the apparatus control function are set via the local HMI or PCM600.

Switch controller (SCSWI)

The parameter *CtlModel* specifies the type of control model according to IEC 61850. For normal control of circuit breakers, disconnectors and grounding switches the control model is set to *SBO Enh* (Select-Before-Operate) with enhanced security.

When the operation shall be performed in one step, the model direct control with normal security is used.

At control with enhanced security there is an additional supervision of the status value by the control object, which means that each command sequence must be terminated by a termination command.

The parameter *PosDependent* gives permission to operate depending on the position indication, that is, at *Always permitted* it is always permitted to operate independent of the value of the position. At *Not perm at 00/11* it is not permitted to operate if the position is in bad or intermediate state.

tSelect is the maximum time between the select and the execute command signal, that is, the time the operator has to perform the command execution after the selection of the object to operate. When the time has expired, the selected output signal is set to false and a cause-code is given over IEC 61850.

The time parameter *tResResponse* is the allowed time from reservation request to the feedback reservation granted from all bays involved in the reservation function. When the time has expired, the control function is reset.

tSynchrocheck is the allowed time for the synchronism check function to fulfill the close conditions. When the time has expired, the control function is reset.

The timer *tSynchronizing* supervises that the signal synchronizing in progress is obtained in SCSWI after start of the synchronizing function. The start signal for the synchronizing is obtained if the synchronism check conditions are not fulfilled. When the time has expired, the control function is reset. If no synchronizing function is included, the time is set to 0, which means no start of the synchronizing function.

tExecutionFB is the maximum time between the execute command signal and the command termination. When the time has expired, the control function is reset.

tPoleDiscord is the allowed time to have discrepancy between the poles at control of three single-phase breakers. At discrepancy an output signal is activated to be used for trip or alarm.

Switch (SXCBR/SXSWI)

tStartMove is the supervision time for the apparatus to start moving after a command execution. When the time has expired, the switch function is reset.

During the *tIntermediate* time the position indication is allowed to be in an intermediate (00) state. When the time has expired, the switch function is reset. The indication of the mid-position at SCSWI is suppressed during this time period when the position changes from open to close or vice-versa.

If the parameter *AdaptivePulse* is set to *Adaptive* the command output pulse resets when a new correct end position is reached. If the parameter is set to *Not adaptive* the command output pulse remains active until the timer *tOpenPulsetClosePulse* has elapsed.

tOpenPulse is the output pulse length for an open command. The default length is set to 200 ms for a circuit breaker (SXCBR) and 500 ms for a disconnector (SXSWI).

tClosePulse is the output pulse length for a close command. The default length is set to 200 ms for a circuit breaker (SXCBR) and 500 ms for a disconnector (SXSWI).

SuppressMidPos when *Enabled* will suppress the mid-position during the time *tIntermediate*.

Bay Reserve (QCRSV)

The timer *tCancelRes* defines the supervision time for canceling the reservation, when this cannot be done by requesting bay due to for example communication failure.

When the parameter *ParamRequestx* (*x*=1-8) is set to *Only own bay res.* individually for each apparatus (x) in the bay, only the own bay is reserved, that is, the output for reservation request of other bays (RES_BAYS) will not be activated at selection of apparatus x.

Reservation input (RESIN)

With the *FutureUse* parameter set to *Bay future use* the function can handle bays not yet installed in the SA system.

3.12.3.4 Setting parameters

Table 154: SCSWI Non group settings (basic)

Name	Values (Range)	Unit	Step	Default	Description
CtlModel	Dir Norm SBO Enh	-	-	SBO Enh	Specifies control model type
PosDependent	Always permitted Not perm at 00/11	-	-	Always permitted	Permission to operate depending on the position
tSelect	0.00 - 600.00	s	0.01	30.00	Maximum time between select and execute signals
tResResponse	0.000 - 60.000	s	0.001	5.000	Allowed time from reservation request to reservation granted
tSynchrocheck	0.00 - 600.00	s	0.01	10.00	Allowed time for synchronism-check to fulfil close conditions

Table continues on next page

Name	Values (Range)	Unit	Step	Default	Description
tSynchronizing	0.00 - 600.00	s	0.01	0.00	Supervision time to get the signal synchronizing in progress
tExecutionFB	0.00 - 600.00	s	0.01	30.00	Maximum time from command execution to termination
tPoleDiscord	0.000 - 60.000	s	0.001	2.000	Allowed time to have discrepancy between the poles

Table 155: SXCBR Non group settings (basic)

Name	Values (Range)	Unit	Step	Default	Description
tStartMove	0.000 - 60.000	s	0.001	0.100	Supervision time for the apparatus to move after a command
tIntermediate	0.000 - 60.000	s	0.001	0.150	Allowed time for intermediate position
AdaptivePulse	Not adaptive Adaptive	-	-	Not adaptive	Output resets when a new correct end position is reached
tOpenPulse	0.000 - 60.000	s	0.001	0.200	Output pulse length for open command
tClosePulse	0.000 - 60.000	s	0.001	0.200	Output pulse length for close command
SuppressMidPos	Disabled Enabled	-	-	Enabled	Mid-position is suppressed during the time tIntermediate

Table 156: SXSWI Non group settings (basic)

Name	Values (Range)	Unit	Step	Default	Description
tStartMove	0.000 - 60.000	s	0.001	3.000	Supervision time for the apparatus to move after a command
tIntermediate	0.000 - 60.000	s	0.001	15.000	Allowed time for intermediate position
AdaptivePulse	Not adaptive Adaptive	-	-	Not adaptive	Output resets when a new correct end position is reached
tOpenPulse	0.000 - 60.000	s	0.001	0.200	Output pulse length for open command
tClosePulse	0.000 - 60.000	s	0.001	0.200	Output pulse length for close command
SwitchType	Load Break Disconnector Grounding Switch HS Groundg. Switch	-	-	Disconnector	1=LoadBreak,2=Disconnector,3=EarthSw, 4=HighSpeedEarthSw
SuppressMidPos	Disabled Enabled	-	-	Enabled	Mid-position is suppressed during the time tIntermediate

Table 157: QCRSV Non group settings (basic)

Name	Values (Range)	Unit	Step	Default	Description
tCancelRes	0.000 - 60.000	s	0.001	10.000	Supervision time for canceling the reservation
ParamRequest1	Other bays res. Only own bay res.	-	-	Only own bay res.	Reservation of the own bay only, at selection of apparatus 1
ParamRequest2	Other bays res. Only own bay res.	-	-	Only own bay res.	Reservation of the own bay only, at selection of apparatus 2
ParamRequest3	Other bays res. Only own bay res.	-	-	Only own bay res.	Reservation of the own bay only, at selection of apparatus 3
ParamRequest4	Other bays res. Only own bay res.	-	-	Only own bay res.	Reservation of the own bay only, at selection of apparatus 4
ParamRequest5	Other bays res. Only own bay res.	-	-	Only own bay res.	Reservation of the own bay only, at selection of apparatus 5
ParamRequest6	Other bays res. Only own bay res.	-	-	Only own bay res.	Reservation of the own bay only, at selection of apparatus 6
ParamRequest7	Other bays res. Only own bay res.	-	-	Only own bay res.	Reservation of the own bay only, at selection of apparatus 7
ParamRequest8	Other bays res. Only own bay res.	-	-	Only own bay res.	Reservation of the own bay only, at selection of apparatus 8

Table 158: RESIN1 Non group settings (basic)

Name	Values (Range)	Unit	Step	Default	Description
FutureUse	Bay in use Bay future use	-	-	Bay in use	The bay for this ResIn block is for future use

Table 159: RESIN2 Non group settings (basic)

Name	Values (Range)	Unit	Step	Default	Description
FutureUse	Bay in use Bay future use	-	-	Bay in use	The bay for this ResIn block is for future use

3.12.4 Interlocking (3)

The main purpose of switchgear interlocking is:

- To avoid the dangerous or damaging operation of switchgear
- To enforce restrictions on the operation of the substation for other reasons for example, load configuration. Examples of the latter are to limit the number of parallel transformers to a maximum of two or to ensure that energizing is always from one side, for example, the high voltage side of a transformer.

This section only deals with the first point, and only with restrictions caused by switching devices other than the one to be controlled. This means that switch interlock, because of device alarms, is not included in this section.

Disconnectors and grounding switches have a limited switching capacity. Disconnectors may therefore only operate:

- With basically zero current. The circuit is open on one side and has a small extension. The capacitive current is small (for example, < 5A) and power transformers with inrush current are not allowed.
- To connect or disconnect a parallel circuit carrying load current. The switching voltage across the open contacts is thus virtually zero, thanks to the parallel circuit (for example, < 1% of rated voltage). Paralleling of power transformers is not allowed.

Grounding switches are allowed to connect and disconnect grounding of isolated points. Due to capacitive or inductive coupling there may be some voltage (for example < 40% of rated voltage) before grounding and some current (for example < 100A) after grounding of a line.

Circuit breakers are usually not interlocked. Closing is only interlocked against running disconnectors in the same bay, and the bus-coupler opening is interlocked during a busbar transfer.

The positions of all switching devices in a bay and from some other bays determine the conditions for operational interlocking. Conditions from other stations are usually not available. Therefore, a line grounding switch is usually not fully interlocked. The operator must be convinced that the line is not energized from the other side before closing the grounding switch. As an option, a voltage indication can be used for interlocking. Take care to avoid a dangerous *enable* condition at the loss of a VT secondary voltage, for example, because of a blown fuse.

The switch positions used by the operational interlocking logic are obtained from auxiliary contacts or position sensors. For each end position (open or closed) a true indication is needed - thus forming a double indication. The apparatus control function continuously checks its consistency. If neither condition is high (1 or TRUE), the switch may be in an intermediate position, for example, moving. This dynamic state may continue for some time, which in the case of disconnectors may be up to 10 seconds. Should both indications stay low for a longer period, the position indication will be interpreted as *unknown*. If both indications stay high, something is wrong, and the state is again treated as *unknown*.

In both cases an alarm is sent to the operator. Indications from position sensors shall be self-checked and system faults indicated by a fault signal. In the interlocking logic, the signals are used to avoid dangerous *enable* or *release* conditions. When the switching state of a switching device cannot be determined operation is not permitted.

For switches with an individual operation gear per phase, the evaluation must consider possible phase discrepancies. This is done with the aid of an *AND-function* for all three phases in each apparatus for both open and close indications. Phase discrepancies will result in an unknown double indication state.

3.12.4.1 Configuration guidelines

The following sections describe how the interlocking for a certain switchgear configuration can be realized in the IED by using standard interlocking modules and their interconnections. They also describe the configuration settings. The inputs for delivery specific conditions (Qx_EXy) are set to 1=TRUE if they are not used, except in the following cases:

- 989_EX2 and 989_EX4 in modules BH_LINE_A and BH_LINE_B
- 152_EX3 in module AB_TRAFO

when they are set to 0=FALSE.

3.12.4.2 Interlocking for line bay ABC_LINE (3)

Application

The interlocking for line bay (ABC_LINE, 3) function is used for a line connected to a double busbar arrangement with a transfer busbar according to figure 252. The function can also be used for a double busbar arrangement without transfer busbar or a single busbar arrangement with/without transfer busbar.

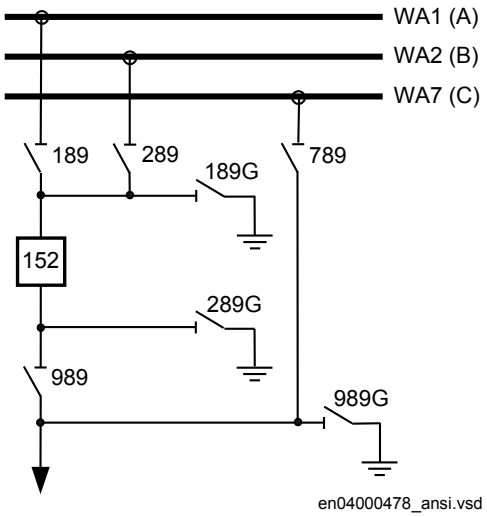

Figure 252: Switchyard layout ABC_LINE (3)

The signals from other bays connected to the module ABC_LINE (3) are described below.

Signals from bypass busbar

To derive the signals:

Signal	
BB7_D_OP	All line disconnectors on bypass WA7 except in the own bay are open.
VP_BB7_D	The switch status of disconnectors on bypass busbar WA7 are valid.
EXDU_BPB	No transmission error from any bay containing disconnectors on bypass busbar WA7

These signals from each line bay (ABC_LINE, 3) except that of the own bay are needed:

Signal	
789OPTR	789 is open
VP789TR	The switch status for 789 is valid.
EXDU_BPB	No transmission error from the bay that contains the above information.

For bay n, these conditions are valid:

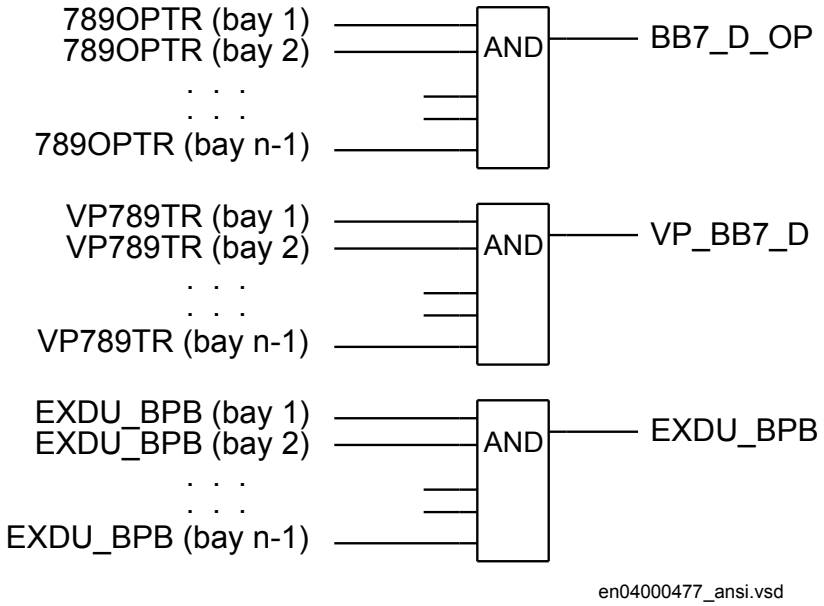

Figure 253: Signals from bypass busbar in line bay n

Signals from bus-coupler

If the busbar is divided by bus-section disconnectors into bus sections, the busbar-busbar connection could exist via the bus-section disconnector and bus-coupler within the other bus section.

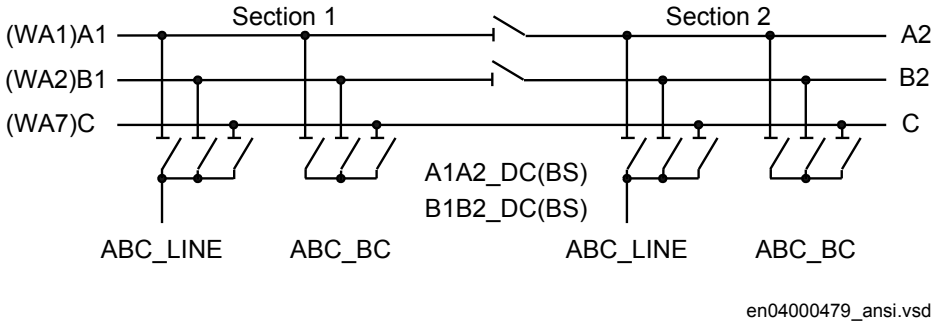

Figure 254: Busbars divided by bus-section disconnectors (circuit breakers)

To derive the signals:

Signal	
BC_12_CL	A bus-coupler connection exists between busbar WA1 and WA2.
BC_17_OP	No bus-coupler connection between busbar WA1 and WA7.
BC_17_CL	A bus-coupler connection exists between busbar WA1and WA7.
BC_27_OP	No bus-coupler connection between busbar WA2 and WA7.
BC_27_CL	A bus-coupler connection exists between busbar WA2 and WA7.
VP_BC_12	The switch status of BC_12 is valid.
VP_BC_17	The switch status of BC_17 is valid.
VP_BC_27	The switch status of BC_27 is valid.
EXDU_BC	No transmission error from any bus-coupler bay (BC).

These signals from each bus-coupler bay (ABC_BC) are needed:

Signal	
BC12CLTR	A bus-coupler connection through the own bus-coupler exists between busbar WA1 and WA2.
BC17OPTR	No bus-coupler connection through the own bus-coupler between busbar WA1 and WA7.
BC17CLTR	A bus-coupler connection through the own bus-coupler exists between busbar WA1 and WA7.
BC27OPTR	No bus-coupler connection through the own bus-coupler between busbar WA2 and WA7.

Table continues on next page

Signal	
BC27CLTR	A bus-coupler connection through the own bus-coupler exists between busbar WA2 and WA7.
VPBC12TR	The switch status of BC_12 is valid.
VPBC17TR	The switch status of BC_17 is valid.
VPBC27TR	The switch status of BC_27 is valid.
EXDU_BC	No transmission error from the bay that contains the above information.

These signals from each bus-section disconnector bay (A1A2_DC) are also needed. For B1B2_DC, corresponding signals from busbar B are used. The same type of module (A1A2_DC) is used for different busbars, that is, for both bus-section disconnector A1A2_DC and B1B2_DC.

Signal	
DCOPTR	The bus-section disconnector is open.
DCCLTR	The bus-section disconnector is closed.
VPDCTR	The switch status of bus-section disconnector DC is valid.
EXDU_DC	No transmission error from the bay that contains the above information.

If the busbar is divided by bus-section circuit breakers, the signals from the bus-section coupler bay (A1A2_BS), rather than the bus-section disconnector bay (A1A2_DC) must be used. For B1B2_BS, corresponding signals from busbar B are used. The same type of module (A1A2_BS) is used for different busbars, that is, for both bus-section circuit breakers A1A2_BS and B1B2_BS.

Signal	
S1S2OPTR	No bus-section coupler connection between bus-sections 1 and 2.
S1S2CLTR	A bus-section coupler connection exists between bus-sections 1 and 2.
VPS1S2TR	The switch status of bus-section coupler BS is valid.
EXDU_BS	No transmission error from the bay that contains the above information.

For a line bay in section 1, these conditions are valid:

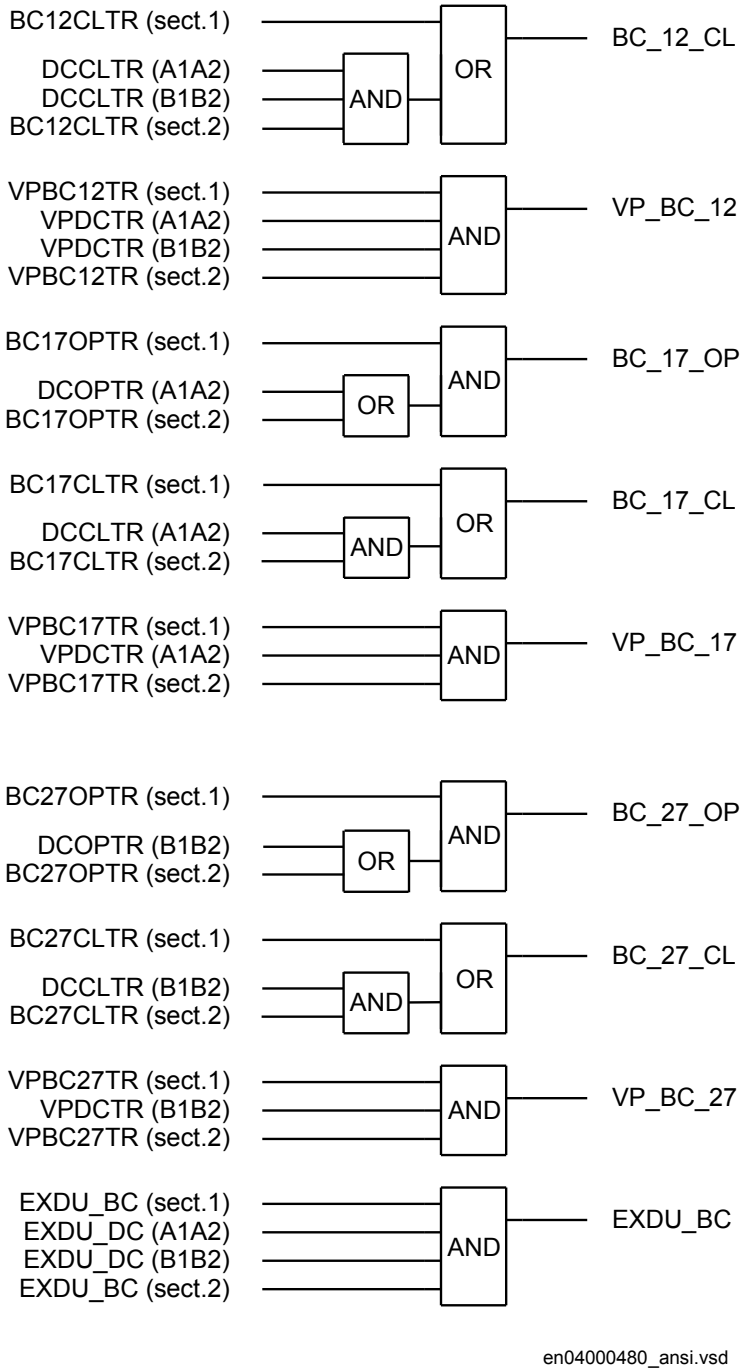

Figure 255: Signals to a line bay in section 1 from the bus-coupler bays in each section

For a line bay in section 2, the same conditions as above are valid by changing section 1 to section 2 and vice versa.

Configuration setting

If there is no bypass busbar and therefore no 789 disconnector, then the interlocking for 789 is not used. The states for 789, 7189G, BB7_D, BC_17, BC_27 are set to open by setting the appropriate module inputs as follows. In the functional block diagram, 0 and 1 are designated 0=FALSE and 1=TRUE:

- 789_OP = 1
- 789_CL = 0

- 7189G_OP = 1
- 7189G_CL = 0

- BB7_D_OP = 1

- BC_17_OP = 1
- BC_17_CL = 0
- BC_27_OP = 1
- BC_27_CL = 0

- EXDU_BPB = 1

- VP_BB7_D = 1
- VP_BC_17 = 1
- VP_BC_27 = 1

If there is no second busbar WA2 and therefore no 289 disconnector, then the interlocking for 289 is not used. The state for 289, 2189G, BC_12, BC_27 are set to open by setting the appropriate module inputs as follows. In the functional block diagram, 0 and 1 are designated 0=FALSE and 1=TRUE:

- 289_OP = 1
- 289_CL = 0

- 2189G_OP = 1
- 2189G_CL = 0

- BC_12_CL = 0
- BC_27_OP = 1
- BC_27_CL = 0

- VP_BC_12 = 1

3.12.4.3 Interlocking for bus-coupler bay ABC_BC (3)

Application

The interlocking for bus-coupler bay (ABC_BC, 3) function is used for a bus-coupler bay connected to a double busbar arrangement according to figure 256. The function can also be used for a single busbar arrangement with transfer busbar or double busbar arrangement without transfer busbar.

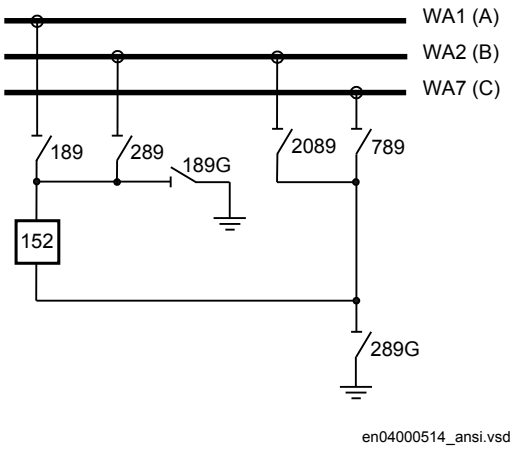

Figure 256: Switchyard layout ABC_BC (3)

Configuration

The signals from the other bays connected to the bus-coupler module ABC_BC are described below.

Signals from all feeders

To derive the signals:

Signal	
BBTR_OP	No busbar transfer is in progress concerning this bus-coupler.
VP_BBTR	The switch status is valid for all apparatuses involved in the busbar transfer.
EXDU_12	No transmission error from any bay connected to the WA1/WA2 busbars.

These signals from each line bay (ABC_LINE), each transformer bay (AB_TRAFO), and bus-coupler bay (ABC_BC), except the own bus-coupler bay are needed:

Signal	
Q1289OPTR	189 or 289 or both are open.
VP1289TR	The switch status of 189 and 289 are valid.
EXDU_12	No transmission error from the bay that contains the above information.

For bus-coupler bay n, these conditions are valid:

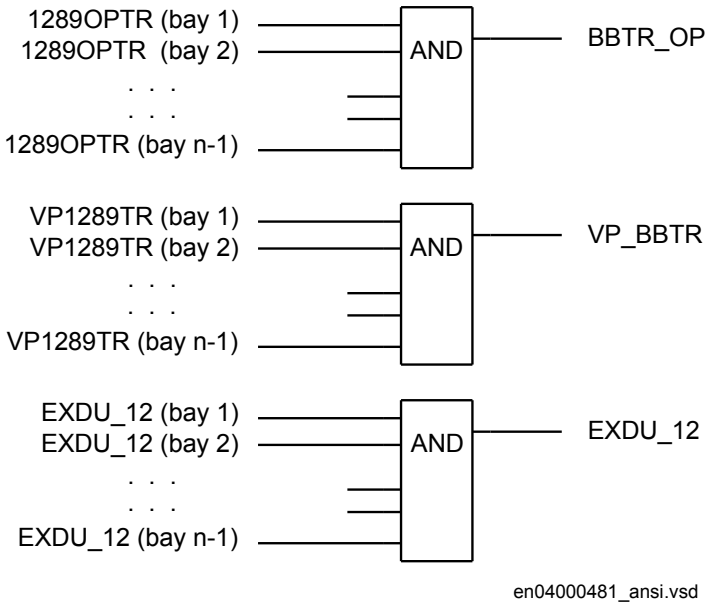

Figure 257: Signals from any bays in bus-coupler bay n

If the busbar is divided by bus-section disconnectors into bus-sections, the signals BBTR are connected in parallel - if both bus-section disconnectors are closed. So for the basic project-specific logic for BBTR above, add this logic:

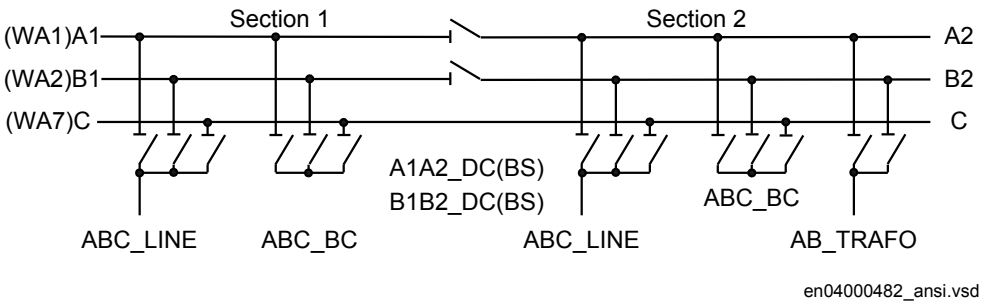

Figure 258: Busbars divided by bus-section disconnectors (circuit breakers)

The following signals from each bus-section disconnector bay (A1A2_DC) are needed. For B1B2_DC, corresponding signals from busbar B are used. The same type of module (A1A2_DC) is used for different busbars, that is, for both bus-section disconnector A1A2_DC and B1B2_DC.

Signal	
DCOPTR	The bus-section disconnector is open.
VPDCTR	The switch status of bus-section disconnector DC is valid.
EXDU_DC	No transmission error from the bay that contains the above information.

If the busbar is divided by bus-section circuit breakers, the signals from the bus-section coupler bay (A1A2_BS), rather than the bus-section disconnector bay (A1A2_DC), have to be used. For B1B2_BS, corresponding signals from busbar B are used. The same type of module (A1A2_BS) is used for different busbars, that is, for both bus-section circuit breakers A1A2_BS and B1B2_BS.

Signal	
S1S2OPTR	No bus-section coupler connection between bus-sections 1 and 2.
VPS1S2TR	The switch status of bus-section coupler BS is valid.
EXDU_BS	No transmission error from the bay that contains the above information.

For a bus-coupler bay in section 1, these conditions are valid:

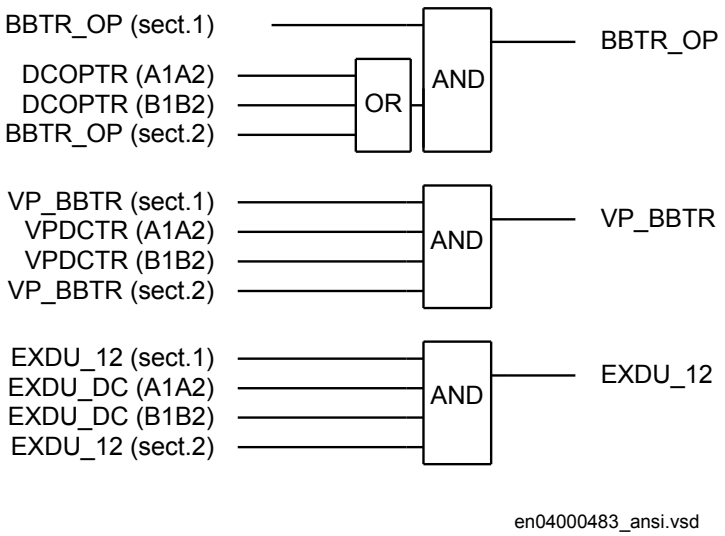

Figure 259: Signals to a bus-coupler bay in section 1 from any bays in each section

For a bus-coupler bay in section 2, the same conditions as above are valid by changing section 1 to section 2 and vice versa.

Signals from bus-coupler

If the busbar is divided by bus-section disconnectors into bus-sections, the signals BC_12 from the busbar coupler of the other busbar section must be transmitted to the own busbar coupler if both disconnectors are closed.

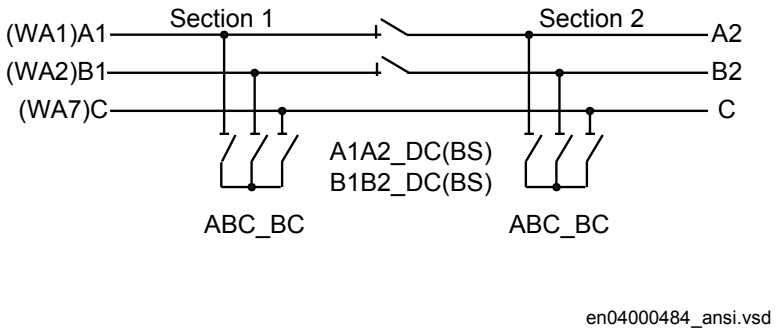

Figure 260: Busbars divided by bus-section disconnectors (circuit breakers)

To derive the signals:

Signal	
BC_12_CL	Another bus-coupler connection exists between busbar WA1 and WA2.
VP_BC_12	The switch status of BC_12 is valid.
EXDU_BC	No transmission error from any bus-coupler bay (BC).

These signals from each bus-coupler bay (ABC_BC), except the own bay, are needed:

Signal	
BC12CLTR	A bus-coupler connection through the own bus-coupler exists between busbar WA1 and WA2.
VPBC12TR	The switch status of BC_12 is valid.
EXDU_BC	No transmission error from the bay that contains the above information.

These signals from each bus-section disconnector bay (A1A2_DC) are also needed. For B1B2_DC, corresponding signals from busbar B are used. The same type of module (A1A2_DC) is used for different busbars, that is, for both bus-section disconnector A1A2_DC and B1B2_DC.

Signal	
DCCLTR	The bus-section disconnector is closed.
VPDCTR	The switch status of bus-section disconnector DC is valid.
EXDU_DC	No transmission error from the bay that contains the above information.

If the busbar is divided by bus-section circuit breakers, the signals from the bus-section coupler bay (A1A2_BS), rather than the bus-section disconnector bay (A1A2_DC), must be used. For B1B2_BS, corresponding signals from busbar B are used. The same type of module (A1A2_BS) is used for different busbars, that is, for both bus-section circuit breakers A1A2_BS and B1B2_BS.

Signal	
S1S2CLTR	A bus-section coupler connection exists between bus sections 1 and 2.
VPS1S2TR	The switch status of bus-section coupler BS is valid.
EXDU_BS	No transmission error from the bay containing the above information.

For a bus-coupler bay in section 1, these conditions are valid:

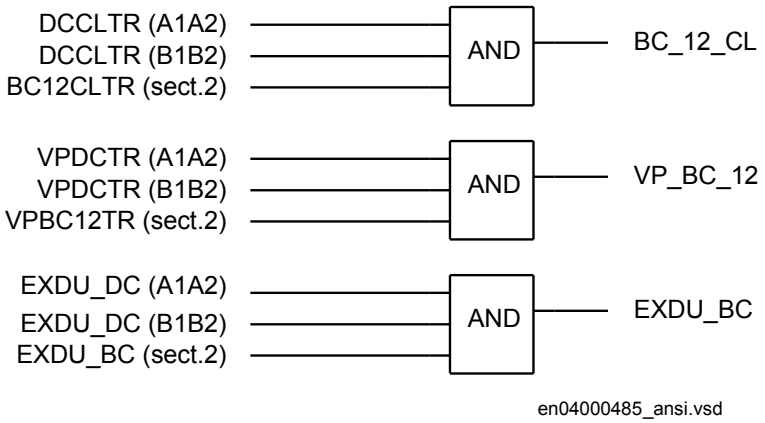

Figure 261: Signals to a bus-coupler bay in section 1 from a bus-coupler bay in another section

For a bus-coupler bay in section 2, the same conditions as above are valid by changing section 1 to section 2 and vice versa.

Configuration setting

If there is no bypass busbar and therefore no 289 and 789 disconnectors, then the interlocking for 289 and 789 is not used. The states for 289, 789, 7189G are set to open by setting the appropriate module inputs as follows. In the functional block diagram, 0 and 1 are designated 0=FALSE and 1=TRUE:

- 289_OP = 1
- 289_CL = 0

- 789_OP = 1
- 789_CL = 0

- 7189G_OP = 1
- 7189G_CL = 0

If there is no second busbar B and therefore no 289 and 2089 disconnectors, then the interlocking for 289 and 2089 are not used. The states for 289, 2089, 2189G, BC_12, BBTR are set to open by setting the appropriate module inputs as follows. In the functional block diagram, 0 and 1 are designated 0=FALSE and 1=TRUE:

- 289_OP = 1
- 289_CL = 0

- 2089_OP = 1
- 2089_CL = 0

- 2189G_OP = 1
- 2189G_CL = 0

- BC_12_CL = 0
- VP_BC_12 = 1

- BBTR_OP = 1
- VP_BBTR = 1

3.12.4.4 Interlocking for transformer bay AB_TRAFO (3)

Application

The interlocking for transformer bay (AB_TRAFO, 3) function is used for a transformer bay connected to a double busbar arrangement according to figure 262. The function is used when there is no disconnector between circuit breaker and transformer. Otherwise, the interlocking for line bay (ABC_LINE, 3) function can be used. This function can also be used in single busbar arrangements.

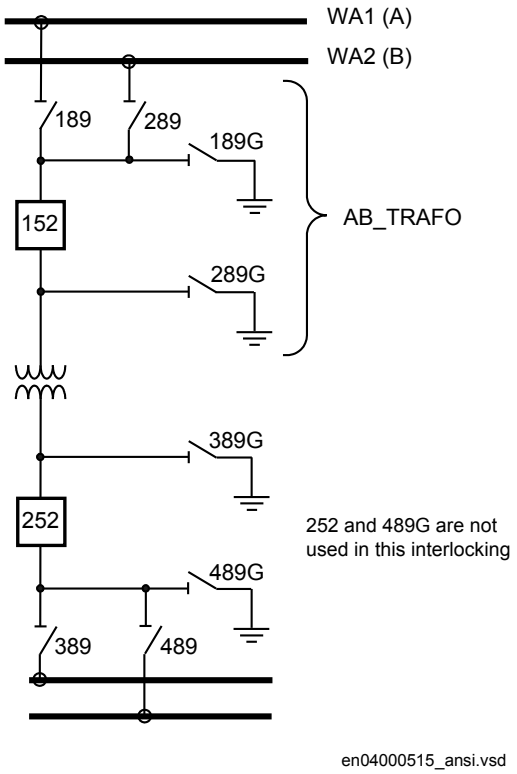

Figure 262: Switchyard layout AB_TRAFO (3)

The signals from other bays connected to the module AB_TRAFO are described below.

Signals from bus-coupler

If the busbar is divided by bus-section disconnectors into bus-sections, the busbar-busbar connection could exist via the bus-section disconnector and bus-coupler within the other bus-section.

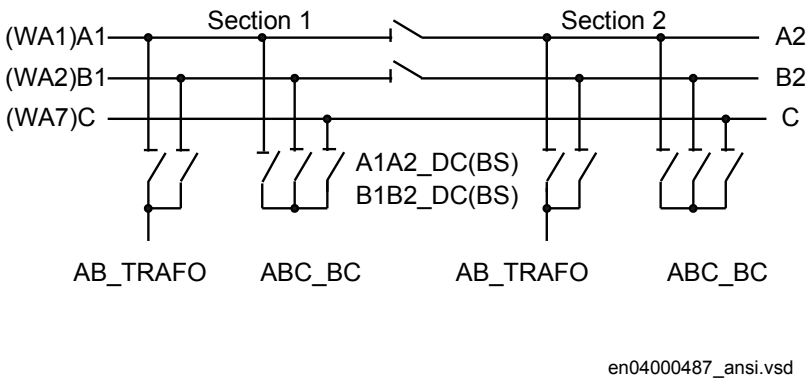

Figure 263: Busbars divided by bus-section disconnectors (circuit breakers)

The project-specific logic for input signals concerning bus-coupler are the same as the specific logic for the line bay (ABC_LINE):

Signal	
BC_12_CL	A bus-coupler connection exists between busbar WA1 and WA2.
VP_BC_12	The switch status of BC_12 is valid.
EXDU_BC	No transmission error from bus-coupler bay (BC).

The logic is identical to the double busbar configuration “Signals from bus-coupler“.

Configuration setting

If there are no second busbar B and therefore no 289 disconnector, then the interlocking for 289 is not used. The state for 289, 2189G, BC_12 are set to open by setting the appropriate module inputs as follows. In the functional block diagram, 0 and 1 are designated 0=FALSE and 1=TRUE:

- 289_OP = 1
- 289QB2_CL = 0

- 2189G_OP = 1
- 2189G_CL = 0

- BC_12_CL = 0
- VP_BC_12 = 1

If there is no second busbar B at the other side of the transformer and therefore no 489 disconnector, then the state for 489 is set to open by setting the appropriate module inputs as follows:

- 489_OP = 1
- 489_CL = 0

3.12.4.5 Interlocking for bus-section breaker A1A2_BS (3)

Application

The interlocking for bus-section breaker (A1A2_BS ,3) function is used for one bus-section circuit breaker between section 1 and 2 according to figure 264. The function can be used for different busbars, which includes a bus-section circuit breaker.

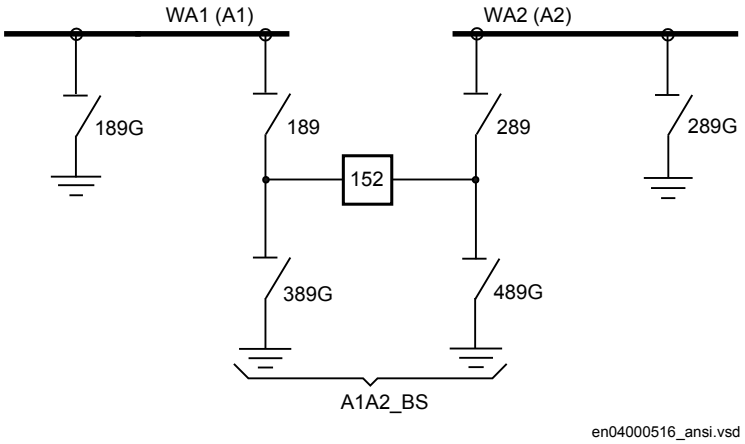

Figure 264: Switchyard layout A1A2_BS (3)

Signals from all feeders

If the busbar is divided by bus-section circuit breakers into bus-sections and both circuit breakers are closed, the opening of the circuit breaker must be blocked if a bus-coupler connection exists between busbars on one bus-section side and if on the other bus-section side a busbar transfer is in progress:

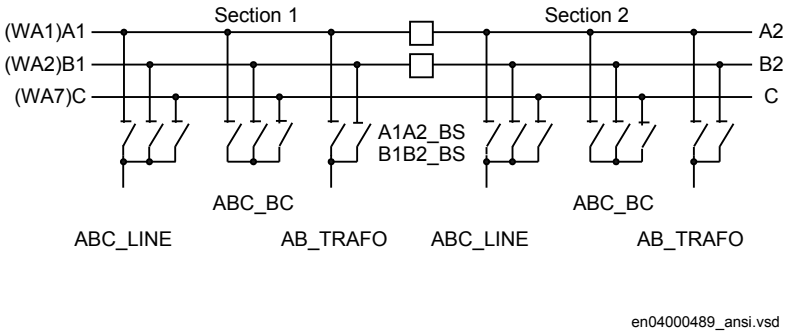

Figure 265: Busbars divided by bus-section circuit breakers

To derive the signals:

Signal	
BBTR_OP	No busbar transfer is in progress concerning this bus-section.
VP_BBTR	The switch status of BBTR is valid.
EXDU_12	No transmission error from any bay connected to busbar 1(A) and 2(B).

These signals from each line bay (ABC_LINE), each transformer bay (AB_TRAFO), and bus-coupler bay (ABC_BC) are needed:

Signal	
1289OPTR	189 or 289 or both are open.
VP1289TR	The switch status of 189 and 289 are valid.
EXDU_12	No transmission error from the bay that contains the above information.

These signals from each bus-coupler bay (ABC_BC) are needed:

Signal	
BC12OPTR	No bus-coupler connection through the own bus-coupler between busbar WA1 and WA2.
VPBC12TR	The switch status of BC_12 is valid.
EXDU_BC	No transmission error from the bay that contains the above information.

These signals from the bus-section circuit breaker bay (A1A2_BS, B1B2_BS) are needed.

Signal	
S1S2OPTR	No bus-section coupler connection between bus-sections 1 and 2.
VPS1S2TR	The switch status of bus-section coupler BS is valid.
EXDU_BS	No transmission error from the bay that contains the above information.

For a bus-section circuit breaker between A1 and A2 section busbars, these conditions are valid:

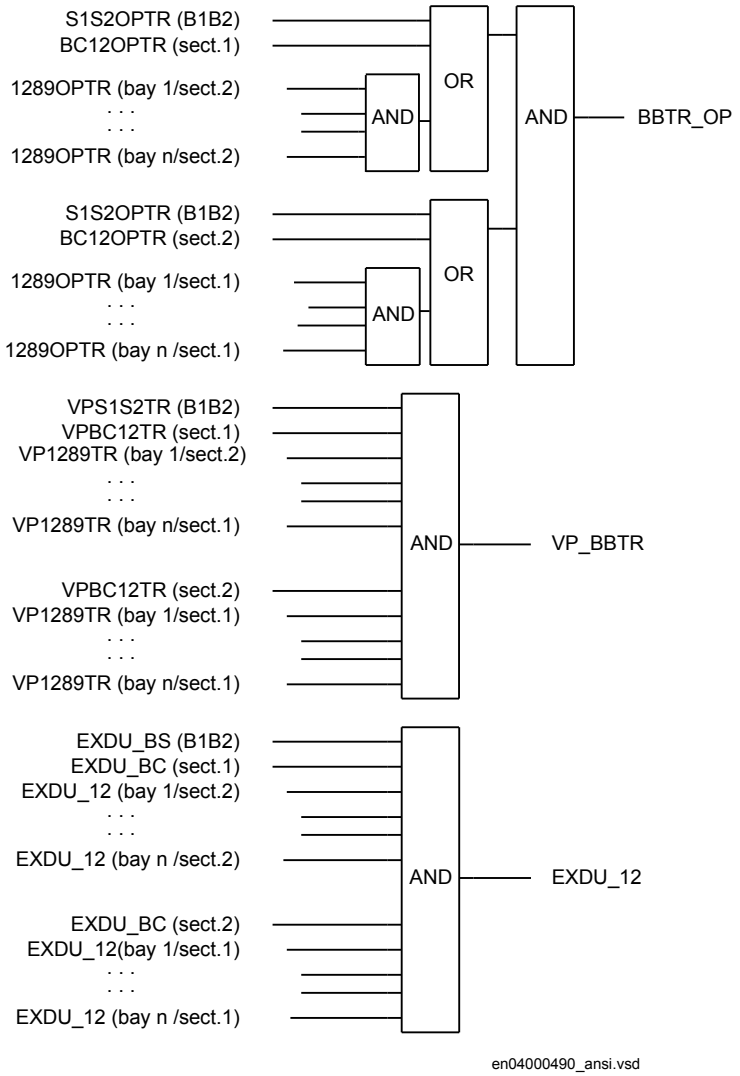

Figure 266: Signals from any bays for a bus-section circuit breaker between sections A1 and A2

For a bus-section circuit breaker between B1 and B2 section busbars, these conditions are valid:

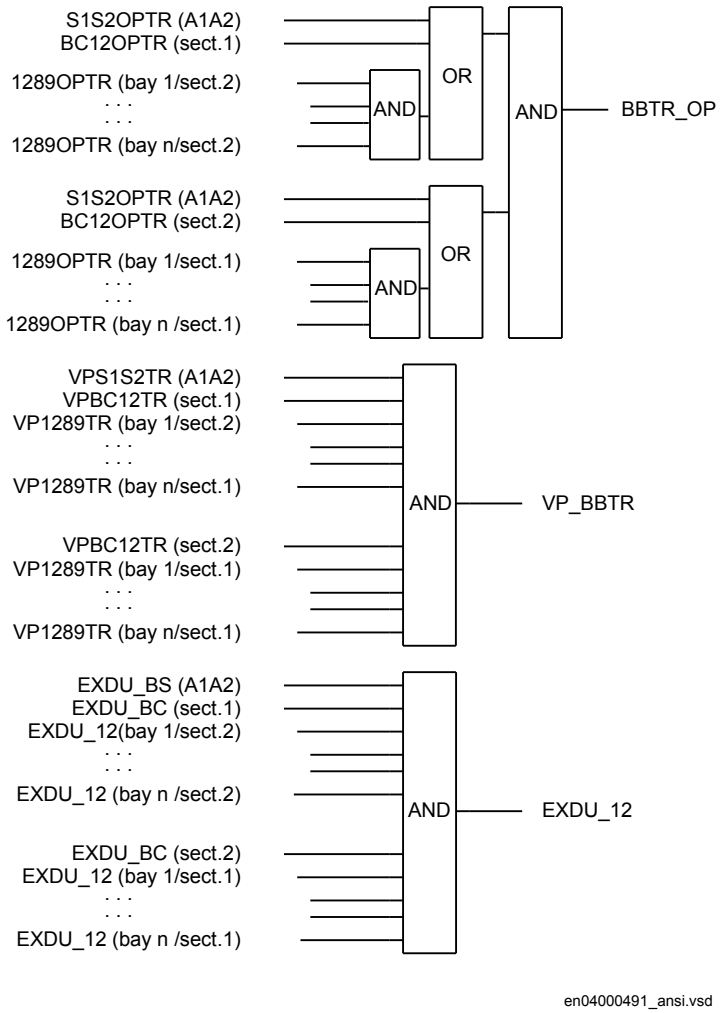

Figure 267: Signals from any bays for a bus-section circuit breaker between sections B1 and B2

Configuration setting

If there is no other busbar via the busbar loops that are possible, then either the interlocking for the 152 open circuit breaker is not used or the state for BBTR is set to open. That is, no busbar transfer is in progress in this bus-section:

- BBTR_OP = 1
- VP_BBTR = 1

3.12.4.6 Interlocking for bus-section disconnector A1A2_DC (3)

Application

The interlocking for bus-section disconnector (A1A2_DC, 3) function is used for one bus-section disconnector between section 1 and 2 according to figure 268. A1A2_DC (3) function can be used for different busbars, which includes a bus-section disconnector.

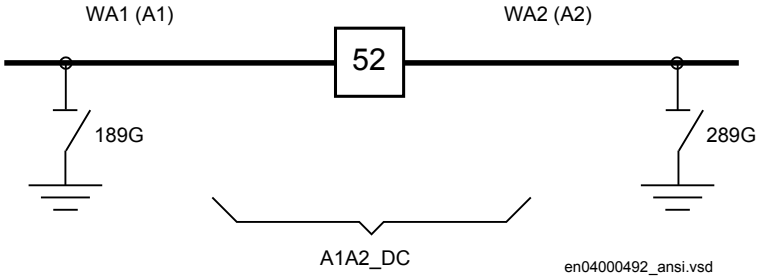

Figure 268: Switchyard layout A1A2_DC (3)

The signals from other bays connected to the module A1A2_DC are described below.

Signals in single breaker arrangement

If the busbar is divided by bus-section disconnectors, the condition *no other disconnector connected to the bus-section* must be made by a project-specific logic.

The same type of module (A1A2_DC) is used for different busbars, that is, for both bus-section disconnector A1A2_DC and B1B2_DC. But for B1B2_DC, corresponding signals from busbar B are used.

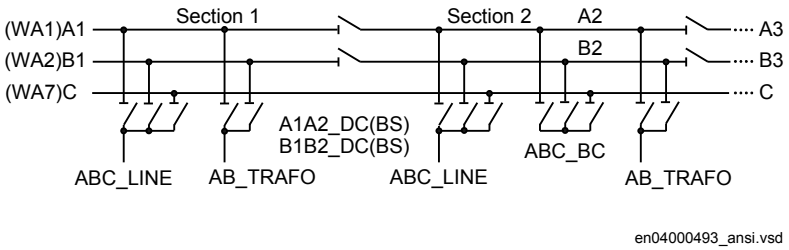

Figure 269: Busbars divided by bus-section disconnectors (circuit breakers)

To derive the signals:

Signal	
S1DC_OP	All disconnectors on bus-section 1 are open.
S2DC_OP	All disconnectors on bus-section 2 are open.
VPS1_DC	The switch status of disconnectors on bus-section 1 is valid.
VPS2_DC	The switch status of disconnectors on bus-section 2 is valid.
EXDU_BB	No transmission error from any bay that contains the above information.

These signals from each line bay (ABC_LINE), each transformer bay (AB_TRAFO), and each bus-coupler bay (ABC_BC) are needed:

Signal	
189OPTR	189 is open.
289OPTR	289 is open (AB_TRAFO, ABC_LINE).
22089OTR	289 and 2089 are open (ABC_BC).
VP189TR	The switch status of 189 is valid.
VP289TR	The switch status of 289 is valid.
V22089TR	The switch status of 289 and 2089 are valid.
EXDU_BB	No transmission error from the bay that contains the above information.

If there is an additional bus-section disconnector, the signal from the bus-section disconnector bay (A1A2_DC) must be used:

Signal	
DCOPTR	The bus-section disconnector is open.
VPDCTR	The switch status of bus-section disconnector DC is valid.
EXDU_DC	No transmission error from the bay that contains the above information.

If there is an additional bus-section circuit breaker rather than an additional bus-section disconnector the signals from the bus-section, circuit-breaker bay (A1A2_BS) rather than the bus-section disconnector bay (A1A2_DC) must be used:

Signal	
189OPTR	189 is open.
289OPTR	289 is open.
VP189TR	The switch status of 189 is valid.
VP289TR	The switch status of 289 is valid.
EXDU_BS	No transmission error from the bay BS (bus-section coupler bay) that contains the above information.

For a bus-section disconnector, these conditions from the A1 busbar section are valid:

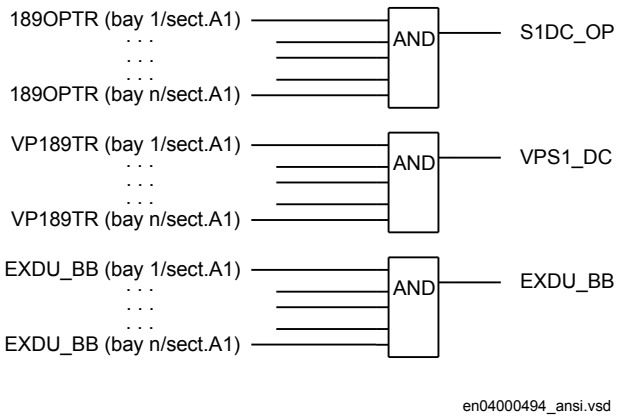

Figure 270: Signals from any bays in section A1 to a bus-section disconnector

For a bus-section disconnector, these conditions from the A2 busbar section are valid:

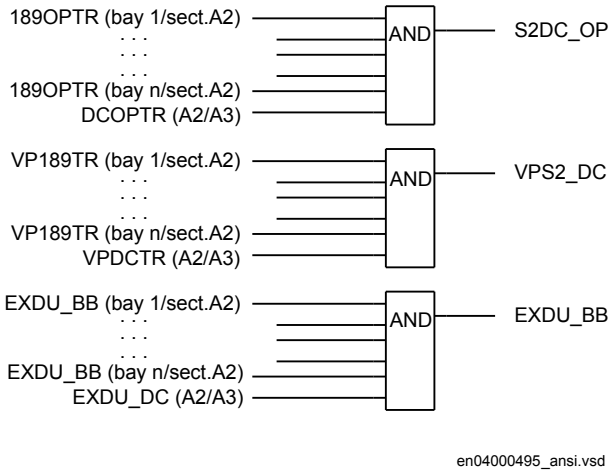

Figure 271: Signals from any bays in section A2 to a bus-section disconnector

For a bus-section disconnector, these conditions from the B1 busbar section are valid:

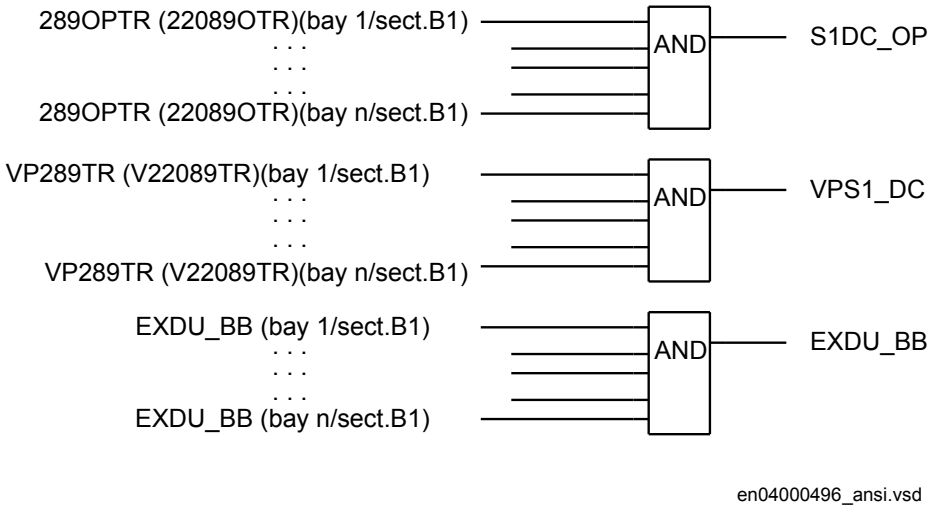

Figure 272: Signals from any bays in section B1 to a bus-section disconnector

For a bus-section disconnector, these conditions from the B2 busbar section are valid:

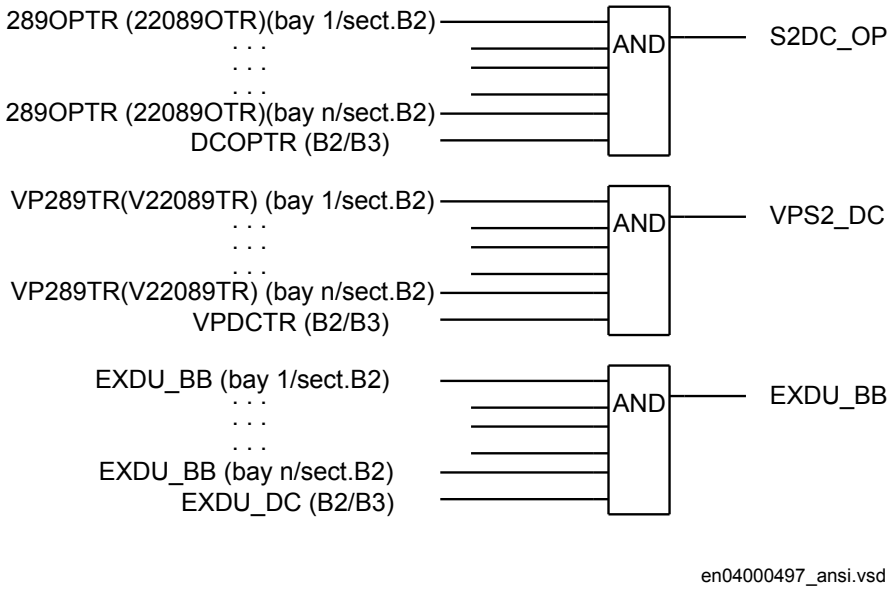

Figure 273: Signals from any bays in section B2 to a bus-section disconnector

Signals in double-breaker arrangement

If the busbar is divided by bus-section disconnectors, the condition for the busbar disconnector bay *no other disconnector connected to the bus-section* must be made by a project-specific logic.

The same type of module (A1A2_DC) is used for different busbars, that is, for both bus-section disconnector A1A2_DC and B1B2_DC. But for B1B2_DC, corresponding signals from busbar B are used.

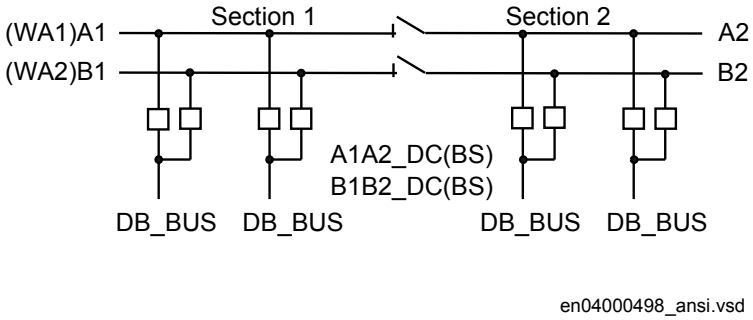

Figure 274: Busbars divided by bus-section disconnectors (circuit breakers)

To derive the signals:

Signal	
S1DC_OP	All disconnectors on bus-section 1 are open.
S2DC_OP	All disconnectors on bus-section 2 are open.
VPS1_DC	The switch status of all disconnectors on bus-section 1 is valid.
VPS2_DC	The switch status of all disconnectors on bus-section 2 is valid.
EXDU_BB	No transmission error from double-breaker bay (DB) that contains the above information.

These signals from each double-breaker bay (DB_BUS) are needed:

Signal	
189OPTR	189 is open.
289OPTR	289 is open.
VP189TR	The switch status of 189 is valid.
VP289TR	The switch status of 289 is valid.
EXDU_DB	No transmission error from the bay that contains the above information.

The logic is identical to the double busbar configuration “Signals in single breaker arrangement”.

For a bus-section disconnector, these conditions from the A1 busbar section are valid:

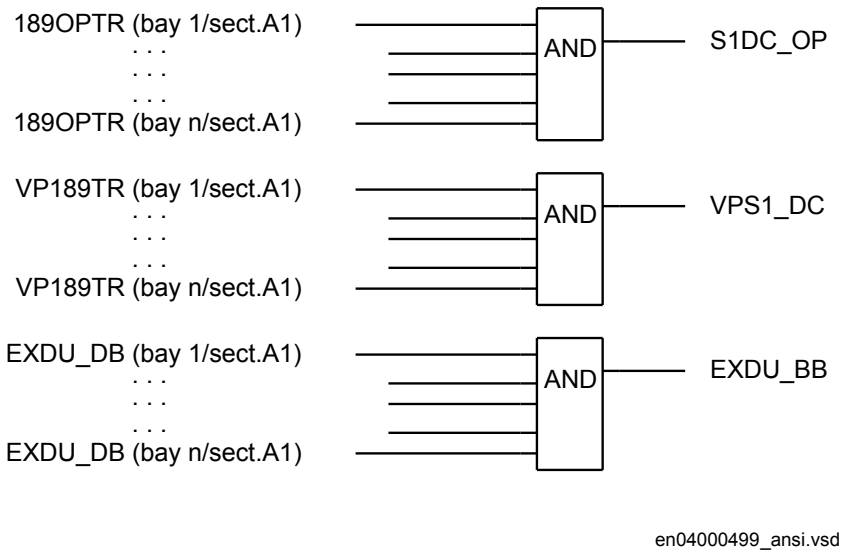

Figure 275: Signals from double-breaker bays in section A1 to a bus-section disconnector

For a bus-section disconnector, these conditions from the A2 busbar section are valid:

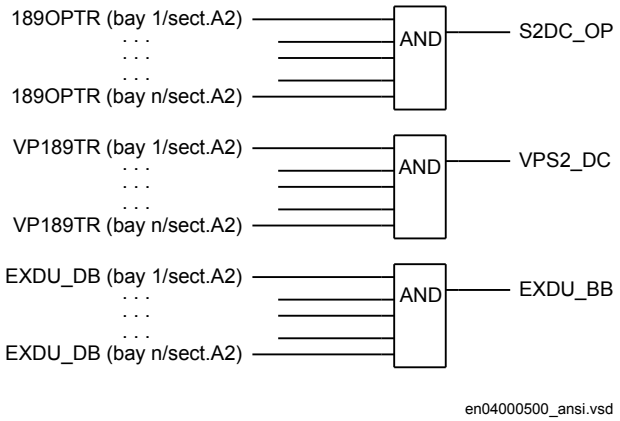

Figure 276: Signals from double-breaker bays in section A2 to a bus-section disconnector

For a bus-section disconnector, these conditions from the B1 busbar section are valid:

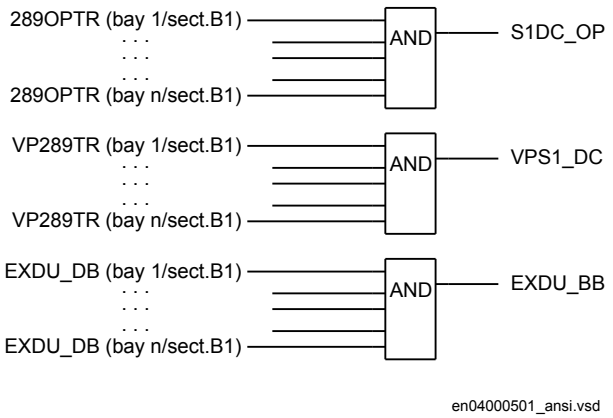

Figure 277: Signals from double-breaker bays in section B1 to a bus-section disconnector

For a bus-section disconnector, these conditions from the B2 busbar section are valid:

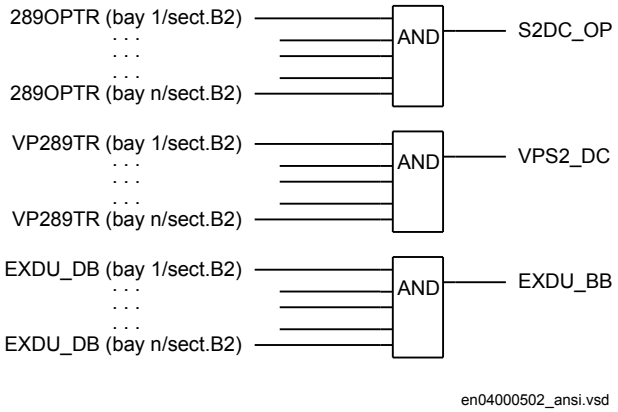

Figure 278: Signals from double-breaker bays in section B2 to a bus-section disconnector

Signals in breaker and a half arrangement

If the busbar is divided by bus-section disconnectors, the condition for the busbar disconnector bay *no other disconnector connected to the bus-section* must be made by a project-specific logic.

The same type of module (A1A2_DC) is used for different busbars, that is, for both bus-section disconnector A1A2_DC and B1B2_DC. But for B1B2_DC, corresponding signals from busbar B are used.

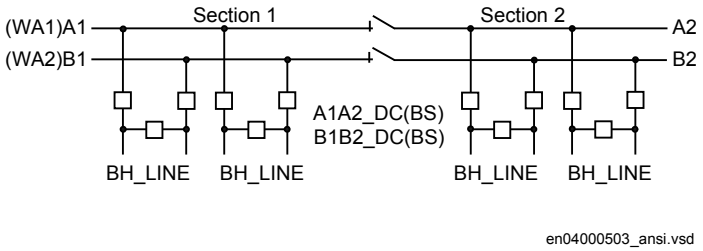

Figure 279: Busbars divided by bus-section disconnectors (circuit breakers)

The project-specific logic is the same as for the logic for the double-breaker configuration.

Signal	
S1DC_OP	All disconnectors on bus-section 1 are open.
S2DC_OP	All disconnectors on bus-section 2 are open.
VPS1_DC	The switch status of disconnectors on bus-section 1 is valid.
VPS2_DC	The switch status of disconnectors on bus-section 2 is valid.
EXDU_BB	No transmission error from breaker and a half (BH) that contains the above information.

3.12.4.7 Interlocking for busbar grounding switch BB_ES (3)

Application

The interlocking for busbar grounding switch (BB_ES, 3) function is used for one busbar grounding switch on any busbar parts according to figure 280.

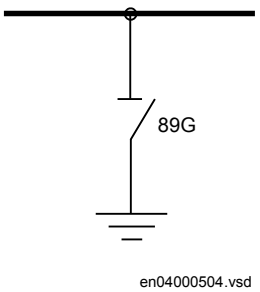

Figure 280: Switchyard layout BB_ES (3)

The signals from other bays connected to the module BB_ES are described below.

Signals in single breaker arrangement

The busbar grounding switch is only allowed to operate if all disconnectors of the bus-section are open.

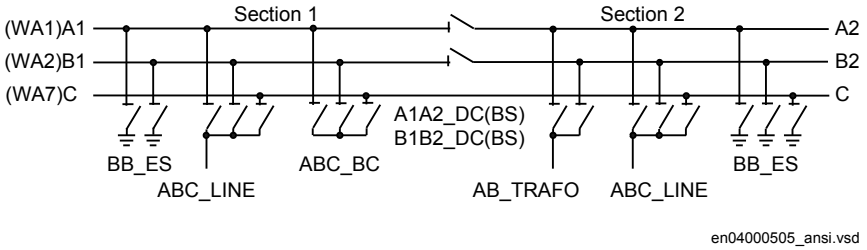

Figure 281: Busbars divided by bus-section disconnectors (circuit breakers)

To derive the signals:

Signal	
BB_DC_OP	All disconnectors on this part of the busbar are open.
VP_BB_DC	The switch status of all disconnector on this part of the busbar is valid.
EXDU_BB	No transmission error from any bay containing the above information.

These signals from each line bay (ABC_LINE), each transformer bay (AB_TRAFO), and each bus-coupler bay (ABC_BC) are needed:

Signal	
189OPTR	189 is open.
289OPTR	289 is open (AB_TRAFO, ABC_LINE)
22089OTR	289 and 2089 are open (ABC_BC)
789OPTR	789 is open.
VP189TR	The switch status of 189 is valid.
VP289TR	The switch status of 289 is valid.
V22089TR	The switch status of 289and 2089 is valid.
VP789TR	The switch status of 789 is valid.
EXDU_BB	No transmission error from the bay that contains the above information.

These signals from each bus-section disconnector bay (A1A2_DC) are also needed. For B1B2_DC, corresponding signals from busbar B are used. The same type of module (A1A2_DC) is used for different busbars, that is, for both bus-section disconnectors A1A2_DC and B1B2_DC.

Signal	
DCOPTR	The bus-section disconnector is open.
VPDCTR	The switch status of bus-section disconnector DC is valid.
EXDU_DC	No transmission error from the bay that contains the above information.

If no bus-section disconnector exists, the signal DCOPTR, VPDCTR and EXDU_DC are set to 1 (TRUE).

If the busbar is divided by bus-section circuit breakers, the signals from the bus-section coupler bay (A1A2_BS) rather than the bus-section disconnector bay (A1A2_DC) must be used. For B1B2_BS, corresponding signals from busbar B are used. The same type of module (A1A2_BS) is used for different busbars, that is, for both bus-section circuit breakers A1A2_BS and B1B2_BS.

Signal	
189OPTR	189 is open.
289OPTR	289 is open.
VP189TR	The switch status of 189 is valid.
VP289TR	The switch status of 289 is valid.
EXDU_BS	No transmission error from the bay BS (bus-section coupler bay) that contains the above information.

For a busbar grounding switch, these conditions from the A1 busbar section are valid:

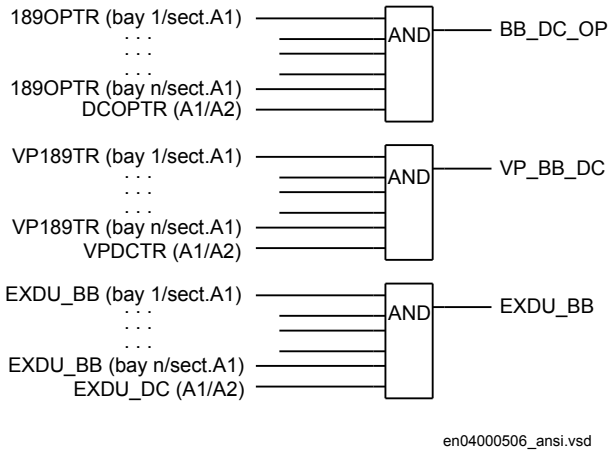

Figure 282: Signals from any bays in section A1 to a busbar grounding switch in the same section

For a busbar grounding switch, these conditions from the A2 busbar section are valid:

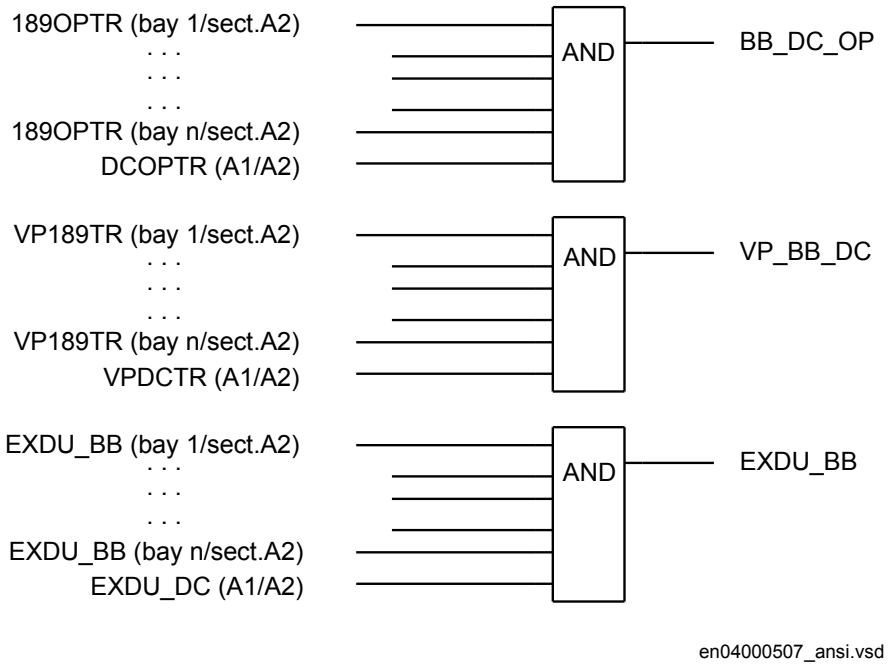

Figure 283: Signals from any bays in section A2 to a busbar grounding switch in the same section

For a busbar grounding switch, these conditions from the B1 busbar section are valid:

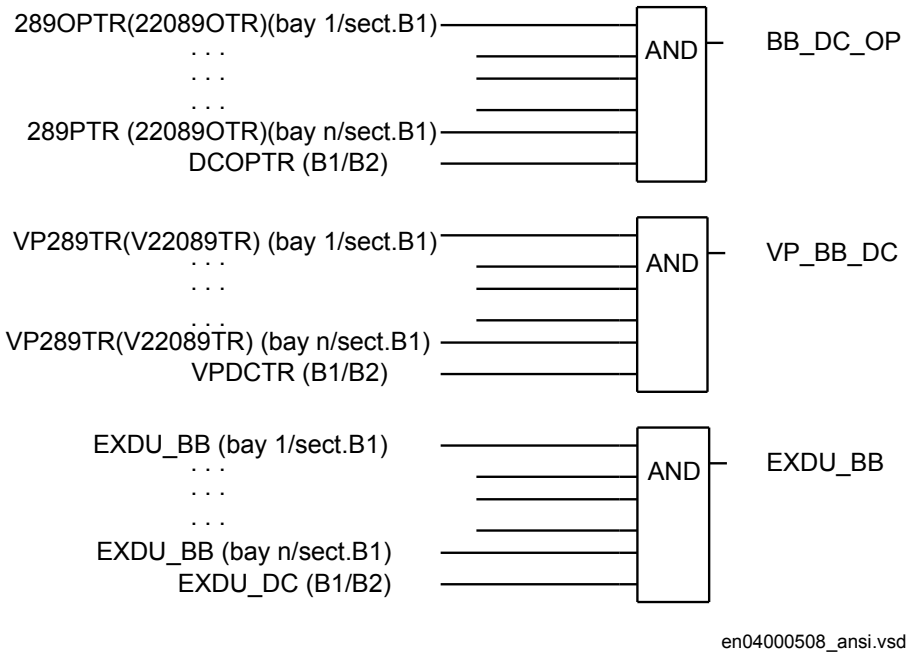

Figure 284: Signals from any bays in section B1 to a busbar grounding switch in the same section

For a busbar grounding switch, these conditions from the B2 busbar section are valid:

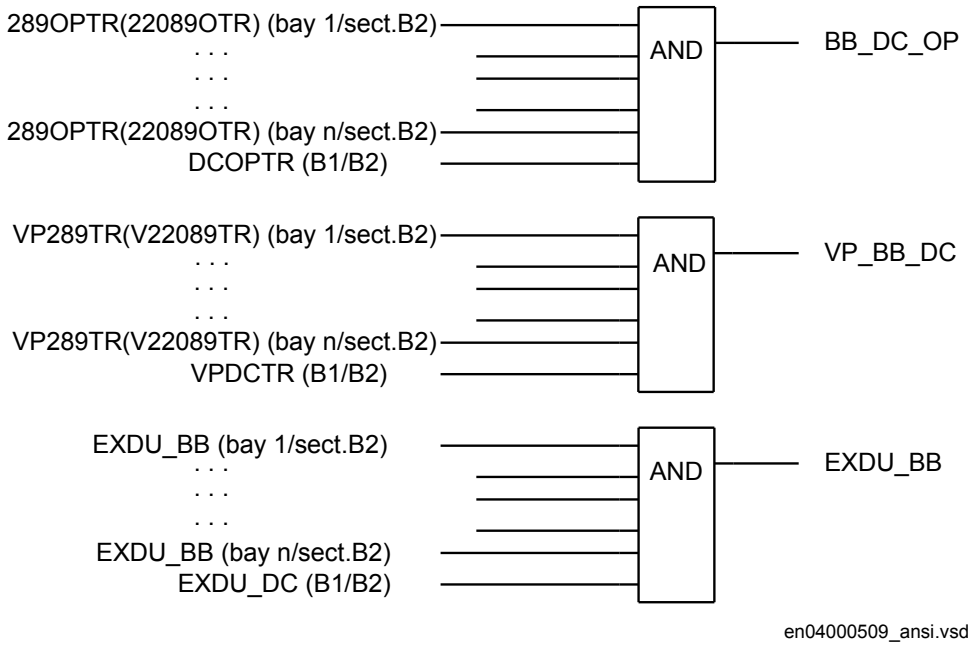

Figure 285: Signals from any bays in section B2 to a busbar grounding switch in the same section

For a busbar grounding switch on bypass busbar C, these conditions are valid:

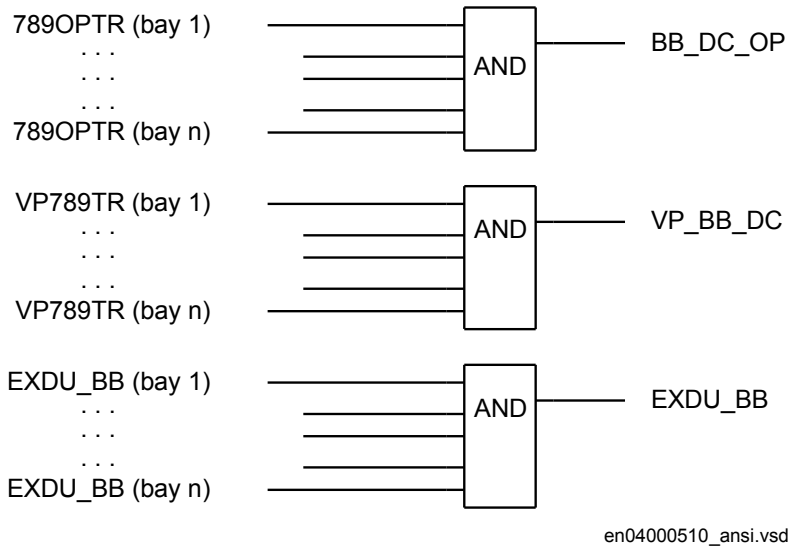

Figure 286: Signals from bypass busbar to busbar grounding switch

Signals in double-breaker arrangement

The busbar grounding switch is only allowed to operate if all disconnectors of the bus section are open.

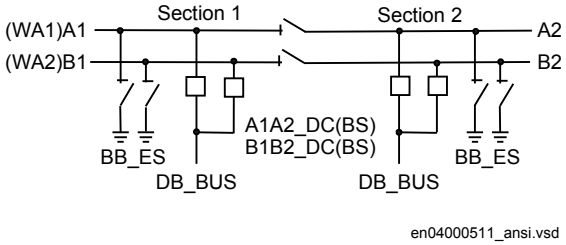

Figure 287: Busbars divided by bus-section disconnectors (circuit breakers)

To derive the signals:

Signal	
BB_DC_OP	All disconnectors of this part of the busbar are open.
VP_BB_DC	The switch status of all disconnectors on this part of the busbar are valid.
EXDU_BB	No transmission error from any bay that contains the above information.

These signals from each double-breaker bay (DB_BUS) are needed:

Signal	
189OPTR	189 is open.
289OPTR	289 is open.
VP189TR	The switch status of 189 is valid.
VP289TR	The switch status of 289 is valid.
EXDU_DB	No transmission error from the bay that contains the above information.

These signals from each bus-section disconnector bay (A1A2_DC) are also needed. For B1B2_DC, corresponding signals from busbar B are used. The same type of module (A1A2_DC) is used for different busbars, that is, for both bus-section disconnectors A1A2_DC and B1B2_DC.

Signal	
DCOPTR	The bus-section disconnector is open.
VPDCTR	The switch status of bus-section disconnector DC is valid.
EXDU_DC	No transmission error from the bay that contains the above information.

The logic is identical to the double busbar configuration described in section “Signals in single breaker arrangement”.

Signals in breaker and a half arrangement

The busbar grounding switch is only allowed to operate if all disconnectors of the bus-section are open.

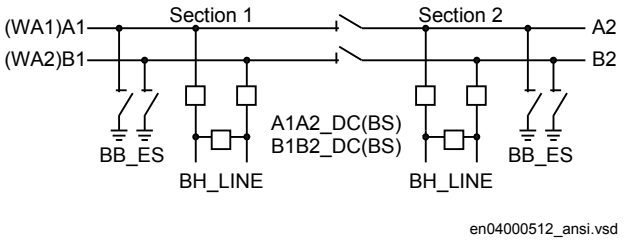

Figure 288: Busbars divided by bus-section disconnectors (circuit breakers)

The project-specific logic are the same as for the logic for the double busbar configuration described in section “Signals in single breaker arrangement”.

Signal	
BB_DC_OP	All disconnectors on this part of the busbar are open.
VP_BB_DC	The switch status of all disconnectors on this part of the busbar is valid.
EXDU_BB	No transmission error from any bay that contains the above information.

3.12.4.8 Interlocking for double CB bay DB (3)

Application

The interlocking for a double busbar double circuit breaker bay including DB_BUS_A (3), DB_BUS_B (3) and DB_LINE (3) functions are used for a line connected to a double busbar arrangement according to figure 289.

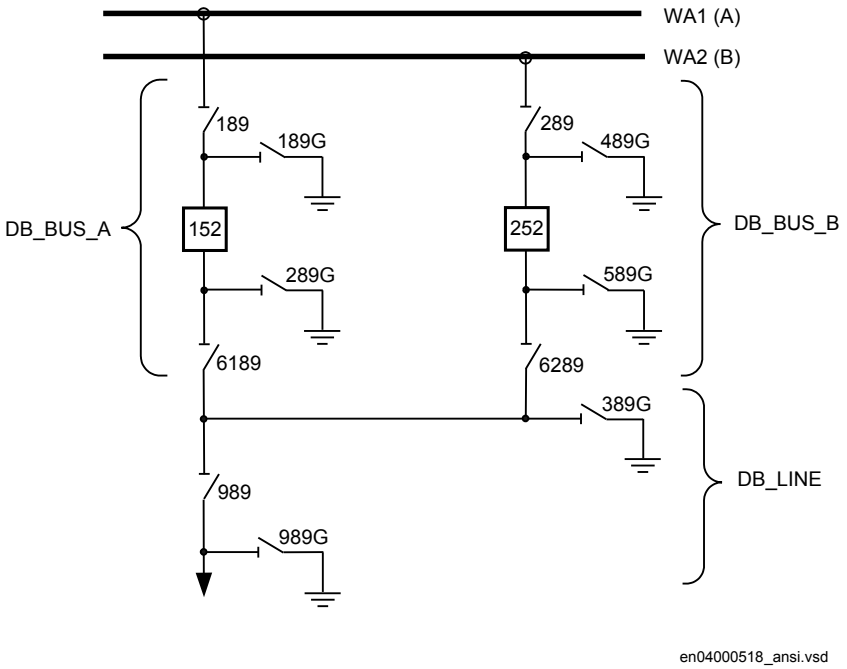

Figure 289: Switchyard layout double circuit breaker

Three types of interlocking modules per double circuit breaker bay are defined. DB_LINE (3) is the connection from the line to the circuit breaker parts that are connected to the busbars. DB_BUS_A (3) and DB_BUS_B (3) are the connections from the line to the busbars.

For a double circuit-breaker bay, the modules DB_BUS_A, DB_LINE and DB_BUS_B must be used.

Configuration setting

For application without 989 and 989G, just set the appropriate inputs to open state and disregard the outputs. In the functional block diagram, 0 and 1 are designated 0=FALSE and 1=TRUE:

- 989_OP = 1
- 989_CL = 0

- 989G_OP = 1
- 989G_CL = 0

If, in this case, line voltage supervision is added, then rather than setting 989 to open state, specify the state of the voltage supervision:

- 989_OP = VOLT_OFF
- 989_CL = VOLT_ON

If there is no voltage supervision, then set the corresponding inputs as follows:

- VOLT_OFF = 1
- VOLT_ON = 0

3.12.4.9 Interlocking for breaker-and-a-half diameter BH (3)

Application

The interlocking for breaker-and-a-half diameter (BH_CONN(3), BH_LINE_A(3), BH_LINE_B(3)) functions are used for lines connected to a breaker-and-a-half diameter according to figure 290.

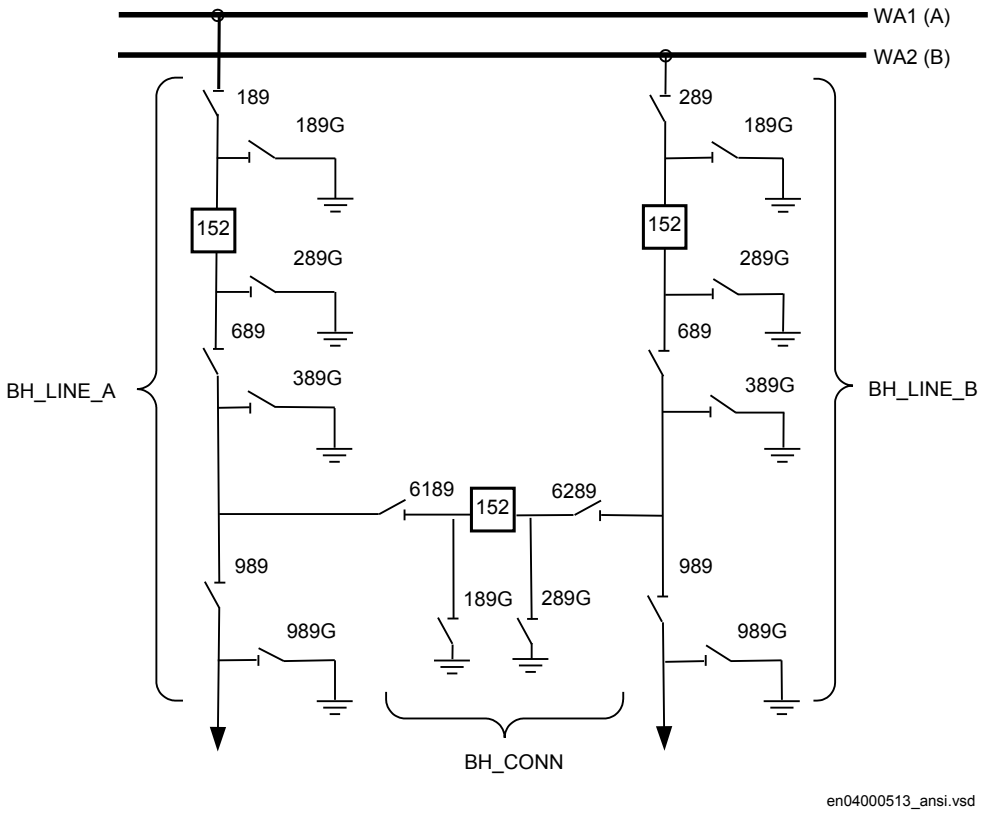

Figure 290: Switchyard layout breaker-and-a-half

Three types of interlocking modules per diameter are defined. BH_LINE_A (3) and BH_LINE_B (3) are the connections from a line to a busbar. BH_CONN (3) is the

connection between the two lines of the diameter in the breaker-and-a-half switchyard layout.

For a breaker-and-a-half arrangement, the modules BH_LINE_A, BH_CONN and BH_LINE_B must be used.

Configuration setting

For application without 989 and 989G, just set the appropriate inputs to open state and disregard the outputs. In the functional block diagram, 0 and 1 are designated 0=FALSE and 1=TRUE:

- 989_OP = 1
- 989_CL = 0

- 989G_OP = 1
- 989G_CL = 0

If, in this case, line voltage supervision is added, then rather than setting 989 to open state, specify the state of the voltage supervision:

- 989_OP = VOLT_OFF
- 989_CL = VOLT_ON

If there is no voltage supervision, then set the corresponding inputs as follows:

- VOLT_OFF = 1
- VOLT_ON = 0

3.12.4.10 Horizontal communication via GOOSE for interlocking GOOSEINTLKRCV

Table 160: GOOSEINTLKRCV Non group settings (basic)

Name	Values (Range)	Unit	Step	Default	Description
Operation	Disabled Enabled	-	-	Disabled	Operation Disabled/Enabled

3.12.5 Logic rotating switch for function selection and LHMI presentation SLGGIO

Function description	IEC 61850 identification	IEC 60617 identification	ANSI/IEEE C37.2 device number
Logic rotating switch for function selection and LHMI presentation	SLGGIO	-	-

3.12.5.1 Application

The logic rotating switch for function selection and LHMI presentation function (SLGGIO) (or the selector switch function block, as it is also known) is used to get a selector switch functionality similar with the one provided by a hardware multi-position selector switch. Hardware selector switches are used extensively by utilities, in order to have different functions operating on pre-set values. Hardware switches are however sources for maintenance issues, lower system reliability and extended purchase portfolio. The virtual selector switches eliminate all these problems.

SLGGIO function block has two operating inputs (UP and DOWN), one blocking input (BLOCK) and one operator position input (PSTO).

SLGGIO can be activated both from the local HMI and from external sources (switches), via the IED binary inputs. It also allows the operation from remote (like the station computer). SWPOSN is an integer value output, giving the actual output number. Since the number of positions of the switch can be established by settings (see below), one must be careful in coordinating the settings with the configuration (if one sets the number of positions to x in settings – for example, there will be only the first x outputs available from the block in the configuration). Also the frequency of the (UP or DOWN) pulses should be lower than the setting *tPulse*.

From the local HMI, there are two modes of operating the switch: from the menu and from the Single-line diagram (SLD).

3.12.5.2 Setting guidelines

The following settings are available for the Logic rotating switch for function selection and LHMI presentation (SLGGIO) function:

Operation: Sets the operation of the function *Enabled* or *Disabled*.

NrPos: Sets the number of positions in the switch (max. 32). This setting influence the behavior of the switch when changes from the last to the first position.

OutType: *Steady* or *Pulsed*.

tPulse: In case of a pulsed output, it gives the length of the pulse (in seconds).

tDelay: The delay between the UP or DOWN activation signal positive front and the output activation.

StopAtExtremes: Sets the behavior of the switch at the end positions – if set to *Disabled*, when pressing UP while on first position, the switch will jump to the last position; when pressing DOWN at the last position, the switch will jump to the first position; when set to *Enabled*, no jump will be allowed.

3.12.5.3 Setting parameters

Table 161: SLGGIO Non group settings (basic)

Name	Values (Range)	Unit	Step	Default	Description
Operation	Disabled Enabled	-	-	Disabled	Operation Enable/Disable
NrPos	2 - 32	-	1	32	Number of positions in the switch
OutType	Pulsed Steady	-	-	Steady	Output type, steady or pulse
tPulse	0.000 - 60.000	s	0.001	0.200	Operate pulse duration, in [s]
tDelay	0.000 - 60000.000	s	0.010	0.000	Time delay on the output, in [s]
StopAtExtremes	Disabled Enabled	-	-	Disabled	Stop when min or max position is reached

3.12.6 Selector mini switch VSGGIO

Function description	IEC 61850 identification	IEC 60617 identification	ANSI/IEEE C37.2 device number
Selector mini switch	VSGGIO	-	-

3.12.6.1 Application

Selector mini switch (VSGGIO) function is a multipurpose function used in the configuration tool in PCM600 for a variety of applications, as a general purpose switch. VSGGIO can be used for both acquiring an external switch position (through the IPOS1 and the IPOS2 inputs) and represent it through the single line diagram symbols (or use it in the configuration through the outputs POS1 and POS2) as well as, a command function (controlled by the PSTO input), giving switching commands through the CMDPOS12 and CMDPOS21 outputs.

The output POSITION is an integer output, showing the actual position as an integer number 0 – 3.

An example where VSGGIO is configured to switch Autorecloser enabled–disabled from a button symbol on the local HMI is shown in figure 291. The Close and Open buttons on the local HMI are normally used for enable–disable operations of the circuit breaker.

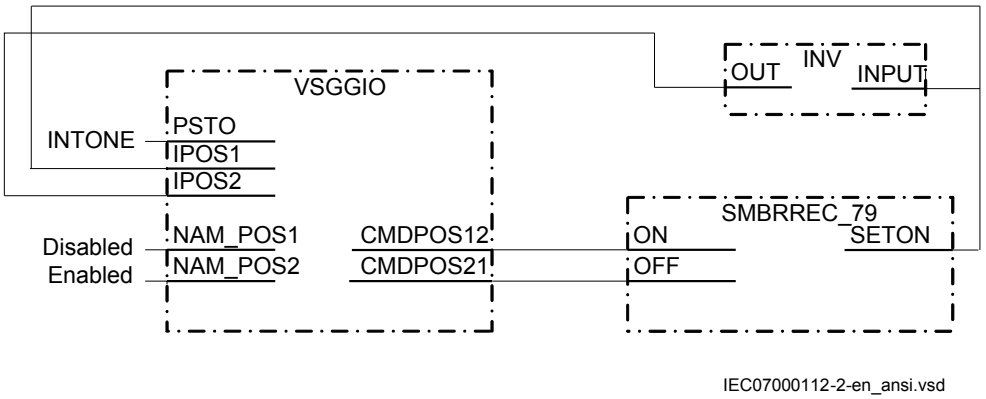

Figure 291: Control of Autorecloser from local HMI through Selector mini switch

VSGGIO is also provided with IEC 61850 communication so it can be controlled from SA system as well.

3.12.6.2 Setting guidelines

Selector mini switch (VSGGIO) function can generate pulsed or steady commands (by setting the *Mode* parameter). When pulsed commands are generated, the length of the pulse can be set using the *tPulse* parameter. Also, being accessible on the single line diagram (SLD), this function block has two control modes (settable through *CtlModel*): *Dir Norm* and *SBO Enh*.

3.12.6.3 Setting parameters

Table 162: VSGGIO Non group settings (basic)

Name	Values (Range)	Unit	Step	Default	Description
Operation	Disabled Enabled	-	-	Disabled	Disable/Enable Operation
CtlModel	Dir Norm SBO Enh	-	-	Dir Norm	Specifies the type for control model according to IEC 61850
Mode	Steady Pulsed	-	-	Pulsed	Operation mode
tSelect	0.000 - 60.000	s	0.001	30.000	Max time between select and execute signals
tPulse	0.000 - 60.000	s	0.001	0.200	Command pulse lenght

3.12.7 IEC61850 generic communication I/O functions DPGGIO

Function description	IEC 61850 identification	IEC 60617 identification	ANSI/IEEE C37.2 device number
IEC 61850 generic communication I/O functions	DPGGIO	-	-

3.12.7.1 Application

The IEC61850 generic communication I/O functions (DPGGIO) function block is used to send three logical outputs to other systems or equipment in the substation. The three inputs are named OPEN, CLOSE and VALID, since this function block is intended to be used as a position indicator block in interlocking and reservation station-wide logics.

3.12.7.2 Setting guidelines

The function does not have any parameters available in the local HMI or PCM600.

3.12.8 Single point generic control 8 signals SPC8GGIO

Function description	IEC 61850 identification	IEC 60617 identification	ANSI/IEEE C37.2 device number
Single point generic control 8 signals	SPC8GGIO	-	-

3.12.8.1 Application

The Single point generic control 8 signals (SPC8GGIO) function block is a collection of 8 single point commands, designed to bring in commands from REMOTE (SCADA) to those parts of the logic configuration that do not need complicated function blocks that have the capability to receive commands (for example SCSWI). In this way, simple commands can be sent directly to the IED outputs, without confirmation. Confirmation (status) of the result of the commands is supposed to be achieved by other means, such as binary inputs and SPGGIO function blocks.

PSTO is the universal operator place selector for all control functions. Even if PSTO can be configured to allow LOCAL or ALL operator positions, the only functional position usable with the SPC8GGIO function block is REMOTE.

3.12.8.2 Setting guidelines

The parameters for the single point generic control 8 signals (SPC8GGIO) function are set via the local HMI or PCM600.

Operation: turning the function operation *Enabled*/*Disabled*.

There are two settings for every command output (totally 8):

Latchedx: decides if the command signal for output *x* is *Latched* (steady) or *Pulsed*.

tPulsex: if *Latchedx* is set to *Pulsed*, then *tPulsex* will set the length of the pulse (in seconds).

3.12.8.3 Setting parameters

Table 163: SPC8GGIO Non group settings (basic)

Name	Values (Range)	Unit	Step	Default	Description
Operation	Disabled Enabled	-	-	Disabled	Operation Disabled/Enabled
Latched1	Pulsed Latched	-	-	Pulsed	Setting for pulsed/latched mode for output 1
tPulse1	0.01 - 6000.00	s	0.01	0.10	Output1 Pulse Time
Latched2	Pulsed Latched	-	-	Pulsed	Setting for pulsed/latched mode for output 2
tPulse2	0.01 - 6000.00	s	0.01	0.10	Output2 Pulse Time
Latched3	Pulsed Latched	-	-	Pulsed	Setting for pulsed/latched mode for output 3
tPulse3	0.01 - 6000.00	s	0.01	0.10	Output3 Pulse Time
Latched4	Pulsed Latched	-	-	Pulsed	Setting for pulsed/latched mode for output 4
tPulse4	0.01 - 6000.00	s	0.01	0.10	Output4 Pulse Time
Latched5	Pulsed Latched	-	-	Pulsed	Setting for pulsed/latched mode for output 5
tPulse5	0.01 - 6000.00	s	0.01	0.10	Output5 Pulse Time
Latched6	Pulsed Latched	-	-	Pulsed	Setting for pulsed/latched mode for output 6
tPulse6	0.01 - 6000.00	s	0.01	0.10	Output6 Pulse Time
Latched7	Pulsed Latched	-	-	Pulsed	Setting for pulsed/latched mode for output 7
tPulse7	0.01 - 6000.00	s	0.01	0.10	Output7 Pulse Time
Latched8	Pulsed Latched	-	-	Pulsed	Setting for pulsed/latched mode for output 8
tPulse8	0.01 - 6000.00	s	0.01	0.10	Output8 pulse time

3.12.9 AutomationBits, command function for DNP3.0 AUTOBITS

Function description	IEC 61850 identification	IEC 60617 identification	ANSI/IEEE C37.2 device number
AutomationBits, command function for DNP3	AUTOBITS	-	-

3.12.9.1 Application

Automation bits, command function for DNP3 (AUTOBITS) is used within PCM600 in order to get into the configuration the commands coming through the DNP3.0 protocol.The AUTOBITS function plays the same role as functions GOOSEBINRCV (for IEC 61850) and MULTICMDRCV (for LON).AUTOBITS function block have 32 individual outputs which each can be mapped as a Binary Output point in DNP3. The output is operated by a "Object 12" in DNP3. This object contains parameters for control-code, count, on-time and off-time. To operate an AUTOBITS output point, send a control-code of latch-On, latch-Off, pulse-On, pulse-Off, Trip or Close. The remaining parameters are regarded as appropriate. For example, pulse-On, on-time=100, off-time=300, count=5 would give 5 positive 100 ms pulses, 300 ms apart.

For description of the DNP3 protocol implementation, refer to the Communication manual.

3.12.9.2 Setting guidelines

AUTOBITS function block has one setting, (*Operation*: *Enabled*/*Disabled*) enabling or disabling the function. These names will be seen in the DNP3 communication management tool in PCM600.

3.12.9.3 Setting parameters

Table 164: DNPGEN Non group settings (basic)

Name	Values (Range)	Unit	Step	Default	Description
Operation	Disabled Enabled	-	-	Disabled	Disable/Enable Operation

Table 165: CHSERRS485 Non group settings (basic)

Name	Values (Range)	Unit	Step	Default	Description
Operation	Disabled Serial-Mode	-	-	Disabled	Operation mode
BaudRate	300 Bd 600 Bd 1200 Bd 2400 Bd 4800 Bd 9600 Bd 19200 Bd	-	-	9600 Bd	Baud-rate for serial port
WireMode	Four-wire Two-wire	-	-	Two-wire	RS485 wire mode

Table 166: CHSERRS485 Non group settings (advanced)

Name	Values (Range)	Unit	Step	Default	Description
DLinkConfirm	Never Sometimes Always	-	-	Never	Data-link confirm
tDLinkTimeout	0.000 - 60.000	s	0.001	2.000	Data-link confirm timeout in s
DLinkRetries	0 - 255	-	1	3	Data-link maximum retries
tRxToTxMinDel	0.000 - 60.000	s	0.001	0.000	Rx to Tx minimum delay in s
ApLayMaxRxSize	20 - 2048	-	1	2048	Application layer maximum Rx fragment size
ApLayMaxTxSize	20 - 2048	-	1	2048	Application layer maximum Tx fragment size
StopBits	1 - 2	-	1	1	Stop bits
Parity	No Even Odd	-	-	Even	Parity
tRTSWarmUp	0.000 - 60.000	s	0.001	0.000	RTS warm-up in s
tRTSWarmDown	0.000 - 60.000	s	0.001	0.000	RTS warm-down in s
tBackOffDelay	0.000 - 60.000	s	0.001	0.050	RS485 back-off delay in s
tMaxRndDelBkOf	0.000 - 60.000	s	0.001	0.100	RS485 maximum back-off random delay in s

Table 167: CH2TCP Non group settings (basic)

Name	Values (Range)	Unit	Step	Default	Description
Operation	Disabled TCP/IP UDP-Only	-	-	Disabled	Operation mode
TCPIPLisPort	1 - 65535	-	1	20000	TCP/IP listen port
UDPPortAccData	1 - 65535	-	1	20000	UDP port to accept UDP datagrams from master
UDPPortInitNUL	1 - 65535	-	1	20000	UDP port for initial NULL response
UDPPortCliMast	0 - 65535	-	1	0	UDP port to remote client/master

Table 168: CH2TCP Non group settings (advanced)

Name	Values (Range)	Unit	Step	Default	Description
ApLayMaxRxSize	20 - 2048	-	1	2048	Application layer maximum Rx fragment size
ApLayMaxTxSize	20 - 2048	-	1	2048	Application layer maximum Tx fragment size

Table 169: CH3TCP Non group settings (basic)

Name	Values (Range)	Unit	Step	Default	Description
Operation	Disabled TCP/IP UDP-Only	-	-	Disabled	Operation mode
TCPIPLisPort	1 - 65535	-	1	20000	TCP/IP listen port
UDPPortAccData	1 - 65535	-	1	20000	UDP port to accept UDP datagrams from master
UDPPortInitNUL	1 - 65535	-	1	20000	UDP port for initial NULL response
UDPPortCliMast	0 - 65535	-	1	0	UDP port to remote client/master

Table 170: CH3TCP Non group settings (advanced)

Name	Values (Range)	Unit	Step	Default	Description
ApLayMaxRxSize	20 - 2048	-	1	2048	Application layer maximum Rx fragment size
ApLayMaxTxSize	20 - 2048	-	1	2048	Application layer maximum Tx fragment size

Table 171: CH4TCP Non group settings (basic)

Name	Values (Range)	Unit	Step	Default	Description
Operation	Disabled TCP/IP UDP-Only	-	-	Disabled	Operation mode
TCPIPLisPort	1 - 65535	-	1	20000	TCP/IP listen port
UDPPortAccData	1 - 65535	-	1	20000	UDP port to accept UDP datagrams from master
UDPPortInitNUL	1 - 65535	-	1	20000	UDP port for initial NULL response
UDPPortCliMast	0 - 65535	-	1	0	UDP port to remote client/master

Table 172: CH4TCP Non group settings (advanced)

Name	Values (Range)	Unit	Step	Default	Description
ApLayMaxRxSize	20 - 2048	-	1	2048	Application layer maximum Rx fragment size
ApLayMaxTxSize	20 - 2048	-	1	2048	Application layer maximum Tx fragment size

Table 173: CH5TCP Non group settings (basic)

Name	Values (Range)	Unit	Step	Default	Description
Operation	Disabled TCP/IP UDP-Only	-	-	Disabled	Operation mode
TCPIPLisPort	1 - 65535	-	1	20000	TCP/IP listen port
UDPPortAccData	1 - 65535	-	1	20000	UDP port to accept UDP datagrams from master
UDPPortInitNUL	1 - 65535	-	1	20000	UDP port for initial NULL response
UDPPortCliMast	0 - 65535	-	1	0	UDP port to remote client/master

Table 174: CH5TCP Non group settings (advanced)

Name	Values (Range)	Unit	Step	Default	Description
ApLayMaxRxSize	20 - 2048	-	1	2048	Application layer maximum Rx fragment size
ApLayMaxTxSize	20 - 2048	-	1	2048	Application layer maximum Tx fragment size

Table 175: MSTRS485 Non group settings (basic)

Name	Values (Range)	Unit	Step	Default	Description
Operation	Disabled Enabled	-	-	Disabled	Disable/Enable Operation
SlaveAddress	0 - 65519	-	1	1	Slave address
MasterAddres	0 - 65519	-	1	1	Master address
Obj1DefVar	1:BISingleBit 2:BIWithStatus	-	-	1:BISingleBit	Object 1, default variation
Obj2DefVar	1:BIChWithoutTime 2:BIChWithTime 3:BIChWithRelTime	-	-	3:BIChWithRelTime	Object 2, default variation
Obj4DefVar	1:DIChWithoutTime 2:DIChWithTime 3:DIChWithRelTime	-	-	3:DIChWithRelTime	Object 4, default variation
Obj10DefVar	1:BO 2:BOStatus	-	-	2:BOStatus	Object 10, default variation
Obj20DefVar	1:BinCnt32 2:BinCnt16 5:BinCnt32WoutF 6:BinCnt16WoutF	-	-	5:BinCnt32WoutF	Object 20, default variation

Table continues on next page

Name	Values (Range)	Unit	Step	Default	Description
Obj22DefVar	1:BinCnt32EvWoutT 2:BinCnt16EvWoutT 5:BinCnt32EvWithT 6:BinCnt16EvWithT	-	-	1:BinCnt32EvWoutT	Object 22, default variation
Obj30DefVar	1:AI32Int 2:AI16Int 3:AI32IntWithoutF 4:AI16IntWithoutF 5:AI32FltWithF 6:AI64FltWithF	-	-	3:AI32IntWithoutF	Object 30, default variation
Obj32DefVar	1:AI32IntEvWoutF 2:AI16IntEvWoutF 3:AI32IntEvWithFT 4:AI16IntEvWithFT 5:AI32FltEvWithF 6:AI64FltEvWithF 7:AI32FltEvWithFT 8:AI64FltEvWithFT	-	-	1:AI32IntEvWoutF	Object 32, default variation

Table 176: MSTRS485 Non group settings (advanced)

Name	Values (Range)	Unit	Step	Default	Description
ValMasterAddr	No Yes	-	-	Yes	Validate source (master) address
AddrQueryEnbl	No Yes	-	-	Yes	Address query enable
tApplConfTout	0.00 - 300.00	s	0.01	10.00	Application layer confim timeout
ApplMultFrgRes	No Yes	-	-	Yes	Enable application for multiple fragment response
ConfMultFrag	No Yes	-	-	Yes	Confirm each multiple fragment
UREnable	No Yes	-	-	Yes	Unsolicited response enabled
URSendOnline	No Yes	-	-	No	Unsolicited response sends when on-line
UREvClassMask	Disabled Class 1 Class 2 Class 1 and 2 Class 3 Class 1 and 3 Class 2 and 3 Class 1, 2 and 3	-	-	Disabled	Unsolicited response, event class mask
UROfflineRetry	0 - 10	-	1	5	Unsolicited response retries before off-line retry mode

Table continues on next page

Name	Values (Range)	Unit	Step	Default	Description
tURRetryDelay	0.00 - 60.00	s	0.01	5.00	Unsolicited response retry delay in s
tUROfflRtryDel	0.00 - 60.00	s	0.01	30.00	Unsolicited response off-line retry delay in s
UREvCntThold1	1 - 100	-	1	5	Unsolicited response class 1 event count report treshold
tUREvBufTout1	0.00 - 60.00	s	0.01	5.00	Unsolicited response class 1 event buffer timeout
UREvCntThold2	1 - 100	-	1	5	Unsolicited response class 2 event count report treshold
tUREvBufTout2	0.00 - 60.00	s	0.01	5.00	Unsolicited response class 2 event buffer timeout
UREvCntThold3	1 - 100	-	1	5	Unsolicited response class 3 event count report treshold
tUREvBufTout3	0.00 - 60.00	s	0.01	5.00	Unsolicited response class 3 event buffer timeout
DelOldBufFull	No Yes	-	-	No	Delete oldest event when buffer is full
tSynchTimeout	30 - 3600	s	1	1800	Time synch timeout before error status is generated
TSyncReqAfTout	No Yes	-	-	No	Time synchronization request after timeout
DNPToSetTime	No Yes	-	-	Yes	Allow DNP to set time in IED
Averag3TimeReq	No Yes	-	-	No	Use average of 3 time requests
PairedPoint	No Yes	-	-	Yes	Enable paired point
tSelectTimeout	1.0 - 60.0	s	0.1	30.0	Select timeout

Table 177: MST1TCP Non group settings (basic)

Name	Values (Range)	Unit	Step	Default	Description
Operation	Disabled Enabled	-	-	Disabled	Operation Disable / Enable
SlaveAddress	0 - 65519	-	1	1	Slave address
MasterAddres	0 - 65519	-	1	1	Master address
ValMasterAddr	No Yes	-	-	Yes	Validate source (master) address
MasterIP-Addr	0 - 18	IP Address	1	0.0.0.0	Master IP-address
MasterIPNetMsk	0 - 18	IP Address	1	255.255.255.255	Master IP net mask
Obj1DefVar	1:BISingleBit 2:BIWithStatus	-	-	1:BISingleBit	Object 1, default variation

Table continues on next page

Name	Values (Range)	Unit	Step	Default	Description
Obj2DefVar	1:BIChWithoutTime 2:BIChWithTime 3:BIChWithRelTime	-	-	3:BIChWithRelTime	Object 2, default variation
Obj3DefVar	1:DIWithoutFlag 2:DIWithFlag	-	-	1:DIWithoutFlag	Object 3, default variation
Obj4DefVar	1:DIChWithoutTime 2:DIChWithTime 3:DIChWithRelTime	-	-	3:DIChWithRelTime	Object 4, default variation
Obj10DefVar	1:BO 2:BOStatus	-	-	2:BOStatus	Object 10, default variation
Obj20DefVar	1:BinCnt32 2:BinCnt16 5:BinCnt32WoutF 6:BinCnt16WoutF	-	-	5:BinCnt32WoutF	Object 20, default variation
Obj22DefVar	1:BinCnt32EvWoutT 2:BinCnt16EvWoutT 5:BinCnt32EvWithT 6:BinCnt16EvWithT	-	-	1:BinCnt32EvWoutT	Object 22, default variation
Obj30DefVar	1:AI32Int 2:AI16Int 3:AI32IntWithoutF 4:AI16IntWithoutF 5:AI32FltWithF 6:AI64FltWithF	-	-	3:AI32IntWithoutF	Object 30, default variation
Obj32DefVar	1:AI32IntEvWoutF 2:AI16IntEvWoutF 3:AI32IntEvWithFT 4:AI16IntEvWithFT 5:AI32FltEvWithF 6:AI64FltEvWithF 7:AI32FltEvWithFT 8:AI64FltEvWithFT	-	-	1:AI32IntEvWoutF	Object 32, default variation

Table 178: MST1TCP Non group settings (advanced)

Name	Values (Range)	Unit	Step	Default	Description
AddrQueryEnbl	No Yes	-	-	Yes	Address query enable
tApplConfTout	0.00 - 300.00	s	0.01	10.00	Application layer confim timeout
ApplMultFrgRes	No Yes	-	-	Yes	Enable application for multiple fragment response
Table continues on next page					

Name	Values (Range)	Unit	Step	Default	Description
ConfMultFrag	No Yes	-	-	Yes	Confirm each multiple fragment
UREnable	No Yes	-	-	Yes	Unsolicited response enabled
UREvClassMask	Disabled Class 1 Class 2 Class 1 and 2 Class 3 Class 1 and 3 Class 2 and 3 Class 1, 2 and 3	-	-	Disabled	Unsolicited response, event class mask
UROfflineRetry	0 - 10	-	1	5	Unsolicited response retries before off-line retry mode
tURRetryDelay	0.00 - 60.00	s	0.01	5.00	Unsolicited response retry delay in s
tUROfflRtryDel	0.00 - 60.00	s	0.01	30.00	Unsolicited response off-line retry delay in s
UREvCntThold1	1 - 100	-	1	5	Unsolicited response class 1 event count report treshold
tUREvBufTout1	0.00 - 60.00	s	0.01	5.00	Unsolicited response class 1 event buffer timeout
UREvCntThold2	1 - 100	-	1	5	Unsolicited response class 2 event count report treshold
tUREvBufTout2	0.00 - 60.00	s	0.01	5.00	Unsolicited response class 2 event buffer timeout
UREvCntThold3	1 - 100	-	1	5	Unsolicited response class 3 event count report treshold
tUREvBufTout3	0.00 - 60.00	s	0.01	5.00	Unsolicited response class 3 event buffer timeout
DelOldBufFull	No Yes	-	-	No	Delete oldest event when buffer is full
ExtTimeFormat	LocalTime UTC	-	-	UTC	External time format
DNPToSetTime	No Yes	-	-	No	Allow DNP to set time in IED
tSynchTimeout	30 - 3600	s	1	1800	Time synch timeout before error status is generated
TSyncReqAfTout	No Yes	-	-	No	Time synchronization request after timeout
Averag3TimeReq	No Yes	-	-	No	Use average of 3 time requests
PairedPoint	No Yes	-	-	Yes	Enable paired point
tSelectTimeout	1.0 - 60.0	s	0.1	30.0	Select timeout
tBrokenConTout	0 - 3600	s	1	0	Broken connection timeout
tKeepAliveT	0 - 3600	s	1	10	Keep-Alive timer

Table 179: MST2TCP Non group settings (basic)

Name	Values (Range)	Unit	Step	Default	Description
Operation	Disabled Enabled	-	-	Disabled	Disable/Enable Operation
SlaveAddress	0 - 65519	-	1	1	Slave address
MasterAddres	0 - 65519	-	1	1	Master address
ValMasterAddr	No Yes	-	-	Yes	Validate source (master) address
MasterIP-Addr	0 - 18	IP Address	1	0.0.0.0	Master IP-address
MasterIPNetMsk	0 - 18	IP Address	1	255.255.255.255	Master IP net mask
Obj1DefVar	1:BISingleBit 2:BIWithStatus	-	-	1:BISingleBit	Object 1, default variation
Obj2DefVar	1:BIChWithoutTime 2:BIChWithTime 3:BIChWithRelTime	-	-	3:BIChWithRelTime	Object 2, default variation
Obj3DefVar	1:DIWithoutFlag 2:DIWithFlag	-	-	1:DIWithoutFlag	Object 3, default variation
Obj4DefVar	1:DIChWithoutTime 2:DIChWithTime 3:DIChWithRelTime	-	-	3:DIChWithRelTime	Object 4, default variation
Obj10DefVar	1:BO 2:BOStatus	-	-	2:BOStatus	Object 10, default variation
Obj20DefVar	1:BinCnt32 2:BinCnt16 5:BinCnt32WoutF 6:BinCnt16WoutF	-	-	5:BinCnt32WoutF	Object 20, default variation

Table continues on next page

Name	Values (Range)	Unit	Step	Default	Description
Obj22DefVar	1:BinCnt32EvWoutT 2:BinCnt16EvWoutT 5:BinCnt32EvWithT 6:BinCnt16EvWithT	-	-	1:BinCnt32EvWoutT	Object 22, default variation
Obj30DefVar	1:AI32Int 2:AI16Int 3:AI32IntWithoutF 4:AI16IntWithoutF 5:AI32FltWithF 6:AI64FltWithF	-	-	3:AI32IntWithoutF	Object 30, default variation
Obj32DefVar	1:AI32IntEvWoutF 2:AI16IntEvWoutF 3:AI32IntEvWithFT 4:AI16IntEvWithFT 5:AI32FltEvWithF 6:AI64FltEvWithF 7:AI32FltEvWithFT 8:AI64FltEvWithFT	-	-	1:AI32IntEvWoutF	Object 32, default variation

Table 180: MST2TCP Non group settings (advanced)

Name	Values (Range)	Unit	Step	Default	Description
AddrQueryEnbl	No Yes	-	-	Yes	Address query enable
tApplConfTout	0.00 - 300.00	s	0.01	10.00	Application layer confim timeout
ApplMultFrgRes	No Yes	-	-	Yes	Enable application for multiple fragment response
ConfMultFrag	No Yes	-	-	Yes	Confirm each multiple fragment
UREnable	No Yes	-	-	Yes	Unsolicited response enabled
UREvClassMask	Disabled Class 1 Class 2 Class 1 and 2 Class 3 Class 1 and 3 Class 2 and 3 Class 1, 2 and 3	-	-	Disabled	Unsolicited response, event class mask
UROfflineRetry	0 - 10	-	1	5	Unsolicited response retries before off-line retry mode
tURRetryDelay	0.00 - 60.00	s	0.01	5.00	Unsolicited response retry delay in s
tUROffIRtryDel	0.00 - 60.00	s	0.01	30.00	Unsolicited response off-line retry delay in s
UREvCntThold1	1 - 100	-	1	5	Unsolicited response class 1 event count report treshold
Table continues on next page					

Name	Values (Range)	Unit	Step	Default	Description
tUREvBufTout1	0.00 - 60.00	s	0.01	5.00	Unsolicited response class 1 event buffer timeout
UREvCntThold2	1 - 100	-	1	5	Unsolicited response class 2 event count report treshold
tUREvBufTout2	0.00 - 60.00	s	0.01	5.00	Unsolicited response class 2 event buffer timeout
UREvCntThold3	1 - 100	-	1	5	Unsolicited response class 3 event count report treshold
tUREvBufTout3	0.00 - 60.00	s	0.01	5.00	Unsolicited response class 3 event buffer timeout
DelOldBufFull	No Yes	-	-	No	Delete oldest event when buffer is full
ExtTimeFormat	LocalTime UTC	-	-	UTC	External time format
DNPToSetTime	No Yes	-	-	No	Allow DNP to set time in IED
tSynchTimeout	30 - 3600	s	1	1800	Time synch timeout before error status is generated
TSyncReqAfTout	No Yes	-	-	No	Time synchronization request after timeout
Averag3TimeReq	No Yes	-	-	No	Use average of 3 time requests
PairedPoint	No Yes	-	-	Yes	Enable paired point
tSelectTimeout	1.0 - 60.0	s	0.1	30.0	Select timeout
tBrokenConTout	0 - 3600	s	1	0	Broken connection timeout
tKeepAliveT	0 - 3600	s	1	10	Keep-Alive timer

Table 181: MST3TCP Non group settings (basic)

Name	Values (Range)	Unit	Step	Default	Description
Operation	Disabled Enabled	-	-	Disabled	Disable/Enable Operation
SlaveAddress	0 - 65519	-	1	1	Slave address
MasterAddres	0 - 65519	-	1	1	Master address
ValMasterAddr	No Yes	-	-	Yes	Validate source (master) address
MasterIP-Addr	0 - 18	IP Address	1	0.0.0.0	Master IP-address
MasterIPNetMsk	0 - 18	IP Address	1	255.255.255.255	Master IP net mask
Obj1DefVar	1:BISingleBit 2:BIWithStatus	-	-	1:BISingleBit	Object 1, default variation

Table continues on next page

Name	Values (Range)	Unit	Step	Default	Description
Obj2DefVar	1:BIChWithoutTime 2:BIChWithTime 3:BIChWithRelTime	-	-	3:BIChWithRelTime	Object 2, default variation
Obj3DefVar	1:DIWithoutFlag 2:DIWithFlag	-	-	1:DIWithoutFlag	Object 3, default variation
Obj4DefVar	1:DIChWithoutTime 2:DIChWithTime 3:DIChWithRelTime	-	-	3:DIChWithRelTime	Object 4, default variation
Obj10DefVar	1:BO 2:BOStatus	-	-	2:BOStatus	Object 10, default variation
Obj20DefVar	1:BinCnt32 2:BinCnt16 5:BinCnt32WoutF 6:BinCnt16WoutF	-	-	5:BinCnt32WoutF	Object 20, default variation
Obj22DefVar	1:BinCnt32EvWoutT 2:BinCnt16EvWoutT 5:BinCnt32EvWithT 6:BinCnt16EvWithT	-	-	1:BinCnt32EvWoutT	Object 22, default variation
Obj30DefVar	1:AI32Int 2:AI16Int 3:AI32IntWithoutF 4:AI16IntWithoutF 5:AI32FltWithF 6:AI64FltWithF	-	-	3:AI32IntWithoutF	Object 30, default variation
Obj32DefVar	1:AI32IntEvWoutF 2:AI16IntEvWoutF 3:AI32IntEvWithFT 4:AI16IntEvWithFT 5:AI32FltEvWithF 6:AI64FltEvWithF 7:AI32FltEvWithFT 8:AI64FltEvWithFT	-	-	1:AI32IntEvWoutF	Object 32, default variation

Table 182: MST3TCP Non group settings (advanced)

Name	Values (Range)	Unit	Step	Default	Description
AddrQueryEnbl	No Yes	-	-	Yes	Address query enable
tApplConfTout	0.00 - 300.00	s	0.01	10.00	Application layer confim timeout
ApplMultFrgRes	No Yes	-	-	Yes	Enable application for multiple fragment response

Table continues on next page

Name	Values (Range)	Unit	Step	Default	Description
ConfMultFrag	No Yes	-	-	Yes	Confirm each multiple fragment
UREnable	No Yes	-	-	Yes	Unsolicited response enabled
UREvClassMask	Disabled Class 1 Class 2 Class 1 and 2 Class 3 Class 1 and 3 Class 2 and 3 Class 1, 2 and 3	-	-	Disabled	Unsolicited response, event class mask
UROfflineRetry	0 - 10	-	1	5	Unsolicited response retries before off-line retry mode
tURRetryDelay	0.00 - 60.00	s	0.01	5.00	Unsolicited response retry delay in s
tUROfflRtryDel	0.00 - 60.00	s	0.01	30.00	Unsolicited response off-line retry delay in s
UREvCntThold1	1 - 100	-	1	5	Unsolicited response class 1 event count report treshold
tUREvBufTout1	0.00 - 60.00	s	0.01	5.00	Unsolicited response class 1 event buffer timeout
UREvCntThold2	1 - 100	-	1	5	Unsolicited response class 2 event count report treshold
tUREvBufTout2	0.00 - 60.00	s	0.01	5.00	Unsolicited response class 2 event buffer timeout
UREvCntThold3	1 - 100	-	1	5	Unsolicited response class 3 event count report treshold
tUREvBufTout3	0.00 - 60.00	s	0.01	5.00	Unsolicited response class 3 event buffer timeout
DelOldBufFull	No Yes	-	-	No	Delete oldest event when buffer is full
ExtTimeFormat	LocalTime UTC	-	-	UTC	External time format
DNPToSetTime	No Yes	-	-	No	Allow DNP to set time in IED
tSynchTimeout	30 - 3600	s	1	1800	Time synch timeout before error status is generated
TSyncReqAfTout	No Yes	-	-	No	Time synchronization request after timeout
Averag3TimeReq	No Yes	-	-	No	Use average of 3 time requests
PairedPoint	No Yes	-	-	Yes	Enable paired point
tSelectTimeout	1.0 - 60.0	s	0.1	30.0	Select timeout
tBrokenConTout	0 - 3600	s	1	0	Broken connection timeout
tKeepAliveT	0 - 3600	s	1	10	Keep-Alive timer

Table 183: MST4TCP Non group settings (basic)

Name	Values (Range)	Unit	Step	Default	Description
Operation	Disabled Enabled	-	-	Disabled	Disable/Enable Operation
SlaveAddress	0 - 65519	-	1	1	Slave address
MasterAddres	0 - 65519	-	1	1	Master address
ValMasterAddr	No Yes	-	-	Yes	Validate source (master) address
MasterIP-Addr	0 - 18	IP Address	1	0.0.0.0	Master IP-address
MasterIPNetMsk	0 - 18	IP Address	1	255.255.255.255	Master IP net mask
Obj1DefVar	1:BISingleBit 2:BIWithStatus	-	-	1:BISingleBit	Object 1, default variation
Obj2DefVar	1:BIChWithoutTime 2:BIChWithTime 3:BIChWithRelTime	-	-	3:BIChWithRelTime	Object 2, default variation
Obj3DefVar	1:DIWithoutFlag 2:DIWithFlag	-	-	1:DIWithoutFlag	Object 3, default variation
Obj4DefVar	1:DIChWithoutTime 2:DIChWithTime 3:DIChWithRelTime	-	-	3:DIChWithRelTime	Object 4, default variation
Obj10DefVar	1:BO 2:BOStatus	-	-	2:BOStatus	Object 10, default variation
Obj20DefVar	1:BinCnt32 2:BinCnt16 5:BinCnt32WoutF 6:BinCnt16WoutF	-	-	5:BinCnt32WoutF	Object 20, default variation

Table continues on next page

Name	Values (Range)	Unit	Step	Default	Description
Obj22DefVar	1:BinCnt32EvWoutT 2:BinCnt16EvWoutT 5:BinCnt32EvWithT 6:BinCnt16EvWithT	-	-	1:BinCnt32EvWoutT	Object 22, default variation
Obj30DefVar	1:AI32Int 2:AI16Int 3:AI32IntWithoutF 4:AI16IntWithoutF 5:AI32FltWithF 6:AI64FltWithF	-	-	3:AI32IntWithoutF	Object 30, default variation
Obj32DefVar	1:AI32IntEvWoutF 2:AI16IntEvWoutF 3:AI32IntEvWithFT 4:AI16IntEvWithFT 5:AI32FltEvWithF 6:AI64FltEvWithF 7:AI32FltEvWithFT 8:AI64FltEvWithFT	-	-	1:AI32IntEvWoutF	Object 32, default variation

Table 184: MST4TCP Non group settings (advanced)

Name	Values (Range)	Unit	Step	Default	Description
AddrQueryEnbl	No Yes	-	-	Yes	Address query enable
tApplConfTout	0.00 - 300.00	s	0.01	10.00	Application layer confim timeout
ApplMultFrgRes	No Yes	-	-	Yes	Enable application for multiple fragment response
ConfMultFrag	No Yes	-	-	Yes	Confirm each multiple fragment
UREnable	No Yes	-	-	Yes	Unsolicited response enabled
UREvClassMask	Disabled Class 1 Class 2 Class 1 and 2 Class 3 Class 1 and 3 Class 2 and 3 Class 1, 2 and 3	-	-	Disabled	Unsolicited response, event class mask
UROfflineRetry	0 - 10	-	1	5	Unsolicited response retries before off-line retry mode
tURRetryDelay	0.00 - 60.00	s	0.01	5.00	Unsolicited response retry delay in s
tUROfflRtryDel	0.00 - 60.00	s	0.01	30.00	Unsolicited response off-line retry delay in s
UREvCntThold1	1 - 100	-	1	5	Unsolicited response class 1 event count report treshold

Table continues on next page

Name	Values (Range)	Unit	Step	Default	Description
tUREvBufTout1	0.00 - 60.00	s	0.01	5.00	Unsolicited response class 1 event buffer timeout
UREvCntThold2	1 - 100	-	1	5	Unsolicited response class 2 event count report treshold
tUREvBufTout2	0.00 - 60.00	s	0.01	5.00	Unsolicited response class 2 event buffer timeout
UREvCntThold3	1 - 100	-	1	5	Unsolicited response class 3 event count report treshold
tUREvBufTout3	0.00 - 60.00	s	0.01	5.00	Unsolicited response class 3 event buffer timeout
DelOldBufFull	No Yes	-	-	No	Delete oldest event when buffer is full
ExtTimeFormat	LocalTime UTC	-	-	UTC	External time format
DNPToSetTime	No Yes	-	-	No	Allow DNP to set time in IED
tSynchTimeout	30 - 3600	s	1	1800	Time synch timeout before error status is generated
TSyncReqAfTout	No Yes	-	-	No	Time synchronization request after timeout
Averag3TimeReq	No Yes	-	-	No	Use average of 3 time requests
PairedPoint	No Yes	-	-	Yes	Enable paired point
tSelectTimeout	1.0 - 60.0	s	0.1	30.0	Select timeout
tBrokenConTout	0 - 3600	s	1	0	Broken connection timeout
tKeepAliveT	0 - 3600	s	1	10	Keep-Alive timer

3.12.10 Single command, 16 signals SINGLECMD

Function description	IEC 61850 identification	IEC 60617 identification	ANSI/IEEE C37.2 device number
Single command, 16 signals	SINGLECMD	-	-

3.12.10.1 Application

Single command, 16 signals (SINGLECMD) is a common function and always included in the IED.

The IEDs may be provided with a function to receive commands either from a substation automation system or from the local HMI. That receiving function block has

outputs that can be used, for example, to control high voltage apparatuses in switchyards. For local control functions, the local HMI can also be used. Together with the configuration logic circuits, the user can govern pulses or steady output signals for control purposes within the IED or via binary outputs.

Figure 292 shows an application example of how the user can connect SINGLECMD via configuration logic circuit to control a high-voltage apparatus. This type of command control is normally carried out by sending a pulse to the binary outputs of the IED. Figure 292 shows a close operation. An open breaker operation is performed in a similar way but without the synchro-check condition.

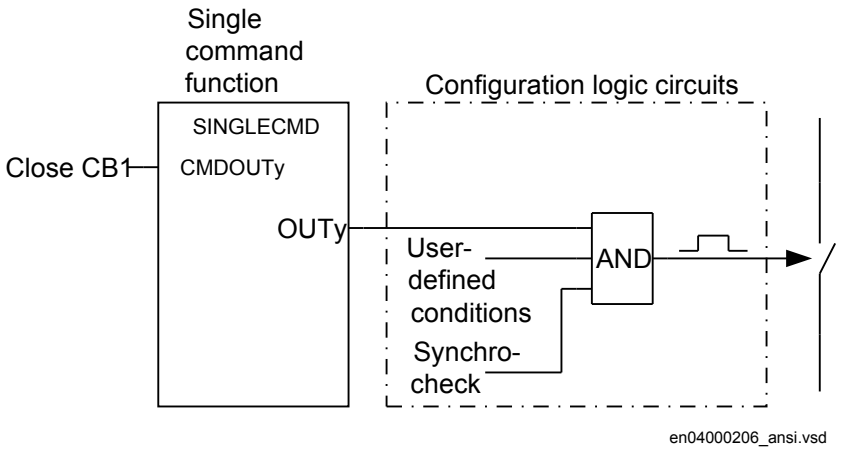

Figure 292: Application example showing a logic diagram for control of a circuit breaker via configuration logic circuits

Figure 293 and figure 294 show other ways to control functions, which require steady Enabled/Disabled signals. Here, the output is used to control built-in functions or external devices.

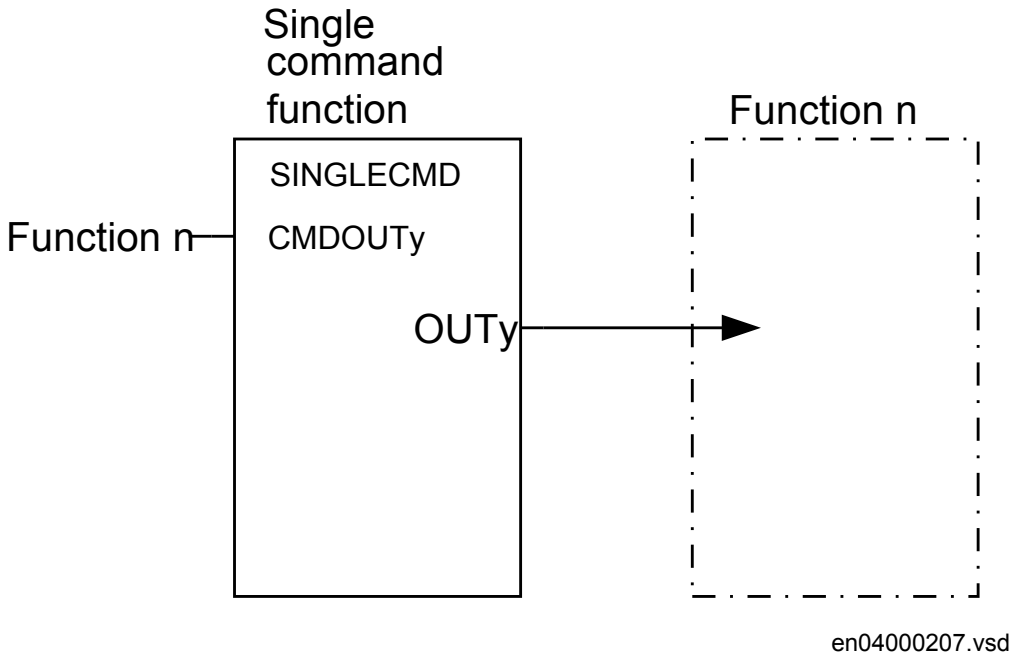

Figure 293: Application example showing a logic diagram for control of built-in functions

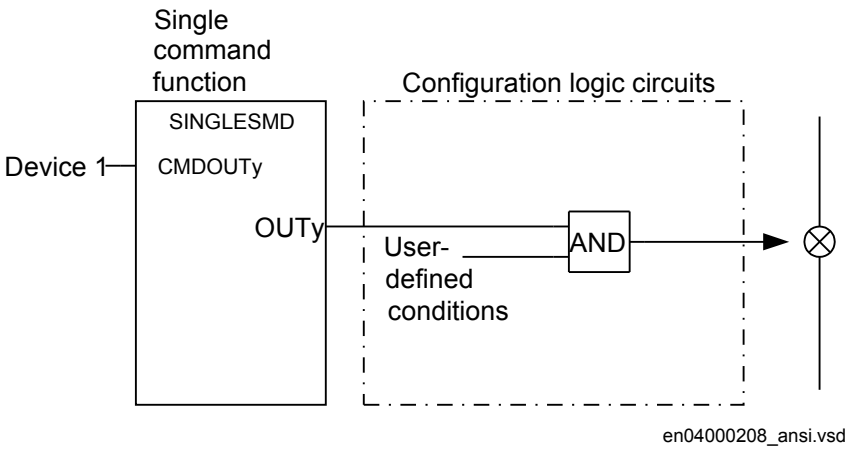

Figure 294: Application example showing a logic diagram for control of external devices via configuration logic circuits

3.12.10.2 Setting guidelines

The parameters for Single command, 16 signals (SINGLECMD) are set via the local HMI or PCM600.

Parameters to be set are MODE, common for the whole block, and CMDOUTy which includes the user defined name for each output signal. The MODE input sets the outputs to be one of the types Disabled, Steady, or Pulse.

- Disabled, sets all outputs to 0, independent of the values sent from the station level, that is, the operator station or remote-control gateway.
- Steady, sets the outputs to a steady signal 0 or 1, depending on the values sent from the station level.
- Pulse, gives a pulse with 100 ms duration, if a value sent from the station level is changed from 0 to 1. That means the configured logic connected to the command function block may not have a cycle time longer than the cycle time for the command function block.

3.12.10.3 Setting parameters

Table 185: SINGLECMD Non group settings (basic)

Name	Values (Range)	Unit	Step	Default	Description
Mode	Disabled Steady Pulsed	-	-	Disabled	Operation mode

3.13 Scheme communication

3.13.1 Scheme communication logic for distance or overcurrent protection ZCPSCH(85)

Function description	IEC 61850 identification	IEC 60617 identification	ANSI/IEEE C37.2 device number
Scheme communication logic for distance or overcurrent protection	ZCPSCH	-	85

3.13.1.1 Application

To achieve fast fault clearing for a fault on the part of the line not covered by the instantaneous zone 1, the stepped distance protection function can be supported with logic, that uses communication channels.

One communication channel in each direction, which can transmit an on/off signal is required. The performance and security of this function is directly related to the transmission channel speed, and security against false or lost signals. For this reason special channels are used for this purpose. When power line carrier is used for communication, these special channels are strongly recommended due to the communication disturbance caused by the primary fault.

Communication speed, or minimum time delay, is always of utmost importance because the purpose for using communication is to improve the tripping speed of the scheme.

To avoid false signals that could cause false tripping, it is necessary to pay attention to the security of the communication channel. At the same time it is important pay attention to the communication channel dependability to ensure that proper signals are communicated during power system faults, the time during which the protection schemes must perform their tasks flawlessly.

The logic supports the following communications schemes; blocking scheme, permissive schemes (overreaching and underreaching), unblocking scheme and direct intertrip.

A permissive scheme is inherently faster and has better security against false tripping than a blocking scheme. On the other hand, permissive scheme depends on a received CR signal for a fast trip, so its dependability is lower than that of a blocking scheme.

Blocking schemes

In blocking scheme a reverse looking zone is used to send a block signal to remote end to block an overreaching zone.

Since the scheme is sending the blocking signal during conditions where the protected line is healthy, it is common to use the line itself as communication media (PLC). The scheme can be used on all line lengths.

The blocking scheme is very dependable because it will operate for faults anywhere on the protected line if the communication channel is out of service. On the other hand, it is less secure than permissive schemes because it will trip for external faults within the reach of the tripping function if the communication channel is out of service.

Inadequate speed or dependability can cause spurious tripping for external faults. Inadequate security can cause delayed tripping for internal faults.

To secure that the send signal will arrive before the zone used in the communication scheme will trip, the trip is released first after the time delay *tCoord* has elapsed. The setting of *tCoord* must be set longer than the maximal transmission time of the channel. A security margin of at least 10 ms should be considered.

The timer *tSendMin* for prolonging the send signal is proposed to set to zero.

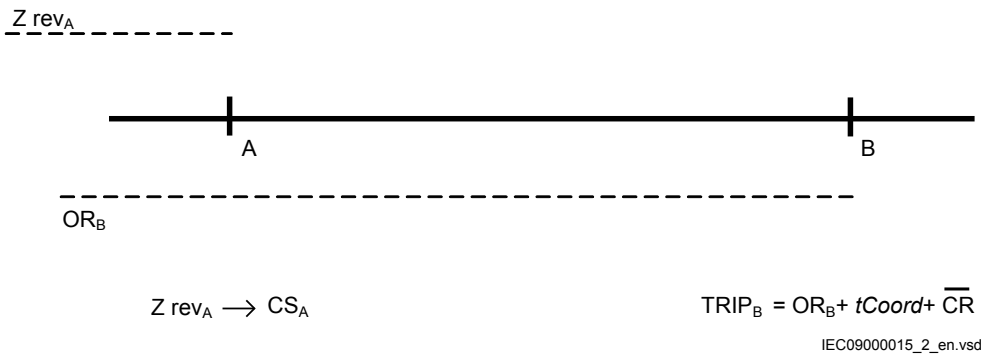

Figure 295: Principle of blocking scheme

OR:	Overreaching
CR:	Communication signal received
CS:	Communication signal send
Z rev$_A$:	Reverse zone

Permissive schemes

In permissive scheme permission to trip is sent from local end to remote end(s), that is protection at local end have detected a fault on the protected object. The received signal(s) is combined with an overreaching zone and gives an instantaneous trip if the received signal is present during the time the chosen zone is detected a fault in forward direction.

Either end may send a permissive (or command) signal to trip to the other end(s), and the teleprotection equipment need to be able to receive while transmitting.

A general requirement on permissive schemes is that it shall be fast and secure.

Depending on if the sending signal(s) is issued by underreaching or overreaching zone, it is divided into Permissive underreach or Permissive overreach scheme.

Permissive underreaching scheme

Permissive underreaching scheme is not suitable to use on short line length due to difficulties for distance protection measurement in general to distinguish between internal and external faults in those applications.

The underreaching zones at local and remote end(s) must overlap in reach to prevent a gap between the protection zones where faults would not be detected. If the underreaching zone do not meet required sensitivity due to for instance fault infeed from remote end blocking or permissive overreaching scheme should be considered.

The received signal (CR) must be received when the overreaching zone is still activated to achieve an instantaneous trip. In some cases, due to the fault current distribution, the overreaching zone can operate only after the fault has been cleared at the terminal nearest to the fault. There is a certain risk that in case of a trip from an independent tripping zone, the zone issuing the send signal (CS) resets before the overreaching zone has operated at the remote terminal. To assure a sufficient duration of the received signal (CR), the send signal (CS), can be prolonged by a *tSendMin* reset timer. The recommended setting of *tSendMin* is 100 ms.

Since the received communication signal is combined with the output from an overreaching zone, there is less concern about false signal causing an incorrect trip. Therefore set the timer *tCoord* to zero.

Failure of the communication channel does not affect the selectivity, but delays tripping at one end(s) for certain fault locations.

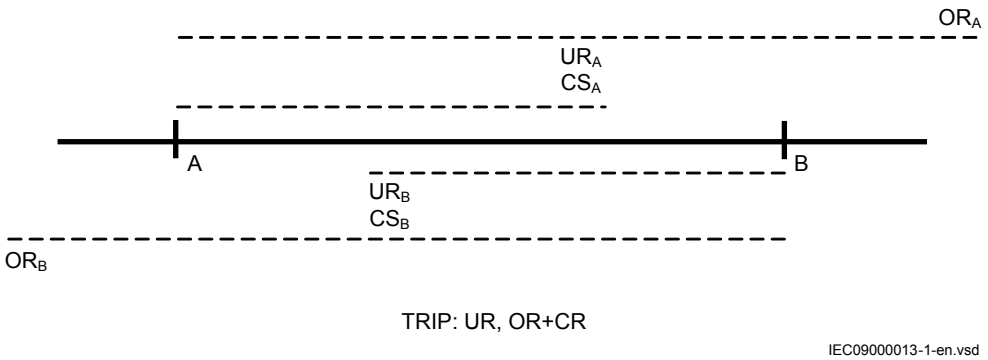

Figure 296: Principle of Permissive underreaching scheme

UR: Underreaching

OR: Overreaching

CR: Communication signal received

CS: Communication signal send

Permissive overreaching scheme

In permissive overreaching scheme there is an overreaching zone that issues the send signal. At remote end the received signal together with activating of an overreaching zone gives instantaneous trip of the protected object. The overreaching zone used in the teleprotection scheme must be activated at the same time as the received signal is present. The scheme can be used for all line lengths.

In permissive overreaching schemes, the communication channel plays an essential roll to obtain fast tripping at both ends. Failure of the communication channel may affect the selectivity and delay tripping at one end at least, for faults anywhere along the protected circuit.

Teleprotection operating in permissive overreaching scheme must beside the general requirement of fast and secure operation also consider requirement on dependability. Inadequate security can cause unwanted tripping for external faults. Inadequate speed or dependability can cause delayed tripping for internal faults or even unwanted operations.

This scheme may use virtually any communication media that is not adversely affected by electrical interference from fault generated noise or by electrical phenomena, such as lightning, that cause faults. Communication media that uses metallic path are particularly subjected to this type of interference, therefore, they must be properly shielded or otherwise designed to provide an adequate communication signal during power system faults.

At the permissive overreaching scheme, the send signal (CS) might be issued in parallel both from an overreaching zone and an underreaching, independent tripping zone. The CS signal from the overreaching zone must not be prolonged while the CS signal from zone 1 can be prolonged.

To secure correct operations of current reversal logic in case of parallel lines, when applied, the send signal CS shall not be prolonged. So set the *tSendMin* to zero in this case.

There is no need to delay the trip at receipt of the signal, so set the timer *tCoord* to zero.

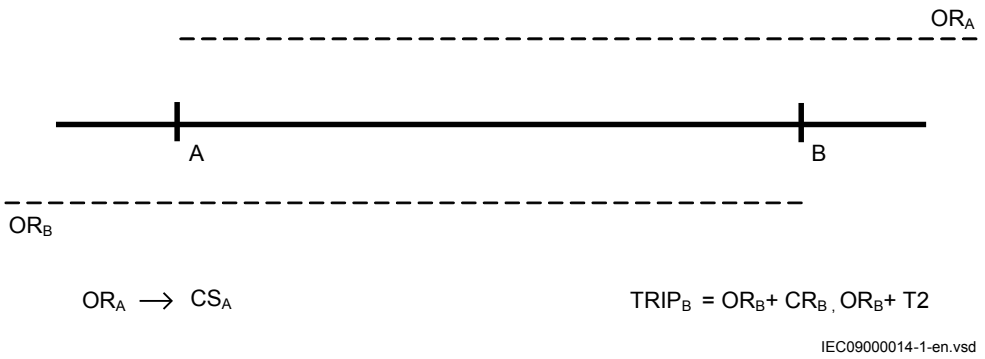

Figure 297: Principle of Permissive overreaching scheme

OR: Overreaching

CR: Communication signal received

CS: Communication signal send

T2: Timer step 2

Unblocking scheme

Metallic communication paths adversely affected by fault generated noise may not be suitable for conventional permissive schemes that rely on signal transmitted during a protected line fault. With power line carrier, for example, the communication signal may be attenuated by the fault, especially when the fault is close to the line end, thereby disabling the communication channel.

To overcome the lower dependability in permissive schemes, an unblocking function can be used. Use this function at older, less reliable, power-line carrier (PLC) communication, where the signal has to be sent through the primary fault. The unblocking function uses a guard signal CR_GUARD, which must always be present, even when no CR signal is received. The absence of the CR_GUARD signal during the security time is used as a CR signal. This also enables a permissive scheme to operate when the line fault blocks the signal transmission. Set the *tSecurity* to 35 ms.

Intertrip scheme

In some power system applications, there is a need to trip the remote end breaker immediately from local protections. This applies, for instance, when transformers or reactors are connected to the system without circuit-breakers or for remote tripping following operation of breaker failure protection.

In intertrip scheme, the send signal is initiated by an underreaching zone or from an external protection (transformer or reactor protection). At remote end, the received signals initiate a trip without any further protection criteria. To limit the risk for

unwanted trip due to spurious sending of signals, the timer *tCoord* should be set to 10-30 ms dependant on type of communication channel.

The general requirement for teleprotection equipment operating in intertripping applications is that it should be very secure and very dependable, since both inadequate security and dependability may cause unwanted operation. In some applications the equipment shall be able to receive while transmitting, and commands may be transmitted over longer time period than for other teleprotection systems.

3.13.1.2 Setting guidelines

The parameters for the scheme communication logic function are set via the local HMI or PCM600.

Configure the zones used for the CS send and for scheme communication tripping by using the ACT configuration tool.

The recommended settings of *tCoord* timer are based on maximal recommended transmission time for analogue channels according to IEC 60834-1. It is recommended to coordinate the proposed settings with actual performance for the teleprotection equipment to get optimized settings.

Blocking scheme

Set *Operation*	= *Enabled*
Set *SchemeType*	= *Blocking*
Set *tCoord*	25 ms (10 ms + maximal transmission time)
Set *tSendMin*	= 0 s
Set *Unblock*	= *Disabled* (Set to *NoRestart* if Unblocking scheme with no alarm for loss of guard is to be used. Set to *Restart* if Unblocking scheme with alarm for loss of guard is to be used)
Set *tSecurity*	= 0.035 s

Permissive underreaching scheme

Set *Operation*	= *Enabled*
Set *SchemeType*	= *Permissive UR*
Set *tCoord*	= 0 ms
Set *tSendMin*	= 0.1 s
Set *Unblock*	= *Disabled*
Set *tSecurity*	= 0.035 s

Permissive overreaching scheme

Set *Operation*	= *Enabled*
Set *Scheme type*	= *Permissive OR*
Set *tCoord*	= 0 ms
Set *tSendMin*	= 0.1 s (0 s in parallel line applications)
Set *Unblock*	= *Disabled*
Set *tSecurity*	= 0.035 s

Unblocking scheme

Set *Unblock*	= *Restart* (Loss of guard signal will give both trip and alarm Choose *NoRestart* if only trip is required)
Set *tSecurity*	= 0.035 s

Intertrip scheme

Set *Operation*	= *Enabled*
Set *SchemeType*	= *Intertrip*
Set *tCoord*	50 ms (10 ms + maximal transmission time)
Set *tSendMin*	= 0.1 s (0 s in parallel line applications)
Set *Unblock*	= *Disabled*
Set *tSecurity*	= 0.015 s

3.13.1.3 Setting parameters

Table 186: ZCPSCH (85) Group settings (basic)

Name	Values (Range)	Unit	Step	Default	Description
Operation	Disabled Enabled	-	-	Disabled	Disable/Enable Operation
SchemeType	Disabled Intertrip Permissive UR Permissive OR Blocking	-	-	Permissive UR	Scheme type
tCoord	0.000 - 60.000	s	0.001	0.035	Communication scheme channel coordination time
tSendMin	0.000 - 60.000	s	0.001	0.100	Minimum duration of a carrier send signal (carrier continuation)

Table 187: ZCPSCH (85) Group settings (advanced)

Name	Values (Range)	Unit	Step	Default	Description
Unblock	Disabled NoRestart Restart	-	-	Disabled	Operation mode of unblocking logic
tSecurity	0.000 - 60.000	s	0.001	0.035	Security timer for loss of carrier guard detection

3.13.2 Phase segregated scheme communication logic for distance protection ZC1PPSCH (85)

Function description	IEC 61850 identification	IEC 60617 identification	ANSI/IEEE C37.2 device number
Phase segregated Scheme communication logic for distance protection	ZC1PPSCH	-	85

3.13.2.1 Application

To achieve fast fault clearing for a fault on the part of the line not covered by the instantaneous zone1, the stepped distance protection function can be supported with logic that uses communication channels.

For the Phase segregated scheme communication logic for distance protection (ZC1PPSCH ,85) three channels in each direction, which can transmit an on/off signal is required.

The performance and security of this function is directly related to the transmission channels speed, and security against false or lost signals. Special communication channels are used for this purpose. When power line carrier is used for communication, these special channels are strongly recommended due to the communication disturbance caused by the primary fault.

Communication speed, or minimum time delay, is always of utmost importance because the purpose for using communication is to improve the total tripping speed of the scheme. To avoid false signals that could cause false tripping, it is necessary to pay attention to the security of the communication channel. At the same time, it is important pay attention to the communication channel dependability to ensure that proper signals are communicated during power system faults, the time during which the protection schemes must perform their tasks flawlessly.

The logic supports the following communications schemes:

- blocking scheme
- permissive schemes (overreach and underreach)
- direct intertrip

A permissive scheme is inherently faster and has better security against false tripping than a blocking scheme. On the other hand, permissive scheme depends on a received CR signal for a fast trip, so its dependability is lower than that of a blocking scheme.

When single-pole tripping is required on parallel lines, an unwanted three-pole trip can occur for simultaneous faults near the line end (typical last 20%). Simultaneous faults are one fault on each of the two lines but in different phases, see figure 298. When simultaneous faults occur, the phase selectors at the remote protection IED - relative to the faults, see the A side in figure 298 - cannot discriminate between the fault on the protected line and on the parallel line. The phase selector must be set to cover the whole line with a margin and will also detect a fault on the parallel line. Instantaneous phase-selective tripping for simultaneous faults close to line end is not possible with the information that is available locally in the remote protection IEDs relative to the faults. The protection IED near the faults detects the faults on the protected line as a forward fault, and on the parallel line in reverse direction. The directional phase selector in the two IEDs near the faults can discriminate between the faults and issue correct single-pole tripping commands.

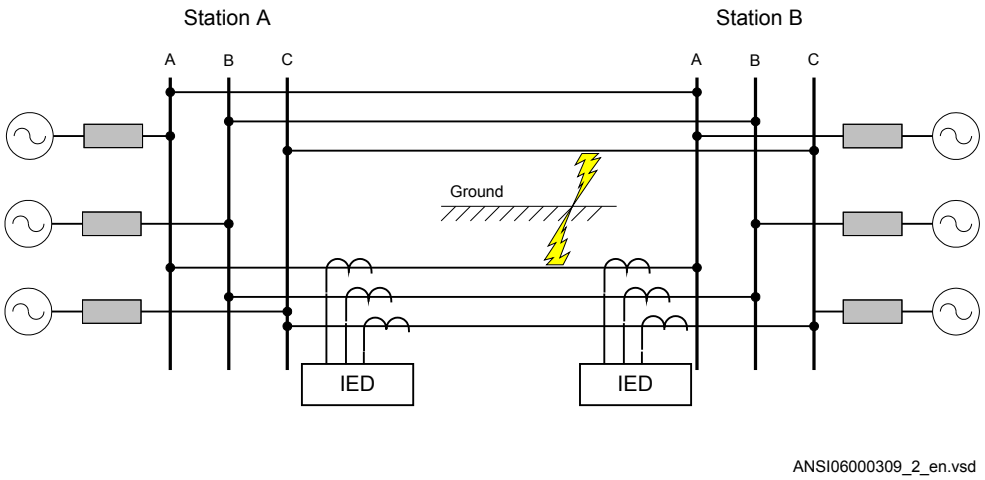

Figure 298: Simultaneous faults on two parallel lines

By using phase-segregated channels for the communication scheme, the correct phase information in the protection IED near the faults can be transferred to the other side protection IED. A correct single-pole trip can be achieved on both lines and at both line IEDs.

ZC1PPSCH (85) requires three individual channels between the protection IEDs on each line in both directions. In case of single-phase faults, only one channel is activated at a time. But in case of multi-phase faults, two or three channels are activated simultaneously.

The following descriptions of the schemes generally presents one of the three identical phases.

When only one channel is available in each direction, use the optionally available three phase communication scheme logic ZCPSCH (85). Note that this logic can issue an unwanted three-pole trip at the described simultaneous faults close to one line end.

Blocking scheme

In blocking scheme a reverse looking zone is used to send a block signal to remote end to block an overreaching zone. Since the scheme is sending the blocking signal during conditions where the protected line is healthy, it is common to use the line itself as communication media (PLC). The scheme can be used on all types of line length.

The blocking scheme is very dependable because it will operate for faults anywhere on the protected line if the communication channel is out of service. Conversely, it is less secure than permissive schemes because it will trip for external faults within the reach of the tripping function if the communication channel is out of service. Inadequate speed or dependability can cause spurious tripping for external faults. Inadequate security can cause delayed tripping for internal faults. To secure that the carrier send signal will arrive before the zone used in the communication scheme will trip, the trip is released first after the time delay *tCoord* has elapsed. The setting of *tCoord* must be set longer than the maximum transmission time of the channel. A security margin of at least 10 ms should be considered.

The timer *tSendMin* for prolonging the carrier send signal is proposed to set to zero in blocking schemes.

Permissive schemes

In permissive scheme permission to trip is sent from local end to remote end(s) that is, protection at local end have detected a fault on the protected object. The received signal(s) is combined with an overreaching zone and gives an instantaneous trip if the received signal is present during the time the chosen zone is detected a fault in forward direction. Either end may send a permissive (or command) signal to trip to the other end(s), and the teleprotection equipment need to be able to receive while transmitting.

Depending on if the sending signal(s) is issued by underreaching or overreaching zone, it is divided into Permissive underreach (PUR) or Permissive overreach (POR) scheme.

Permissive underreach scheme

Permissive underreach scheme is not suitable to use on short line length due to difficulties for distance protection measurement in general to distinguish between internal and external faults in those applications.

The underreaching zones at local and remote end(s) must overlap in reach to prevent a gap between the protection zones where faults would not be detected. If the underreaching zone do not meet required sensitivity due to for instance fault infeed from remote end blocking or permissive overreach scheme should be considered.

The carrier received signal (CR) must be received when the overreaching zone is still activated to achieve an instantaneous trip. In some cases, due to the fault current distribution, the overreaching zone can operate only after the fault has been cleared at the IED nearest to the fault.

There is a certain risk that in case of a trip from an independent tripping zone, the zone issuing the carrier send signal (CS) resets before the overreaching zone has operated at the remote IED. To assure a sufficient duration of the received signal (CR), the send signal (CS), can be prolonged by a *tSendMin* reset timer. The recommended setting of *tSendMin* is 100 ms. Since the received communication signal is combined with the output from an overreaching zone, there is less concern about false signal causing an incorrect trip. Therefore set the timer *tCoord* to zero. Failure of the communication channel does not affect the selectivity, but delays tripping at one end(s) for certain fault locations.

Permissive overreach scheme

In permissive overreach scheme there is an overreaching zone that issue the carrier send signal. At remote end the received signal together with activating of an overreaching zone gives instantaneous trip of the protected object. The overreaching zone used in the teleprotection scheme must be activated at the same time as the received signal is present. The scheme can be used for all type line lengths.

In permissive overreach schemes, the communication channel plays an essential roll to obtaining fast tripping at both ends. Failure of the communication channel may affect the selectivity and delay tripping at one end at least, for faults anywhere along the protected circuit. Teleprotection operating in permissive overreach scheme must beside the general requirement of fast and secure operation also requirement on dependability must be considered. Inadequate security can cause unwanted tripping for external faults. Inadequate speed or dependability can cause delayed tripping for internal faults or even unwanted operations.

This scheme may use virtually any communication media that is not adversely affected by electrical interference from fault generated noise or by electrical phenomena, such as lightning, that cause faults. Communication media that uses metallic path are particularly subjected to this type of interference, therefore, they must be properly shielded or otherwise designed to provide an adequate communication signal during

power system faults. At the permissive overreaching scheme, the carrier send signal (CS) might be issued in parallel both from an overreaching zone and an underreaching, independent tripping zone. The CS signal from the overreaching zone must not be prolonged while the CS signal from zone1 can be prolonged. To secure correct operations of current reversal logic in case of parallel lines, when applied, the carrier send signal CS shall not be prolonged. So set the *tSendMin* to zero in this case. There is no need to delay the trip at receive of the carrier signal, so set the timer *tCoord* to zero.

Unblocking scheme

Unblocking scheme cannot be used at ZC1PPSCH (85) as a failure of the communication channel cannot give any information about which phase/phases have a fault.

Intertrip scheme

In some power system applications, there is a need to trip the remote end breaker immediately from local protections. This applies, for instance, when transformers or reactors are connected to the system without circuit-breakers or for remote tripping following operation of Breaker failure protection (CCRBRF, 50BF).

In intertrip scheme, the carrier send signal is initiated by an underreaching zone or from an external protection (transformer or reactor protection). At remote end, the received signals initiate a trip without any further protection criteria. To limit the risk for unwanted trip due to spurious sending of signals, the timer *tCoord* should be set to 10-30 ms dependant on type and security of the communication channel.

The general requirement for teleprotection equipment operating in intertripping applications is that it should be very secure and very dependable, since both inadequate security and dependability may cause unwanted operation. In some applications the equipment shall be able to receive while transmitting, and commands may be transmitted over longer time period than for other teleprotection systems.

3.13.2.2 Setting guidelines

The parameters for the Phase segregated scheme communication logic for distance protection function ZC1PPSCH (85) are set via the local HMI or PCM600.

Configure the zones used for the CS carrier send and for scheme communication tripping by using the Application Configuration tool. The recommended settings of *tCoord* timer are based on maximal recommended transmission time for analog channels according to IEC 60834-1. It is recommended to coordinate the proposed settings with actual performance for the teleprotection equipment to get optimized settings.

Permissive underreache scheme

Set *Operation*	=	*On*
Set *Scheme type*	=	*Permissive UR*
Set *tCoord*	=	0 ms
Set *tSendMin*	=	0.1 s

Permissive overreach scheme

Set *Operation*	=	*On*
Set *Scheme type*	=	*Permissive OR*
Set *tCoord*	=	0 ms
Set *tSendMin*	=	0.1 s

Blocking scheme

Set *Operation*	=	*On*
Set *Scheme type*	=	*Blocking*
Set *tCoord*	=	25 ms (10 ms + maximal transmission time)
Set *tSendMin*	=	0 s

Intertrip scheme

Set *Operation*	=	*On*
Set *Scheme type*	=	*Intertrip*
Set *tCoord*	=	50 ms (10 ms + maximal transmission time)
Set *tSendMin*	=	0.1 s

3.13.2.3 Setting parameters

Table 188: ZC1PPSCH (85) Group settings (basic)

Name	Values (Range)	Unit	Step	Default	Description
Operation	Disabled Enabled	-	-	Disabled	Operation Enable / Disable
Scheme Type	Disabled Intertrip Permissive UR Permissive OR Blocking	-	-	Permissive UR	Scheme type
tCoord	0.000 - 60.000	s	0.001	0.000	Trip coordinate time
tSendMin	0.000 - 60.000	s	0.001	0.100	Minimum duration of Carrier Send signal

3.13.3 Current reversal and WEI logic for distance protection 3-phase ZCRWPSCH (85)

Function description	IEC 61850 identification	IEC 60617 identification	ANSI/IEEE C37.2 device number
Current reversal and weak-end infeed logic for distance protection	ZCRWPSCH	-	85

3.13.3.1 Application

Current reversal logic

If parallel lines are connected to common buses at both terminals, overreaching permissive communication schemes can trip unselectable due to current reversal. The unwanted tripping affects the healthy line when a fault is cleared on the other line. This lack of security results in a total loss of inter-connection between the two buses.

To avoid this kind of disturbances, a fault current reversal logic (transient blocking logic) can be used.

The unwanted operations that might occur can be explained by looking into figure 299 and figure 300. Initially the protection A:2 at A side will detect a fault in forward direction and send a communication signal to the protection B:2 at remote end, which is measuring a fault in reverse direction.

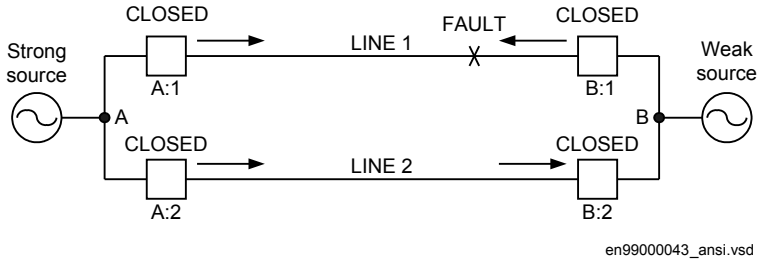

Figure 299: Current distribution for a fault close to B side when all breakers are closed

When the breaker B:1 opens for clearing the fault, the fault current through B:2 bay will invert. If the communication signal has not reset at the same time as the distance protection function used in the Teleprotection scheme has switched on to forward direction, we will have an unwanted operation of breaker B:2 at B side.

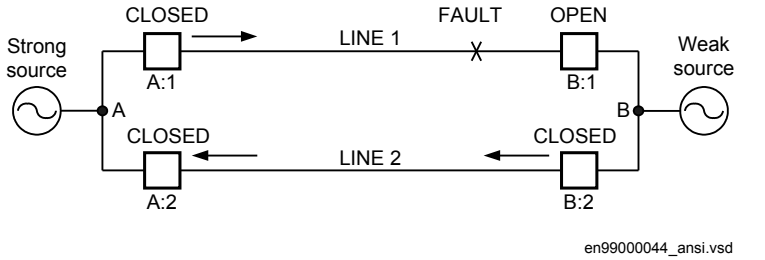

Figure 300: Current distribution for a fault close to B side when breaker B:1 has opened

To handle this the send signal CS or CSLn from B:2 is held back until the reverse zone IRVLn has reset and the *tDelayRev* time has elapsed. To achieve this the reverse zone on the distance protection shall be connected to input IRV and the output IRVL shall be connected to input BLKCS on the communication function block ZCPSCH.

The function can be blocked by activating the input IRVBLK or the general BLOCK input.

Weak-end infeed logic

Permissive communication schemes can basically operate only when the protection in the remote IED can detect the fault. The detection requires a sufficient minimum fault current, normally >20% of In. The fault current can be too low due to an open breaker or low short-circuit power of the source. To overcome these conditions, weak-end infeed (WEI) echo logic is used. The fault current can also be initially too low due to the fault current distribution. Here, the fault current increases when the breaker opens in the strong terminal, and a sequential tripping is achieved. This requires a detection of the fault by an independent tripping zone 1. To avoid sequential tripping as described, and when zone 1 is not available, weak-end infeed tripping logic is used.

The WEI function sends back (echoes) the received signal under the condition that no fault has been detected on the weak-end by different fault detection elements (distance protection in forward and reverse direction).

The WEI function can be extended to trip also the breaker in the weak side. The trip is achieved when one or more phase voltages are low during an echo function.

In case of single-pole tripping, the phase voltages are used as phase selectors together with the received signal CRLx.

Together with the blocking Teleprotection scheme some limitations apply:

- Only the trip part of the function can be used together with the blocking scheme. It is not possible to use the echo function to send the echo signal to the remote line IED. The echo signal would block the operation of the distance protection at the remote line end and in this way prevent the correct operation of a complete protection scheme.
- A separate direct intertrip channel must be arranged from remote end when a trip or accelerated trip is given there. The intertrip receive signal is connect to input CRL.
- The WEI function shall be set to *WEI=Echo&Trip*. The WEI function block will then give phase selection and trip the local breaker.

Avoid using WEI function at both line ends. It shall only be activated at the weak-end.

3.13.3.2 Setting guidelines

The parameters for the current reversal logic and the weak-end infeed logic (WEI) function are set via the local HMI or PCM600.

Current reversal logic

Set *CurrRev* to *Enabled* to activate the function.

Set *tDelayRev* timer at the maximum reset time for the communication equipment that gives the carrier receive (CRL) signal plus 30 ms. A minimum setting of 40 ms is recommended, typical 60 ms.

A long *tDelayRev* setting increases security against unwanted tripping, but delay the fault clearing in case of a fault developing from one line to involve the other one. The probability of this type of fault is small. Therefore set *tDelayRev* with a good margin.

Set the pick-up delay *tPickUpRev* to <80% of the breaker operate time, but with a minimum of 20 ms.

Weak-end infeed logic

Set *WEI* to *Echo*, to activate the weak-end infeed function with only echo function.

Set *WEI* to *Echo&Trip* to obtain echo with trip.

Set *tPickUpWEI* to *10* ms, a short delay is recommended to avoid that spurious carrier received signals will activate WEI and cause unwanted communications.

Set *VBase* to the system primary phase-to-phase voltage.

Set the voltage criterion *PU27PP* and *PU27PN* for the weak-end trip to 70% of the system base voltage *VBase*. The setting should be below the minimum operate voltage of the system but above the voltage that occurs for fault on the protected line. The phase-to-phase elements must be verified to not operate for phase to ground faults.

When single pole tripping is required a detailed study of the voltages at phase-to-phase respectively phase-to-ground faults, at different fault locations, is normally required.

3.13.3.3 Setting parameters

Table 189: ZCRWPSCH (85) Group settings (basic)

Name	Values (Range)	Unit	Step	Default	Description
CurrRev	Disabled Enabled	-	-	Disabled	Operating mode of Current Reversal Logic
tPickUpRev	0.000 - 60.000	s	0.001	0.020	Pickup time for current reversal logic
tDelayRev	0.000 - 60.000	s	0.001	0.060	Time Delay to prevent Carrier send and local trip
WEI	Disabled Echo Echo & Trip	-	-	Disabled	Operating mode of WEI logic
tPickUpWEI	0.000 - 60.000	s	0.001	0.010	Coordination time for the WEI logic
VBase	0.05 - 2000.00	kV	0.05	400.00	Base setting for voltage level
PU27PP	10 - 90	%VB	1	70	Phase to Phase voltage for detection of fault condition
PU27PN	10 - 90	%VB	1	70	Phase to Neutral voltage for detection of fault condition

3.13.4 Local acceleration logic ZCLCPLAL

Function description	IEC 61850 identification	IEC 60617 identification	ANSI/IEEE C37.2 device number
Local acceleration logic	ZCLCPLAL	-	-

3.13.4.1 Application

The local acceleration logic (ZCLCPLAL) is used in those applications where conventional teleprotection scheme is not available (no communication channel), but the user still require fast clearance for faults on the whole line.

This logic enables fast fault clearing during certain conditions, but naturally, it can not fully replace a teleprotection scheme.

The logic can be controlled either by the autorecloser (zone extension) or by the loss-of-load current (loss-of-load acceleration).

The loss-of-load acceleration gives selected overreach zone permission to operate instantaneously after check of the different current criteria. It can not operate for three-phase faults.

3.13.4.2 Setting guidelines

The parameters for the local acceleration logic functions are set via the local HMI or PCM600.

Set *ZoneExtension* to *Enabled* when the first trip from selected overreaching zone shall be instantaneous and the definitive trip after autoreclosure a normal time-delayed trip.

Set *LossOfLoad* to *Enabled* when the acceleration shall be controlled by loss-of-load in healthy phase(s).

LoadCurr must be set below the current that will flow on the healthy phase when one or two of the other phases are faulty and the breaker has opened at remote end (three-phase). Calculate the setting according to equation 417.

$$LoadCurr = \frac{0.5 \cdot I_{Load\ \min}}{I_{Base}}$$

(Equation 417)

where:

ILoadmin is the minimum load current on the line during normal operation conditions.

The timer *tLoadOn* is used to increase the security of the loss-of-load function for example to avoid unwanted release due to transient inrush current when energizing the line power transformer. The loss-of-load function will be released after the timer *tLoadOn* has elapsed at the same time as the load current in all three phases are above the setting *LoadCurr*. In normal acceleration applications there is no need for delaying the release, so set the *tLoadOn* to zero.

The drop-out timer *tLoadOff* is used to determine the window for the current release conditions for Loss-of-load. The timer is by default set to 300ms, which is judged to be enough to secure the current release.

The setting of the minimum current detector, *MinCurr*, should be set higher than the unsymmetrical current that might flow on the non faulty line, when the breaker at remote end has opened (three-phase). At the same time it should be set below the minimum load current transfer during normal operations that the line can be subjected to. By default, *MinCurr* is set to 5% of *IBase*.

The pick-up timer *tLowCurr* determine the window needed for pick-up of the minimum current value used to release the function. The timer is by default set to 200 ms, which is judged to be enough to avoid unwanted release of the function (avoid unwanted trip).

3.13.4.3 Setting parameters

Table 190: ZCLCPLAL Group settings (basic)

Name	Values (Range)	Unit	Step	Default	Description
Operation	Disabled Enabled	-	-	Disabled	Disable/Enable Operation
IBase	1 - 99999	A	1	3000	Base setting for current values
LoadCurr	1 - 100	%IB	1	10	Load current before disturbance in % of IBase
LossOfLoad	Disabled Enabled	-	-	Disabled	Enable/Disable operation of Loss of load.
ZoneExtension	Disabled Enabled	-	-	Disabled	Enable/Disable operation of Zone extension
MinCurr	1 - 100	%IB	1	5	Lev taken as curr loss due to remote CB trip in % of IBase
tLowCurr	0.000 - 60.000	s	0.001	0.200	Time delay on pick-up for MINCURR value
tLoadOn	0.000 - 60.000	s	0.001	0.000	Time delay on pick-up for load current release
tLoadOff	0.000 - 60.000	s	0.001	0.300	Time delay on drop off for load current release

3.13.5 Scheme communication logic for residual overcurrent protection ECPSCH (85)

Function description	IEC 61850 identification	IEC 60617 identification	ANSI/IEEE C37.2 device number
Scheme communication logic for residual overcurrent protection	ECPSCH	-	85

3.13.5.1 Application

To achieve fast fault clearance of ground faults on the part of the line not covered by the instantaneous step of the residual overcurrent protection, the directional residual overcurrent protection can be supported with a logic that uses communication channels.

One communication channel is used in each direction, which can transmit an on/off signal if required. The performance and security of this function is directly related to the transmission channel speed and security against false or lost signals.

In the directional scheme, information of the fault current direction must be transmitted to the other line end.

With directional comparison in permissive schemes, a short operate time of the protection including a channel transmission time, can be achieved. This short operate time enables rapid autoreclosing function after the fault clearance.

During a single-phase reclosing cycle, the autoreclosing device must block the directional comparison ground-fault communication scheme.

The communication logic module enables blocking as well as permissive under/overreaching schemes. The logic can also be supported by additional logic for weak-end infeed and current reversal, included in the Current reversal and weak-end infeed logic for residual overcurrent protection (ECRWPSCH, 85) function.

Metallic communication paths adversely affected by fault generated noise may not be suitable for conventional permissive schemes that rely on signal transmitted during a protected line fault. With power line carrier, for example, the communication signal may be attenuated by the fault, especially when the fault is close to the line end, thereby disabling the communication channel.

To overcome the lower dependability in permissive schemes, an unblocking function can be used. Use this function at older, less reliable, power line carrier (PLC) communication, where the signal has to be sent through the primary fault. The unblocking function uses a guard signal CRG, which must always be present, even when no CR signal is received. The absence of the CRG signal during the security time is used as a CR signal. This also enables a permissive scheme to operate when the line fault blocks the signal transmission. Set the *tSecurity* to 35 ms.

3.13.5.2 Setting guidelines

The parameters for the scheme communication logic for residual overcurrent protection function are set via the local HMI or PCM600.

The following settings can be done for the scheme communication logic for residual overcurrent protection function:

Operation: *Disabled* or *Enabled*.

SchemeType: This parameter can be set to *Off* , *Intertrip*, *Permissive UR*, *Permissive OR* or *Blocking*.

tCoord: Delay time for trip from ECPSCH (85) function. For Permissive under/overreaching schemes, this timer shall be set to at least 20 ms plus maximum reset time of the communication channel as a security margin. For Blocking scheme, the setting should be > maximum signal transmission time +10 ms.

Unblock: Select *Off* if unblocking scheme with no alarm for loss of guard is used. Set to *Restart* if unblocking scheme with alarm for loss of guard is used.

3.13.5.3 Setting parameters

Table 191: ECPSCH (85) Group settings (basic)

Name	Values (Range)	Unit	Step	Default	Description
Operation	Disabled Enabled	-	-	Disabled	Disable/Enable Operation
SchemeType	Disabled Intertrip Permissive UR Permissive OR Blocking	-	-	Permissive UR	Scheme type, Mode of Operation
tCoord	0.000 - 60.000	s	0.001	0.035	Communication scheme channel coordination time
tSendMin	0.000 - 60.000	s	0.001	0.100	Minimum duration of a carrier send signal (carrier continuation)

Table 192: ECPSCH (85) Group settings (advanced)

Name	Values (Range)	Unit	Step	Default	Description
Unblock	Disabled NoRestart Restart	-	-	Disabled	Operation mode of unblocking logic
tSecurity	0.000 - 60.000	s	0.001	0.035	Security timer for loss of carrier guard detection

3.13.6 Current reversal and weak-end infeed logic for residual overcurrent protection ECRWPSCH (85)

Function description	IEC 61850 identification	IEC 60617 identification	ANSI/IEEE C37.2 device number
Current reversal and weak-end infeed logic for residual overcurrent protection	ECRWPSCH	-	85

3.13.6.1 Application

Fault current reversal logic

Figure 301 and figure 302 show a typical system condition, which can result in a fault current reversal.

Note that the fault current is reversed in line L2 after the breaker opening.

This can cause an unselective trip on line L2 if the current reversal logic does not block the permissive overreaching scheme in the IED at B:2.

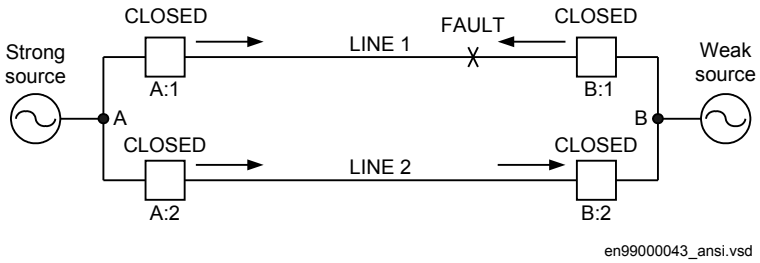

Figure 301: Initial condition

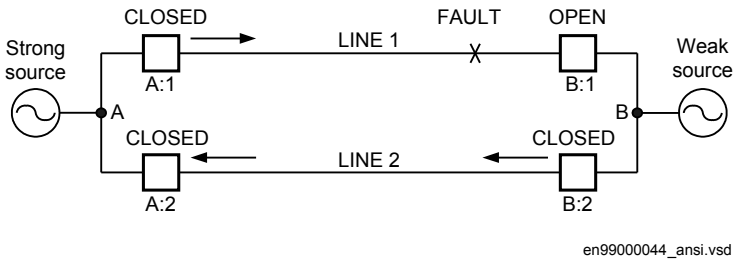

Figure 302: Current distribution after the breaker at B:1 is opened

When breaker on the parallel line operates, the fault current on the non faulty line is reversed. The IED at B:2 recognizes now the fault in forward direction. Together with the remaining received signal it will trip the breaker in B:2. To ensure that this does not occur, the permissive overreaching function needs to be blocked by IRVL, until the received signal is reset.

The IED at remote end, where the forward direction element was initially activated, must reset before the send signal is initiated from B:2. The delayed reset of output signal IRVL also ensures the send signal from IED B:2 is held back until the forward direction element is reset in IED A:2.

Weak-end infeed logic

Figure 303 shows a typical system condition that can result in a missing operation. Note that there is no fault current from node B. This causes that the IED at B cannot detect the fault and trip the breaker in B. To cope with this situation, a selectable weak-end infeed logic is provided for the permissive overreaching scheme.

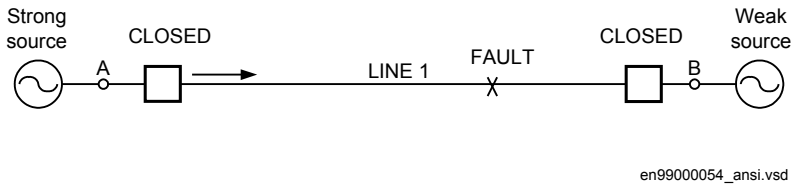

Figure 303: Initial condition

3.13.6.2 Setting guidelines

The parameters for the current reversal and weak-end infeed logic for residual overcurrent protection function are set via the local HMI or PCM600.

Current reversal

The current reversal function is set on or off by setting the parameter *CurrRev* to *Enabled* or *Disabled*. Time delays shall be set for the timers *tPickUpRev* and *tDelayRev*.

tPickUpRev is chosen shorter (<80%) than the breaker opening time, but minimum 20 ms.

tDelayRev is chosen at a minimum to the sum of protection reset time and the communication reset time. A minimum *tDelayRev* setting of 40 ms is recommended.

The reset time of the directional residual overcurrent protection (EF4PTOC) is typically 25 ms. If other type of residual overcurrent protection is used in the remote line end, its reset time should be used.

The signal propagation time is in the range 3 – 10 ms/km for most types of communication media. In communication networks small additional time delays are added in multiplexers and repeaters. Theses delays are less than 1 ms per process. It is often stated that the total propagation time is less than 5 ms.

When a signal arrives or ends there is a decision time to be added. This decision time is highly dependent on the interface between communication and protection used. In many cases external interface (teleprotection equipment) is used. This equipment makes a decision and gives a binary signal to the protection device. In case of analog

teleprotection equipment typical decision time is in the range 10 – 30 ms. For digital teleprotection equipment this time is in the range 2 – 10 ms.

If the teleprotection equipment is integrated in the protection IED the decision time can be slightly reduced.

Below the principle time sequence of signaling at current reversal is shown.

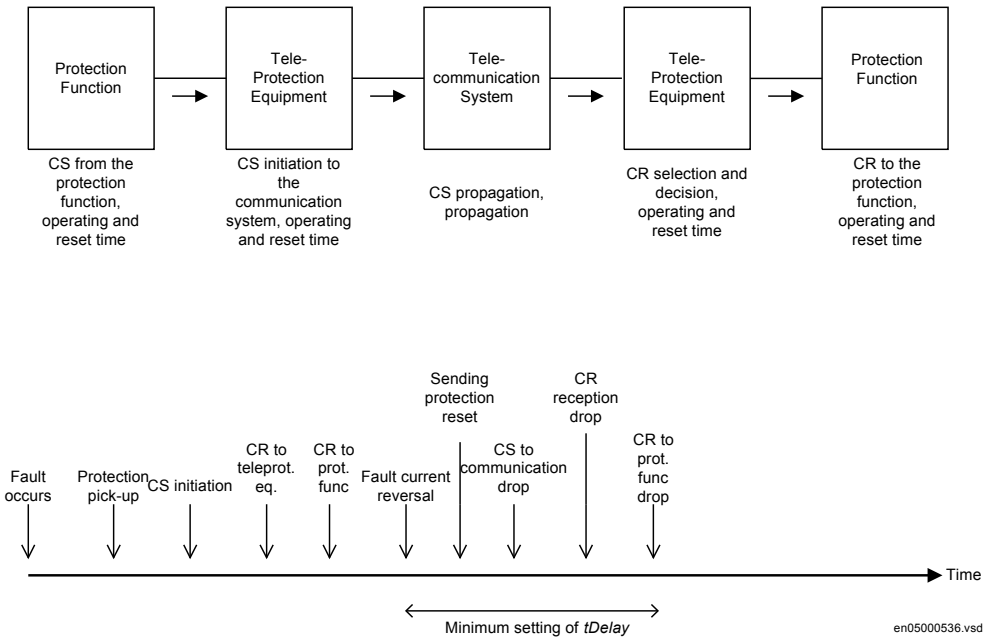

Figure 304: Time sequence of signaling at current reversal

Weak-end infeed

The weak-end infeed can be set by setting the parameter *WEI* to *Off*, *Echo* or *Echo & Trip*. Operating zero sequence voltage when parameter *WEI* is set to *Echo & Trip* is set with 3V0PU.

The zero sequence voltage for a fault at the remote line end and appropriate fault resistance is calculated.

To avoid unwanted trip from the weak-end infeed logic (if spurious signals should occur), set the operate value of the broken delta voltage level detector ($3V_0$) higher than the maximum false network frequency residual voltage that can occur during normal service conditions. The recommended minimum setting is two times the false zero-sequence voltage during normal service conditions.

3.13.6.3 Setting parameters

Table 193: ECRWPSCH (85) Group settings (basic)

Name	Values (Range)	Unit	Step	Default	Description
CurrRev	Disabled Enabled	-	-	Disabled	Operating mode of Current Reversal Logic
tPickUpRev	0.000 - 60.000	s	0.001	0.020	Pickup time for current reversal logic
tDelayRev	0.000 - 60.000	s	0.001	0.060	Time Delay to prevent Carrier send and local trip
WEI	Disabled Echo Echo & Trip	-	-	Disabled	Operating mode of WEI logic
tPickUpWEI	0.000 - 60.000	s	0.001	0.000	Coordination time for the WEI logic
VBase	0.05 - 2000.00	kV	0.05	400.00	Base setting for voltage level
3V0PU	5 - 70	%VB	1	25	Neutral voltage setting for fault conditions measurement

3.13.7 Current reversal and weak-end infeed logic for phase segregated communication ZC1WPSCH (85)

Function description	IEC 61850 identification	IEC 60617 identification	ANSI/IEEE C37.2 device number
Current reversal and weak-end infeed logic for phase segregated communication	ZC1WPSCH	-	85

3.13.7.1 Application

To achieve fast fault clearing for a fault on the part of the line not covered by the instantaneous zone 1, the stepped distance protection function can be supported with logic that uses communication channels.

For the phase segregated communication logic three channels in each direction, which can transmit an on/off signal is required.

The performance and security of this function is directly related to the transmission channels speed, and security against false or lost signals. For this reason special communication channels are used for this purpose. When power line carrier is used for communication, these special channels are strongly recommended due to the communication disturbance caused by the primary fault.

Communication speed, or minimum time delay, is always of utmost importance because the purpose for using communication is to improve the total tripping speed of

the scheme. To avoid false signals that could cause false tripping, it is necessary to pay attention to the security of the communication channel. At the same time it is important pay attention to the communication channel dependability to ensure that proper signals are communicated during power system faults, the time during which the protection schemes must perform their tasks flawlessly.

The logic supports the following communications schemes; -blocking scheme, -permissive schemes (overreach and underreach) and - direct intertrip.

A permissive scheme is inherently faster and has better security against false tripping than a blocking scheme. On the other hand, permissive scheme depends on a received CR signal for a fast trip, so its dependability is lower than that of a blocking scheme.

When single-phase tripping is required on parallel lines, an unwanted three-phase trip can occur for simultaneous faults near the line end (typical last 20%). Simultaneous faults are one fault on each of the two lines but in different phases, see figure 305. When simultaneous faults occur, the phase selectors at the remote protection IED - relative to the faults - cannot discriminate between the fault on the protected line and on the parallel line. The phase selector must be set to cover the whole line with a margin and will also detect a fault on the parallel line. Instantaneous phase-selective tripping for simultaneous faults close to line end is not possible with the information that is available locally in the remote protection IEDs relative to the faults. The protection IED near the faults detects the faults on the protected line as a forward fault, and on the parallel line in reverse direction. The directional phase selector in the two IEDs near the faults can discriminate between the faults and issue correct single-phase tripping commands. [Flowing Object]

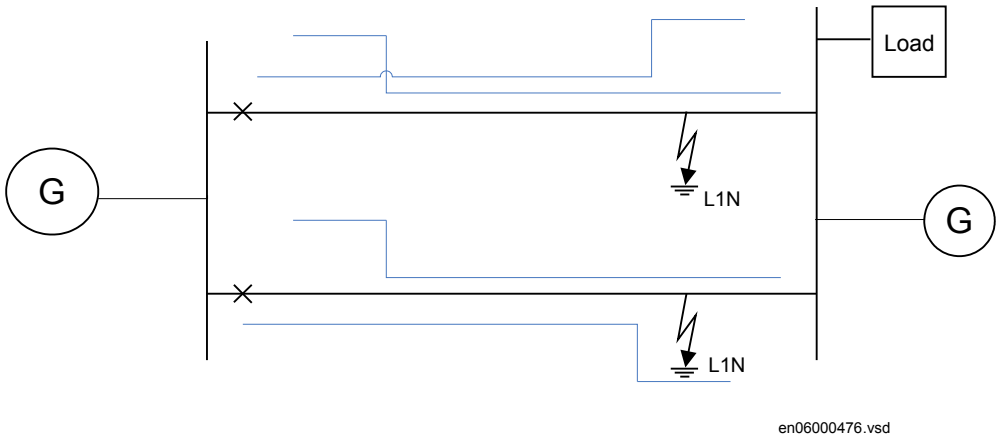

Figure 305: Simultaneous faults on two parallel lines.

By using phase-segregated channels for the communication scheme, the correct phase information in the protection IED near the faults can be transferred to the other side

protection IED. A correct single-phase trip can be achieved on both lines and at both line IEDs.

The phase-segregated communication scheme requires three individual channels between the protection IEDs on each line in both directions. In case of single-phase faults, only one channel is activated at a time. But in case of multi-phase faults, two or three channels are activated simultaneously.

The below description for the schemes generally presents one of the three identical phases.

When only one channel is available in each direction, use the optionally available three phase communication scheme logic (ZCOM). Note that this logic can issue an unwanted three-phase trip at the described simultaneous faults close to one line end.

Blocking schemes

In blocking scheme a reverse looking zone is used to send a block signal to remote end to block an overreaching zone. Since the scheme is sending the blocking signal during conditions where the protected line is healthy, it is common to use the line itself as communication media (PLC). The scheme can be used on all types of line length.

The blocking scheme is very dependable because it will operate for faults anywhere on the protected line if the communication channel is out of service. Conversely, it is less secure than permissive schemes because it will trip for external faults within the reach of the tripping function if the communication channel is out of service. Inadequate speed or dependability can cause spurious tripping for external faults. Inadequate security can cause delayed tripping for internal faults. To secure that the carrier send signal will arrive before the zone used in the communication scheme will trip, the trip is released first after the time delay *tCoord* has elapsed. The setting of *tCoord* must be set longer than the maximum transmission time of the channel. A security margin of at least 10 ms should be considered.

The timer *tSendMin* for prolonging the carrier send signal is proposed to set to zero in blocking schemes.

Permissive schemes

In permissive scheme, permission to trip is sent from local end to remote end(s) that is, protection at local end has detected a fault on the protected object. The received signal(s) is combined with an overreaching zone and gives an instantaneous trip if the received signal is present during the time the chosen zone is detected a fault in forward direction. Either end may send a permissive (or command) signal to trip to the other end(s), and the teleprotection equipment needs to be able to receive while transmitting.

Depending on if the sending signal(s) is issued by underreaching or overreaching zone, it is divided into Permissive underreach (PUR) or Permissive overreach (POR) scheme.

Permissive underreach scheme

Permissive underreach scheme is not suitable to use on short line length due to difficulties for distance protection measurement in general to distinguish between internal and external faults in those applications. The underreaching zones at local and remote end(s) must overlap in reach to prevent a gap between the protection zones where faults would not be detected. If the underreaching zone do not meet required sensitivity due to for instance fault infeed from remote end blocking or permissive overreach scheme should be considered.

The carrier received signal (CR) must be received when the overreaching zone is still activated to achieve an instantaneous trip. In some cases, due to the fault current distribution, the overreaching zone can operate only after the fault has been cleared at the IED nearest to the fault.

There is a certain risk that in case of a trip from an independent tripping zone, the zone issuing the carrier send signal (CS) resets before the overreaching zone has operated at the remote IED. To assure a sufficient duration of the received signal (CR), the send signal (CS), can be prolonged by a *tSendMin* reset timer. The recommended setting of *tSendMin* is 100 ms. Since the received communication signal is combined with the output from an overreaching zone, there is less concern about false signal causing an incorrect trip. Therefore set the timer *tCoord* to zero.

Failure of the communication channel does not affect the selectivity, but delays tripping at one end(s) for certain fault locations.

Permissive overreach scheme

In permissive overreach scheme there is an overreaching zone that issue the carrier send signal. At remote end the received signal together with activating of an overreaching zone gives instantaneous trip of the protected object. The overreaching zone used in the teleprotection scheme must be activated at the same time as the received signal is present. The scheme can be used for all type line lengths.

In permissive overreach schemes, the communication channel plays an essential roll to obtaining fast tripping at both ends. Failure of the communication channel may affect the selectivity and delay tripping at one end at least, for faults anywhere along the protected circuit. Teleprotection operating in permissive overreach scheme must beside the general requirement of fast and secure operation also requirement on dependability must be considered. Inadequate security can cause unwanted tripping for external faults. Inadequate speed or dependability can cause delayed tripping for internal faults or even unwanted operations.

This scheme may use virtually any communication media that is not adversely affected by electrical interference from fault generated noise or by electrical phenomena, such as lightning, that cause faults. Communication media that uses metallic path are particularly subjected to this type of interference, therefore, they must be properly shielded or otherwise designed to provide an adequate communication signal during

power system faults. At the permissive overreaching scheme, the carrier send signal (CS) might be issued in parallel both from an overreaching zone and an underreaching, independent tripping zone. The CS signal from the overreaching zone must not be prolonged while the CS signal from zone 1 can be prolonged.

To secure correct operations of current reversal logic in case of parallel lines, when applied, the carrier send signal CS shall not be prolonged. So set the *tSendMin* to zero in this case. There is no need to delay the trip at receive of the carrier signal, so set the timer *tCoord* to zero.

Unblocking scheme

Unblocking scheme cannot be used at phase segregated communication schemes as a failure of the communication channel cannot give any information about which phase/phases have a fault.

Intertrip scheme

In some power system applications, there is a need to trip the remote end breaker immediately from local protections. This applies, for instance, when transformers or reactors are connected to the system without circuit-breakers or for remote tripping following operation of breaker failure protection.

In intertrip scheme, the carrier send signal is initiated by an underreaching zone or from an external protection (transformer or reactor protection). At remote end, the received signals initiate a trip without any further protection criteria. To limit the risk for unwanted trip due to spurious sending of signals, the timer *tCoord* should be set to 10-30 ms dependant on type and security of the communication channel.

The general requirement for teleprotection equipment operating in intertripping applications is that it should be very secure and very dependable, since both inadequate security and dependability may cause unwanted operation. In some applications the equipment shall be able to receive while transmitting, and commands may be transmitted over longer time period than for other teleprotection systems.

3.13.7.2 Setting guideline

The parameters for the scheme communication logic function are set via the local HMI or PCM600.

Configure the zones used for the CS carrier send and for scheme communication tripping by using the Application configuration tool.

The recommended settings of *tCoord* timer are based on maximal recommended transmission time for analog channels according to IEC 60834-1. It is recommended to coordinate the proposed settings with actual performance for the teleprotection equipment to get optimized settings.

Permissive underreach scheme

Set *Operation* = On

Set *Scheme type* = Permissive UR

Set *tCoord* = 0 ms

Set *tSendMin* = 0.1 s

Set *Unblock* = Disable

Set Unblock = (Loss of guard signal will give both trip and alarm, chose *NoRestart* if only trip is required)

Set *tSecurity* = 0.035 s

Permissive overreach scheme

Set *Operation* = On

Set *Scheme type* = Permissive OR

Set tCoord = 0 ms

Set *tSendMin* = 0.1 s

Set *Unblock* = Disable

Set *Unblock* = Restart (Loss of guard signal will give both trip and alarm, chose *NoRestart* if only trip is required)

Set *tSecurity* = 0.035 s

Blocking scheme

Set *Operation* = On

Set *Scheme type* = Blocking

Set *tCoord* 25 ms (10ms + maximal transmission time)

Set *tSendMin* = 0 s

Set *Unblock* = Disable

Set *tSecurity* = 0.035 s

Intertrip scheme

Set *Operation* = On

Set *Scheme type* = Intertrip

Set *tCoord* 50 ms (10 ms + maximum transmission time)

Set *tSendMin* = 0.1 s

Set *Unblock* = Disable

Set *tSecurity* = 0.015 s

3.13.7.3 Setting parameters

Table 194: ZC1WPSCH (85) Group settings (basic)

Name	Values (Range)	Unit	Step	Default	Description
VBase	0.05 - 2000.00	kV	0.05	400.00	Base setting for Voltage level
OperCurrRev	Disabled Enabled	-	-	Disabled	Operating mode of Current Reversal Logic
tPickUpRev	0.000 - 60.000	s	0.001	0.020	Pickup time for current reversal logic
tDelayRev	0.000 - 60.000	s	0.001	0.060	Time Delay to prevent Carrier send and local trip
OperationWEI	Disabled Echo Echo & Trip	-	-	Disabled	Operating mode of WEI logic
VPGPickup	10 - 90	%VB	1	70	Phase to Ground voltage for detection of fault condition
PU27PP	10 - 90	%VB	1	70	Phase to Phase voltage for detection of fault condition
tPickUpWEI	0.000 - 60.000	s	0.001	0.010	Coordination time for the WEI logic

3.13.8 Direct transfer trip logic

3.13.8.1 Application

The main purpose of the direct transfer trip (DTT) scheme is to provide a local criterion check on receiving a transfer trip signal from remote end before tripping the local end CB. A typical application for this scheme is a power transformer directly connected, without circuit breaker, to the feeding line. Suppose that an internal symmetrical or non-symmetrical transformer fault appears within the protective area of the transformer differential protection. The line protection will, in some cases, not recognize the fault. The transformer differential protection operates for the internal fault and initiates a trip of the secondary side circuit breaker. It also sends the carrier signal to the remote line end in order to open the line circuit breaker.

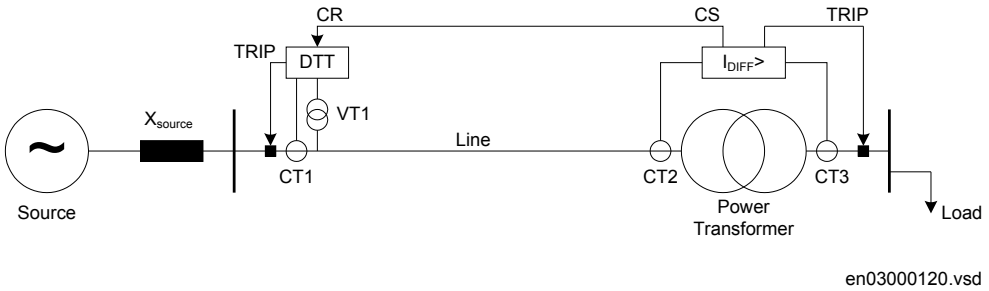

Figure 306:

Usually carrier receive (CR) signal trips the line circuit breaker directly in normal direct transfer trip scheme (DTT) but in such cases security would be compromised, due to the risk of a false communication signal. A false CR signal could unnecessarily trip the line. Therefore, a local criterion is used, to provide an additional trip criterion, at the same location as the line circuit breaker. The local criterion must detect the abnormal conditions at the end of the protected line and transformer and permit the CR signal to trip the circuit breaker.

Another application is a line connected shunt reactor, where the reactor is solidly connected to the line. Shunt reactors are generally protected by differential protection, which operates the local line circuit breaker and sends a transfer trip command to the remote line end.

The line protection in the remote end is much less sensitive than the differential protection and will only operate for low impedance reactor faults very close to the high voltage terminal. To avoid frequent line trips at the local end due to false transfer trip signals, a local criterion check is required to be added at the local end.

The trip signal from local criterion will ensure the fault at the remote end and release the trip signal to the local side circuit breaker. The local criterion must detect the abnormal conditions and permit the CR signal to trip the circuit breaker.

DTT scheme comprises following local criteria checks as shown in Figure 307.

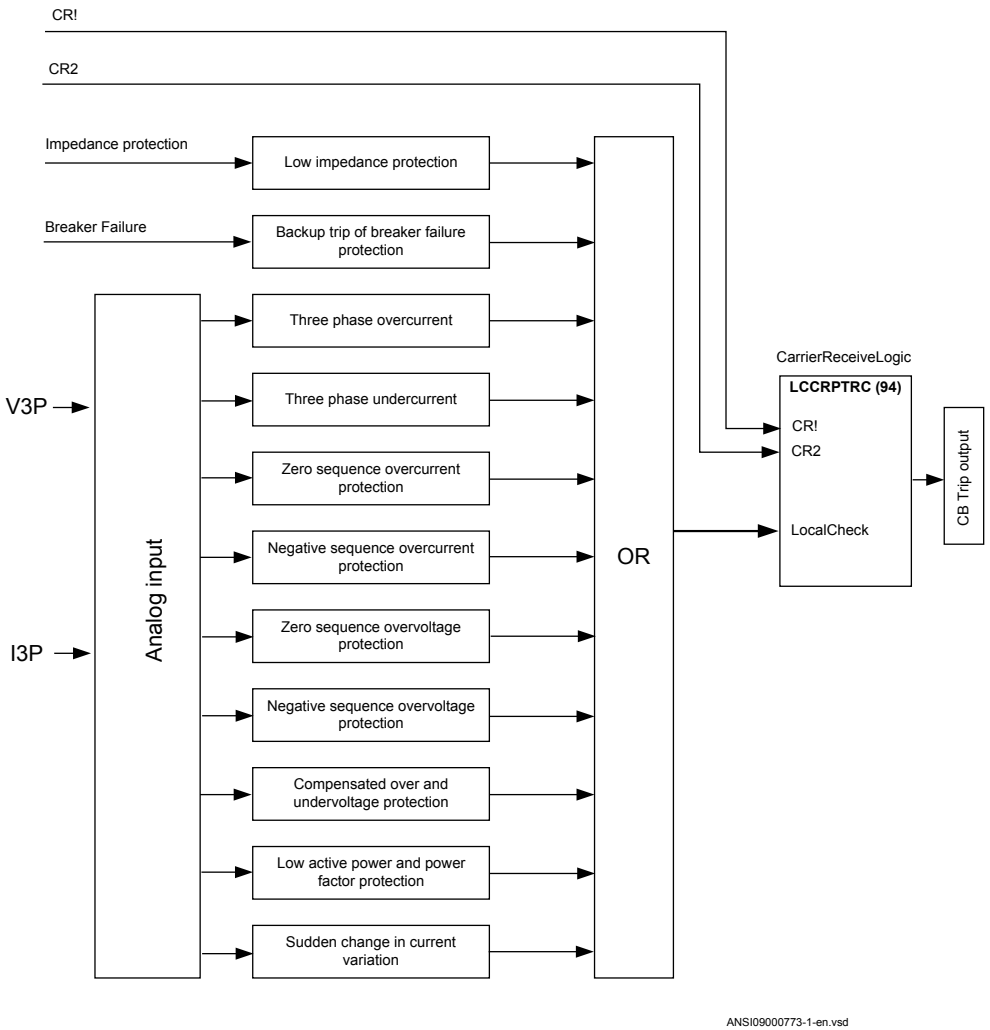

Figure 307: DTT scheme

3.13.8.2 Setting guidelines

Setting guidelines for Direct transfer trip functions

3.13.8.3 Low active power and power factor protection LAPPGAPC (37_55)

Function description	IEC 61850 identification	IEC 60617 identification	ANSI/IEEE C37.2 device number
Low active power and power factor protection	LAPPGAPC	-	37_55

Application

Low active power and power factor protection (LAPPGAPC, 37_55) is one of the local criteria to be checked in direct transfer trip (DTT) scheme. In LAPPGAPC (37_55), active power and power factor are calculated from the voltage and current values at this end. On detection of low active power or low power factor condition, the trip output will be set. All the calculation and comparison are done per phase.

If there is a fault and the remote end circuit breaker is tripped, a carrier signal is sent to the local end and the active power in respective phases will decrease. Hence, detection of low active power in at least one of the phases would be one of the factors to ascertain the fault at other end.

The function has two modes, '1 out of 3' and '2 out of 3'. '1 out of 3' mode ensures that there is low active power in at least one of the three phases, while the '2 out of 3' mode the low power is ensured in at least two phases simultaneously before sending the trip signal.

Line which is tripped at the remote end will have low active power flowing through it which also results in low power factor in the respective phase. A low power factor criterion could also be an added check of the local criterion in DTT. In this function phase wise power factor is calculated, and a comparison is made for the low power factor condition to give phase segregated start and trip.

Setting guidelines

IBase: Base phase current in primary A. This current is used as reference. If not possible to find a suitable value, the rated current of the protected object is chosen. In line applications the primary rated current of the current transformer is recommended.

VBase: Base phase to phase voltage in primary kV. This voltage is used as reference. If not possible to find a suitable value, the rated voltage of the protected object is chosen. In line applications the primary rated voltage of the voltage transformer is recommended.

SBase: Base apparent power given in MVA. This power is used as reference. The rated power must be given as:

$$SBase = \sqrt{3} \cdot VBase \cdot IBase$$

(Equation 418)

OperationLAP: Used to set the low power function *Enabled* or *Disabled*.

OpModeSel: Can be set *2 out of 3* or *1 out of 3*. If *1 out of 3* is set, the function will send TRIP signal if one or more phases have low power. If *2 out of 3* is set, the function will send TRIP signal if two or more phases have low power. When the remote breaker has opened, there should theoretically be zero power at the protection measurement point. However, when fault current is fed to the fault point the power loss

in the fault will be detected. For operation for all unsymmetrical faults *1 out of 3* should be selected.

PU_LAP: Level of low active power detection, given in % of *SBase*. This parameter should be set as low as possible to avoid activation during low load conditions at undisturbed network operation. The measurement is blocked for current levels below 3 % of *IBase* and 30% of *VBase*. All outputs are blocked.

tdelay_LAP: Time delay for trip in case of low active power detection.

OperationLPF: Used to set the low power factor function *Enabled* or *Disabled*.

PU_LPF: Level of low power factor detection. The setting should be set lower than the lowest power factor at undisturbed network operation. A value lower than *0.4* is normally sufficient.

tdelay_LPD: Time delay for trip in case of low power factor detection.

Setting parameters

Table 195: LAPPGAPC (37_55) Group settings (basic)

Name	Values (Range)	Unit	Step	Default	Description
Operation	Disabled Enabled	-	-	Disabled	Operation Enable/Disable
IBase	1 - 99999	A	1	3000	Base Setting for current in A
VBase	0.05 - 2000.00	kV	0.05	400.00	Base setting for voltage in kV
SBase	1 - 50000	MVA	1	1200	Base Setting for power in MVA
OperationLAP	Disabled Enabled	-	-	Disabled	Operation low active power Enable/disable
OpModeSel	2 out of 3 1 out of 3	-	-	2 out of 3	Trip mode low active power 2out of 3 or 1 out of 3
PU_LAP	2.0 - 100.0	%SB	0.1	5.0	3 Phase pick up value for low active power
tdelay_LAP	0.000 - 60.000	s	0.001	0.010	Time delay to operate for low active power
OperationLPF	Disabled Enabled	-	-	Disabled	Operation low power factor enable/disable
PU_LPF	0.00 - 1.00	-	0.01	0.40	Pick up for low power factor
tdelay_LPD	0.000 - 60.000	s	0.001	0.010	Time delay to operate for low power factor

3.13.8.4 Compensated over and undervoltage protection COUVGAPC (59_27)

Function description	IEC 61850 identification	IEC 60617 identification	ANSI/IEEE C37.2 device number
Compensated over and undervoltage protection	COUVGAPC	-	59_27

Application

Compensated over and undervoltage protection (COUVGAPC, 59_27) function calculates the remote end voltage of the transmission line utilizing local measured voltage, current and with the help of transmission line parameters, that is, line resistance, reactance, capacitance and local shunt reactor.

For protection of long transmission line for in zone faults this function can be incorporated with other local criteria checks within direct transfer trip logic to ensure tripping of the line only under abnormal conditions and to avoid unnecessary tripping during healthy operation of the line (for example, lightly loaded or unloaded).

Long transmission line draws substantial quantity of charging current. If such a line is open circuited or lightly loaded at the remote end, the voltage at remote end may exceeds local end voltage. This is known as Ferranti effect and is due to the voltage drop across the line inductance (due to charging current) being in phase with the local end voltages. Both capacitance and inductance are responsible for this phenomenon. The capacitance (and charging current) is negligible in short line but significant in medium line and appreciable in long line. The percentage voltage rise due to the Ferranti effect between local end and remote end voltage is proportional to the length of the line and the properties of the transmission line. The Ferranti effect is symmetrical between all three phases for normal balanced load condition. The overvoltage caused by Ferranti effect can be reduced by drawing larger load through the line or switching in the shunt reactor (connected either to line or to remote bus) at the remote end. The calculated compensated voltage at the local end can detect such overvoltage phenomenon.

The vector representation of local end and remote end voltages are shown below:

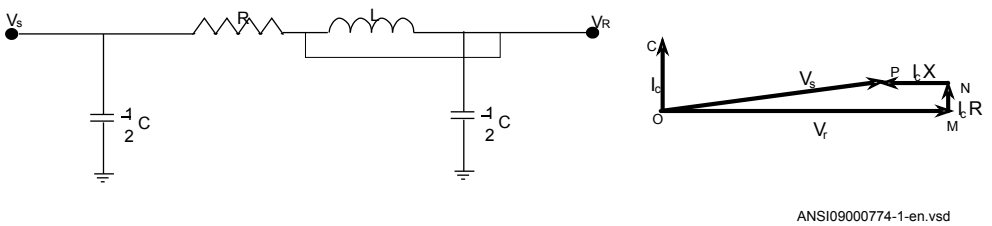

Figure 308: Vector diagram for local end and remote end voltage at no power transfer conditions

Where:

OM	Remote end voltage Vr
OP	Local end voltage Vs
OC	Current drawn by capacitance (Ic)
MN	Resistance drop (IcR)
NP	Inductive reactance drop (IcX)

If there is a transmission line that is opened at the remote end or radial or remote end source is weak, then a fault anywhere on the line can result into undervoltage at the remote end. There can be undervoltage at remote end also due to heavy loading or poor power factor on lagging side. A fault in a line connected beyond the remote end bus can also produce undervoltage at remote end. The compensated voltage calculated at the local end can detect such undervoltages. The undervoltage caused by a fault can be asymmetrical while that due to overloading is symmetrical.

The trip signal issued by compensated over and under voltage function should be accompanied by a transfer trip signal received from the remote end. The trip signal should be used as a release signal which can permit a remote transfer trip to be used to trip the local circuit breaker.

Setting of over voltage and under voltage levels for compensated voltage should be same as the remote end over and under voltage levels. This will ensure proper operation of voltage protection of the transmission line.

The definite delay time for compensated over and under voltage can be shorter than that at remote end, but not too short. A short delay time would result in frequent operation of compensated over and under voltage function without corresponding transfer trip received from remote end.

Switchable shunt reactors located on both line terminals and substation bus-bars are commonly used on long radial EHV transmission networks for the purpose of voltage control during daily/seasonal load variations.

The function can internally correct for the current through the local shunt reactor. The setting *EnShuntReactor* should be *Enabled* if there is a shunt reactor on the line. Change in this setting will be effected only when IED is restarted. Hence this setting should be configured during installing and then connection and disconnection of shunt reactor breaker should be handled by the input SWIPOS. In figure 309, if the measured current I_S is configured in the IED, then internal shunt reactor correction should be used (The setting *EnShuntReactor* should be *Enabled* if there is a shunt reactor on the line. Change in this setting will reboot the IED to take effect of X_{SR}. Hence this setting should be configured during installing and then connection and disconnection of shunt reactor breaker should be handled by the input SWIPOS). Also, for shunt reactor connected through the breaker or disconnector, status of the same must be configured in the IED as shown in figure 309.

Frequently, the input current to the line protection IED is already corrected for the current through the local shunt reactor. In figure 309 if the measured current I_L is connected to the IED then even if local shunt reactor is present its correction should not be done inside the function, otherwise this will result into incorrect calculation for compensated voltage.

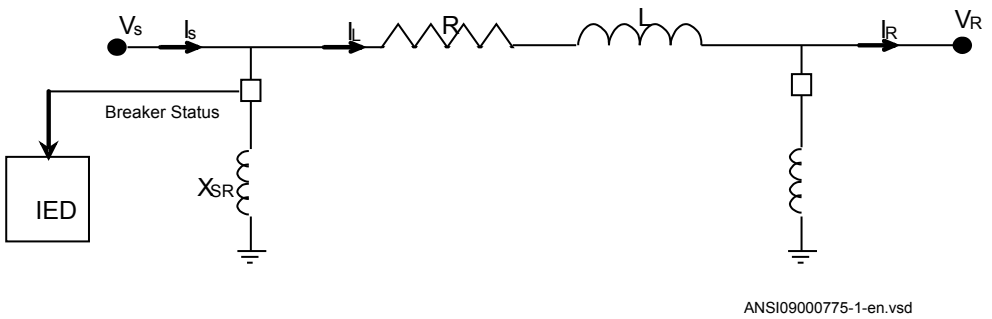

Figure 309: Breaker status configured with IED

Setting guidelines

VBase: Base phase to phase voltage in primary kV. This voltage is used as reference for the setting. If it is possible to find a suitable value, the rated voltage of the protected object is chosen. In line applications the primary rated voltage of the voltage transformer is recommended.

OperationUV: Used to set the under-voltage function *Enabled* or *Disabled*.

27_COMP: Level of low voltage detection, given in % of *VBase*. This setting should be based on fault calculations to find the voltage decrease in case of a fault at the most remote point where the direct trip scheme shall be active. The phase voltages shall be calculated for different types of faults (single phase-to-ground, phase-to-phase to ground, phase-to-phase and three-phase short circuits) at different switching states in the network.

tUV: Time delay for trip in case of low voltage detection

OperationOV: Used to set the over-voltage function *Enabled* or *Disabled*.

59_COMP: Level of high voltage detection, given in % of *VBase*. This setting should be based on fault calculations to find the voltage increase in case of an ground fault at the most remote point where the direct trip scheme shall be active. The phase voltages shall be calculated for different types of faults (single phase-to-ground and phase-to-phase to ground) at different switching states in the network. The setting must be higher than the largest phase voltage that can occur during non-disturbed network operation.

tOV: Time delay for trip in case of high voltage detection.

R1: Positive sequence line resistance given in ohm.

X1: Positive sequence line reactance given in ohm.

Xc: Half the value of the equivalent Positive sequence capacitive shunt reactance of the line given in ohm.

EnShuntReactor: Set *Enabled* or *Disabled* to enable the charging current to be involved in the voltage compensation calculation.

Xsh: Per phase reactance of the line connected shunt reactor given in ohm.

Setting parameters

Table 196: COUVGAPC (59_27) Group settings (basic)

Name	Values (Range)	Unit	Step	Default	Description
Operation	Disabled Enabled	-	-	Disabled	Operation Enable/Disable
VBase	0.05 - 2000.00	kV	0.05	400.00	Base setting for voltage in kV
OperationUV	Disabled Enabled	-	-	Enabled	Operation compensated under voltage Off/On
27_COMP	1 - 100	%VB	1	70	Compensated under voltage level in % of VBase
tUV	0.000 - 60.000	s	0.001	1.000	Time delay to trip under voltage
OperationOV	Disabled Enabled	-	-	Enabled	Operation compensated over voltage Off/On
59_COMP	1 - 200	%VB	1	120	Compensated over voltage level in % of VBase
tOV	0.000 - 60.000	s	0.001	5.000	Time delay to trip over voltage

Table 197: COUVGAPC (59_27) Group settings (advanced)

Name	Values (Range)	Unit	Step	Default	Description
HystAbs	0.0 - 100.0	%VB	0.1	0.5	Hysteresis absolute for compensated over/ under voltage in % of VBase

Table 198: COUVGAPC (59_27) Non group settings (basic)

Name	Values (Range)	Unit	Step	Default	Description
R1	0.01 - 3000.00	ohm	0.01	5.00	Positive sequence resistance per phase for the line in ohm
X1	0.01 - 3000.00	ohm	0.01	40.00	Positive sequence reactance per phase for the line in ohm
Xc	1.00 - 10000.00	ohm	0.01	1000.00	Half of equivalent capacitive reactance per phase in ohm
EnShuntReactor	Disabled Enabled	-	-	Enabled	Enable setting if shunt reactor connected in line
Xsh	1.00 - 10000.00	ohm	0.01	1500.00	Per phase reactance of local Shunt Reactor in ohm

3.13.8.5 Sudden change in current variation SCCVPTOC (51)

Function description	IEC 61850 identification	IEC 60617 identification	ANSI/IEEE C37.2 device number
Sudden change in current variation	SCCVPTOC	-	51

Application

The Sudden change in current variation (SCCVPTOC, 51) function is fast way of finding any abnormality in line currents. When there is a fault in the system then current changes faster than the voltage. SCCVPTOC (51) finds abnormal condition based on phase-to-phase current variation. The main application is as one of local criterion to increase security when transfer trips are used.

Setting guidelines

IBase: Base phase current in primary A. This current is used as reference for the setting. If not possible to find a suitable value, the rated current of the protected object is chosen. In line applications the primary rated current of the current transformer is recommended.

IPickup: Level of fixed threshold given in % of *IBase*. This setting should be based on fault calculations to find the current increase in case of a fault at the most remote point where the direct trip scheme shall be active. The phase to phase current shall be calculated for different types of faults (single phase to ground, phase to phase to ground, phase to phase and three phase short circuits) at different switching states in the network. In case of switching of large objects (shunt capacitor banks, transformers, etc.) large change in current can occur. The *IPickup* setting should be larger than estimated switch in currents measured by the protection.

tHold: Hold time (minimum signal duration). This time setting shall be long enough to assure that the CR-signal is received. The default value *0.5* s is recommended.

tDelay: Trip time is set according to the individual application.

Setting parameters

Table 199: SCCVPTOC (51) Group settings (basic)

Name	Values (Range)	Unit	Step	Default	Description
Operation	Disabled Enabled	-	-	Disabled	Operation Off/On
IBase	1 - 99999	A	1	3000	Base setting for current in A
IPickup	0 - 100	%IB	1	20	Fixed threshold setting in % of IBase
tHold	0.000 - 60.000	s	0.001	0.500	Hold time for operate signals

Table 200: SCCVPTOC (51) Group settings (advanced)

Name	Values (Range)	Unit	Step	Default	Description
tDelay	0.000 - 0.005	s	0.001	0.002	Time delay for start and trip signals

3.13.8.6 Carrier receive logic LCCRPTRC (94)

Function description	IEC 61850 identification	IEC 60617 identification	ANSI/IEEE C37.2 device number
Carrier receive logic	LCCRPTRC	-	94

Application

In the Direct transfer trip scheme, the received CR signal gives the trip to the circuit breaker after checking certain local criteria functions in order to increase the security of the overall tripping functionality. Carrier receive logic (LCCRPTRC, 94) checks for the CR signals and passes the local check trip to the circuit breaker.

LCCRPTRC (94) receives the two CR signals, local criterion trip signals and releases the trip to the circuit breaker based on the input signal status and mode of operation. There are two modes of operation in CR channel logic. In the case of '1 out of 2' mode if any one of the two CR is received then the trip signal coming from the local criterion is released, and in case of '2 out of 2' mode both the CR's should be received to release the trip signal coming from the local criterion. Both the CR signals are validated using the channel error binary flag.

Setting guidelines

ChMode: This parameter can be set *1 out of 2* or *2 out of 2*. The parameter gives the conditions for operation of the transfer trip function, i.e. if only one CR signal is required or of both CR signals are required for trip (in addition to local criteria). If only one channel is available the parameter must be set *1 out of 2*. If parallel channels are available *2 out of 2* gives a high degree of security but can decrease the dependability if one channel is faulted.

tOperate: Trip time is normally set maximum *0.1* s.

Setting parameters

Table 201: LCCRPTRC (94) Group settings (basic)

Name	Values (Range)	Unit	Step	Default	Description
Operation	Disabled Enabled	-	-	Disabled	Operation Disabled/Enabled
ChMode	2 out of 3 1 Out Of 2	-	-	2 out of 3	Setting to select 1/2 or 2/2 mode
tOperate	0.000 - 60.000	s	0.001	0.100	Time delay to operate

3.13.8.7 Negative sequence overvoltage protection LCNSPTOV (47)

Function description	IEC 61850 identification	IEC 60617 identification	ANSI/IEEE C37.2 device number
Negative sequence overvoltage protection	LCNSPTOV	-	47

Application

Negative sequence symmetrical components are present in all types of fault condition. In case of three phase short circuits the negative sequence voltages and current have transient nature and will therefore decline to zero after some periods.

Negative sequence overvoltage protection (LCNSPTOV, 47) is a definite time stage comparator function. The negative sequence input voltage from the SMAI block is connected as input to the function through a group connection V3P in PCM600. This voltage is compared against the preset value and a pickup signal will be set high if the input negative sequence voltage is more than the preset value *Pickup2*. Trip signal will be set high after a time delay setting of *tV2*. There is a BLOCK input which will block the complete function. BLKTR will block the trip output. Negative sequence voltage is also available as service value output U2.

Setting guidelines

VBase: Base phase to phase voltage in primary kV. This voltage is used as reference. If not possible to find a suitable value, the rated voltage of the protected object is chosen. In line applications the primary rated voltage of the voltage transformer is recommended.

Pickup2: Level of high negative sequence voltage detection given in % of *VBase*. This setting should be based on fault calculations to find the negative sequence voltage in case of a fault at the most remote point where the direct trip scheme shall be active. The negative sequence voltages shall be calculated for different types of faults (single phase to ground, phase to phase to ground and phase to phase short circuits) at different switching states in the network.

tV2: Time delay for trip in case of high negative sequence voltage detection. The trip function can be used as stand alone short circuit protection with a long time delay. The choice of time delay is depending on the application of the protection as well as network topology.

Setting parameters

Table 202: LCNSPTOV (47) Group settings (basic)

Name	Values (Range)	Unit	Step	Default	Description
Operation	Disabled Enabled	-	-	Disabled	Operation Enable/Disable
VBase	0.05 - 2000.00	kV	0.05	400	Base setting for voltage in kV
Pickup2	1 - 200	%VB	1	10	Negative sequence over voltage start value in %VBase
tV2	0.000 - 120.000	s	0.001	2.000	Time delay to operate

3.13.8.8 Zero sequence overvoltage protection LCZSPTOV (59N)

Function description	IEC 61850 identification	IEC 60617 identification	ANSI/IEEE C37.2 device number
Zero sequence overvoltage protection	LCZSPTOV	-	59N

Application

Zero sequence symmetrical components are present in all abnormal conditions involving ground. They have a considerably high value during ground faults.

Zero sequence overvoltage protection (LCZSPTOV, 59N) is a definite time stage comparator function. The Zero sequence input voltage from the SMAI block is connected as input to the function through a group connection V3P in PCM600. This voltage is compared against the preset value and a pickup signal will be set high if the input zero sequence voltage is more than the preset value *3V0PU*. Trip signal will be set high after a time delay setting of *t3V0*. BLOCK input will block the complete function. BLKTR will block the trip output . Zero sequence voltage will be available as service value output as 3V0.

Setting guidelines

VBase: This voltage is used as reference for the voltage setting.

The IED is fed from a normal voltage transformer group where the residual voltage is created from the phase to ground voltages within the protection software or the residual

voltage is fed from a broken delta-connected VT-group. The setting of analogue inputs always gives 3U0. Therefore set:

$$VBase = \frac{V_{ph-ph}}{\sqrt{3}}$$

(Equation 419)

3V0PU: Level of high zero sequence voltage detection given in % of *VBase*. This setting should be based on fault calculations to find the zero sequence voltage in case of a fault at the most remote point where the direct trip scheme shall be active. The zero sequence voltages shall be calculated for different types of ground faults (single phase to ground and phase to phase to ground short circuits) at different switching states in the network.

t3V0: Time delay for trip in case of high zero sequence voltage detection. The trip function can be used as stand alone ground fault protection with a long time delay. The choice of time delay is depending on the application of the protection as well as network topology.

Setting parameters

Table 203: LCZSPTOV (59N) Group settings (basic)

Name	Values (Range)	Unit	Step	Default	Description
Operation	Disabled Enabled	-	-	Disabled	Operation Disabled/Enabled
VBase	0.05 - 2000.00	kV	0.05	400	Base setting for voltage in kV
3V0PU	1 - 200	%VB	1	10	Zero sequence voltage start value in % of VBase
t3V0	0.000 - 120.000	s	0.001	2.000	Time delay to operate

3.13.8.9 Negative sequence overcurrent protection LCNSPTOC (46)

Function description	IEC 61850 identification	IEC 60617 identification	ANSI/IEEE C37.2 device number
Negative sequence overcurrent protection	LCNSPTOC	-	46

Application

Negative sequence symmetrical components are present in all types of fault condition.

Negative sequence overcurrent protection (LCNSPTOC, 46) is a definite time stage comparator function. The negative sequence input current from the SMAI block is

connected as input to the function through a group connection I3P in PCM600. This current is compared against the preset value and a pickup signal will be set high if the input negative sequence current is greater than the preset value *Pickup2*. Trip signal will be set high after a time delay setting of *tI2*. BLOCK input will block the complete function. BLKTR will block the trip output. Negative sequence current is available as service value output I2.

Setting guideline

IBase: Base phase current in primary A. This current is used as reference. If not possible to find a suitable value, the rated current of the protected object is chosen. In line applications the primary rated current of the current transformer is recommended.

Pickup2: Level of high negative sequence current detection given in % of *IBase*. This setting should be based on fault calculations to find the negative sequence current in case of a fault at the most remote point where the direct trip scheme shall be active. The negative sequence current shall be calculated for different types of faults (single phase to ground, phase to phase to ground and phase to phase short circuits) at different switching states in the network.

tI2: Time delay for trip in case of high negative sequence current detection. The trip function can be used as stand alone short circuit protection with a long time delay. The choice of time delay is depending on the application of the protection as well as network topology.

Setting parameters

Table 204: LCNSPTOC (46) Group settings (basic)

Name	Values (Range)	Unit	Step	Default	Description
Operation	Disabled Enabled	-	-	Disabled	Operation Disabled/Enabled
IBase	1 - 99999	A	1	3000	Base setting for current in A
Pickup2	1 - 2500	%IB	1	100	Negative sequence over current start value in % of IBase
tI2	0.000 - 60.000	s	0.001	0.000	Time delay to operate

3.13.8.10 Zero sequence overcurrent protection LCZSPTOC (51N)

Function description	IEC 61850 identification	IEC 60617 identification	ANSI/IEEE C37.2 device number
Zero sequence overcurrent protection	LCZSPTOC	-	51N

Application

Zero sequence symmetrical components are present in all abnormal conditions involving ground. They are having a considerably high value during ground faults.

Zero sequence overcurrent protection (LCZSPTOC, 51N) is a definite time stage comparator function. The zero sequence input current from the SMAI block is connected as input to the function through a group connection I3P in PCM600. This current is compared against the preset value and a pickup signal will be set high if the input zero sequence current is more than the preset value *3I0> PU*. Trip signal will be set high after a time delay setting of *t3I0*. BLOCK input will block the complete function. BLKTR will block the trip output. Zero sequence current is available as service value output 3I0.

Setting guidelines

IBase: Base phase current in primary A. This current is used as reference the setting. If it is possible to find a suitable value, the rated voltage of the protected object is chosen. In line applications the primary rated current of the current transformer is recommended.

3I0 PU : Level of high zero sequence current detection given in % of *IBase*. This setting should be based on fault calculations to find the zero sequence current in case of a fault at the most remote point where the direct trip scheme shall be active. The zero sequence current shall be calculated for different types of faults (single phase to ground and phase to phase to ground) at different switching states in the network.

t3I0: Time delay for trip in case of high zero sequence current detection. The trip function can be used as stand alone short circuit protection with a long time delay. The choice of time delay is depending on the application of the protection as well as network topology.

Setting parameters

Table 205: LCZSPTOC (51N) Group settings (basic)

Name	Values (Range)	Unit	Step	Default	Description
Operation	Disabled Enabled	-	-	Disabled	Operation Disabled/Enabled
IBase	1 - 99999	A	1	3000	Base setting for current in A
3I0 PU	1 - 2500	%IB	1	100	Zero sequence over current start value in % of IBase
t3I0	0.000 - 60.000	s	0.001	0.000	Time delay to operate

3.13.8.11 Three phase overcurrent LCP3PTOC (51)

Function description	IEC 61850 identification	IEC 60617 identification	ANSI/IEEE C37.2 device number
Three phase overcurrent	LCP3PTOC	-	51

Application

Three phase overcurrent (LCP3PTOC, 51) is designed for detecting over current conditions due to fault or any other abnormality in the system.

LCP3PTOC (51) could be used as a back up for other local criterion checks.

Setting guidelines

IBase: Base phase current in primary A. This current is used as reference the setting. If it is possible to find a suitable value, the rated current of the protected object is chosen. In line applications the primary rated current of the current transformer is recommended.

PU 51: Level of high phase current detection given in % of *IBase*. This setting can be based on evaluation of the largest current that can occur during non-faulted network operation: $I_{loadmax}$. Fault calculations where the smallest current at relevant faults gives: $I_{faultmin}$. The setting can be chosen: $I_{loadmax}$<*IOC*> <$I_{faultmin}$

tOC: Time delay for trip in case of high phase current detection. The trip function can be used as stand alone short circuit protection with a long time delay. The choice of time delay is depending on the application of the protection as well as network topology.

Setting parameters

Table 206: LCP3PTOC (51) Group settings (basic)

Name	Values (Range)	Unit	Step	Default	Description
Operation	Disabled Enabled	-	-	Disabled	Operation Enable / Disable
IBase	0 - 99999	A	1	3000	Base setting for current in A
PU 51	5 - 2500	%IB	1	1000	Start value for 3 phase over current in % IBase
tOC	0.000 - 60.000	s	0.001	0.020	Time delay to operate

3.13.8.12 Three phase undercurrent LCP3PTUC (37)

Function description	IEC 61850 identification	IEC 60617 identification	ANSI/IEEE C37.2 device number
Three phase undercurrent	LCP3PTUC	-	37

Application

Three phase undercurrent protection function (LCP3PTUC, 37) is designed for detecting loss of load conditions.

When the transformer or shunt reactor differential operates and the secondary side circuit breaker is tripped there will be very low current from this end of the line to the remote end.

LCP3PTUC (37) detects the above low current condition by monitoring the current and helps to trip the circuit breaker at this end instantaneously or after a time delay according to the requirement.

Setting guidelines

IBase: Base phase current in primary A. This current is used as reference the setting. If it is possible to find a suitable value, the rated current of the protected object is chosen. In line applications the primary rated current of the current transformer is recommended.

PU_37: Level of low phase current detection given in % of *IBase*. This setting is highly depending on the application and therefore can no general rules be given.

tUC: Time delay for trip in case of low phase current detection. The trip function can be used as stand alone short circuit protection with a long time delay. The choice of time delay is depending on the application of the protection as well as network topology.

Setting parameters

Table 207: LCP3PTUC (37) Group settings (basic)

Name	Values (Range)	Unit	Step	Default	Description
Operation	Disabled Enabled	-	-	Disabled	Operation Enable / Disable
IBase	0 - 99999	A	1	3000	Current Base
PU_37	1.00 - 100.00	%IB	0.01	50.00	Start value for 3 phase under current in % IBase
tUC	0.000 - 60.000	s	0.001	0.000	Time delay to operate

3.14 Logic

3.14.1 Tripping logic SMPPTRC (94)

Function description	IEC 61850 identification	IEC 60617 identification	ANSI/IEEE C37.2 device number
Tripping logic	SMPPTRC	*I->O*	94

3.14.1.1 Application

All trip signals from the different protection functions shall be routed through the trip logic. In its simplest alternative the logic will only link the TRIP signal and make sure that it is long enough.

Tripping logic SMPPTRC (94) offers three different operating modes:

- Three-pole tripping for all fault types (3ph operating mode)
- Single-pole tripping for single-phase faults and three-pole tripping for multi-phase and evolving faults (1ph/3ph operating mode). The logic also issues a three-pole tripping command when phase selection within the operating protection functions is not possible, or when external conditions request three-pole tripping.
- Two-pole tripping for two-phase faults.

The three-pole trip for all faults offers a simple solution and is often sufficient in well meshed transmission systems and in sub-transmission systems. Since most faults, especially at the highest voltage levels, are single phase-to-ground faults, single-pole tripping can be of great value. If only the faulty phase is tripped, power can still be transferred on the line during the dead time that arises before reclosing. Single-pole tripping during single-phase faults must be combined with single pole reclosing.

To meet the different double, breaker-and-a-half and other multiple circuit breaker arrangements, two identical SMPPTRC (94) function blocks may be provided within the IED.

One SMPPTRC (94) function block should be used for each breaker, if the line is connected to the substation via more than one breaker. Assume that single-pole tripping and autoreclosing is used on the line. Both breakers are then normally set up for 1/3-pole tripping and 1/3-phase autoreclosing. As an alternative, the breaker chosen as master can have single-pole tripping, while the slave breaker could have three-pole tripping and autoreclosing. In the case of a permanent fault, only one of the breakers has to be operated when the fault is energized a second time. In the event of a transient fault the slave breaker performs a three-pole reclosing onto the non-faulted line.

The same philosophy can be used for two-pole tripping and autoreclosing.

To prevent closing of a circuit breaker after a trip the function can block the closing.

The two instances of the SMPPTRC (94) function are identical except, for the name of the function block (SMPPTRC1 and SMPPTRC2). References will therefore only be made to SMPPTRC1 in the following description, but they also apply to SMPPTRC2.

Three-pole tripping

A simple application with three-pole tripping from the logic block utilizes part of the function block. Connect the inputs from the protection function blocks to the input TRINP_3P. If necessary (normally the case) use a logic OR block to combine the different function outputs to this input. Connect the output TRIP to the digital Output/s on the IO board.

This signal can also be used for other purposes internally in the IED. An example could be the starting of Breaker failure protection. The three outputs TR_A, TR_B, TR_C will always be activated at every trip and can be utilized on individual trip outputs if single-pole operating devices are available on the circuit breaker even when a three-pole tripping scheme is selected.

Set the function block to *Program = 3Ph* and set the required length of the trip pulse to for example, *tTripMin = 150ms*.

For special applications such as Lock-out refer to the separate section below. The typical connection is shown below in figure 310. Signals that are not used are dimmed.

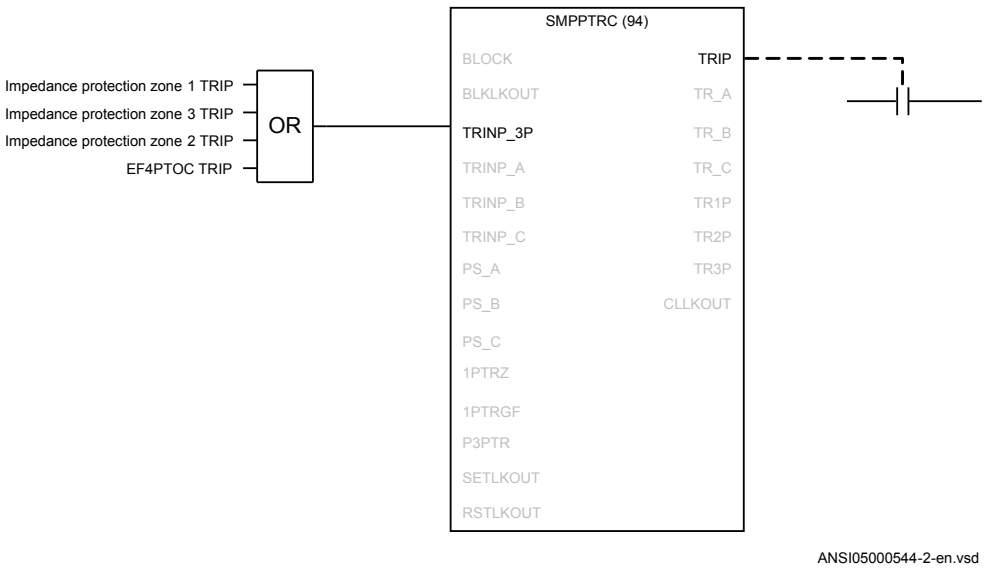

Figure 310: Tripping logic SMPPTRC (94) is used for a simple three-pole tripping application

Single- and/or three-pole tripping

The single-/three-pole tripping will give single-pole tripping for single-phase faults and three-pole tripping for multi-phase fault. The operating mode is always used together with a single-phase autoreclosing scheme.

The single-pole tripping can include different options and the use of the different inputs in the function block.

The inputs 1PTRZ and 1PTREF are used for single-pole tripping for distance protection and directional ground fault protection as required.

The inputs are combined with the phase selection logic and the pickup signals from the phase selector must be connected to the inputs PS_A, PS_B and PS_C to achieve the tripping on the respective single-pole trip outputs TR_A, TR_B and TR_C. The Output TRIP is a general trip and activated independent of which phase is involved. Depending on which phases are involved the outputs TR1P, TR2P and TR3P will be activated as well.

When single-pole tripping schemes are used a single-phase autoreclosing attempt is expected to follow. For cases where the autoreclosing is not in service or will not follow for some reason, the input Prepare Three-pole Trip P3PTR must be activated. This is normally connected to the respective output on the Synchronism check, energizing check, and synchronizing function SESRSYN (25) but can also be connected to other signals, for example an external logic signal. If two breakers are involved, one TR block instance and one SESRSYN (25) instance is used for each breaker. This will ensure correct operation and behavior of each breaker.

The output Trip 3 Phase TR3P must be connected to the respective input in SESRSYN (25) to switch SESRSYN (25) to three-phase reclosing. If this signal is not activated SESRSYN (25) will use single-phase reclosing dead time.

Note also that if a second line protection is utilizing the same SESRSYN (25) the three-pole trip signal must be generated, for example by using the three-trip relays contacts in series and connecting them in parallel to the TR3P output from the trip block.

The trip logic also has inputs TRIN_A, TRIN_B and TRIN_C where phase-selected trip signals can be connected. Examples can be individual phase inter-trips from remote end or internal/external phase selected trip signals, which are routed through the IED to achieve, for example SESRSYN (25), Breaker failure, and so on. Other back-up functions are connected to the input TRIN as described above. A typical connection for a single-pole tripping scheme is shown in figure 311.

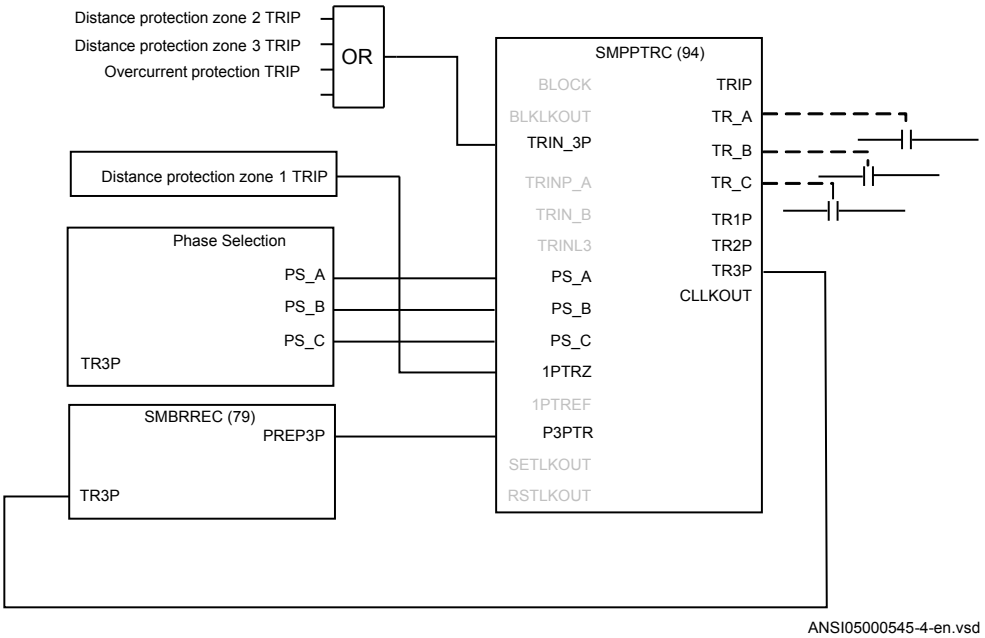

Figure 311: The trip logic function SMPPTRC (94) used for single-pole tripping application

Single-, two- or three-pole tripping

The single-/two-/three-pole tripping mode provides single-pole tripping for single-phase faults, two-pole tripping for two-phase faults and three-pole tripping for multi-phase faults. The operating mode is always used together with an autoreclosing scheme with setting *Program = 1/2/3Ph* or *Program = 1/3Ph* attempt.

The functionality is very similar to the single-phase scheme described above. However SESRSYN (25) must in addition to the connections for single phase above be informed that the trip is two phase by connecting the trip logic output TR2P to the respective input in SESRSYN (25).

Lock-out

This function block is provided with possibilities to initiate lock-out. The lock-out can be set to only activate the block closing output CLLKOUT or initiate the block closing output and also maintain the trip signal (latched trip).

The lock-out can then be manually reset after checking the primary fault by activating the input reset Lock-Out RSTLKOUT.

If external conditions are required to initiate Lock-out but not initiate trip this can be achieved by activating input SETLKOUT. The setting *AutoLock = Disabled* means that the internal trip will not activate lock-out so only initiation of the input SETLKOUT

will result in lock-out. This is normally the case for overhead line protection where most faults are transient. Unsuccessful autoreclose and back-up zone tripping can in such cases be connected to initiate Lock-out by activating the input SETLKOUT.

Blocking of the function block

The function block can be blocked in two different ways. Its use is dependent on the application. Blocking can be initiated internally by logic, or by the operator using a communication channel. Total blockage of the trip function is done by activating the input BLOCK and can be used to block the output of the trip logic in the event of internal failures. Blockage of lock-out output by activating input BLKLKOUT is used for operator control of the lock-out function.

3.14.1.2 Setting guidelines

The parameters for Tripping logic SMPPTRC (94) are set via the local HMI or PCM600.

The following trip parameters can be set to regulate tripping.

Operation: Sets the mode of operation. *Disabled* switches the tripping off. The normal selection is *Enabled*.

Program: Sets the required tripping scheme. Normally *3Ph* or *1/2Ph* are used.

TripLockout: Sets the scheme for lock-out. *Disabled* only activates the lock-out output. *Enabled* activates the lock-out output and latches the output `TRIP`. The normal selection is *Disabled*.

AutoLock: Sets the scheme for lock-out. *Disabled* only activates lock-out through the input SETLKOUT. *Enabled* additonally allows activation through the trip function itself. The normal selection is *Disabled*.

tTripMin: Sets the required minimum duration of the trip pulse. It should be set to ensure that the breaker is tripped correctly. Normal setting is *0.150s*.

tWaitForPHS: Sets a duration after any of the inputs 1PTRZ or 1PTREF has been activated during which a phase selection must occur to get a single phase trip. If no phase selection has been achieved a three-phase trip will be issued after the time has elapsed.

3.14.1.3 Setting parameters

Table 208: SMPPTRC (94) Group settings (basic)

Name	Values (Range)	Unit	Step	Default	Description
Operation	Disabled Enabled	-	-	Enabled	Disable/Enable Operation
Program	3 phase 1p/3p 1p/2p/3p	-	-	1p/3p	Three pole; single or three pole; single, two or three pole trip
tTripMin	0.000 - 60.000	s	0.001	0.150	Minimum duration of trip output signal
tWaitForPHS	0.020 - 0.500	s	0.001	0.050	Secures 3-pole trip when phase selection failed

Table 209: SMPPTRC (94) Group settings (advanced)

Name	Values (Range)	Unit	Step	Default	Description
TripLockout	Disabled Enabled	-	-	Disabled	If TripLockout is set to On, it will activate output (CLLKOUT) and trip latch. If set to Off it will activate only CLLKOUT
AutoLock	Disabled Enabled	-	-	Disabled	If AutoLock is set to On i will activate lockout from input (SETLKOUT) and trip, If set to Off it will activate only from SETLKOUT

3.14.2 Trip matrix logic TMAGGIO

Function description	IEC 61850 identification	IEC 60617 identification	ANSI/IEEE C37.2 device number
Trip matrix logic	TMAGGIO	-	-

3.14.2.1 Application

Trip matrix logic TMAGGIO function is used to route trip signals and other logical output signals to different output contacts on the IED.

TMAGGIO output signals and the physical outputs allows the user to adapt the signals to the physical tripping outputs according to the specific application needs.

3.14.2.2 Setting guidelines

Operation: Operation of function *Enabled*/*Disabled*.

PulseTime: Defines the pulse time delay. When used for direct tripping of circuit breaker(s) the pulse time delay shall be set to approximately 0.150 seconds in order to obtain satisfactory minimum duration of the trip pulse to the circuit breaker trip coils.

OnDelay: Used to prevent output signals to be given for spurious inputs. Normally set to 0 or a low value.

OffDelay: Defines a minimum on time for the outputs. When used for direct tripping of circuit breaker(s) the off delay time shall be set to approximately 0.150 seconds in order to obtain a satisfactory minimum duration of the trip pulse to the circuit breaker trip coils.

ModeOutputx: Defines if output signal `OUTPUTx` (where x=1-3) is *Steady* or *Pulsed*.

3.14.2.3 Setting parameters

Table 210: TMAGGIO Group settings (basic)

Name	Values (Range)	Unit	Step	Default	Description
Operation	Disabled Enabled	-	-	Enabled	Operation Disable / Enable
PulseTime	0.050 - 60.000	s	0.001	0.150	Output pulse time
OnDelay	0.000 - 60.000	s	0.001	0.000	Output on delay time
OffDelay	0.000 - 60.000	s	0.001	0.000	Output off delay time
ModeOutput1	Steady Pulsed	-	-	Steady	Mode for output ,1 steady or pulsed
ModeOutput2	Steady Pulsed	-	-	Steady	Mode for output 2, steady or pulsed
ModeOutput3	Steady Pulsed	-	-	Steady	Mode for output 3, steady or pulsed

3.14.3 Configurable logic blocks

3.14.3.1 Application

A set of standard logic blocks, like AND, OR etc, and timers are available for adapting the IED configuration to the specific application needs.

There are no settings for AND gates, OR gates, inverters or XOR gates.

For normal On/Off delay and pulse timers the time delays and pulse lengths are set from the local HMI or via the PST tool.

Both timers in the same logic block (the one delayed on pick-up and the one delayed on drop-out) always have a common setting value.

For controllable gates, settable timers and SR flip-flops with memory, the setting parameters are accessible via the local HMI or via the PST tool.

Configuration

Logic is configured using the ACT configuration tool in PCM600.

Execution of functions as defined by the configurable logic blocks runs according to a fixed sequence with different cycle times.

For each cycle time, the function block is given an serial execution number. This is shown when using the ACT configuration tool with the designation of the function block and the cycle time, see example below.

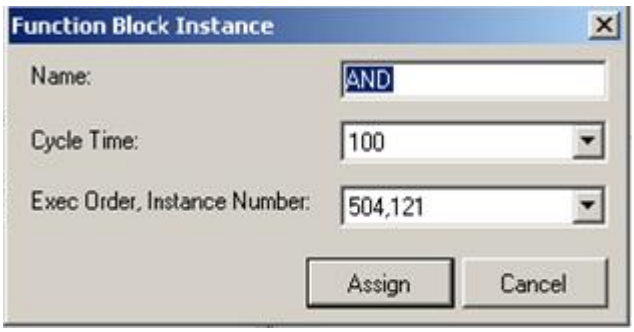

IEC09000695_2_en.vsd

Figure 312: Example designation, serial execution number and cycle time for logic function

The execution of different function blocks within the same cycle is determined by the order of their serial execution numbers. Always remember this when connecting two or more logical function blocks in series.

Always be careful when connecting function blocks with a fast cycle time to function blocks with a slow cycle time.
Remember to design the logic circuits carefully and always check the execution sequence for different functions. In other cases, additional time delays must be introduced into the logic schemes to prevent errors, for example, race between functions.

3.14.3.2 Setting parameters

Table 211: TIMER Non group settings (basic)

Name	Values (Range)	Unit	Step	Default	Description
T	0.000 - 90000.000	s	0.001	0.000	Time delay of function

Table 212: PULSETIMER Non group settings (basic)

Name	Values (Range)	Unit	Step	Default	Description
T	0.000 - 90000.000	s	0.001	0.010	Time delay of function

Table 213: SRMEMORY Group settings (basic)

Name	Values (Range)	Unit	Step	Default	Description
Memory	Disabled Enabled	-	-	Enabled	Operating mode of the memory function

Table 214: RSMEMORY Group settings (basic)

Name	Values (Range)	Unit	Step	Default	Description
Memory	Disabled Enabled	-	-	Enabled	Operating mode of the memory function

Table 215: GATE Group settings (basic)

Name	Values (Range)	Unit	Step	Default	Description
Operation	Disabled Enabled	-	-	Disabled	Operation Disabled/Enabled

Table 216: TIMERSET Group settings (basic)

Name	Values (Range)	Unit	Step	Default	Description
Operation	Disabled Enabled	-	-	Disabled	Operation Disabled/Enabled
t	0.000 - 90000.000	s	0.001	0.000	Delay for settable timer n

3.14.4 Fixed signal function block FXDSIGN

Function description	IEC 61850 identification	IEC 60617 identification	ANSI/IEEE C37.2 device number
Fixed signals	FXDSIGN	-	-

3.14.4.1 Application

The Fixed signals function (FXDSIGN) generates a number of pre-set (fixed) signals that can be used in the configuration of an IED, either for forcing the unused inputs in other function blocks to a certain level/value, or for creating certain logic.

Example for use of GRP_OFF signal in FXDSIGN

The Restricted earth fault function REFPDIF (87N) can be used both for auto-transformers and normal transformers.

When used for auto-transformers, information from both windings parts, together with the neutral point current, needs to be available to the function. This means that three inputs are needed.

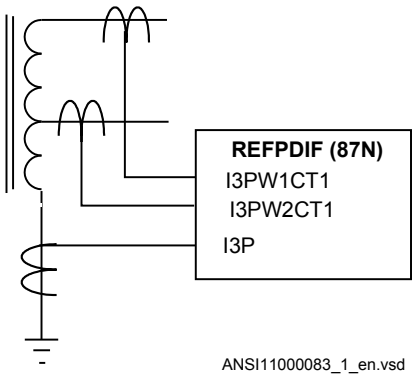

Figure 313: REFPDIF (87N) function inputs for autotransformer application

For normal transformers only one winding and the neutral point is available. This means that only two inputs are used. Since all group connections are mandatory to be connected, the third input needs to be connected to something, which is the GRP_OFF signal in FXDSIGN function block.

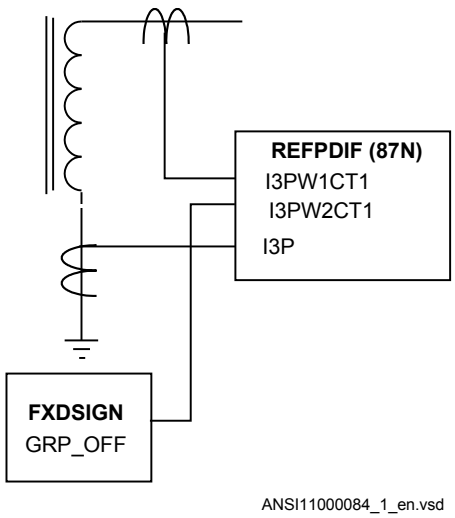

Figure 314: REFPDIF (87N) function inputs for normal transformer application

3.14.4.2 Setting parameters

The function does not have any parameters available in Local HMI or Protection and Control IED Manager (PCM 600)

3.14.5 Boolean 16 to Integer conversion B16I

Function description	IEC 61850 identification	IEC 60617 identification	ANSI/IEEE C37.2 device number
Boolean 16 to integer conversion	B16I	-	-

3.14.5.1 Application

Boolean 16 to integer conversion function B16I is used to transform a set of 16 binary (logical) signals into an integer. It can be used – for example, to connect logical output signals from a function (like distance protection) to integer inputs from another function (like line differential protection). B16I does not have a logical node mapping.

3.14.5.2 Setting guidelines

The function does not have any parameters available in Local HMI or Protection and Control IED Manager (PCM600).

3.14.6 Boolean 16 to Integer conversion with logic node representation B16IFCVI

Function description	IEC 61850 identification	IEC 60617 identification	ANSI/IEEE C37.2 device number
Boolean 16 to integer conversion with logic node representation	B16IFCVI	-	-

3.14.6.1 Application

Boolean 16 to integer conversion with logic node representation function B16IFCVI is used to transform a set of 16 binary (logical) signals into an integer. B16IFCVI can receive an integer from a station computer – for example, over IEC 61850–8–1. These functions are very useful when you want to generate logical commands (for selector switches or voltage controllers) by inputting an integer number. B16IFCVI has a logical node mapping in IEC 61850.

3.14.6.2 Setting guidelines

The function does not have any parameters available in the local HMI or Protection and Control IED Manager (PCM600).

3.14.7 Integer to Boolean 16 conversion IB16

Function description	IEC 61850 identification	IEC 60617 identification	ANSI/IEEE C37.2 device number
Integer to boolean 16 conversion	IB16	-	-

3.14.7.1 Application

Integer to boolean 16 conversion function (IB16) is used to transform an integer into a set of 16 binary (logical) signals. It can be used – for example, to connect integer output signals from one function to binary (logical) inputs to another function. IB16 function does not have a logical node mapping.

3.14.7.2 Setting parameters

The function does not have any parameters available in the local HMI or Protection and Control IED Manager (PCM600).

3.14.8 Integer to Boolean 16 conversion with logic node representation IB16FCVB

Function description	IEC 61850 identification	IEC 60617 identification	ANSI/IEEE C37.2 device number
Integer to boolean 16 conversion with logic node representation	IB16FCVB	-	-

3.14.8.1 Application

Integer to boolean 16 conversion with logic node representation function (IB16FCVB) is used to transform an integer into a set of 16 binary (logical) signals. IB16FCVB function can receive an integer from a station computer – for example, over IEC 61850–8–1. These functions are very useful when the user wants to generate logical commands (for selector switches or voltage controllers) by inputting an integer number. IB16FCVB function has a logical node mapping in IEC 61850.

3.14.8.2 Setting parameters

The function does not have any parameters available in the local HMI or Protection and Control IED Manager (PCM600)

3.15 Monitoring

3.15.1 Measurement

Function description	IEC 61850 identification	IEC 60617 identification	ANSI/IEEE C37.2 device number
Measurements	CVMMXN	*P, Q, S, I, U, f*	-
Phase current measurement	CMMXU	*I*	-
Phase-phase voltage measurement	VMMXU	*U*	-
Current sequence component measurement	CMSQI	*I1, I2, I0*	-
Voltage sequence measurement	VMSQI	*U1, U2, U0*	-
Phase-neutral voltage measurement	VNMMXU	*U*	-

3.15.1.1 Application

Measurement functions is used for power system measurement, supervision and reporting to the local HMI, monitoring tool within PCM600 or to station level for

example, via IEC 61850. The possibility to continuously monitor measured values of active power, reactive power, currents, voltages, frequency, power factor etc. is vital for efficient production, transmission and distribution of electrical energy. It provides to the system operator fast and easy overview of the present status of the power system. Additionally, it can be used during testing and commissioning of protection and control IEDs in order to verify proper operation and connection of instrument transformers (CTs and VTs). During normal service by periodic comparison of the measured value from the IED with other independent meters the proper operation of the IED analog measurement chain can be verified. Finally, it can be used to verify proper direction orientation for distance or directional overcurrent protection function.

The available measured values of an IED are depending on the actual hardware (TRM) and the logic configuration made in PCM600.

All measured values can be supervised with four settable limits that is, low-low limit, low limit, high limit and high-high limit. A zero clamping reduction is also supported, that is, the measured value below a settable limit is forced to zero which reduces the impact of noise in the inputs.

Dead-band supervision can be used to report measured signal value to station level when change in measured value is above set threshold limit or time integral of all changes since the last time value updating exceeds the threshold limit. Measure value can also be based on periodic reporting.

The measurement function, CVMMXN, provides the following power system quantities:

- P, Q and S: three phase active, reactive and apparent power
- PF: power factor
- V: phase-to-phase voltage magnitude
- I: phase current magnitude
- F: power system frequency

Main menu/Measurement/Monitoring/Service values/CVMMXN

The measuring functions CMMXU, VNMMXU and VMMXU provide physical quantities:

- I: phase currents (magnitude and angle) (CMMXU)
- V: voltages (phase-to-ground and phase-to-phase voltage, magnitude and angle) (VMMXU, VNMMXU)

It is possible to calibrate the measuring function above to get better then class 0.5 presentation. This is accomplished by angle and magnitude compensation at 5, 30 and 100% of rated current and at 100% of rated voltage.

The power system quantities provided, depends on the actual hardware, (TRM) and the logic configuration made in PCM600.

The measuring functions CMSQI and VMSQI provide sequence component quantities:

- I: sequence currents (positive, zero, negative sequence, magnitude and angle)
- V: sequence voltages (positive, zero and negative sequence, magnitude and angle).

The CVMMXN function calculates three-phase power quantities by using fundamental frequency phasors (DFT values) of the measured current respectively voltage signals. The measured power quantities are available either, as instantaneously calculated quantities or, averaged values over a period of time (low pass filtered) depending on the selected settings.

3.15.1.2 Zero clamping

The measuring functions, CMMXU, VMMXU, VNMMXU and CVMMXN have no interconnections regarding any setting or parameter.

Zero clampings are also entirely handled by the *ZeroDb* for each and every signal separately for each of the functions. For example, the zero clamping of *U12* is handled by *UL12ZeroDb* in VMMXU, zero clamping of I1 is handled by *IL1ZeroDb* in CMMXU ETC.

Example how CVMMXN is operating:

The following outputs can be observed on the local HMI under **Monitoring/ Servicevalues/SRV1**

S	Apparent three-phase power
P	Active three-phase power
Q	Reactive three-phase power
PF	Power factor
ILAG	I lagging U
ILEAD	I leading U
U	System mean voltage, calculated according to selected mode
I	System mean current, calculated according to selected mode
F	Frequency

The settings for this function is found under **Setting/General setting/Monitoring/ Service values/SRV1**

It can be seen that:

- When system voltage falls below *UGenZeroDB*, the shown value for S, P, Q, PF, ILAG, ILEAD, U and F on the local HMI is forced to zero
- When system current falls below *IGenZeroDB*, the shown value for S, P, Q, PF, ILAG, ILEAD, U and F on the local HMI is forced to zero
- When the value of a single signal falls below the set dead band for that specific signal, the value shown on the local HMI is forced to zero. For example, if apparent three-phase power falls below *SZeroDb* the value for S on the local HMI is forced to zero.

3.15.1.3 Setting guidelines

The available setting parameters of the measurement function CVMMXN, CMMXU, VMMXU, CMSQI, VMSQI, VNMMXU are depending on the actual hardware (TRM) and the logic configuration made in PCM600.

The parameters for the Measurement functions CVMMXN, CMMXU, VMMXU, CMSQI, VMSQI, VNMMXU are set via the local HMI or PCM600.

Operation: *Disabled*/*Enabled*. Every function instance (CVMMXN, CMMXU, VMMXU, CMSQI, VMSQI, VNMMXU) can be taken in operation (*Enabled*) or out of operation (*Disabled*).

The following general settings can be set for the **Measurement function** (CVMMXN).

PowMagFact: Magnitude factor to scale power calculations.

PowAngComp: Angle compensation for phase shift between measured I & V.

Mode: Selection of measured current and voltage. There are 9 different ways of calculating monitored three-phase values depending on the available VT inputs connected to the IED. See parameter group setting table.

k: Low pass filter coefficient for power measurement, V and I.

VGenZeroDb: Minimum level of voltage in % of VBase used as indication of zero voltage (zero point clamping). If measured value is below *VGenZeroDb* calculated S, P, Q and PF will be zero.

IGenZeroDb: Minimum level of current in % of *IBase* used as indication of zero current (zero point clamping). If measured value is below *IGenZeroDb* calculated S, P, Q and PF will be zero.

VBase: Base voltage in primary kV. This voltage is used as reference for voltage setting. It can be suitable to set this parameter to the rated primary voltage supervised object.

IBase: Base current in primary A. This current is used as reference for current setting. It can be suitable to set this parameter to the rated primary current of the supervised object.

SBase: Base setting for power values in MVA.

VMagCompY: Magnitude compensation to calibrate voltage measurements at Y% of Vn, where Y is equal to 5, 30 or 100.

IMagCompY: Magnitude compensation to calibrate current measurements at Y% of In, where Y is equal to 5, 30 or 100.

IAngCompY: Angle compensation to calibrate angle measurements at Y% of In, where Y is equal to 5, 30 or 100.

Parameters *IBase*, *Ubase* and *SBase* have been implemented as a settings instead of a parameters, which means that if the values of the parameters are changed there will be no restart of the application. As restart is required to activate new parameters values, the IED must be restarted in some way. Either manually or by changing some other parameter at the same time.

The following general settings can be set for the **Phase-phase current measurement** (CMMXU).

IMagCompY: Magnitude compensation to calibrate current measurements at Y% of In, where Y is equal to 5, 30 or 100.

IAngCompY: Angle compensation to calibrate angle measurements at Y% of In, where Y is equal to 5, 30 or 100.

The following general settings can be set for the **Phase-phase voltage measurement** (VMMXU).

VMagCompY: Amplitude compensation to calibrate voltage measurements at Y% of Vn, where Y is equal to 5, 30 or 100.

VAngCompY: Angle compensation to calibrate angle measurements at Y% of Vn, where Y is equal to 5, 30 or 100.

The following general settings can be set for **all monitored quantities** included in the functions (CVMMXN, CMMXU, VMMXU, CMSQI, VMSQI, VNMMXU) X in setting names below equals S, P, Q, PF, V, I, F, IA,IB,IC, VA, VB, VCVAB, VBC, VCA, I1, I2, 3I0, V1, V2 or 3V0.

Xmin: Minimum value for analog signal X set directly in applicable measuring unit.

Xmax: Maximum value for analog signal X.

XZeroDb: Zero point clamping. A signal value less than *XZeroDb* is forced to zero.

Observe the related zero point clamping settings in Setting group N for CVMMXN (*VGenZeroDb* and *IGenZeroDb*). If measured value is below *VGenZeroDb* and/or *IGenZeroDb* calculated S, P, Q and PF will be zero and these settings will override *XZeroDb*.

XRepTyp: Reporting type. Cyclic (*Cyclic*), magnitude deadband (*Dead band*) or integral deadband (*Int deadband*). The reporting interval is controlled by the parameter *XDbRepInt*.

XDbRepInt: Reporting deadband setting. Cyclic reporting is the setting value and is reporting interval in seconds. Magnitude deadband is the setting value in % of measuring range. Integral deadband setting is the integral area, that is, measured value in % of measuring range multiplied by the time between two measured values.

XHiHiLim: High-high limit. Set in applicable measuring unit.

XHiLim: High limit.

XLowLim: Low limit.

XLowLowLim: Low-low limit.

XLimHyst: Hysteresis value in % of range and is common for all limits.

All phase angles are presented in relation to defined reference channel. The parameter *PhaseAngleRef* defines the reference, see section "Analog inputs".

Calibration curves

It is possible to calibrate the functions (CVMMXN, CMMXU, VNMMXU and VMMXU) to get class 0.5 presentations of currents, voltages and powers. This is accomplished by magnitude and angle compensation at 5, 30 and 100% of rated current and voltage. The compensation curve will have the characteristic for magnitude and angle compensation of currents as shown in figure 315 (example). The first phase will be used as reference channel and compared with the curve for calculation of factors. The factors will then be used for all related channels.

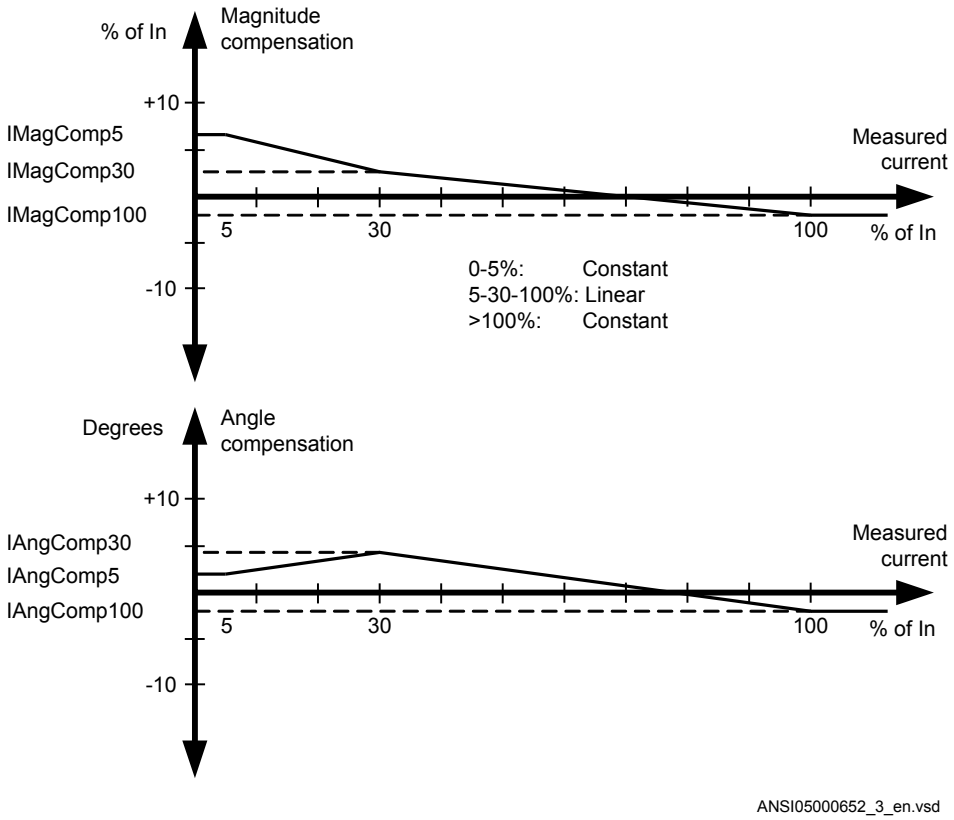

Figure 315: Calibration curves

Setting examples

Three setting examples, in connection to Measurement function (CVMMXN), are provided:

- Measurement function (CVMMXN) application for a 400 kV OHL
- Measurement function (CVMMXN) application on the secondary side of a transformer
- Measurement function (CVMMXN) application for a generator

For each of them detail explanation and final list of selected setting parameters values will be provided.

The available measured values of an IED are depending on the actual hardware (TRM) and the logic configuration made in PCM600.

Measurement function application for a 380 kV OHL

Single line diagram for this application is given in figure 316:

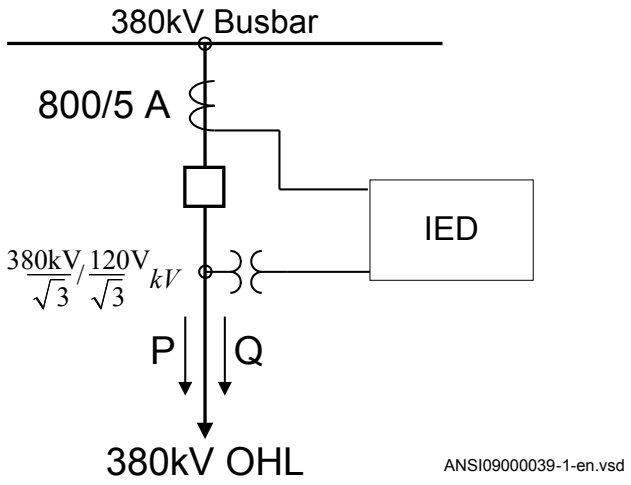

Figure 316: Single line diagram for 380 kV OHL application

In order to monitor, supervise and calibrate the active and reactive power as indicated in figure 316 it is necessary to do the following:

1. Set correctly CT and VT data and phase angle reference channel *PhaseAngleRef* (see section "Analog inputs") using PCM600 for analog input channels
2. Connect, in PCM600, measurement function to three-phase CT and VT inputs
3. Set under General settings parameters for the Measurement function:
   - general settings as shown in table 217.
   - level supervision of active power as shown in table 218.
   - calibration parameters as shown in table 219.

Table 217: General settings parameters for the Measurement function

Setting	Short Description	Selected value	Comments
Operation	Operation Off/On	On	Function must be *On*
PowAmpFact	Amplitude factor to scale power calculations	1.000	It can be used during commissioning to achieve higher measurement accuracy. Typically no scaling is required
PowAngComp	Angle compensation for phase shift between measured I & U	0.0	It can be used during commissioning to achieve higher measurement accuracy. Typically no angle compensation is required. As well here required direction of P & Q measurement is towards protected object (as per IED internal default direction)
Mode	Selection of measured current and voltage	L1, L2, L3	All three phase-to-ground VT inputs are available
k	Low pass filter coefficient for power measurement, V and I	0.00	Typically no additional filtering is required
VGenZeroDb	Zero point clamping in % of Ubase	25	Set minimum voltage level to 25%. Voltage below 25% will force S, P and Q to zero.
IGenZeroDb	Zero point clamping in % of Ibase	3	Set minimum current level to 3%. Current below 3% will force S, P and Q to zero.
VBase	Base setting for voltage level in kV	400.00	Set rated OHL phase-to-phase voltage
IBase	Base setting for current level in A	800	Set rated primary CT current used for OHL

Table 218: Settings parameters for level supervision

Setting	Short Description	Selected value	Comments
PMin	Minimum value	-750	Minimum expected load
PMax	Minimum value	750	Maximum expected load
PZeroDb	Zero point clamping in 0.001% of range	3000	Set zero point clamping to 45 MW that is, 3% of 1500 MW
PRepTyp	Reporting type	db	Select magnitude deadband supervision
PDbRepInt	Cycl: Report interval (s), Db: In % of range, Int Db: In %s	2	Set ±Δdb=30 MW that is, 2% (larger changes than 30 MW will be reported)
PHiHiLim	High High limit (physical value)	600	High alarm limit that is, extreme overload alarm
PHiLim	High limit (physical value)	500	High warning limit that is, overload warning

Table continues on next page

Setting	Short Description	Selected value	Comments
PLowLim	Low limit (physical value)	-800	Low warning limit. Not active
PLowLowLim	Low Low limit (physical value)	-800	Low alarm limit. Not active
PLimHyst	Hysteresis value in % of range (common for all limits)	2	Set ±Δ Hysteresis MW that is, 2%

Table 219: Settings for calibration parameters

Setting	Short Description	Selected value	Comments
IMagComp5	Magnitude factor to calibrate current at 5% of In	0.00	
IMagComp30	Magnitude factor to calibrate current at 30% of In	0.00	
IMagComp100	Magnitude factor to calibrate current at 100% of In	0.00	
VAmpComp5	Magnitude factor to calibrate voltage at 5% of Vn	0.00	
VMagComp30	Magnitude factor to calibrate voltage at 30% of Vn	0.00	
VMagComp100	Magnitude factor to calibrate voltage at 100% of Vn	0.00	
IAngComp5	Angle calibration for current at 5% of In	0.00	
IAngComp30	Angle pre-calibration for current at 30% of In	0.00	
IAngComp100	Angle pre-calibration for current at 100% of In	0.00	

Measurement function application for a power transformer

Single line diagram for this application is given in figure 317.

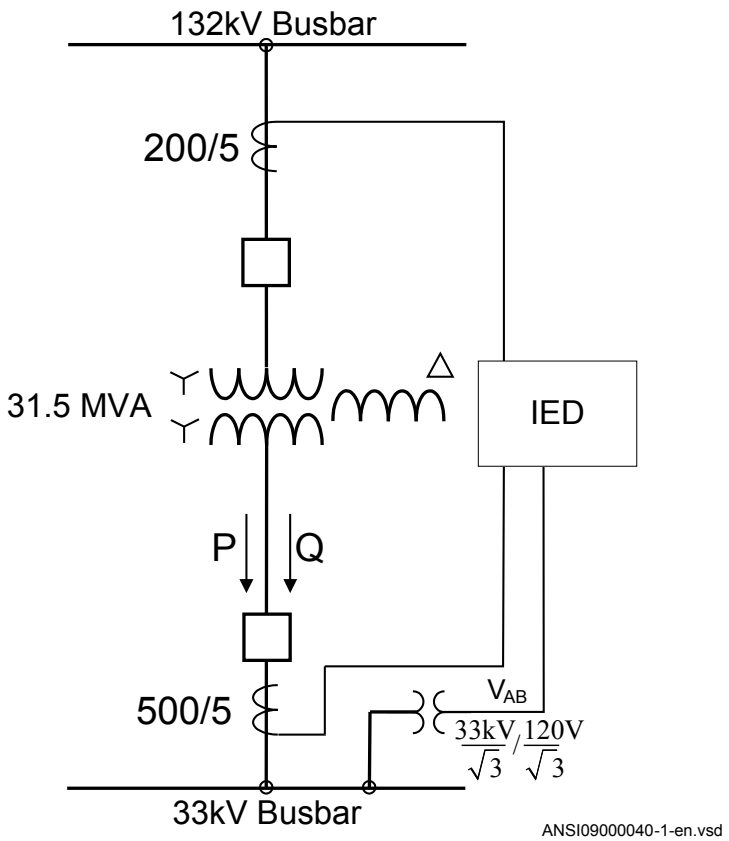

Figure 317: Single line diagram for transformer application

In order to measure the active and reactive power as indicated in figure 317, it is necessary to do the following:

1. Set correctly all CT and VT and phase angle reference channel *PhaseAngleRef* (see section "Analog inputs") data using PCM600 for analog input channels
2. Connect, in PCM600, measurement function to LV side CT & VT inputs
3. Set the setting parameters for relevant Measurement function as shown in the following table 220:

Table 220: General settings parameters for the Measurement function

Setting	Short description	Selected value	Comment
Operation	Operation *Disabled*/*Enabled*	*Enabled*	Function must be *Enabled*
PowAmpFact	Magnitude factor to scale power calculations	1.000	Typically no scaling is required
PowAngComp	Angle compensation for phase shift between measured I & V	180.0	Typically no angle compensation is required. However here the required direction of P & Q measurement is towards busbar (Not per IED internal default direction). Therefore angle compensation have to be used in order to get measurements in aliment with the required direction.
Mode	Selection of measured current and voltage	L1L2	Only UL1L2 phase-to-phase voltage is available
k	Low pass filter coefficient for power measurement, V and I	0.00	Typically no additional filtering is required
VGenZeroDb	Zero point clamping in % of Vbase	25	Set minimum voltage level to 25%
IGenZeroDb	Zero point clamping in % of Ibase	3	Set minimum current level to 3%
VBase	Base setting for voltage level in kV	35.00	Set LV side rated phase-to-phase voltage
IBase	Base setting for current level in A	495	Set transformer LV winding rated current

Measurement function application for a generator

Single line diagram for this application is given in figure 318.

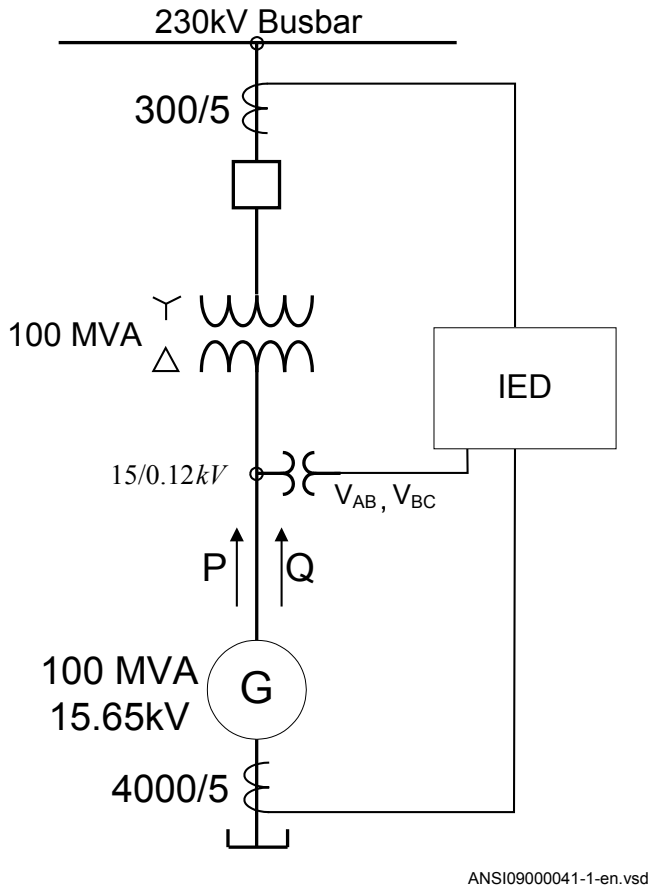

Figure 318: Single line diagram for generator application

In order to measure the active and reactive power as indicated in figure 318, it is necessary to do the following:

1. Set correctly all CT and VT data and phase angle reference channel *PhaseAngleRef*(see section "Analog inputs") using PCM600 for analog input channels
2. Connect, in PCM600, measurement function to the generator CT & VT inputs
3. Set the setting parameters for relevant Measurement function as shown in the following table:

Table 221: General settings parameters for the Measurement function

Setting	Short description	Selected value	Comment
Operation	Operation Off/On	On	Function must be *On*
PowAmpFact	Amplitude factor to scale power calculations	1.000	Typically no scaling is required
PowAngComp	Angle compensation for phase shift between measured I & V	0.0	Typically no angle compensation is required. As well here required direction of P & Q measurement is towards protected object (as per IED internal default direction)
Mode	Selection of measured current and voltage	Arone	Generator VTs are connected between phases (V-connected)
k	Low pass filter coefficient for power measurement, V and I	0.00	Typically no additional filtering is required
VGenZeroDb	Zero point clamping in % of Vbase	25%	Set minimum voltage level to 25%
IGenZeroDb	Zero point clamping in % of Ibase	3	Set minimum current level to 3%
VBase	Base setting for voltage level in kV	15,65	Set generator rated phase-to-phase voltage
IBase	Base setting for current level in A	3690	Set generator rated current

3.15.1.4 Setting parameters

The available setting parameters of the measurement function (MMXU, MSQI) are depending on the actual hardware (TRM) and the logic configuration made in PCM600.

Table 222: CVMMXN Non group settings (basic)

Name	Values (Range)	Unit	Step	Default	Description
SLowLim	0.0 - 2000.0	%SB	0.1	80.0	Low limit in % of SBase
SLowLowLim	0.0 - 2000.0	%SB	0.1	60.0	Low Low limit in % of SBase
SMin	0.0 - 2000.0	%SB	0.1	50.0	Minimum value in % of SBase
SMax	0.0 - 2000.0	%SB	0.1	200.0	Maximum value in % of SBase
SRepTyp	Cyclic Dead band Int deadband	-	-	Cyclic	Reporting type
PMin	-2000.0 - 2000.0	%SB	0.1	-200.0	Minimum value in % of SBase
PMax	-2000.0 - 2000.0	%SB	0.1	200.0	Maximum value in % of SBase
PRepTyp	Cyclic Dead band Int deadband	-	-	Cyclic	Reporting type
QMin	-2000.0 - 2000.0	%SB	0.1	-200.0	Minimum value in % of SBase
QMax	-2000.0 - 2000.0	%SB	0.1	200.0	Maximum value in % of SBase

Table continues on next page

Name	Values (Range)	Unit	Step	Default	Description
QRepTyp	Cyclic Dead band Int deadband	-	-	Cyclic	Reporting type
PFMin	-1.000 - 1.000	-	0.001	-1.000	Minimum value
PFMax	-1.000 - 1.000	-	0.001	1.000	Maximum value
PFRepTyp	Cyclic Dead band Int deadband	-	-	Cyclic	Reporting type
VMin	0.0 - 200.0	%VB	0.1	50.0	Minimum value in % of UBase
VMax	0.0 - 200.0	%VB	0.1	200.0	Maximum value in % of UBase
VRepTyp	Cyclic Dead band Int deadband	-	-	Cyclic	Reporting type
IMin	0.0 - 500.0	%IB	0.1	50.0	Minimum value in % of IBase
IMax	0.0 - 500.0	%IB	0.1	200.0	Maximum value in % of IBase
IRepTyp	Cyclic Dead band Int deadband	-	-	Cyclic	Reporting type
FrMin	0.000 - 100.000	Hz	0.001	0.000	Minimum value
FrMax	0.000 - 100.000	Hz	0.001	70.000	Maximum value
FrRepTyp	Cyclic Dead band Int deadband	-	-	Cyclic	Reporting type
Operation	Disabled Enabled	-	-	Disabled	Disable/Enable Operation
IBase	1 - 99999	A	1	3000	Base setting for current values in A
VBase	0.05 - 2000.00	kV	0.05	400.00	Base setting for voltage value in kV
SBase	0.05 - 200000.00	MVA	0.05	2080.00	Base setting for power values in MVA
Mode	A, B, C Arone Pos Seq AB BC CA A B C	-	-	A, B, C	Selection of measured current and voltage
PowMagFact	0.000 - 6.000	-	0.001	1.000	Magnitude factor to scale power calculations
PowAngComp	-180.0 - 180.0	Deg	0.1	0.0	Angle compensation for phase shift between measured I & V
k	0.000 - 1.000	-	0.001	0.000	Low pass filter coefficient for power measurement, V and I

Table 223: CVMMXN Non group settings (advanced)

Name	Values (Range)	Unit	Step	Default	Description
SDbRepInt	1 - 300	Type	1	10	Cycl: Report interval (s), Db: In % of range, Int Db: In %s
SZeroDb	0 - 100000	m%	1	500	Zero point clamping in 0.001% of range
SHiHiLim	0.0 - 2000.0	%SB	0.1	150.0	High High limit in % of SBase
SHiLim	0.0 - 2000.0	%SB	0.1	120.0	High limit in % of SBase
SLimHyst	0.000 - 100.000	%	0.001	5.000	Hysteresis value in % of range (common for all limits)
PDbRepInt	1 - 300	Type	1	10	Cycl: Report interval (s), Db: In % of range, Int Db: In %s
PZeroDb	0 - 100000	m%	1	500	Zero point clamping in 0.001% of range
PHiHiLim	-2000.0 - 2000.0	%SB	0.1	150.0	High High limit in % of SBase
PHiLim	-2000.0 - 2000.0	%SB	0.1	120.0	High limit in % of SBase
PLowLim	-2000.0 - 2000.0	%SB	0.1	-120.0	Low limit in % of SBase
PLowLowLim	-2000.0 - 2000.0	%SB	0.1	-150.0	Low Low limit in % of SBase
PLimHyst	0.000 - 100.000	%	0.001	5.000	Hysteresis value in % of range (common for all limits)
QDbRepInt	1 - 300	Type	1	10	Cycl: Report interval (s), Db: In % of range, Int Db: In %s
QZeroDb	0 - 100000	m%	1	500	Zero point clamping in 0.001% of range
QHiHiLim	-2000.0 - 2000.0	%SB	0.1	150.0	High High limit in % of SBase
QHiLim	-2000.0 - 2000.0	%SB	0.1	120.0	High limit in % of SBase
QLowLim	-2000.0 - 2000.0	%SB	0.1	-120.0	Low limit in % of SBase
QLowLowLim	-2000.0 - 2000.0	%SB	0.1	-150.0	Low Low limit in % of SBase
QLimHyst	0.000 - 100.000	%	0.001	5.000	Hysteresis value in % of range (common for all limits)
PFDbRepInt	1 - 300	Type	1	10	Cycl: Report interval (s), Db: In % of range, Int Db: In %s
PFZeroDb	0 - 100000	m%	1	500	Zero point clamping in 0.001% of range
PFHiHiLim	-1.000 - 1.000	-	0.001	1.000	High High limit (physical value)
PFHiLim	-1.000 - 1.000	-	0.001	0.800	High limit (physical value)
PFLowLim	-1.000 - 1.000	-	0.001	-0.800	Low limit (physical value)
PFLowLowLim	-1.000 - 1.000	-	0.001	-1.000	Low Low limit (physical value)
PFLimHyst	0.000 - 100.000	%	0.001	5.000	Hysteresis value in % of range (common for all limits)
VDbRepInt	1 - 300	Type	1	10	Cycl: Report interval (s), Db: In % of range, Int Db: In %s
VZeroDb	0 - 100000	m%	1	500	Zero point clamping in 0.001% of range
VHiHiLim	0.0 - 200.0	%VB	0.1	150.0	High High limit in % of UBase
VHiLim	0.0 - 200.0	%VB	0.1	120.0	High limit in % of UBase

Table continues on next page

Name	Values (Range)	Unit	Step	Default	Description
VLowLim	0.0 - 200.0	%VB	0.1	80.0	Low limit in % of UBase
VLowLowLim	0.0 - 200.0	%VB	0.1	60.0	Low Low limit in % of UBase
VLimHyst	0.000 - 100.000	%	0.001	5.000	Hysteresis value in % of range (common for all limits)
IDbRepInt	1 - 300	Type	1	10	Cycl: Report interval (s), Db: In % of range, Int Db: In %s
IZeroDb	0 - 100000	m%	1	500	Zero point clamping in 0.001% of range
IHiHiLim	0.0 - 500.0	%IB	0.1	150.0	High High limit in % of IBase
IHiLim	0.0 - 500.0	%IB	0.1	120.0	High limit in % of IBase
ILowLim	0.0 - 500.0	%IB	0.1	80.0	Low limit in % of IBase
ILowLowLim	0.0 - 500.0	%IB	0.1	60.0	Low Low limit in % of IBase
ILimHyst	0.000 - 100.000	%	0.001	5.000	Hysteresis value in % of range (common for all limits)
FrDbRepInt	1 - 300	Type	1	10	Cycl: Report interval (s), Db: In % of range, Int Db: In %s
FrZeroDb	0 - 100000	m%	1	500	Zero point clamping in 0.001% of range
FrHiHiLim	0.000 - 100.000	Hz	0.001	65.000	High High limit (physical value)
FrHiLim	0.000 - 100.000	Hz	0.001	63.000	High limit (physical value)
FrLowLim	0.000 - 100.000	Hz	0.001	47.000	Low limit (physical value)
FrLowLowLim	0.000 - 100.000	Hz	0.001	45.000	Low Low limit (physical value)
FrLimHyst	0.000 - 100.000	%	0.001	5.000	Hysteresis value in % of range (common for all limits)
VGenZeroDb	1 - 100	%VB	1	5	Zero point clamping in % of VBase
IGenZeroDb	1 - 100	%IB	1	5	Zero point clamping in % of IBase
VMagComp5	-10.000 - 10.000	%	0.001	0.000	Magnitude factor to calibrate voltage at 5% of Vn
VMagComp30	-10.000 - 10.000	%	0.001	0.000	Magnitude factor to calibrate voltage at 30% of Vn
VMagComp100	-10.000 - 10.000	%	0.001	0.000	Magnitude factor to calibrate voltage at 100% of Vn
IMagComp5	-10.000 - 10.000	%	0.001	0.000	Magnitude factor to calibrate current at 5% of In
IMagComp30	-10.000 - 10.000	%	0.001	0.000	Magnitude factor to calibrate current at 30% of In
IMagComp100	-10.000 - 10.000	%	0.001	0.000	Magnitude factor to calibrate current at 100% of In
IAngComp5	-10.000 - 10.000	Deg	0.001	0.000	Angle calibration for current at 5% of In
IAngComp30	-10.000 - 10.000	Deg	0.001	0.000	Angle calibration for current at 30% of In
IAngComp100	-10.000 - 10.000	Deg	0.001	0.000	Angle calibration for current at 100% of In

Table 224: CMMXU Non group settings (basic)

Name	Values (Range)	Unit	Step	Default	Description
IA_DbRepInt	1 - 300	Type	1	10	Cycl: Report interval (s), Db: In % of range, Int Db: In %s
Operation	Disabled Enabled	-	-	Disabled	Disbled/Enabled operation
IBase	1 - 99999	A	1	3000	Base setting for current level in A
IA_Max	0.000 - 10000000000.000	A	0.001	1000.000	Maximum value
IA_RepTyp	Cyclic Dead band Int deadband	-	-	Cyclic	Reporting type
IA_AngDbRepInt	1 - 300	Type	1	10	Cycl: Report interval (s), Db: In % of range, Int Db: In %s
IB_DbRepInt	1 - 300	Type	1	10	Cycl: Report interval (s), Db: In % of range, Int Db: In %s
IB_Max	0.000 - 10000000000.000	A	0.001	1000.000	Maximum value
IB_RepTyp	Cyclic Dead band Int deadband	-	-	Cyclic	Reporting type
IB_AngDbRepInt	1 - 300	Type	1	10	Cycl: Report interval (s), Db: In % of range, Int Db: In %s
IC_DbRepInt	1 - 300	Type	1	10	Cycl: Report interval (s), Db: In % of range, Int Db: In %s
IC_Max	0.000 - 10000000000.000	A	0.001	1000.000	Maximum value
IC_RepTyp	Cyclic Dead band Int deadband	-	-	Cyclic	Reporting type
IC_AngDbRepInt	1 - 300	Type	1	10	Cycl: Report interval (s), Db: In % of range, Int Db: In %s

Table 225: CMMXU Non group settings (advanced)

Name	Values (Range)	Unit	Step	Default	Description
IA_ZeroDb	0 - 100000	m%	1	0	Zero point clamping in 0.001% of range
IA_HiHiLim	0.000 - 10000000000.000	A	0.001	900.000	High High limit (physical value)
IA_HiLim	0.000 - 10000000000.000	A	0.001	800.000	High limit (physical value)
IMagComp5	-10.000 - 10.000	%	0.001	0.000	Magnitude factor to calibrate current at 5% of In
IMagComp30	-10.000 - 10.000	%	0.001	0.000	Magnitude factor to calibrate current at 30% of In
Table continues on next page					

Name	Values (Range)	Unit	Step	Default	Description
IA_LowLim	0.000 - 10000000000.000	A	0.001	0.000	Low limit (physical value)
IA_LowLowLim	0.000 - 10000000000.000	A	0.001	0.000	Low Low limit (physical value)
IMagComp100	-10.000 - 10.000	%	0.001	0.000	Magnitude factor to calibrate current at 100% of In
IAngComp5	-10.000 - 10.000	Deg	0.001	0.000	Angle calibration for current at 5% of In
IA_Min	0.000 - 10000000000.000	A	0.001	0.000	Minimum value
IAngComp30	-10.000 - 10.000	Deg	0.001	0.000	Angle calibration for current at 30% of In
IAngComp100	-10.000 - 10.000	Deg	0.001	0.000	Angle calibration for current at 100% of In
IA_LimHys	0.000 - 100.000	%	0.001	5.000	Hysteresis value in % of range and is common for all limits
IB_ZeroDb	0 - 100000	m%	1	0	Zero point clamping in 0.001% of range
IB_HiHiLim	0.000 - 10000000000.000	A	0.001	900.000	High High limit (physical value)
IB_HiLim	0.000 - 10000000000.000	A	0.001	800.000	High limit (physical value)
IB_LowLim	0.000 - 10000000000.000	A	0.001	0.000	Low limit (physical value)
IB_LowLowLim	0.000 - 10000000000.000	A	0.001	0.000	Low Low limit (physical value)
IB_Min	0.000 - 10000000000.000	A	0.001	0.000	Minimum value
IB_LimHys	0.000 - 100.000	%	0.001	5.000	Hysteresis value in % of range and is common for all limits
IC_ZeroDb	0 - 100000	m%	1	0	Zero point clamping in 0.001% of range
IC_HiHiLim	0.000 - 10000000000.000	A	0.001	900.000	High High limit (physical value)
IC_HiLim	0.000 - 10000000000.000	A	0.001	800.000	High limit (physical value)
IC_LowLim	0.000 - 10000000000.000	A	0.001	0.000	Low limit (physical value)
IC_LowLowLim	0.000 - 10000000000.000	A	0.001	0.000	Low Low limit (physical value)
IC_Min	0.000 - 10000000000.000	A	0.001	0.000	Minimum value
IC_LimHys	0.000 - 100.000	%	0.001	5.000	Hysteresis value in % of range and is common for all limits

Table 226: VNMMXU Non group settings (basic)

Name	Values (Range)	Unit	Step	Default	Description
VA_DbRepInt	1 - 300	Type	1	10	Cycl: Report interval (s), Db: In % of range, Int Db: In %s
Operation	Disabled Enabled	-	-	Disabled	Disbled/Enabled operation
VBase	0.05 - 2000.00	kV	0.05	400.00	Base setting for voltage level in kV
VA_Max	0.000 - 10000000000.000	V	0.001	300000.000	Maximum value
VA_RepTyp	Cyclic Dead band Int deadband	-	-	Cyclic	Reporting type
VA_LimHys	0.000 - 100.000	%	0.001	5.000	Hysteresis value in % of range and is common for all limits
VA_AnDbRepInt	1 - 300	Type	1	10	Cycl: Report interval (s), Db: In % of range, Int Db: In %s
VB_DbRepInt	1 - 300	Type	1	10	Cycl: Report interval (s), Db: In % of range, Int Db: In %s
VB_Max	0.000 - 10000000000.000	V	0.001	300000.000	Maximum value
VB_RepTyp	Cyclic Dead band Int deadband	-	-	Cyclic	Reporting type
VB_LimHys	0.000 - 100.000	%	0.001	5.000	Hysteresis value in % of range and is common for all limits
VB_AnDbRepInt	1 - 300	Type	1	10	Cycl: Report interval (s), Db: In % of range, Int Db: In %s
VC_DbRepInt	1 - 300	Type	1	10	Cycl: Report interval (s), Db: In % of range, Int Db: In %s
VC_Max	0.000 - 10000000000.000	V	0.001	300000.000	Maximum value
VC_RepTyp	Cyclic Dead band Int deadband	-	-	Cyclic	Reporting type
VC_LimHys	0.000 - 100.000	%	0.001	5.000	Hysteresis value in % of range and is common for all limits
VC_AnDbRepInt	1 - 300	Type	1	10	Cycl: Report interval (s), Db: In % of range, Int Db: In %s

Table 227: VNMMXU Non group settings (advanced)

Name	Values (Range)	Unit	Step	Default	Description
VA_ZeroDb	0 - 100000	m%	1	0	Zero point clamping in 0.001% of range
VA_HiHiLim	0.000 - 10000000000.000	V	0.001	260000.000	High High limit (physical value)
VA_HiLim	0.000 - 10000000000.000	V	0.001	240000.000	High limit (physical value)
VA_LowLim	0.000 - 10000000000.000	V	0.001	220000.000	Low limit (physical value)
VA_LowLowLim	0.000 - 10000000000.000	V	0.001	200000.000	Low Low limit (physical value)
VMagComp100	-10.000 - 10.000	%	0.001	0.000	Magnitude factor to calibrate voltage at 100% of Vn
VA_Min	0.000 - 10000000000.000	V	0.001	0.000	Minimum value
VB_ZeroDb	0 - 100000	m%	1	0	Zero point clamping in 0.001% of range
VB_HiHiLim	0.000 - 10000000000.000	V	0.001	260000.000	High High limit (physical value)
VB_HiLim	0.000 - 10000000000.000	V	0.001	240000.000	High limit (physical value)
VB_LowLim	0.000 - 10000000000.000	V	0.001	220000.000	Low limit (physical value)
VB_LowLowLim	0.000 - 10000000000.000	V	0.001	200000.000	Low Low limit (physical value)
VB_Min	0.000 - 10000000000.000	V	0.001	0.000	Minimum value
VC_ZeroDb	0 - 100000	m%	1	0	Zero point clamping in 0.001% of range
VC_HiHiLim	0.000 - 10000000000.000	V	0.001	260000.000	High High limit (physical value)
VC_HiLim	0.000 - 10000000000.000	V	0.001	240000.000	High limit (physical value)
VC_LowLim	0.000 - 10000000000.000	V	0.001	220000.000	Low limit (physical value)
VC_LowLowLim	0.000 - 10000000000.000	V	0.001	200000.000	Low Low limit (physical value)
VC_Min	0.000 - 10000000000.000	V	0.001	0.000	Minimum value

Table 228: VMMXU Non group settings (basic)

Name	Values (Range)	Unit	Step	Default	Description
VAB_DbRepInt	1 - 300	Type	1	10	Cycl: Report interval (s), Db: In % of range, Int Db: In %s
Operation	Disabled Enabled	-	-	Disabled	Disbled/Enabled operation
VBase	0.05 - 2000.00	kV	0.05	400.00	Base setting for voltage level in kV
VAB_Max	0.000 - 10000000000.000	V	0.001	500000.000	Maximum value
VAB_RepTyp	Cyclic Dead band Int deadband	-	-	Cyclic	Reporting type
VAB_AnDbRepInt	1 - 300	Type	1	10	Cycl: Report interval (s), Db: In % of range, Int Db: In %s
VBC_DbRepInt	1 - 300	Type	1	10	Cycl: Report interval (s), Db: In % of range, Int Db: In %s
VBC_Max	0.000 - 10000000000.000	V	0.001	500000.000	Maximum value
VBC_RepTyp	Cyclic Dead band Int deadband	-	-	Cyclic	Reporting type
VBC_AnDbRepInt	1 - 300	Type	1	10	Cycl: Report interval (s), Db: In % of range, Int Db: In %s
VCA_DbRepInt	1 - 300	Type	1	10	Cycl: Report interval (s), Db: In % of range, Int Db: In %s
VCA_Max	0.000 - 10000000000.000	V	0.001	500000.000	Maximum value
VCA_RepTyp	Cyclic Dead band Int deadband	-	-	Cyclic	Reporting type
VCA_AnDbRepInt	1 - 300	Type	1	10	Cycl: Report interval (s), Db: In % of range, Int Db: In %s

Table 229: VMMXU Non group settings (advanced)

Name	Values (Range)	Unit	Step	Default	Description
VAB_ZeroDb	0 - 100000	m%	1	0	Zero point clamping in 0.001% of range
VAB_HiHiLim	0.000 - 10000000000.000	V	0.001	450000.000	High High limit (physical value)
VAB_HiLim	0.000 - 10000000000.000	V	0.001	420000.000	High limit (physical value)
VAB_LowLim	0.000 - 10000000000.000	V	0.001	380000.000	Low limit (physical value)
VAB_LowLowLim	0.000 - 10000000000.000	V	0.001	350000.000	Low Low limit (physical value)

Table continues on next page

Name	Values (Range)	Unit	Step	Default	Description
VMagComp100	-10.000 - 10.000	%	0.001	0.000	Magnitude factor to calibrate voltage at 100% of Vn
VAB_Min	0.000 - 10000000000.000	V	0.001	0.000	Minimum value
VAB_LimHys	0.000 - 100.000	%	0.001	5.000	Hysteresis value in % of range and is common for all limits
VBC_ZeroDb	0 - 100000	m%	1	0	Zero point clamping in 0.001% of range
VBC_HiHiLim	0.000 - 10000000000.000	V	0.001	450000.000	High High limit (physical value)
VBC_HiLim	0.000 - 10000000000.000	V	0.001	420000.000	High limit (physical value)
VBC_LowLim	0.000 - 10000000000.000	V	0.001	380000.000	Low limit (physical value)
VBC_LowLowLim	0.000 - 10000000000.000	V	0.001	350000.000	Low Low limit (physical value)
VBC_Min	0.000 - 10000000000.000	V	0.001	0.000	Minimum value
VBC_LimHys	0.000 - 100.000	%	0.001	5.000	Hysteresis value in % of range and is common for all limits
VCA_ZeroDb	0 - 100000	m%	1	0	Zero point clamping in 0.001% of range
VCA_HiHiLim	0.000 - 10000000000.000	V	0.001	450000.000	High High limit (physical value)
VCA_HiLim	0.000 - 10000000000.000	V	0.001	420000.000	High limit (physical value)
VCA_LowLim	0.000 - 10000000000.000	V	0.001	380000.000	Low limit (physical value)
VCA_LowLowLim	0.000 - 10000000000.000	V	0.001	350000.000	Low Low limit (physical value)
VCA_Min	0.000 - 10000000000.000	V	0.001	0.000	Minimum value
VCA_LimHys	0.000 - 100.000	%	0.001	5.000	Hysteresis value in % of range and is common for all limits

Table 230: CMSQI Non group settings (basic)

Name	Values (Range)	Unit	Step	Default	Description
3I0DbRepInt	1 - 300	Type	1	10	Cycl: Report interval (s), Db: In % of range, Int Db: In %s
3I0Min	0.000 - 10000000000.000	A	0.001	0.000	Minimum value
3I0Max	0.000 - 10000000000.000	A	0.001	1000.000	Maximum value

Table continues on next page

Name	Values (Range)	Unit	Step	Default	Description
3I0RepTyp	Cyclic Dead band Int deadband	-	-	Cyclic	Reporting type
3I0LimHys	0.000 - 100.000	%	0.001	5.000	Hysteresis value in % of range and is common for all limits
3I0AngDbRepInt	1 - 300	Type	1	10	Cycl: Report interval (s), Db: In % of range, Int Db: In %s
Operation	Disabled Enabled	-	-	Disabled	Disbled/Enabled operation
3I0AngMin	-180.000 - 180.000	Deg	0.001	-180.000	Minimum value
3I0AngMax	-180.000 - 180.000	Deg	0.001	180.000	Maximum value
3I0AngRepTyp	Cyclic Dead band Int deadband	-	-	Cyclic	Reporting type
I1DbRepInt	1 - 300	Type	1	10	Cycl: Report interval (s), Db: In % of range, Int Db: In %s
I1Min	0.000 - 10000000000.000	A	0.001	0.000	Minimum value
I1Max	0.000 - 10000000000.000	A	0.001	1000.000	Maximum value
I1RepTyp	Cyclic Dead band Int deadband	-	-	Cyclic	Reporting type
I1AngDbRepInt	1 - 300	Type	1	10	Cycl: Report interval (s), Db: In % of range, Int Db: In %s
I1AngMax	-180.000 - 180.000	Deg	0.001	180.000	Maximum value
I1AngRepTyp	Cyclic Dead band Int deadband	-	-	Cyclic	Reporting type
I2DbRepInt	1 - 300	Type	1	10	Cycl: Report interval (s), Db: In % of range, Int Db: In %s
I2Min	0.000 - 10000000000.000	A	0.001	0.000	Minimum value
I2Max	0.000 - 10000000000.000	A	0.001	1000.000	Maximum value
I2RepTyp	Cyclic Dead band Int deadband	-	-	Cyclic	Reporting type
I2LimHys	0.000 - 100.000	%	0.001	5.000	Hysteresis value in % of range and is common for all limits
I2AngDbRepInt	1 - 300	Type	1	10	Cycl: Report interval (s), Db: In % of range, Int Db: In %s
I2AngMin	-180.000 - 180.000	Deg	0.001	-180.000	Minimum value
I2AngRepTyp	Cyclic Dead band Int deadband	-	-	Cyclic	Reporting type

Table 231: CMSQI Non group settings (advanced)

Name	Values (Range)	Unit	Step	Default	Description
3I0ZeroDb	0 - 100000	m%	1	0	Zero point clamping in 0.001% of range
3I0HiHiLim	0.000 - 10000000000.000	A	0.001	900.000	High High limit (physical value)
3I0HiLim	0.000 - 10000000000.000	A	0.001	800.000	High limit (physical value)
3I0LowLim	0.000 - 10000000000.000	A	0.001	0.000	Low limit (physical value)
3I0LowLowLim	0.000 - 10000000000.000	A	0.001	0.000	Low Low limit (physical value)
3I0AngZeroDb	0 - 100000	m%	1	0	Zero point clamping in 0.001% of range
I1ZeroDb	0 - 100000	m%	1	0	Zero point clamping in 0.001% of range
I1HiHiLim	0.000 - 10000000000.000	A	0.001	900.000	High High limit (physical value)
I1HiLim	0.000 - 10000000000.000	A	0.001	800.000	High limit (physical value)
I1LowLim	0.000 - 10000000000.000	A	0.001	0.000	Low limit (physical value)
I1LowLowLim	0.000 - 10000000000.000	A	0.001	0.000	Low Low limit (physical value)
I1LimHys	0.000 - 100.000	%	0.001	5.000	Hysteresis value in % of range and is common for all limits
I1AngZeroDb	0 - 100000	m%	1	0	Zero point clamping in 0.001% of range
I1AngMin	-180.000 - 180.000	Deg	0.001	-180.000	Minimum value
I2ZeroDb	0 - 100000	m%	1	0	Zero point clamping in 0.001% of range
I2HiHiLim	0.000 - 10000000000.000	A	0.001	900.000	High High limit (physical value)
I2HiLim	0.000 - 10000000000.000	A	0.001	800.000	High limit (physical value)
I2LowLim	0.000 - 10000000000.000	A	0.001	0.000	Low limit (physical value)
I2LowLowLim	0.000 - 10000000000.000	A	0.001	0.000	Low Low limit (physical value)
I2AngZeroDb	0 - 100000	m%	1	0	Zero point clamping in 0.001% of range
I2AngMax	-180.000 - 180.000	Deg	0.001	180.000	Maximum value

Table 232: VMSQI Non group settings (basic)

Name	Values (Range)	Unit	Step	Default	Description
3V0DbRepInt	1 - 300	Type	1	10	Cycl: Report interval (s), Db: In % of range, Int Db: In %s
3V0Min	0.000 - 10000000000.000	V	0.001	0.000	Minimum value
3V0Max	0.000 - 10000000000.000	V	0.001	300000.000	Maximum value
3V0RepTyp	Cyclic Dead band Int deadband	-	-	Cyclic	Reporting type
3V0LimHys	0.000 - 100.000	%	0.001	5.000	Hysteresis value in % of range and is common for all limits
3V0AngDbRepInt	1 - 300	Type	1	10	Cycl: Report interval (s), Db: In % of range, Int Db: In %s
Operation	Disabled Enabled	-	-	Disabled	Disbled/Enabled operation
3V0AngZeroDb	0 - 100000	m%	1	0	Zero point clamping in 0.001% of range
3V0AngMin	-180.000 - 180.000	Deg	0.001	-180.000	Minimum value
3V0AngMax	-180.000 - 180.000	Deg	0.001	180.000	Maximum value
3V0AngRepTyp	Cyclic Dead band Int deadband	-	-	Cyclic	Reporting type
V1DbRepInt	1 - 300	Type	1	10	Cycl: Report interval (s), Db: In % of range, Int Db: In %s
V1Min	0.000 - 10000000000.000	V	0.001	0.000	Minimum value
V1Max	0.000 - 10000000000.000	V	0.001	300000.000	Maximum value
V1RepTyp	Cyclic Dead band Int deadband	-	-	Cyclic	Reporting type
V1LimHys	0.000 - 100.000	%	0.001	5.000	Hysteresis value in % of range and is common for all limits
V1AngDbRepInt	1 - 300	Type	1	10	Cycl: Report interval (s), Db: In % of range, Int Db: In %s
V2DbRepInt	1 - 300	Type	1	10	Cycl: Report interval (s), Db: In % of range, Int Db: In %s
V2Min	0.000 - 10000000000.000	V	0.001	0.000	Minimum value
V2Max	0.000 - 10000000000.000	V	0.001	300000.000	Maximum value
V2RepTyp	Cyclic Dead band Int deadband	-	-	Cyclic	Reporting type

Table continues on next page

Name	Values (Range)	Unit	Step	Default	Description
V2LimHys	0.000 - 100.000	%	0.001	5.000	Hysteresis value in % of range and is common for all limits
V2AngDbRepInt	1 - 300	Type	1	10	Cycl: Report interval (s), Db: In % of range, Int Db: In %s
V2AngMin	-180.000 - 180.000	Deg	0.001	-180.000	Minimum value
V2AngMax	-180.000 - 180.000	Deg	0.001	180.000	Maximum value
V2AngRepTyp	Cyclic Dead band Int deadband	-	-	Cyclic	Reporting type
UAmpPreComp5	-10.000 - 10.000	%	0.001	0.000	Amplitude factor to pre-calibrate voltage at 5% of Ir
UAmpPreComp30	-10.000 - 10.000	%	0.001	0.000	Amplitude factor to pre-calibrate voltage at 30% of Ir
UAmpPreComp100	-10.000 - 10.000	%	0.001	0.000	Amplitude factor to pre-calibrate voltage at 100% of Ir

Table 233: VMSQI Non group settings (advanced)

Name	Values (Range)	Unit	Step	Default	Description
3V0ZeroDb	0 - 100000	m%	1	0	Zero point clamping in 0.001% of range
3V0HiHiLim	0.000 - 10000000000.000	V	0.001	260000.000	High High limit (physical value)
3V0HiLim	0.000 - 10000000000.000	V	0.001	240000.000	High limit (physical value)
3V0LowLim	0.000 - 10000000000.000	V	0.001	220000.000	Low limit (physical value)
3V0LowLowLim	0.000 - 10000000000.000	V	0.001	200000.000	Low Low limit (physical value)
V1ZeroDb	0 - 100000	m%	1	0	Zero point clamping in 0.001% of range
V1HiHiLim	0.000 - 10000000000.000	V	0.001	260000.000	High High limit (physical value)
V1HiLim	0.000 - 10000000000.000	V	0.001	240000.000	High limit (physical value)
V1LowLim	0.000 - 10000000000.000	V	0.001	220000.000	Low limit (physical value)
V1LowLowLim	0.000 - 10000000000.000	V	0.001	200000.000	Low Low limit (physical value)
V1AngZeroDb	0 - 100000	m%	1	0	Zero point clamping in 0.001% of range
V1AngMin	-180.000 - 180.000	Deg	0.001	-180.000	Minimum value
V1AngMax	-180.000 - 180.000	Deg	0.001	180.000	Maximum value
V1AngRepTyp	Cyclic Dead band Int deadband	-	-	Cyclic	Reporting type

Table continues on next page

Name	Values (Range)	Unit	Step	Default	Description
V2ZeroDb	0 - 100000	m%	1	0	Zero point clamping in 0.001% of range
V2HiHiLim	0.000 - 10000000000.000	V	0.001	260000.000	High High limit (physical value)
V2HiLim	0.000 - 10000000000.000	V	0.001	240000.000	High limit (physical value)
V2LowLim	0.000 - 10000000000.000	V	0.001	220000.000	Low limit (physical value)
V2LowLowLim	0.000 - 10000000000.000	V	0.001	200000.000	Low Low limit (physical value)
V2AngZeroDb	0 - 100000	m%	1	0	Zero point clamping in 0.001% of range

3.15.2 Event counter CNTGGIO

3.15.2.1 Identification

Function description	IEC 61850 identification	IEC 60617 identification	ANSI/IEEE C37.2 device number
Event counter	CNTGGIO		-

3.15.2.2 Application

Event counter (CNTGGIO) has six counters which are used for storing the number of times each counter has been activated. CNTGGIO can be used to count how many times a specific function, for example the tripping logic, has issued a trip signal. All six counters have a common blocking and resetting feature.

3.15.2.3 Setting parameters

The function does not have any parameters available in Local HMI or Protection and Control IED Manager (PCM600)

3.15.3 Event function EVENT

Function description	IEC 61850 identification	IEC 60617 identification	ANSI/IEEE C37.2 device number
Event function	EVENT		-

3.15.3.1 Introduction

When using a Substation Automation system with LON or SPA communication, time-tagged events can be sent at change or cyclically from the IED to the station level. These events are created from any available signal in the IED that is connected to the Event function (EVENT). The event function block is used for remote communication.

Analog and double indication values are also transferred through EVENT function.

3.15.3.2 Setting guidelines

The parameters for the Event (EVENT) function are set via the local HMI or PCM600.

EventMask (Ch_1 - 16)
The inputs can be set individually as:

- *NoEvents*
- *OnSet*, at pick-up of the signal
- *OnReset*, at drop-out of the signal
- *OnChange*, at both pick-up and drop-out of the signal
- *AutoDetect*

LONChannelMask or *SPAChannelMask*
Definition of which part of the event function block that shall generate events:

- *Disabled*
- *Channel 1-8*
- *Channel 9-16*
- *Channel 1-16*

MinRepIntVal (1 - 16)
A time interval between cyclic events can be set individually for each input channel. This can be set between 0.0 s to 1000.0 s in steps of 0.1 s. It should normally be set to 0, that is, no cyclic communication.

It is important to set the time interval for cyclic events in an optimized way to minimize the load on the station bus.

3.15.3.3 Setting parameters

Table 234: EVENT Non group settings (basic)

Name	Values (Range)	Unit	Step	Default	Description
SPAChannelMask	Disabled Channel 1-8 Channel 9-16 Channel 1-16	-	-	Disabled	SPA channel mask
LONChannelMask	Disabled Channel 1-8 Channel 9-16 Channel 1-16	-	-	Disabled	LON channel mask
EventMask1	NoEvents OnSet OnReset OnChange AutoDetect	-	-	AutoDetect	Reporting criteria for input 1
EventMask2	NoEvents OnSet OnReset OnChange AutoDetect	-	-	AutoDetect	Reporting criteria for input 2
EventMask3	NoEvents OnSet OnReset OnChange AutoDetect	-	-	AutoDetect	Reporting criteria for input 3
EventMask4	NoEvents OnSet OnReset OnChange AutoDetect	-	-	AutoDetect	Reporting criteria for input 4
EventMask5	NoEvents OnSet OnReset OnChange AutoDetect	-	-	AutoDetect	Reporting criteria for input 5
EventMask6	NoEvents OnSet OnReset OnChange AutoDetect	-	-	AutoDetect	Reporting criteria for input 6
EventMask7	NoEvents OnSet OnReset OnChange AutoDetect	-	-	AutoDetect	Reporting criteria for input 7
EventMask8	NoEvents OnSet OnReset OnChange AutoDetect	-	-	AutoDetect	Reporting criteria for input 8

Table continues on next page

Name	Values (Range)	Unit	Step	Default	Description
EventMask9	NoEvents OnSet OnReset OnChange AutoDetect	-	-	AutoDetect	Reporting criteria for input 9
EventMask10	NoEvents OnSet OnReset OnChange AutoDetect	-	-	AutoDetect	Reporting criteria for input 10
EventMask11	NoEvents OnSet OnReset OnChange AutoDetect	-	-	AutoDetect	Reporting criteria for input 11
EventMask12	NoEvents OnSet OnReset OnChange AutoDetect	-	-	AutoDetect	Reporting criteria for input 12
EventMask13	NoEvents OnSet OnReset OnChange AutoDetect	-	-	AutoDetect	Reporting criteria for input 13
EventMask14	NoEvents OnSet OnReset OnChange AutoDetect	-	-	AutoDetect	Reporting criteria for input 14
EventMask15	NoEvents OnSet OnReset OnChange AutoDetect	-	-	AutoDetect	Reporting criteria for input 15
EventMask16	NoEvents OnSet OnReset OnChange AutoDetect	-	-	AutoDetect	Reporting criteria for input 16
MinRepIntVal1	0 - 3600	s	1	2	Minimum reporting interval input 1
MinRepIntVal2	0 - 3600	s	1	2	Minimum reporting interval input 2
MinRepIntVal3	0 - 3600	s	1	2	Minimum reporting interval input 3
MinRepIntVal4	0 - 3600	s	1	2	Minimum reporting interval input 4
MinRepIntVal5	0 - 3600	s	1	2	Minimum reporting interval input 5
MinRepIntVal6	0 - 3600	s	1	2	Minimum reporting interval input 6
MinRepIntVal7	0 - 3600	s	1	2	Minimum reporting interval input 7
MinRepIntVal8	0 - 3600	s	1	2	Minimum reporting interval input 8
MinRepIntVal9	0 - 3600	s	1	2	Minimum reporting interval input 9

Table continues on next page

Name	Values (Range)	Unit	Step	Default	Description
MinRepIntVal10	0 - 3600	s	1	2	Minimum reporting interval input 10
MinRepIntVal11	0 - 3600	s	1	2	Minimum reporting interval input 11
MinRepIntVal12	0 - 3600	s	1	2	Minimum reporting interval input 12
MinRepIntVal13	0 - 3600	s	1	2	Minimum reporting interval input 13
MinRepIntVal14	0 - 3600	s	1	2	Minimum reporting interval input 14
MinRepIntVal15	0 - 3600	s	1	2	Minimum reporting interval input 15
MinRepIntVal16	0 - 3600	s	1	2	Minimum reporting interval input 16

3.15.4 Logical signal status report BINSTATREP

Function description	IEC 61850 identification	IEC 60617 identification	ANSI/IEEE C37.2 device number
Logical signal status report	BINSTATREP	-	-

3.15.4.1 Application

The Logical signal status report (BINSTATREP) function makes it possible for a SPA master to poll signals from various other function blocks.

BINSTATREP has 16 inputs and 16 outputs. The output status follows the inputs and can be read from the local HMI or via SPA communication.

When an input is set, the respective output is set for a user defined time. If the input signal remains set for a longer period, the output will remain set until the input signal resets.

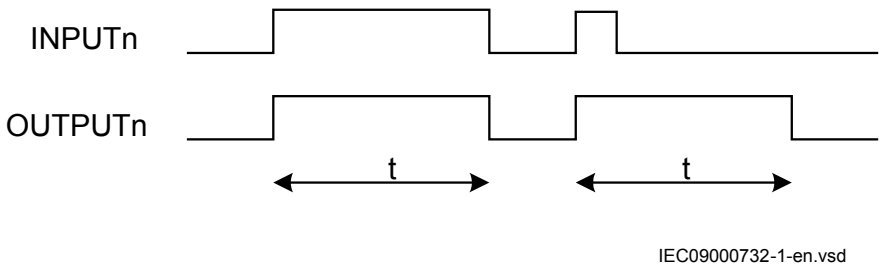

Figure 319: BINSTATREP logical diagram

3.15.4.2 Setting guidelines

The pulse time *t* is the only setting for the Logical signal status report (BINSTATREP). Each output can be set or reset individually, but the pulse time will be the same for all outputs in the entire BINSTATREP function.

3.15.4.3 Setting parameters

Table 235: BINSTATREP Non group settings (basic)

Name	Values (Range)	Unit	Step	Default	Description
t	0.000 - 60000.000	s	0.001	10.000	Time delay of function

3.15.5 Fault locator LMBRFLO

Function description	IEC 61850 identification	IEC 60617 identification	ANSI/IEEE C37.2 device number
Fault locator	LMBRFLO	-	-

3.15.5.1 Application

The main objective of line protection and monitoring IEDs is fast, selective and reliable operation for faults on a protected line section. Besides this, information on distance to fault is very important for those involved in operation and maintenance. Reliable information on the fault location greatly decreases the downtime of the protected lines and increases the total availability of a power system.

The fault locator is started with the input CALCDIST to which trip signals indicating in-line faults are connected, typically distance protection zone 1 and accelerating zone or the line differential protection. The disturbance report must also be started for the same faults since the function uses pre- and post-fault information from the trip value recorder function (TVR).

Beside this information the function must be informed about faulted phases for correct loop selection (phase selective outputs from differential protection, distance protection, directional OC protection, and so on). The following loops are used for different types of faults:

- for 3 phase faults: loop A-B.
- for 2 phase faults: the loop between the faulted phases.
- for 2 phase-to-ground faults: the loop between the faulted phases.
- for phase-to-ground faults: the phase-to-ground loop.

LMBRFLO function indicates the distance to fault as a percentage of the line length, in kilometers or miles as selected on the local HMI. *LineLengthUnit* setting is used to select the unit of length either, in *kilometer* or *miles* for the distance to fault. The distance to the fault, which is calculated with a high accuracy, is stored together with the recorded disturbances. This information can be read on the local HMI, uploaded to PCM600 and is available on the station bus according to IEC 61850–8–1.

The distance to fault can be recalculated on the local HMI by using the measuring algorithm for different fault loops or for changed system parameters.

3.15.5.2 Setting guidelines

The parameters for the Fault locator function are set via the local HMI or PCM600.

The Fault locator algorithm uses phase voltages, phase currents and residual current in observed bay (protected line) and residual current from a parallel bay (line, which is mutual coupled to protected line).

The Fault locator has close connection to the Disturbance report function. All external analog inputs (channel 1-30), connected to the Disturbance report function, are available to the Fault locator and the function uses information calculated by the Trip value recorder. After allocation of analog inputs to the Disturbance report function, the user has to point out which analog inputs to be used by the Fault locator. According to the default settings the first four analog inputs are currents and next three are voltages in the observed bay (no parallel line expected since chosen input is set to zero). Use the Parameter Setting tool within PCM600 for changing analog configuration.

The list of parameters explains the meaning of the abbreviations. Figure 320 also presents these system parameters graphically. Note, that all impedance values relate to their primary values and to the total length of the protected line.

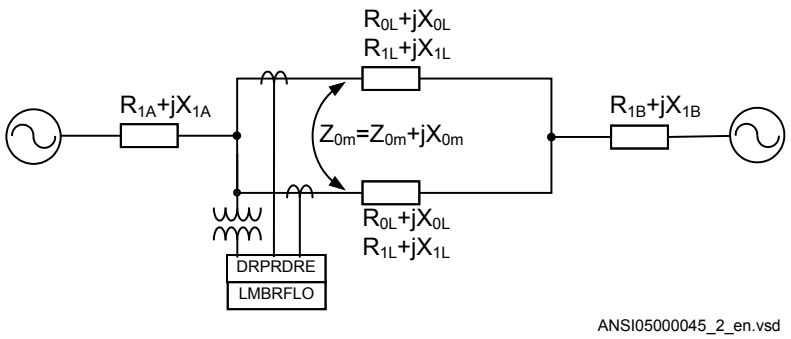

Figure 320: Simplified network configuration with network data, required for settings of the fault location-measuring function

For a single-circuit line (no parallel line), the figures for mutual zero-sequence impedance (X_{0M}, R_{0M}) and analog input are set at zero.

Power system specific parameter settings shown in table 2 are not general settings but specific setting included in the setting groups, that is, this makes it possible to change conditions for the Fault locator with short notice by changing setting group.

The source impedance is not constant in the network. However, this has a minor influence on the accuracy of the distance-to-fault calculation, because only the phase angle of the distribution factor has an influence on the accuracy. The phase angle of the distribution factor is normally very low and practically constant, because the positive sequence line impedance, which has an angle close to 90°, dominates it. Always set the source impedance resistance to values other than zero. If the actual values are not known, the values that correspond to the source impedance characteristic angle of 85° give satisfactory results.

Connection of analog currents

Connection diagram for analog currents included IN from parallel line shown in figure 321

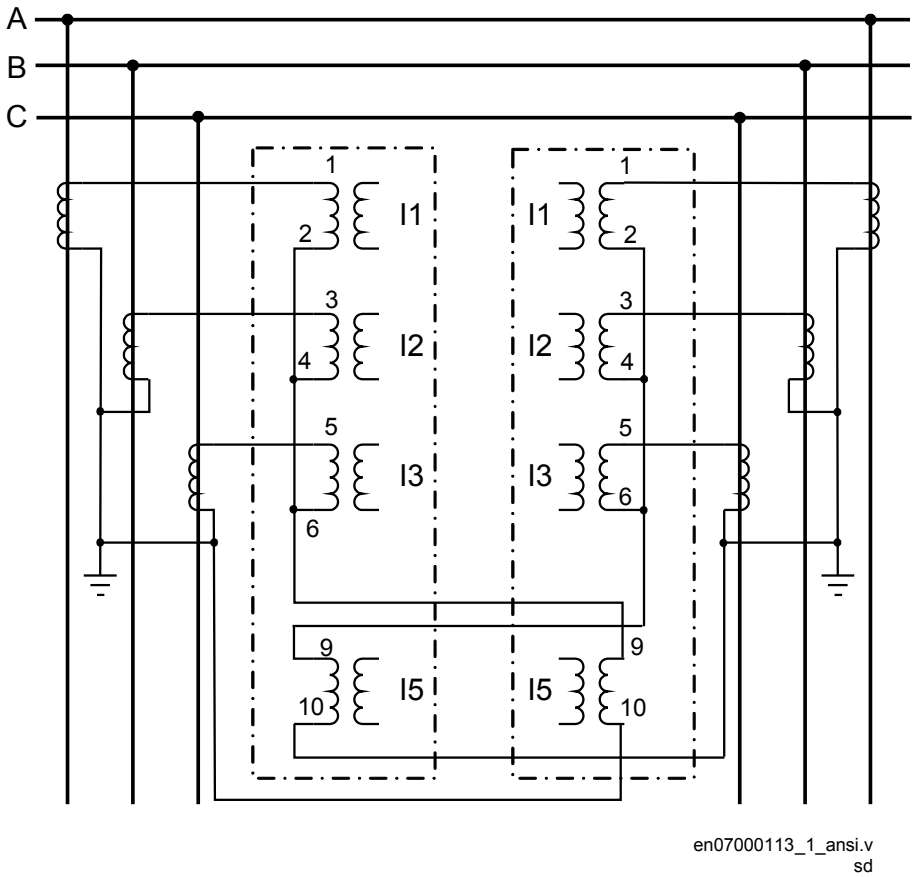

Figure 321: Example of connection of parallel line IN for Fault locator LMBRFLO

3.15.5.3 Setting parameters

Table 236: LMBRFLO Group settings (basic)

Name	Values (Range)	Unit	Step	Default	Description
R1A	0.001 - 1500.000	ohm/p	0.001	2.000	Source resistance A (near end)
X1A	0.001 - 1500.000	ohm/p	0.001	12.000	Source reactance A (near end)
R1B	0.001 - 1500.000	ohm/p	0.001	2.000	Source resistance B (far end)
X1B	0.001 - 1500.000	ohm/p	0.001	12.000	Source reactance B (far end)
R1L	0.001 - 1500.000	ohm/p	0.001	2.000	Positive sequence line resistance
X1L	0.001 - 1500.000	ohm/p	0.001	12.500	Positive sequence line reactance
R0L	0.001 - 1500.000	ohm/p	0.001	8.750	Zero sequence line resistance
X0L	0.001 - 1500.000	ohm/p	0.001	50.000	Zero sequence line reactance
Table continues on next page					

Name	Values (Range)	Unit	Step	Default	Description
R0M	0.000 - 1500.000	ohm/p	0.001	0.000	Zero sequence mutual resistance
X0M	0.000 - 1500.000	ohm/p	0.001	0.000	Zero sequence mutual reactance
LineLength	0.0 - 10000.0	-	0.1	40.0	Length of line

Table 237: LMBRFLO Non group settings (basic)

Name	Values (Range)	Unit	Step	Default	Description
DrepChNoI_A	1 - 30	Ch	1	1	Recorder Input number recording phase current, IA
DrepChNoI_B	1 - 30	Ch	1	2	Recorder Input number recording phase current, IB
DrepChNoI_C	1 - 30	Ch	1	3	Recorder Input number recording phase current, IC
DrepChNoIN	0 - 30	Ch	1	4	Recorder input number recording residual current, IN
DrepChNoIP	0 - 30	Ch	1	0	Recorder input number recording 3I0 on parallel line
DrepChNoV_A	1 - 30	Ch	1	5	Recorder Input number recording phase voltage, VA
DrepChNoV_B	1 - 30	Ch	1	6	Recorder Input number recording phase voltage, VB
DrepChNoV_C	1 - 30	Ch	1	7	Recorder Input number recording phase voltage, VC

3.15.6 Measured value expander block RANGE_XP

Function description	IEC 61850 identification	IEC 60617 identification	ANSI/IEEE C37.2 device number
Measured value expander block	RANGE_XP	-	-

3.15.6.1 Application

The current and voltage measurements functions (CVMMXN, CMMXU, VMMXU and VNMMXU), current and voltage sequence measurement functions (CMSQI and VMSQI) and IEC 61850 generic communication I/O functions (MVGGIO) are provided with measurement supervision functionality. All measured values can be supervised with four settable limits, that is low-low limit, low limit, high limit and high-high limit. The measure value expander block (RANGE_XP) has been introduced to be able to translate the integer output signal from the measuring functions to 5 binary signals, that is below low-low limit, below low limit, normal, above high-high limit or above high limit. The output signals can be used as conditions in the configurable logic.

3.15.6.2 Setting guidelines

There are no settable parameters for the measured value expander block function.

3.15.7 Disturbance report DRPRDRE

Function description	IEC 61850 identification	IEC 60617 identification	ANSI/IEEE C37.2 device number
Analog input signals	A41RADR	-	-
Disturbance report	DRPRDRE	-	-
Disturbance report	A1RADR	-	-
Disturbance report	A4RADR	-	-
Disturbance report	B1RBDR	-	-

3.15.7.1 Application

To get fast, complete and reliable information about disturbances in the primary and/or in the secondary system it is very important to gather information on fault currents, voltages and events. It is also important having a continuous event-logging to be able to monitor in an overview perspective. These tasks are accomplished by the disturbance report function DRPRDRE and facilitate a better understanding of the power system behavior and related primary and secondary equipment during and after a disturbance. An analysis of the recorded data provides valuable information that can be used to explain a disturbance, basis for change of IED setting plan, improve existing equipment, and so on. This information can also be used in a longer perspective when planning for and designing new installations, that is, a disturbance recording could be a part of Functional Analysis (FA).

Disturbance report DRPRDRE, always included in the IED, acquires sampled data of all selected analog and binary signals connected to the function blocks that is,

- maximum 30 external analog signals,
- 10 internal derived analog signals, and
- 96 binary signals.

Disturbance report function is a common name for several functions that is, Indications (IND), Event recorder (ER), Sequential of events (SOE), Trip value recorder (TVR), Disturbance recorder (DR) and Fault locator (FL).

Disturbance report function is characterized by great flexibility as far as configuration, starting conditions, recording times, and large storage capacity are concerned. Thus, disturbance report is not dependent on the operation of protective functions, and it can

record disturbances that were not discovered by protective functions for one reason or another. Disturbance report can be used as an advanced stand-alone disturbance recorder.

Every disturbance report recording is saved in the IED. The same applies to all events, which are continuously saved in a ring-buffer. Local HMI can be used to get information about the recordings, and the disturbance report files may be uploaded in the PCM600 using the Disturbance handling tool, for report reading or further analysis (using WaveWin, that can be found on the PCM600 installation CD). The user can also upload disturbance report files using FTP or MMS (over 61850–8–1) clients.

If the IED is connected to a station bus (IEC 61850-8-1), the disturbance recorder (record made and fault number) and the fault locator information are available as GOOSE or Report Control data. The same information is obtainable if IEC60870-5-103 is used.

3.15.7.2 Setting guidelines

The setting parameters for the Disturbance report function DRPRDRE are set via the local HMI or PCM600.

It is possible to handle up to 40 analog and 96 binary signals, either internal signals or signals coming from external inputs. The binary signals are identical in all functions that is, Disturbance recorder (DR), Event recorder (ER), Indication (IND), Trip value recorder (TVR) and Sequential of events (SOE) function.

User-defined names of binary and analog input signals is set using PCM600. The analog and binary signals appear with their user-defined names. The name is used in all related functions (Disturbance recorder (DR), Event recorder (ER), Indication (IND), Trip value recorder (TVR) and Sequential of events (SOE)).

Figure 322 shows the relations between Disturbance report, included functions and function blocks. Sequential of events (SOE), Event recorder (ER) and Indication (IND) uses information from the binary input function blocks (BxRBDR). Trip value recorder (TVR) uses analog information from the analog input function blocks (AxRADR), which is used by Fault locator (FL) after estimation by Trip Value Recorder (TVR). Disturbance report function acquires information from both AxRADR and BxRBDR.

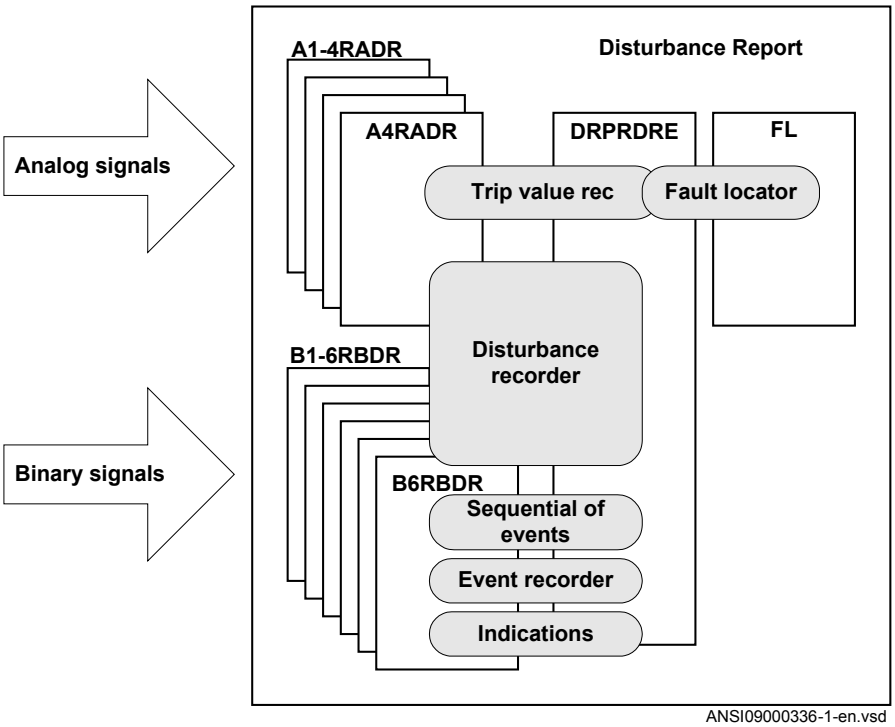

Figure 322: Disturbance report functions and related function blocks

For Disturbance report function there are a number of settings which also influences the sub-functions.

Three LED indications placed above the LCD screen makes it possible to get quick status information about the IED.

Green LED:	
Steady light	In Service
Flashing light	Internal failure
Dark	No power supply
Yellow LED:	
Steady light	A Disturbance Report is triggered
Flashing light	The IED is in test mode
Red LED:	
Steady light	Triggered on binary signal N with *SetLEDN* = *Enabled*

Operation

The operation of Disturbance report function DRPRDRE has to be set *Enabled* or *Disabled*. If *Disabled* is selected, note that no disturbance report is registered, and none sub-function will operate (the only general parameter that influences Sequential of events (SOE)).

Operation = Disabled:

- Disturbance reports are not stored.
- LED information (yellow - pickup, red - trip) is not stored or changed.

Operation = Enabled:

- Disturbance reports are stored, disturbance data can be read from the local HMI and from a PC using PCM600.
- LED information (yellow - pickup, red - trip) is stored.

Every recording will get a number (0 to 999) which is used as identifier (local HMI, disturbance handling tool and IEC 61850). An alternative recording identification is date, time and sequence number. The sequence number is automatically increased by one for each new recording and is reset to zero at midnight. The maximum number of recordings stored in the IED is 100. The oldest recording will be overwritten when a new recording arrives (FIFO).

To be able to delete disturbance records, *Operation* parameter has to be *Enabled*.

The maximum number of recordings depend on each recordings total recording time. Long recording time will reduce the number of recordings to less than 100.

The IED flash disk should NOT be used to store any user files. This might cause disturbance recordings to be deleted due to lack of disk space.

Recording times

Prefault recording time (*PreFaultRecT*) is the recording time before the starting point of the disturbance. The setting should be at least *0.1* s to ensure enough samples for the estimation of pre-fault values in the Trip value recorder (TVR) function.

Postfault recording time (*PostFaultRecT*) is the maximum recording time after the disappearance of the trig-signal (does not influence the Trip value recorder (TVR) function).

Recording time limit (*TimeLimit*) is the maximum recording time after trig. The parameter limits the recording time if some trigging condition (fault-time) is very long or permanently set (does not influence the Trip value recorder (TVR) function).

Post retrigger (*PostRetrig*) can be set to *Enabled* or *Disabled*. Makes it possible to choose performance of Disturbance report function if a new trig signal appears in the post-fault window.

PostRetrig = Disabled

The function is insensitive for new trig signals during post fault time.

PostRetrig = Enabled

The function completes current report and starts a new complete report that is, the latter will include:

- new pre-fault- and fault-time (which will overlap previous report)
- events and indications might be saved in the previous report too, due to overlap
- new fault locator and trip value calculations if installed, in operation and started

Operation in test mode

If the IED is in test mode and *OpModeTest = Disabled*. Disturbance report function does not save any recordings and no LED information is displayed.

If the IED is in test mode and *OpModeTest = Enabled*. Disturbance report function works in normal mode and the status is indicated in the saved recording.

Binary input signals

Up to 96 binary signals can be selected among internal logical and binary input signals. The configuration tool is used to configure the signals.

For each of the 96 signals, it is also possible to select if the signal is to be used as a trigger for the start of the Disturbance report and if the trigger should be activated on positive (1) or negative (0) slope.

TrigDRN: Disturbance report may trig for binary input N (*Enabled*) or not (*Disabled*).

TrigLevelN: Trig on positive (*Trig on 1*) or negative (*Trig on 0*) slope for binary input N.

Func103N: Function type number (0-255) for binary input N according to IEC-60870-5-103, that is, 128: Distance protection, 160: overcurrent protection, 176: transformer differential protection and 192: line differential protection.

Info103N: Information number (0-255) for binary input N according to IEC-60870-5-103, that is, 69-71: Trip L1-L3, 78-83: Zone 1-6.

See also description in the chapter IEC 60870-5-103.

Analog input signals

Up to 40 analog signals can be selected among internal analog and analog input signals. PCM600 is used to configure the signals.

For retrieving remote data from LDCM module, the Disturbance report function should not be connected to a 3 ms SMAI function block if this is the only intended use for the remote data.

The analog trigger of Disturbance report is not affected if analog input M is to be included in the disturbance recording or not (*OperationM = Enabled*/*Disabled*).

If *OperationM = Disabled*, no waveform (samples) will be recorded and reported in graph. However, Trip value, pre-fault and fault value will be recorded and reported. The input channel can still be used to trig the disturbance recorder.

If *OperationM = Enabled*, waveform (samples) will also be recorded and reported in graph.

NomValueM: Nominal value for input M.

OverTrigOpM, *UnderTrigOpM*: Over or Under trig operation, Disturbance report may trig for high/low level of analog input M (*Enabled*) or not (*Disabled*).

OverTrigLeM, *UnderTrigLeM*: Over or under trig level, Trig high/low level relative nominal value for analog input M in percent of nominal value.

Sub-function parameters

All functions are in operation as long as Disturbance report is in operation.

Indications

IndicationMaN: Indication mask for binary input N. If set (*Show*), a status change of that particular input, will be fetched and shown in the disturbance summary on local HMI. If not set (*Hide*), status change will not be indicated.

SetLEDN: Set red LED on local HMI in front of the IED if binary input N changes status.

Disturbance recorder

OperationM: Analog channel M is to be recorded by the disturbance recorder (*Enabled*) or not (*Disabled*).

If *OperationM = Disabled*, no waveform (samples) will be recorded and reported in graph. However, Trip value, pre-fault and fault value will be recorded and reported. The input channel can still be used to trig the disturbance recorder.

If *OperationM = Enabled*, waveform (samples) will also be recorded and reported in graph.

Event recorder

Event recorder (ER) function has no dedicated parameters.

Trip value recorder

ZeroAngleRef: The parameter defines which analog signal that will be used as phase angle reference for all other analog input signals. This signal will also be used for frequency measurement and the measured frequency is used when calculating trip values. It is suggested to point out a sampled voltage input signal, for example, a line or busbar phase voltage (channel 1-30).

Sequential of events

function has no dedicated parameters.

Consideration

The density of recording equipment in power systems is increasing, since the number of modern IEDs, where recorders are included, is increasing. This leads to a vast number of recordings at every single disturbance and a lot of information has to be handled if the recording functions do not have proper settings. The goal is to optimize the settings in each IED to be able to capture just valuable disturbances and to maximize the number that is possible to save in the IED.

The recording time should not be longer than necessary (*PostFaultrecT* and *TimeLimit*).

- Should the function record faults only for the protected object or cover more?
- How long is the longest expected fault clearing time?
- Is it necessary to include reclosure in the recording or should a persistent fault generate a second recording (*PostRetrig*)?

Minimize the number of recordings:

- Binary signals: Use only relevant signals to start the recording that is, protection trip, carrier receive and/or pickup signals.
- Analog signals: The level triggering should be used with great care, since unfortunate settings will cause enormously number of recordings. If nevertheless analog input triggering is used, chose settings by a sufficient margin from normal operation values. Phase voltages are not recommended for trigging.

Remember that values of parameters set elsewhere are linked to the information on a report. Such parameters are, for example, station and object identifiers, CT and VT ratios.

3.15.7.3 Setting parameters

Table 238: DRPRDRE Non group settings (basic)

Name	Values (Range)	Unit	Step	Default	Description
Operation	Disabled Enabled	-	-	Disabled	Operation Enable/Disable
PreFaultRecT	0.05 - 9.90	s	0.01	0.10	Pre-fault recording time
PostFaultRecT	0.1 - 10.0	s	0.1	0.5	Post-fault recording time
TimeLimit	0.5 - 10.0	s	0.1	1.0	Fault recording time limit
PostRetrig	Disabled Enabled	-	-	Disabled	Post-fault retrig enabled (On) or not (Off)
ZeroAngleRef	1 - 30	Ch	1	1	Reference channel (voltage), phasors, frequency measurement
OpModeTest	Disabled Enabled	-	-	Disabled	Operation mode during test mode

Table 239: A1RADR Non group settings (basic)

Name	Values (Range)	Unit	Step	Default	Description
Operation01	Disabled Enabled	-	-	Disabled	Operation On/Off
NomValue01	0.0 - 999999.9	-	0.1	0.0	Nominal value for analog channel 1
UnderTrigOp01	Disabled Enabled	-	-	Disabled	Use under level trig for analog cha 1 (on) or not (off)
UnderTrigLe01	0 - 200	%	1	50	Under trigger level for analog cha 1 in % of signal
OverTrigOp01	Disabled Enabled	-	-	Disabled	Use over level trig for analog cha 1 (on) or not (off)
OverTrigLe01	0 - 5000	%	1	200	Over trigger level for analog cha 1 in % of signal
Operation02	Disabled Enabled	-	-	Disabled	Operation On/Off
NomValue02	0.0 - 999999.9	-	0.1	0.0	Nominal value for analog channel 2
UnderTrigOp02	Disabled Enabled	-	-	Disabled	Use under level trig for analog cha 2 (on) or not (off)
UnderTrigLe02	0 - 200	%	1	50	Under trigger level for analog cha 2 in % of signal
OverTrigOp02	Disabled Enabled	-	-	Disabled	Use over level trig for analog cha 2 (on) or not (off)
OverTrigLe02	0 - 5000	%	1	200	Over trigger level for analog cha 2 in % of signal

Table continues on next page

Name	Values (Range)	Unit	Step	Default	Description
Operation03	Disabled Enabled	-	-	Disabled	Operation On/Off
NomValue03	0.0 - 999999.9	-	0.1	0.0	Nominal value for analog channel 3
UnderTrigOp03	Disabled Enabled	-	-	Disabled	Use under level trig for analog cha 3 (on) or not (off)
UnderTrigLe03	0 - 200	%	1	50	Under trigger level for analog cha 3 in % of signal
OverTrigOp03	Disabled Enabled	-	-	Disabled	Use over level trig for analog cha 3 (on) or not (off)
OverTrigLe03	0 - 5000	%	1	200	Overtrigger level for analog cha 3 in % of signal
Operation04	Disabled Enabled	-	-	Disabled	Operation On/Off
NomValue04	0.0 - 999999.9	-	0.1	0.0	Nominal value for analog channel 4
UnderTrigOp04	Disabled Enabled	-	-	Disabled	Use under level trig for analog cha 4 (on) or not (off)
UnderTrigLe04	0 - 200	%	1	50	Under trigger level for analog cha 4 in % of signal
OverTrigOp04	Disabled Enabled	-	-	Disabled	Use over level trig for analog cha 4 (on) or not (off)
OverTrigLe04	0 - 5000	%	1	200	Over trigger level for analog cha 4 in % of signal
Operation05	Disabled Enabled	-	-	Disabled	Operation On/Off
NomValue05	0.0 - 999999.9	-	0.1	0.0	Nominal value for analog channel 5
UnderTrigOp05	Disabled Enabled	-	-	Disabled	Use under level trig for analog cha 5 (on) or not (off)
UnderTrigLe05	0 - 200	%	1	50	Under trigger level for analog cha 5 in % of signal
OverTrigOp05	Disabled Enabled	-	-	Disabled	Use over level trig for analog cha 5 (on) or not (off)
OverTrigLe05	0 - 5000	%	1	200	Over trigger level for analog cha 5 in % of signal
Operation06	Disabled Enabled	-	-	Disabled	Operation On/Off
NomValue06	0.0 - 999999.9	-	0.1	0.0	Nominal value for analog channel 6
UnderTrigOp06	Disabled Enabled	-	-	Disabled	Use under level trig for analog cha 6 (on) or not (off)
UnderTrigLe06	0 - 200	%	1	50	Under trigger level for analog cha 6 in % of signal
OverTrigOp06	Disabled Enabled	-	-	Disabled	Use over level trig for analog cha 6 (on) or not (off)
OverTrigLe06	0 - 5000	%	1	200	Over trigger level for analog cha 6 in % of signal
Operation07	Disabled Enabled	-	-	Disabled	Operation On/Off
NomValue07	0.0 - 999999.9	-	0.1	0.0	Nominal value for analog channel 7

Table continues on next page

Name	Values (Range)	Unit	Step	Default	Description
UnderTrigOp07	Disabled Enabled	-	-	Disabled	Use under level trig for analog cha 7 (on) or not (off)
UnderTrigLe07	0 - 200	%	1	50	Under trigger level for analog cha 7 in % of signal
OverTrigOp07	Disabled Enabled	-	-	Disabled	Use over level trig for analog cha 7 (on) or not (off)
OverTrigLe07	0 - 5000	%	1	200	Over trigger level for analog cha 7 in % of signal
Operation08	Disabled Enabled	-	-	Disabled	Operation On/Off
NomValue08	0.0 - 999999.9	-	0.1	0.0	Nominal value for analog channel 8
UnderTrigOp08	Disabled Enabled	-	-	Disabled	Use under level trig for analog cha 8 (on) or not (off)
UnderTrigLe08	0 - 200	%	1	50	Under trigger level for analog cha 8 in % of signal
OverTrigOp08	Disabled Enabled	-	-	Disabled	Use over level trig for analog cha 8 (on) or not (off)
OverTrigLe08	0 - 5000	%	1	200	Over trigger level for analog cha 8 in % of signal
Operation09	Disabled Enabled	-	-	Disabled	Operation On/Off
NomValue09	0.0 - 999999.9	-	0.1	0.0	Nominal value for analog channel 9
UnderTrigOp09	Disabled Enabled	-	-	Disabled	Use under level trig for analog cha 9 (on) or not (off)
UnderTrigLe09	0 - 200	%	1	50	Under trigger level for analog cha 9 in % of signal
OverTrigOp09	Disabled Enabled	-	-	Disabled	Use over level trig for analog cha 9 (on) or not (off)
OverTrigLe09	0 - 5000	%	1	200	Over trigger level for analog cha 9 in % of signal
Operation10	Disabled Enabled	-	-	Disabled	Operation On/Off
NomValue10	0.0 - 999999.9	-	0.1	0.0	Nominal value for analog channel 10
UnderTrigOp10	Disabled Enabled	-	-	Disabled	Use under level trig for analog cha 10 (on) or not (off)
UnderTrigLe10	0 - 200	%	1	50	Under trigger level for analog cha 10 in % of signal
OverTrigOp10	Disabled Enabled	-	-	Disabled	Use over level trig for analog cha 10 (on) or not (off)
OverTrigLe10	0 - 5000	%	1	200	Over trigger level for analog cha 10 in % of signal

Table 240: A4RADR Non group settings (basic)

Name	Values (Range)	Unit	Step	Default	Description
Operation31	Disabled Enabled	-	-	Disabled	Operation On/off
NomValue31	0.0 - 999999.9	-	0.1	0.0	Nominal value for analog channel 31
UnderTrigOp31	Disabled Enabled	-	-	Disabled	Use under level trig for analog cha 31 (on) or not (off)
UnderTrigLe31	0 - 200	%	1	50	Under trigger level for analog cha 31 in % of signal
OverTrigOp31	Disabled Enabled	-	-	Disabled	Use over level trig for analog cha 31 (on) or not (off)
OverTrigLe31	0 - 5000	%	1	200	Over trigger level for analog cha 31 in % of signal
Operation32	Disabled Enabled	-	-	Disabled	Operation On/off
NomValue32	0.0 - 999999.9	-	0.1	0.0	Nominal value for analog channel 32
UnderTrigOp32	Disabled Enabled	-	-	Disabled	Use under level trig for analog cha 32 (on) or not (off)
UnderTrigLe32	0 - 200	%	1	50	Under trigger level for analog cha 32 in % of signal
OverTrigOp32	Disabled Enabled	-	-	Disabled	Use over level trig for analog cha 32 (on) or not (off)
OverTrigLe32	0 - 5000	%	1	200	Over trigger level for analog cha 32 in % of signal
Operation33	Disabled Enabled	-	-	Disabled	Operation On/off
NomValue33	0.0 - 999999.9	-	0.1	0.0	Nominal value for analog channel 33
UnderTrigOp33	Disabled Enabled	-	-	Disabled	Use under level trig for analog cha 33 (on) or not (off)
UnderTrigLe33	0 - 200	%	1	50	Under trigger level for analog cha 33 in % of signal
OverTrigOp33	Disabled Enabled	-	-	Disabled	Use over level trig for analog cha 33 (on) or not (off)
OverTrigLe33	0 - 5000	%	1	200	Overtrigger level for analog cha 33 in % of signal
Operation34	Disabled Enabled	-	-	Disabled	Operation On/off
NomValue34	0.0 - 999999.9	-	0.1	0.0	Nominal value for analog channel 34
UnderTrigOp34	Disabled Enabled	-	-	Disabled	Use under level trig for analog cha 34 (on) or not (off)
UnderTrigLe34	0 - 200	%	1	50	Under trigger level for analog cha 34 in % of signal
OverTrigOp34	Disabled Enabled	-	-	Disabled	Use over level trig for analog cha 34 (on) or not (off)

Table continues on next page

Name	Values (Range)	Unit	Step	Default	Description
OverTrigLe34	0 - 5000	%	1	200	Over trigger level for analog cha 34 in % of signal
Operation35	Disabled Enabled	-	-	Disabled	Operation On/off
NomValue35	0.0 - 999999.9	-	0.1	0.0	Nominal value for analog channel 35
UnderTrigOp35	Disabled Enabled	-	-	Disabled	Use under level trig for analog cha 35 (on) or not (off)
UnderTrigLe35	0 - 200	%	1	50	Under trigger level for analog cha 35 in % of signal
OverTrigOp35	Disabled Enabled	-	-	Disabled	Use over level trig for analog cha 35 (on) or not (off)
OverTrigLe35	0 - 5000	%	1	200	Over trigger level for analog cha 35 in % of signal
Operation36	Disabled Enabled	-	-	Disabled	Operation On/off
NomValue36	0.0 - 999999.9	-	0.1	0.0	Nominal value for analog channel 36
UnderTrigOp36	Disabled Enabled	-	-	Disabled	Use under level trig for analog cha 36 (on) or not (off)
UnderTrigLe36	0 - 200	%	1	50	Under trigger level for analog cha 36 in % of signal
OverTrigOp36	Disabled Enabled	-	-	Disabled	Use over level trig for analog cha 36 (on) or not (off)
OverTrigLe36	0 - 5000	%	1	200	Over trigger level for analog cha 36 in % of signal
Operation37	Disabled Enabled	-	-	Disabled	Operation On/off
NomValue37	0.0 - 999999.9	-	0.1	0.0	Nominal value for analog channel 37
UnderTrigOp37	Disabled Enabled	-	-	Disabled	Use under level trig for analog cha 37 (on) or not (off)
UnderTrigLe37	0 - 200	%	1	50	Under trigger level for analog cha 37 in % of signal
OverTrigOp37	Disabled Enabled	-	-	Disabled	Use over level trig for analog cha 37 (on) or not (off)
OverTrigLe37	0 - 5000	%	1	200	Over trigger level for analog cha 37 in % of signal
Operation38	Disabled Enabled	-	-	Disabled	Operation On/off
NomValue38	0.0 - 999999.9	-	0.1	0.0	Nominal value for analog channel 38
UnderTrigOp38	Disabled Enabled	-	-	Disabled	Use under level trig for analog cha 38 (on) or not (off)
UnderTrigLe38	0 - 200	%	1	50	Under trigger level for analog cha 38 in % of signal
OverTrigOp38	Disabled Enabled	-	-	Disabled	Use over level trig for analog cha 38 (on) or not (off)

Table continues on next page

Name	Values (Range)	Unit	Step	Default	Description
OverTrigLe38	0 - 5000	%	1	200	Over trigger level for analog cha 38 in % of signal
Operation39	Disabled Enabled	-	-	Disabled	Operation On/off
NomValue39	0.0 - 999999.9	-	0.1	0.0	Nominal value for analog channel 39
UnderTrigOp39	Disabled Enabled	-	-	Disabled	Use under level trig for analog cha 39 (on) or not (off)
UnderTrigLe39	0 - 200	%	1	50	Under trigger level for analog cha 39 in % of signal
OverTrigOp39	Disabled Enabled	-	-	Disabled	Use over level trig for analog cha 39 (on) or not (off)
OverTrigLe39	0 - 5000	%	1	200	Over trigger level for analog cha 39 in % of signal
Operation40	Disabled Enabled	-	-	Disabled	Operation On/off
NomValue40	0.0 - 999999.9	-	0.1	0.0	Nominal value for analog channel 40
UnderTrigOp40	Disabled Enabled	-	-	Disabled	Use under level trig for analog cha 40 (on) or not (off)
UnderTrigLe40	0 - 200	%	1	50	Under trigger level for analog cha 40 in % of signal
OverTrigOp40	Disabled Enabled	-	-	Disabled	Use over level trig for analog cha 40 (on) or not (off)
OverTrigLe40	0 - 5000	%	1	200	Over trigger level for analog cha 40 in % of signal

Table 241: B1RBDR Non group settings (basic)

Name	Values (Range)	Unit	Step	Default	Description
Operation01	Disabled Enabled	-	-	Disabled	Trigger operation On/Off
TrigLevel01	Trig on 0 Trig on 1	-	-	Trig on 1	Trig on positiv (1) or negative (0) slope for binary inp 1
IndicationMa01	Hide Show	-	-	Hide	Indication mask for binary channel 1
SetLED01	Disabled Enabled	-	-	Disabled	Set red-LED on HMI for binary channel 1
Operation02	Disabled Enabled	-	-	Disabled	Trigger operation On/Off
TrigLevel02	Trig on 0 Trig on 1	-	-	Trig on 1	Trig on positiv (1) or negative (0) slope for binary inp 2
IndicationMa02	Hide Show	-	-	Hide	Indication mask for binary channel 2
SetLED02	Disabled Enabled	-	-	Disabled	Set red-LED on HMI for binary channel 2

Table continues on next page

Name	Values (Range)	Unit	Step	Default	Description
Operation03	Disabled Enabled	-	-	Disabled	Trigger operation On/Off
TrigLevel03	Trig on 0 Trig on 1	-	-	Trig on 1	Trig on positiv (1) or negative (0) slope for binary inp 3
IndicationMa03	Hide Show	-	-	Hide	Indication mask for binary channel 3
SetLED03	Disabled Enabled	-	-	Disabled	Set red-LED on HMI for binary channel 3
Operation04	Disabled Enabled	-	-	Disabled	Trigger operation On/Off
TrigLevel04	Trig on 0 Trig on 1	-	-	Trig on 1	Trig on positiv (1) or negative (0) slope for binary inp 4
IndicationMa04	Hide Show	-	-	Hide	Indication mask for binary channel 4
SetLED04	Disabled Enabled	-	-	Disabled	Set red-LED on HMI for binary channel 4
Operation05	Disabled Enabled	-	-	Disabled	Trigger operation On/Off
TrigLevel05	Trig on 0 Trig on 1	-	-	Trig on 1	Trig on positiv (1) or negative (0) slope for binary inp 5
IndicationMa05	Hide Show	-	-	Hide	Indication mask for binary channel 5
SetLED05	Disabled Enabled	-	-	Disabled	Set red-LED on HMI for binary channel 5
Operation06	Disabled Enabled	-	-	Disabled	Trigger operation On/Off
TrigLevel06	Trig on 0 Trig on 1	-	-	Trig on 1	Trig on positiv (1) or negative (0) slope for binary inp 6
IndicationMa06	Hide Show	-	-	Hide	Indication mask for binary channel 6
SetLED06	Disabled Enabled	-	-	Disabled	Set red-LED on HMI for binary channel 6
Operation07	Disabled Enabled	-	-	Disabled	Trigger operation On/Off
TrigLevel07	Trig on 0 Trig on 1	-	-	Trig on 1	Trig on positiv (1) or negative (0) slope for binary inp 7
IndicationMa07	Hide Show	-	-	Hide	Indication mask for binary channel 7
SetLED07	Disabled Enabled	-	-	Disabled	Set red-LED on HMI for binary channel 7
Operation08	Disabled Enabled	-	-	Disabled	Trigger operation On/Off
TrigLevel08	Trig on 0 Trig on 1	-	-	Trig on 1	Trig on positiv (1) or negative (0) slope for binary inp 8

Table continues on next page

Name	Values (Range)	Unit	Step	Default	Description
IndicationMa08	Hide Show	-	-	Hide	Indication mask for binary channel 8
SetLED08	Disabled Enabled	-	-	Disabled	Set red-LED on HMI for binary channel 8
Operation09	Disabled Enabled	-	-	Disabled	Trigger operation On/Off
TrigLevel09	Trig on 0 Trig on 1	-	-	Trig on 1	Trig on positiv (1) or negative (0) slope for binary inp 9
IndicationMa09	Hide Show	-	-	Hide	Indication mask for binary channel 9
SetLED09	Disabled Enabled	-	-	Disabled	Set red-LED on HMI for binary channel 9
Operation10	Disabled Enabled	-	-	Disabled	Trigger operation On/Off
TrigLevel10	Trig on 0 Trig on 1	-	-	Trig on 1	Trig on positiv (1) or negative (0) slope for binary inp 10
IndicationMa10	Hide Show	-	-	Hide	Indication mask for binary channel 10
SetLED10	Disabled Enabled	-	-	Disabled	Set red-LED on HMI for binary channel 10
Operation11	Disabled Enabled	-	-	Disabled	Trigger operation On/Off
TrigLevel11	Trig on 0 Trig on 1	-	-	Trig on 1	Trig on positiv (1) or negative (0) slope for binary inp 11
IndicationMa11	Hide Show	-	-	Hide	Indication mask for binary channel 11
SetLED11	Disabled Enabled	-	-	Disabled	Set red-LED on HMI for binary channel 11
Operation12	Disabled Enabled	-	-	Disabled	Trigger operation On/Off
TrigLevel12	Trig on 0 Trig on 1	-	-	Trig on 1	Trig on positiv (1) or negative (0) slope for binary inp 12
IndicationMa12	Hide Show	-	-	Hide	Indication mask for binary channel 12
SetLED12	Disabled Enabled	-	-	Disabled	Set red-LED on HMI for binary input 12
Operation13	Disabled Enabled	-	-	Disabled	Trigger operation On/Off
TrigLevel13	Trig on 0 Trig on 1	-	-	Trig on 1	Trig on positiv (1) or negative (0) slope for binary inp 13
IndicationMa13	Hide Show	-	-	Hide	Indication mask for binary channel 13
SetLED13	Disabled Enabled	-	-	Disabled	Set red-LED on HMI for binary channel 13

Table continues on next page

Name	Values (Range)	Unit	Step	Default	Description
Operation14	Disabled Enabled	-	-	Disabled	Trigger operation On/Off
TrigLevel14	Trig on 0 Trig on 1	-	-	Trig on 1	Trig on positiv (1) or negative (0) slope for binary inp 14
IndicationMa14	Hide Show	-	-	Hide	Indication mask for binary channel 14
SetLED14	Disabled Enabled	-	-	Disabled	Set red-LED on HMI for binary channel 14
Operation15	Disabled Enabled	-	-	Disabled	Trigger operation On/Off
TrigLevel15	Trig on 0 Trig on 1	-	-	Trig on 1	Trig on positiv (1) or negative (0) slope for binary inp 15
IndicationMa15	Hide Show	-	-	Hide	Indication mask for binary channel 15
SetLED15	Disabled Enabled	-	-	Disabled	Set red-LED on HMI for binary channel 15
Operation16	Disabled Enabled	-	-	Disabled	Trigger operation On/Off
TrigLevel16	Trig on 0 Trig on 1	-	-	Trig on 1	Trig on positiv (1) or negative (0) slope for binary inp 16
IndicationMa16	Hide Show	-	-	Hide	Indication mask for binary channel 16
SetLED16	Disabled Enabled	-	-	Disabled	Set red-LED on HMI for binary channel 16
FUNT1	0 - 255	FunT	1	0	Function type for binary channel 1 (IEC -60870-5-103)
FUNT2	0 - 255	FunT	1	0	Function type for binary channel 2 (IEC -60870-5-103)
FUNT3	0 - 255	FunT	1	0	Function type for binary channel 3 (IEC -60870-5-103)
FUNT4	0 - 255	FunT	1	0	Function type for binary channel 4 (IEC -60870-5-103)
FUNT5	0 - 255	FunT	1	0	Function type for binary channel 5 (IEC -60870-5-103)
FUNT6	0 - 255	FunT	1	0	Function type for binary channel 6 (IEC -60870-5-103)
FUNT7	0 - 255	FunT	1	0	Function type for binary channel 7 (IEC -60870-5-103)
FUNT8	0 - 255	FunT	1	0	Function type for binary channel 8 (IEC -60870-5-103)
FUNT9	0 - 255	FunT	1	0	Function type for binary channel 9 (IEC -60870-5-103)
FUNT10	0 - 255	FunT	1	0	Function type for binary channel 10 (IEC -60870-5-103)

Table continues on next page

Name	Values (Range)	Unit	Step	Default	Description
FUNT11	0 - 255	FunT	1	0	Function type for binary channel 11 (IEC -60870-5-103)
FUNT12	0 - 255	FunT	1	0	Function type for binary channel 12 (IEC -60870-5-103)
FUNT13	0 - 255	FunT	1	0	Function type for binary channel 13 (IEC -60870-5-103)
FUNT14	0 - 255	FunT	1	0	Function type for binary channel 14 (IEC -60870-5-103)
FUNT15	0 - 255	FunT	1	0	Function type for binary channel 15 (IEC -60870-5-103)
FUNT16	0 - 255	FunT	1	0	Function type for binary channel 16 (IEC -60870-5-103)
INFNO1	0 - 255	InfNo	1	0	Information number for binary channel 1 (IEC -60870-5-103)
INFNO2	0 - 255	InfNo	1	0	Information number for binary channel 2 (IEC -60870-5-103)
INFNO3	0 - 255	InfNo	1	0	Information number for binary channel 3 (IEC -60870-5-103)
INFNO4	0 - 255	InfNo	1	0	Information number for binary channel 4 (IEC -60870-5-103)
INFNO5	0 - 255	InfNo	1	0	Information number for binary channel 5 (IEC -60870-5-103)
INFNO6	0 - 255	InfNo	1	0	Information number for binary channel 6 (IEC -60870-5-103)
INFNO7	0 - 255	InfNo	1	0	Information number for binary channel 7 (IEC -60870-5-103)
INFNO8	0 - 255	InfNo	1	0	Information number for binary channel 8 (IEC -60870-5-103)
INFNO9	0 - 255	InfNo	1	0	Information number for binary channel 9 (IEC -60870-5-103)
INFNO10	0 - 255	InfNo	1	0	Information number for binary channel 10 (IEC -60870-5-103)
INFNO11	0 - 255	InfNo	1	0	Information number for binary channel 11 (IEC -60870-5-103)
INFNO12	0 - 255	InfNo	1	0	Information number for binary channel 12 (IEC -60870-5-103)
INFNO13	0 - 255	InfNo	1	0	Information number for binary channel 13 (IEC -60870-5-103)
INFNO14	0 - 255	InfNo	1	0	Information number for binary channel 14 (IEC -60870-5-103)
INFNO15	0 - 255	InfNo	1	0	Information number for binary channel 15 (IEC -60870-5-103)
INFNO16	0 - 255	InfNo	1	0	Information number for binary channel 16 (IEC -60870-5-103)

3.15.8 Sequential of events

3.15.8.1 Application

From an overview perspective, continuous event-logging is a useful system monitoring instrument and is a complement to specific disturbance recorder functions.

The event list (EL), always included in the IED, logs all selected binary input signals connected to the Disturbance report function. The list may contain of up to 1000 time-tagged events stored in a ring-buffer where, if the buffer is full, the oldest event is overwritten when a new event is logged.

The difference between the event list (EL) and the event recorder (ER) function is that the list function continuously updates the log with time tagged events while the recorder function is an extract of events during the disturbance report time window.

The event list information is available in the IED via the local HMI or PCM600.

3.15.8.2 Setting guidelines

The setting parameters for the Event list function (EL) are a part of the Disturbance report settings.

It is possible to event handle up to 96 binary signals, either internal signals or signals from binary input channels. These signals are identical with the binary signals recorded by the disturbance recorder.

There is no dedicated setting for the EL function.

3.15.9 Indications

3.15.9.1 Application

Fast, condensed and reliable information about disturbances in the primary and/or in the secondary system is important. Binary signals that have changed status during a disturbance are an example of this. This information is used primarily in the short term (for example, immediate disturbance analysis, corrective actions) to get information via the local HMI in a straightforward way without any knowledge of how to handle the IED.

There are three LEDs on the local HMI (green, yellow and red), which will display status information about the IED (in service, internal failure, and so on) and the Disturbance report function (trigged).

The Indication function (IND), always included in the IED, shows all selected binary input signals connected to the Disturbance Report function that have been activated

during a disturbance. The status changes are logged during the entire recording time, which depends on the set of recording times (pre-, post-fault and limit time) and the actual fault time. The indications are not time-tagged.

The indication information is available for each of the recorded disturbances in the IED and the user may use the local HMI to view the information.

3.15.9.2 Setting guidelines

The setting parameters for LEDs and the Indication function (IND) are a part of the disturbance report settings.

Available signals are identical with the binary signals recorded by the disturbance report. It is possible to use all binary input signals for the Indication function on the local HMI, but it is not recommended since the general view will be lost. The intention is to point out some important signals, not to many, to be shown. If a more thorough analysis is to be done information from the event recorder should be used.

To be able to control the red LED in the local HMI:

SetLEDn: Set red LED on LMHI in front of the IED if binary input N changes status.

For the IND function there are a number dedicated settings:

IndicationMaN: Indication mask for binary input N. If set (*Show*), a status change of that particular input, will be fetched and shown on the local HMI. If not set (*Hide*), status change will not be indicated.

3.15.10 Event recorder

3.15.10.1 Application

Quick, complete and reliable information about disturbances in the primary and/or in the secondary system is vital, for example, time tagged events logged during disturbances. This information is used for different purposes in the short term, for example, disturbance analysis, corrective actions and in the long term, for example, disturbance analysis, statistics and maintenance, that is Functional Analysis).

The event recorder, always included in the IED, logs all selected binary input signals connected to the disturbance report function DRPRDRE. Each recording can contain up to 150 time-tagged events. The events are logged during the total recording time, which depends on the set of recording times (pre-, post-fault and limit time) and the actual fault time. During this time, the first 150 events for all 96 binary signals are logged and time-tagged.

The event recorder information is available for each of the recorded disturbances in the IED and the user may use the local HMI to get the information. The information is included in the disturbance recorder file, which may be uploaded to PCM600 and further analyzed using the Disturbance Handling tool.

The event recording information is an integrated part of the disturbance record (Comtrade file).

3.15.10.2 Setting guidelines

The setting parameters for the Event Recorder (ER) function are a part of the Disturbance Report settings.

It is possible to event handle up to 96 binary signals, either internal signals or signals from binary input channels. These signals are identical to the binary signals recorded by the disturbance report.

For the ER function there is no dedicated setting.

3.15.11 Trip value recorder

3.15.11.1 Application

Fast, complete and reliable information about disturbances such as fault currents and voltage faults in the power system is vital. This information is used for different purposes in the short perspective (for example, fault location, disturbance analysis, corrective actions) and the long term (for example, disturbance analysis, statistics and maintenance, that is Functional Analysis).

The trip value recorder (TVR), always included in the IED, calculates the values of all selected external analog input signals (channel 1-30) connected to the Disturbance Report function. The estimation is performed immediately after finalizing each recording and available in the disturbance report. The result is magnitude and phase angle before and during the fault for each analog input signal.

The information is used as input to the fault location function (FL), if included in the IED and in operation.

The trip value recorder (TVR) information is available for each of the recorded disturbances in the IED and the user may use the local HMI to get the information. The information is included in the disturbance recorder file, which can be uploaded to PCM600 and further analyzed using the Disturbance Handling tool.

3.15.11.2 Setting guidelines

The trip value recorder (TVR) setting parameters are a part of the disturbance report settings.

For the trip value recorder (TVR) there is one dedicated setting:

ZeroAngleRef: The parameter defines which analog signal to use as phase-angle reference for all other input signals. It is suggested to point out a sampled voltage input signal, for example a line or busbar phase voltage (channel 1-30).

3.15.12 Disturbance recorder

3.15.12.1 Application

The maximum number of recordings depend on each recordings total recording time. Long recording time will reduce the number of recordings to less than 100.

The IED flash disk should NOT be used to store any user files. This might cause disturbance recordings to be deleted due to lack of disk space.

To get fast, complete and reliable information about fault current, voltage, binary signal and other disturbances in the power system is very important. This is accomplished by the Disturbance Recorder function and facilitates a better understanding of the behavior of the power system and related primary and secondary equipment during and after a disturbance. An analysis of the recorded data provides valuable information that can be used to explain a disturbance, basis for change of IED setting plan, improvement of existing equipment, and so on. This information can also be used in a longer perspective when planning for and designing new installations, that is a disturbance recording could be a part of Functional Analysis (FA).

The Disturbance Recorder (DR), always included in the IED, acquires sampled data from all selected analog input and binary signals connected to the function blocks, that is maximum 30 external analog, 10 internal (derived) analog and 96 binary signals.

The function is characterized by great flexibility as far as configuration, starting conditions, recording times, and large storage capacity are concerned. Thus, the disturbance recorder is not dependent on the operation of protective functions, and it can record disturbances that were not discovered by protective functions.

The disturbance recorder information is saved for each of the recorded disturbances in the IED and the user may use the local HMI to get some general information about the

recordings. The disturbance recording information is included in the disturbance recorder files, which may be uploaded to PCM600 for further analysis using the Disturbance Handling tool. The information is also available on a station bus according to IEC 61850 and according to IEC 60870-5-103.

3.15.12.2 Setting guidelines

The setting parameters for the Disturbance Recorder function (DR) is a part of the Disturbance Report settings.

It is possible to handle up to 40 analog and 96 binary signals, either internal signals or signals coming from external inputs. The binary signals are identical with the signals recorded by the other functions in the Disturbance Report function, that is Event recorder (ER), Indication (IND) and Trip value recorder (TVR) function.

For the DR function there is one dedicated setting:

OperationM: Analog channel M is to be recorded by the disturbance recorder (*On*) or not (*Off*). Other disturbance report settings, such as *Operation* and *TrigLevel* for binary signals, will also influence the disturbance recorder.

3.16 Metering

3.16.1 Pulse-counter logic PCGGIO

Function description	IEC 61850 identification	IEC 60617 identification	ANSI/IEEE C37.2 device number
Pulse-counter logic	PCGGIO	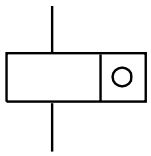	-

3.16.1.1 Application

Pulse counter logic function counts externally generated binary pulses, for instance pulses coming from an external energy meter, for calculation of energy consumption values. The pulses are captured by the binary input module (BIM), and read by the pulse counter function. The number of pulses in the counter is then reported via the station bus to the substation automation system or read via the station monitoring

system as a service value. When using IEC 61850–8–1, a scaled service value is available over the station bus.

The normal use for this function is the counting of energy pulses from external energy meters. An optional number of inputs from an arbitrary input module in IED can be used for this purpose with a frequency of up to 40 Hz. The pulse counter can also be used as a general purpose counter.

3.16.1.2 Setting guidelines

From PCM600, these parameters can be set individually for each pulse counter:

- *Operation*: *Disabled*/*Enabled*
- *tReporting*: *0-3600s*
- *EventMask*: *NoEvents*/*ReportEvents*

The configuration of the inputs and outputs of the Pulse counter function block is made with PCM600.

On the Binary Input Module, the debounce filter time is fixed set to 5 ms, that is, the counter suppresses pulses with a pulse length less than 5 ms. The input oscillation blocking frequency is preset to 40 Hz. That means that the counter finds the input oscillating if the input frequency is greater than 40 Hz. The oscillation suppression is released at 30 Hz. The values for blocking/release of the oscillation can be changed in the local HMI and PCM600 under **Main menu/Settings/General settings/I/O-modules**

The setting is common for all input channels on a Binary Input Module, that is, if changes of the limits are made for inputs not connected to the pulse counter, the setting also influences the inputs on the same board used for pulse counting.

3.16.1.3 Setting parameters

Table 242: PCGGIO Non group settings (basic)

Name	Values (Range)	Unit	Step	Default	Description
Operation	Disabled Enabled	-	-	Disabled	Operation Enable/Disable
EventMask	NoEvents ReportEvents	-	-	NoEvents	Report mask for analog events from pulse counter
CountCriteria	Disabled RisingEdge Falling edge OnChange	-	-	RisingEdge	Pulse counter criteria

Table continues on next page

Name	Values (Range)	Unit	Step	Default	Description
Scale	1.000 - 90000.000	-	0.001	1.000	Scaling value for SCAL_VAL output to unit per counted value
Quantity	Count ActivePower ApparentPower ReactivePower ActiveEnergy ApparentEnergy ReactiveEnergy	-	-	Count	Measured quantity for SCAL_VAL output
tReporting	0 - 3600	s	1	60	Cycle time for reporting of counter value

3.16.2 Function for energy calculation and demand handling ETPMMTR

Function description	IEC 61850 identification	IEC 60617 identification	ANSI/IEEE C37.2 device number
Energy calculation and demand handling	ETPMMTR		-

3.16.2.1 Application

Energy calculation and demand handling function ETPMMTR is intended for statistics of the forward and reverse active and reactive energy. It has a high accuracy basically given by the measurements function (CVMMXN). This function has a site calibration possibility to further increase the total accuracy.

The function is connected to the instantaneous outputs of (CVMMXN) as shown in figure 323.

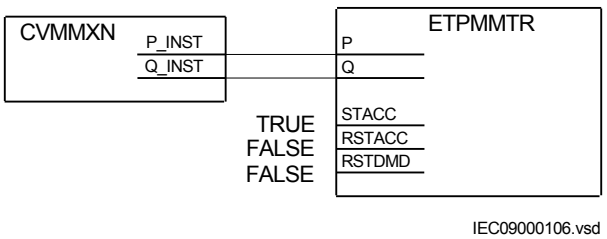

Figure 323: Connection of energy calculation and demand handling function ETPMMTR to the measurements function (CVMMXN)

The energy values can be read through communication in MWh and MVarh in monitoring tool of PCM600 and/or alternatively the values can be presented on the local HMI. The local HMI graphical display is configured with PCM600 Graphical

display editor tool (GDE) with a measuring value which is selected to the active and reactive component as preferred. All four values can also be presented.

Maximum demand values are presented in MWh or MVarh in the same way.

Alternatively, the values can be presented with use of the pulse counters function (PCGGIO). The output values are scaled with the pulse output setting values *EAFAccPlsQty*, *EARAccPlsQty*, *ERFAccPlsQty* and *ERVAccPlsQty* of the energy metering function and then the pulse counter can be set-up to present the correct values by scaling in this function. Pulse counter values can then be presented on the local HMI in the same way and/or sent to the SA system through communication where the total energy then is calculated by summation of the energy pulses. This principle is good for very high values of energy as the saturation of numbers else will limit energy integration to about one year with 50 kV and 3000 A. After that the accumulation will start on zero again.

3.16.2.2 Setting guidelines

The parameters are set via the local HMI or PCM600.

The following settings can be done for the energy calculation and demand handling function ETPMMTR:

Operation: *Disabled*/*Enabled*

tEnergy: Time interval when energy is measured.

StartAcc: *Disabled*/*Enabled* is used to switch the accumulation of energy on and off.

The input signal STACC is used to start accumulation. Input signal STACC cannot be used to halt accumulation. The energy content is reset every time STACC is activated. STACC can for example, be used when an external clock is used to switch two active energy measuring function blocks on and off to have indication of two tariffs.

tEnergyOnPls: gives the pulse length ON time of the pulse. It should be at least *100* ms when connected to the Pulse counter function block. Typical value can be *100* ms.

tEnergyOffPls: gives the OFF time between pulses. Typical value can be *100* ms.

EAFAccPlsQty and *EARAccPlsQty*: gives the MWh value in each pulse. It should be selected together with the setting of the Pulse counter (PCGGIO) settings to give the correct total pulse value.

ERFAccPlsQty and *ERVAccPlsQty* : gives the MVarh value in each pulse. It should be selected together with the setting of the Pulse counter (PCGGIO) settings to give the correct total pulse value.

For the advanced user there are a number of settings for direction, zero clamping, max limit, and so on. Normally, the default values are suitable for these parameters.

3.16.2.3 Setting parameters

Table 243: ETPMMTR Non group settings (basic)

Name	Values (Range)	Unit	Step	Default	Description
Operation	Disabled Enabled	-	-	Disabled	Operation Enable/Disable
StartAcc	Disabled Enabled	-	-	Disabled	Activate the accumulation of energy values
tEnergy	1 Minute 5 Minutes 10 Minutes 15 Minutes 30 Minutes 60 Minutes 180 Minutes	-	-	1 Minute	Time interval for energy calculation
tEnergyOnPls	0.000 - 60.000	s	0.001	1.000	Energy accumulated pulse ON time in secs
tEnergyOffPls	0.000 - 60.000	s	0.001	0.500	Energy accumulated pulse OFF time in secs
EAFAccPlsQty	0.001 - 10000.000	MWh	0.001	100.000	Pulse quantity for active forward accumulated energy value
EARAccPlsQty	0.001 - 10000.000	MWh	0.001	100.000	Pulse quantity for active reverse accumulated energy value
ERFAccPlsQty	0.001 - 10000.000	MVArh	0.001	100.000	Pulse quantity for reactive forward accumulated energy value
ERVAccPlsQty	0.001 - 10000.000	MVArh	0.001	100.000	Pulse quantity for reactive reverse accumulated energy value

Table 244: ETPMMTR Non group settings (advanced)

Name	Values (Range)	Unit	Step	Default	Description
EALim	0.001 - 10000000000.000	MWh	0.001	1000000.000	Active energy limit
ERLim	0.001 - 10000000000.000	MVArh	0.001	1000.000	Reactive energy limit
DirEnergyAct	Forward Reverse	-	-	Forward	Direction of active energy flow Forward/ Reverse
DirEnergyReac	Forward Reverse	-	-	Forward	Direction of reactive energy flow Forward/ Reverse
EnZeroClamp	Disabled Enabled	-	-	Enabled	Enable of zero point clamping detection function

Table continues on next page

Name	Values (Range)	Unit	Step	Default	Description
LevZeroClampP	0.001 - 10000.000	MW	0.001	10.000	Zero point clamping level at active Power
LevZeroClampQ	0.001 - 10000.000	MVAr	0.001	10.000	Zero point clamping level at reactive Power
EAFPrestVal	0.000 - 10000.000	MWh	0.001	0.000	Preset Initial value for forward active energy
EARPrestVal	0.000 - 10000.000	MWh	0.001	0.000	Preset Initial value for reverse active energy
ERFPresetVal	0.000 - 10000.000	MVArh	0.001	0.000	Preset Initial value for forward reactive energy
ERVPresetVal	0.000 - 10000.000	MVArh	0.001	0.000	Preset Initial value for reverse reactive energy

Section 4 Station communication

About this chapter

This chapter describes the communication possibilities in a SA-system.

4.1 Overview

Each IED is provided with a communication interface, enabling it to connect to one or many substation level systems or equipment, either on the Substation Automation (SA) bus or Substation Monitoring (SM) bus.

Following communication protocols are available:

- IEC 61850-8-1 communication protocol
- IEC 61850-9-2LE communication protocol
- LON communication protocol
- SPA or IEC 60870-5-103 communication protocol
- DNP3.0 communication protocol

Theoretically, several protocols can be combined in the same IED.

4.2 IEC 61850-8-1 communication protocol

4.2.1 Application IEC 61850-8-1

IEC 61850-8-1 communication protocol allows vertical communication to HSI clients and allows horizontal communication between two or more intelligent electronic devices (IEDs) from one or several vendors to exchange information and to use it in the performance of their functions and for correct co-operation.

GOOSE (Generic Object Oriented Substation Event), which is a part of IEC 61850–8–1 standard, allows the IEDs to communicate state and control information amongst themselves, using a publish-subscribe mechanism. That is, upon detecting an event, the IED(s) use a multi-cast transmission to notify those devices that have registered to receive the data. An IED can, by publishing a GOOSE message, report its status. It can also request a control action to be directed at any device in the network.

Figure 324 shows the topology of an IEC 61850–8–1 configuration. IEC 61850–8–1 specifies only the interface to the substation LAN. The LAN itself is left to the system integrator.

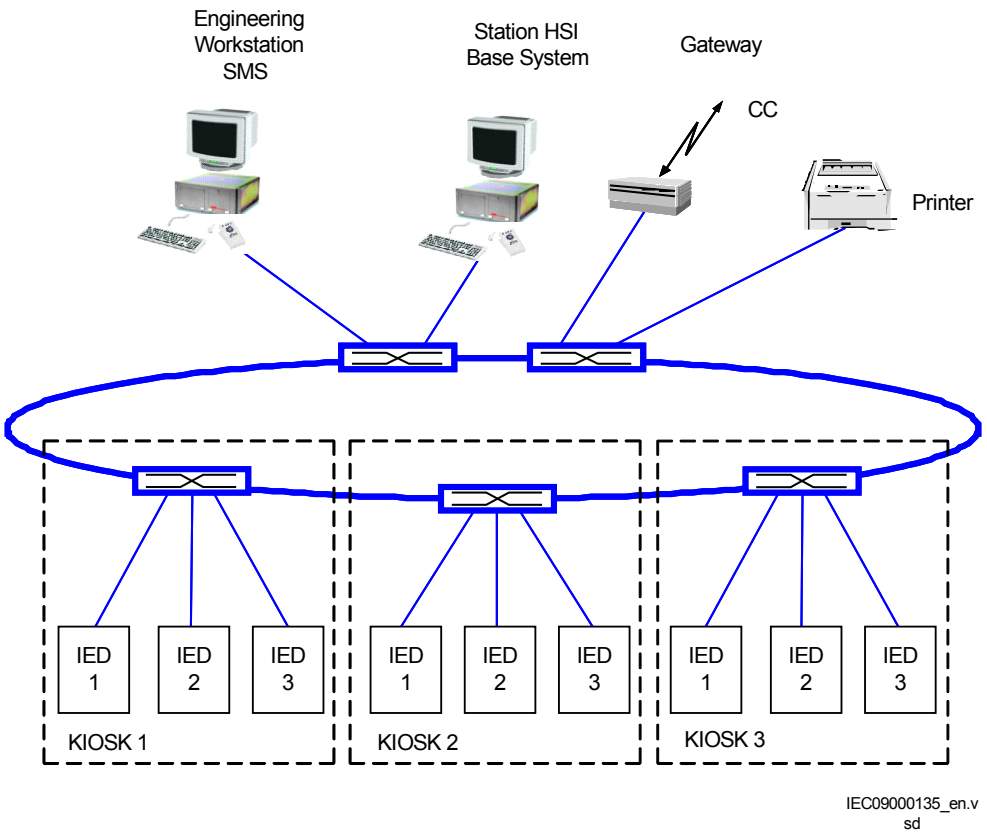

Figure 324: SA system with IEC 61850–8–1

Figure 325 shows the GOOSE peer-to-peer communication.

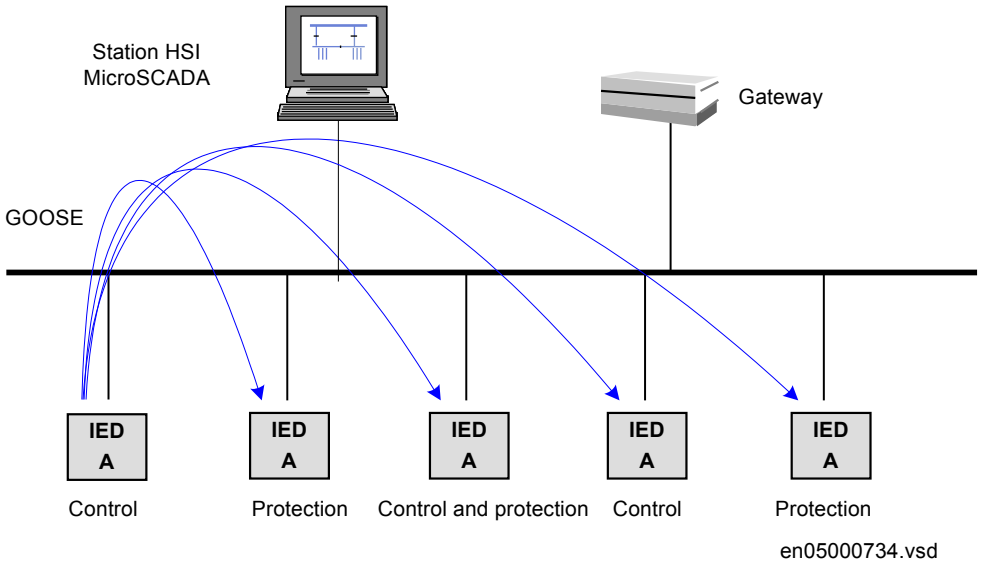

Figure 325: Example of a broadcasted GOOSE message

4.2.2 Setting guidelines

There are two settings related to the IEC 61850–8–1 protocol:

Operation User can set IEC 61850 communication to *Enabled* or *Disabled*.

GOOSE has to be set to the Ethernet link where GOOSE traffic shall be send and received.

4.2.3 Setting parameters

Table 245: IEC61850-8-1 Non group settings (basic)

Name	Values (Range)	Unit	Step	Default	Description
Operation	Off On	-	-	Off	Operation Off/On
GOOSE	Front OEM311_AB OEM311_CD	-	-	OEM311_AB	Port for GOOSE communication

Table 246: GOOSEBINRCV Non group settings (basic)

Name	Values (Range)	Unit	Step	Default	Description
Operation	Disabled Enabled	-	-	Disabled	Operation Disabled/Enabled

4.2.4 IEC 61850 generic communication I/O functions SPGGIO, SP16GGIO

4.2.4.1 Application

IEC 61850–8–1 generic communication I/O functions (SPGGIO) function is used to send one single logical output to other systems or equipment in the substation. It has one visible input, that should be connected in ACT tool.

4.2.4.2 Setting guidelines

There are no settings available for the user for SPGGIO. However, PCM600 must be used to get the signals sent by SPGGIO.

4.2.4.3 Setting parameters

The function does not have any parameters available in the local HMI or PCM600.

4.2.5 IEC 61850 generic communication I/O functions MVGGIO

4.2.5.1 Application

IEC61850 generic communication I/O functions (MVGGIO) function is used to send the instantaneous value of an analog signal to other systems or equipment in the substation. It can also be used inside the same IED, to attach a RANGE aspect to an analog value and to permit measurement supervision on that value.

4.2.5.2 Setting guidelines

The settings available for IEC61850 generic communication I/O functions (MVGGIO) function allows the user to choose a deadband and a zero deadband for the monitored signal. Values within the zero deadband are considered as zero.

The high and low limit settings provides limits for the high-high-, high, normal, low and low-low ranges of the measured value. The actual range of the measured value is shown on the range output of MVGGIO function block. When a Measured value expander block (RANGE_XP) is connected to the range output, the logical outputs of the RANGE_XP are changed accordingly.

4.2.5.3 Setting parameters

Table 247: MVGGIO Non group settings (basic)

Name	Values (Range)	Unit	Step	Default	Description
MV db	1 - 300	Type	1	10	Cycl: Report interval (s), Db: In % of range, Int Db: In %s
MV zeroDb	0 - 100000	m%	1	500	Zero point clamping in 0.001% of range
MV hhLim	-10000000000.000 - 10000000000.000	-	0.001	90.000	High High limit
MV hLim	-10000000000.000 - 10000000000.000	-	0.001	80.000	High limit
MV lLim	-10000000000.000 - 10000000000.000	-	0.001	-80.000	Low limit
MV llLim	-10000000000.000 - 10000000000.000	-	0.001	-90.000	Low Low limit
MV min	-10000000000.000 - 10000000000.000	-	0.001	-100.000	Minimum value
MV max	-10000000000.000 - 10000000000.000	-	0.001	100.000	Maximum value
MV dbType	Cyclic Dead band Int deadband	-	-	Dead band	Reporting type
MV limHys	0.000 - 100.000	%	0.001	5.000	Hysteresis value in % of range (common for all limits)

4.2.6 IEC 61850-8-1 redundant station bus communication

Function description	IEC 61850 identification	IEC 60617 identification	ANSI/IEEE C37.2 device number
Parallel Redundancy Protocol Status	PRPSTATUS	-	-
Duo driver configuration	DUODRV	-	-

4.2.6.1 Application

Parallel redundancy protocol status (PRPSTATUS) together with Duo driver configuration (DUODRV) are used to supervise and assure redundant Ethernet communication over two channels. This will secure data transfer even though one communication channel might not be available for some reason. Together PRPSTATUS and DUODRV provide redundant communication over station bus running IEC 61850-8-1 protocol. The redundant communication use both port AB and CD on OEM module.

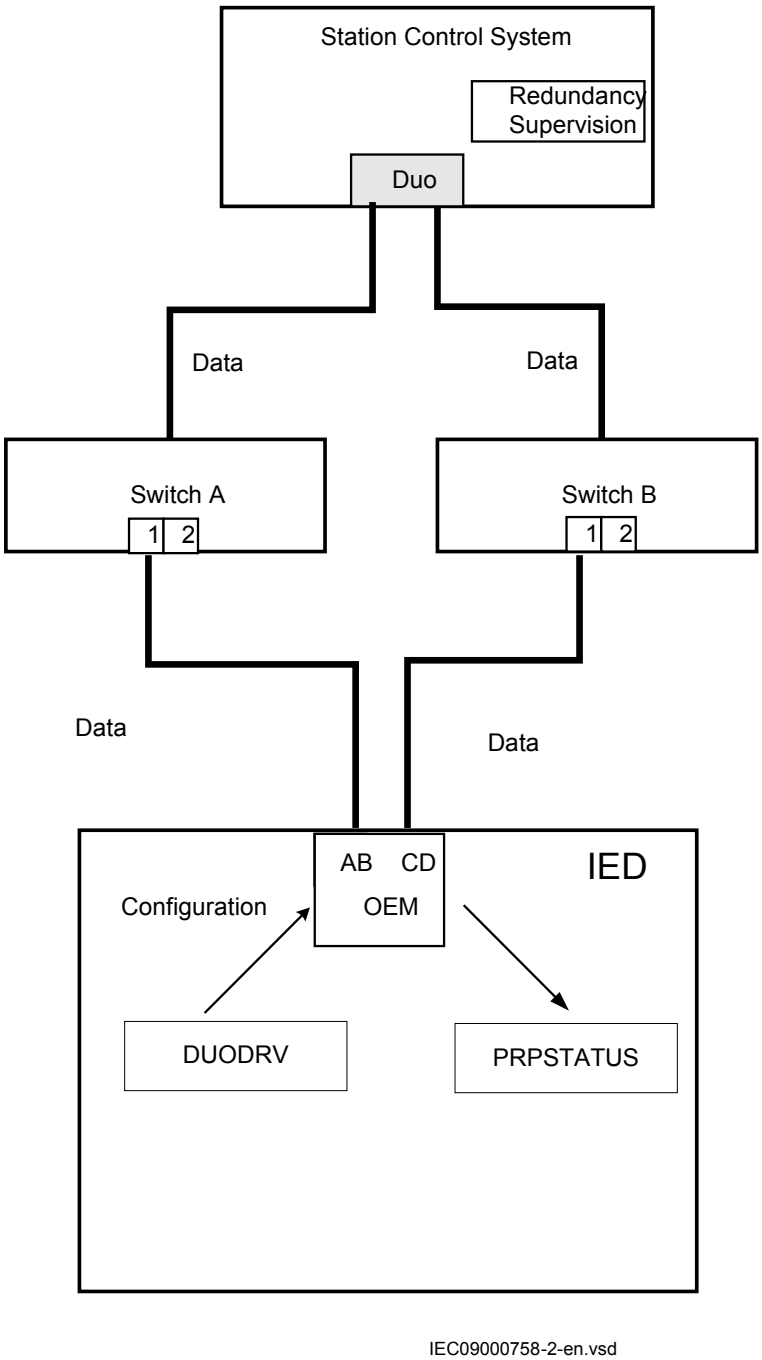

Figure 326: Redundant station bus

4.2.6.2 Setting guidelines

Redundant communication (DUODRV) is configured in the local HMI under **Main menu/Settings/General settings/Communication/Ethernet configuration/Rear OEM - Redundant PRP**

The settings can then be viewed, but not set, in the Parameter Setting tool in PCM600 under **Main menu/IED Configuration/Communication/Ethernet configuration/ DUODRV**:

Operation: The redundant communication will be activated when this parameter is set to *On.*After confirmation the IED will restart and the setting alternatives *Rear OEM - Port AB* and *CD* will not be further displayed in the local HMI. The *ETHLANAB* and *ETHLANCD* in the Parameter Setting Tool are irrelevant when the redundant communication is activated, only DUODRV IPAdress and IPMask are valid.

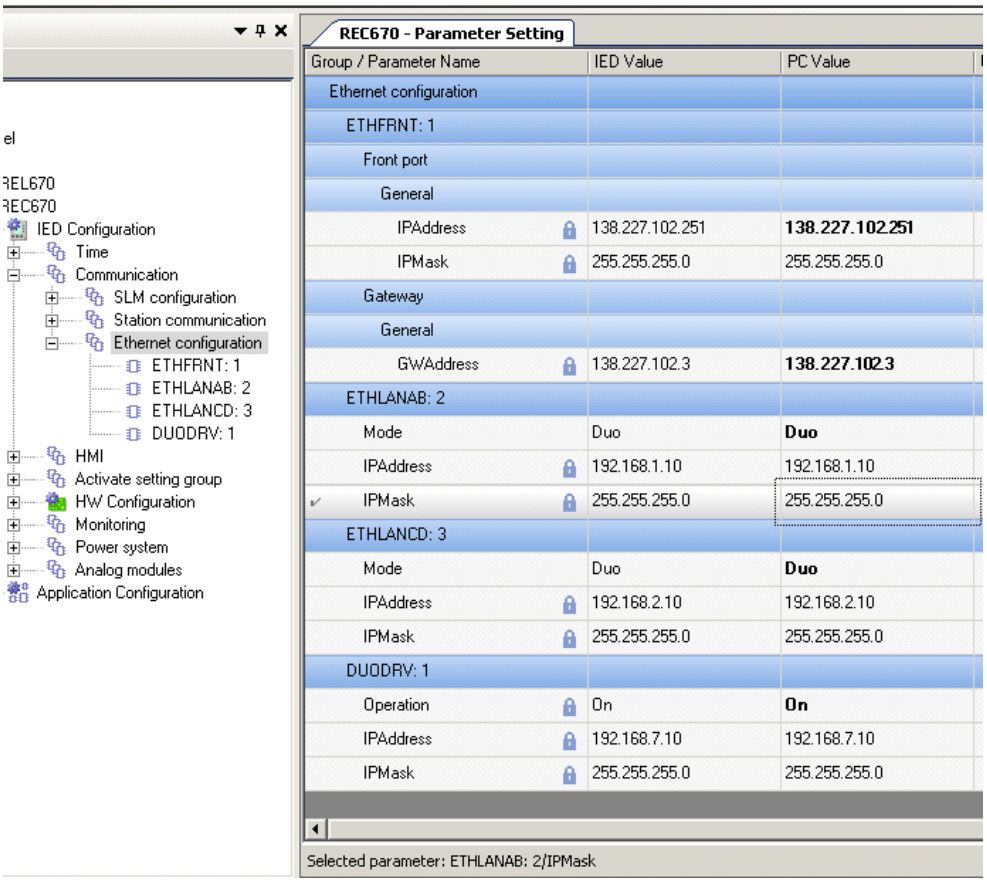

Figure 327: PST screen: DUODRV Operation is set to On, which affect Rear OEM - Port AB and CD which are both set to Duo

4.2.6.3 Setting parameters

Table 248: DUODRV Non group settings (basic)

Name	Values (Range)	Unit	Step	Default	Description
Operation	Disabled Enabled	-	-	Disabled	Disable/Enable Operation
IPAddress	0 - 18	IP Address	1	192.168.7.10	IP-Address
IPMask	0 - 18	IP Address	1	255.255.255.0	IP-Mask

4.3 IEC 61850-9-2LE communication protocol

4.3.1 Introduction

Every IED can be provided with a communication interface enabling it to connect to a process bus, in order to get data from analog data acquisition units close to the process (primary apparatus), commonly known as Merging Units (MU). The protocol used in this case is the IEC 61850-9-2LE communication protocol.

Note that the IEC 61850-9-2LE standard does not specify the quality of the sampled values, only the transportation. Thus, the accuracy of the current and voltage inputs to the merging unit and the inaccuracy added by the merging unit must be coordinated with the requirement for actual type of protection function.

Factors influencing the accuracy of the sampled values from the merging unit are for example anti aliasing filters, frequency range, step response, truncating, A/D conversion inaccuracy, time tagging accuracy etc.

In principle shall the accuracy of the current and voltage transformers, together with the merging unit, have the same quality as direct input of currents and voltages.

The process bus physical layout can be arranged in several ways, described in Annex B of the standard, depending on what are the needs for sampled data in a substation.

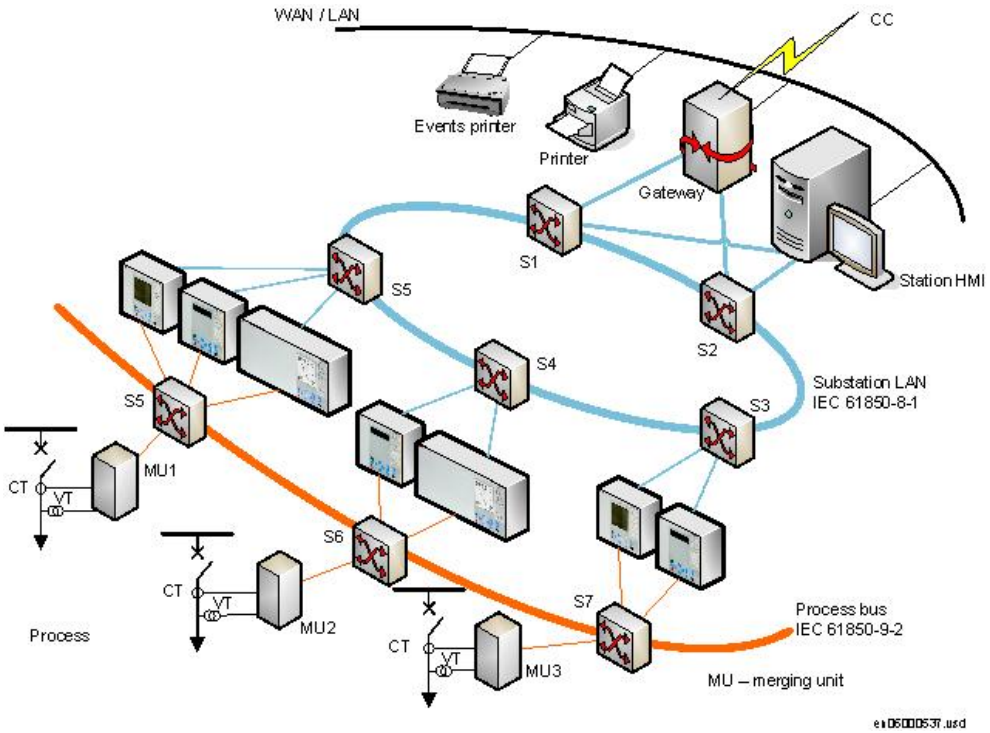

Figure 328: Example of a station configuration with separated process bus and station bus

The IED can get analog values simultaneously from a classical CT or VT and from a Merging Unit, like in this example:

The merging units (MU) are called so because they can gather analog values from one or more measuring transformers, sample the data and send the data over process bus to other clients (or subscribers) in the system. Some merging units are able to get data from classical measuring transformers, others from non-conventional measuring transducers and yet others can pick up data from both types. The electronic part of a non-conventional measuring transducer (like a Rogowski coil or a capacitive divider) can represent a MU by itself as long as it can send sampled data over process bus.

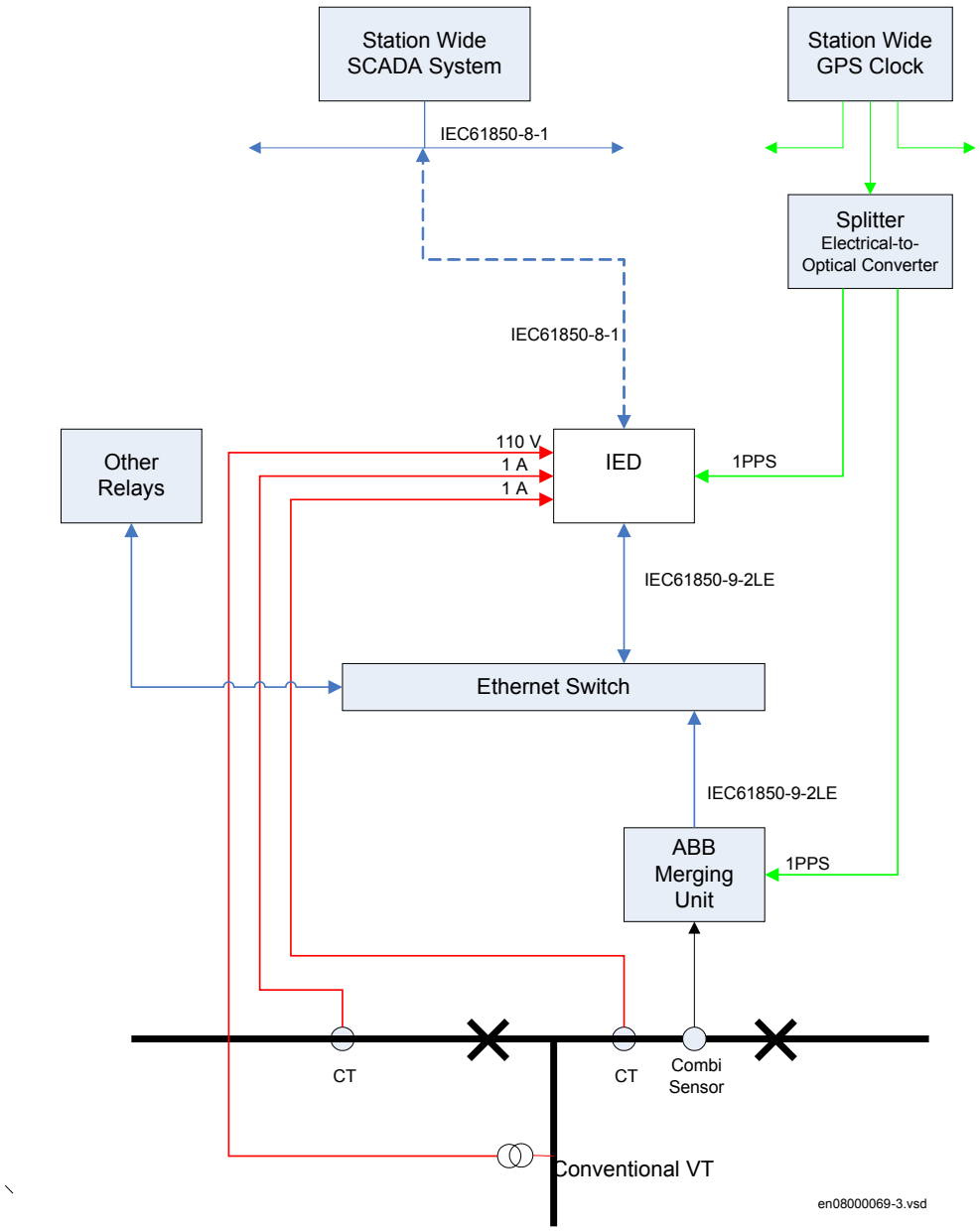

Figure 329: Example of a station configuration with the IED receiving analog values from both classical measuring transformers and merging units.

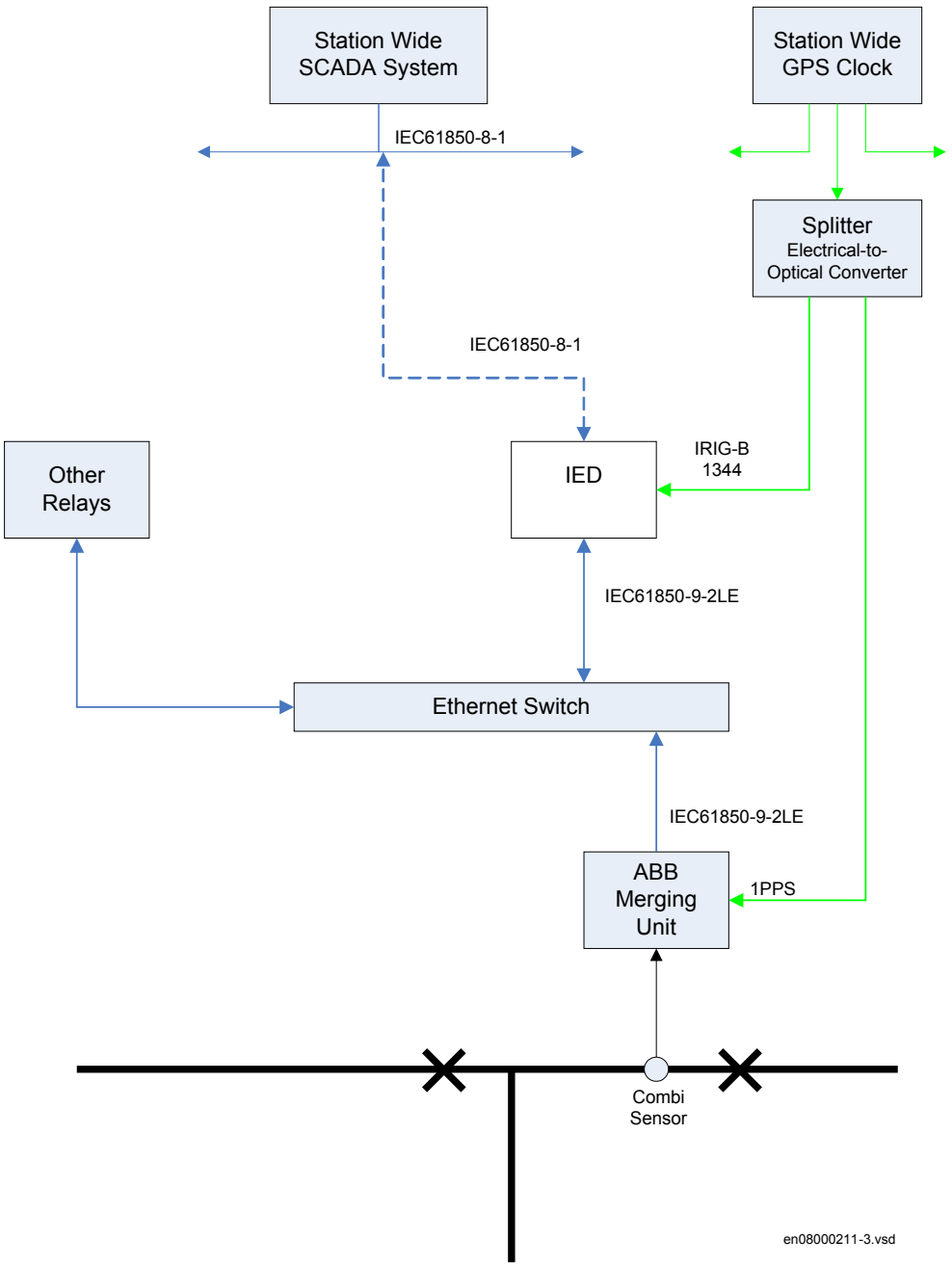

Figure 330: Example of a station configuration with the IED receiving analogue values from merging units

4.3.2 Setting guidelines

There are several settings related to the Merging Units in local HMI under:

Main menu\Settings\General Settings\Analog Modules\Merging Unit x

where x can take the value 1,2 or 3.

4.3.2.1 Specific settings related to the IEC 61850-9-2LE communication

The process bus communication IEC 61850-9-2LE have specific settings, similar to the analog inputs modules.

In order to achieve the desired functionality of the IED, signals UN optional and IN optional must **not** be connected from the virtual analog modules (SMAI) to the Merging Units. See figure 331.

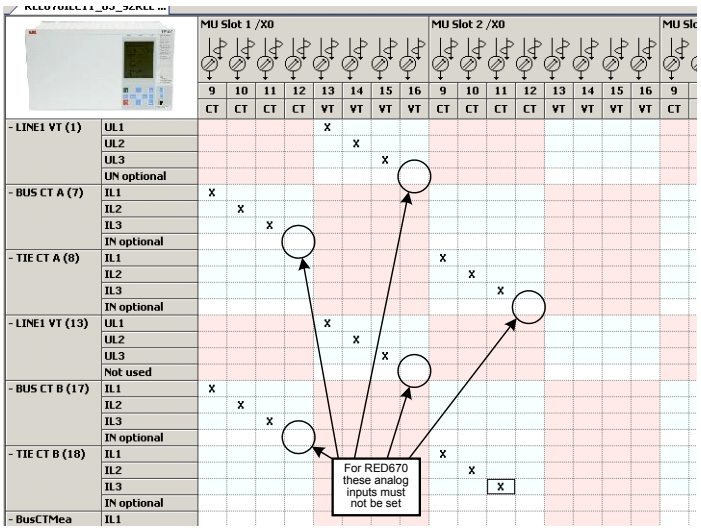

Figure 331: Merging units appearance in the signal matrix tool and the connection of signals

Besides the names of the merging unit channels (that can be edited only from PCM600, **not** from the local HMI) there are important settings related to the merging units and time synchronization of the signals:

When changing the sending (MU unit) MAC address, a reboot of the IED is required.

If there are more than one sample group involved, then time synch is mandatory and the protection functions will be blocked if there is no time synchronization.

SmpGrp – this setting parameter is not used

CTStarPointx this parameter is currently not used. To specify direction to or from object, use setting *Negation* on the pre-processing groups (SMAI).

AppSynch: If this parameter is set to *Synch* and the IED HW-time synchronization is lost or the synchronization to the MU time is lost, the protection functions in the list 249 will be blocked and the output SYNCH will be set.

SynchMode: marks how the IED will receive the data coming from a merging unit:

- if it is set to *NoSynch*, then when the sampled values arrive, there will be no check on the “SmpSynch” flag
- If it is set to *Operation*, the “SmpSynch” flag will be checked all time.
- setting *Init*, should not be used

The rest of the setting are explained in table 250.

4.3.2.2 Consequence on accuracy for power measurement functions when using signals from IEC 61850-9-2LE communication

The Power measurement functions (CVMMXN, CMMXU, VMMXU and VNMMXU) contains correction factors to account for the non-linearity in the input circuits, mainly in the input transformers, when using direct analogue connection to the IED.

The IED will use the same correction factors also when feeding the IED with analog signals over IEC 61850-9-2LE. Since the signals via IEC 61850-9-2LE are not subject to the same non-linearity errors this will cause an inaccuracy in the measured values.

For voltage signals the correction factors are less than 0.05% of the measured value and no angle compensation why the impact on reported value can be ignored.

For current signals the correction factors will cause a not insignificant impact on the reported values at low currents. The correction factors are +2.4% and -3.6 degrees at signal levels below 5% of set base current, +0.6% and -1.12 degrees at signal level 30% of set base current and 0% and -0.44 degrees at signal levels above 100% of set base current. Between the calibration points 5%, 30% and 100% of set base current, linear interpolation is used. Since the output from the Power measurement function is used as an input for the Energy measuring function (ETPMMTR) the above described impact will also be valid for the output values for ETPMMTR.

4.3.2.3 Loss of communication

If IEC 61850-9-2LE communication is lost, protection functions in table 249are blocked:

Table 249: Blocked protection functions if IEC 61850-9-2LE communication is interrupted.

Function description	IEC 61850 identification	Function description	IEC 61850 identification
Broken conductor check	BRCPTOC	Phase preference logic	PPLPHIZ
Capacitor bank protection	CBPGAPC	PoleSlip/Out-of-step protection	PSPPPAM
Breaker failure protection	CCRBRF	Restricted earth fault protection, low impedance	REFPDIF
Pole discordance protection	CCRPLD	Two step residual overvoltage protection	ROV2PTOV
Breaker failure protection, single phase version	CCSRBRF	Rate-of-change frequency protection	SAPFRC
Current circuit supervison	CCSRDIF	Overfrequency protection	SAPTOF
Compensated over- and undervoltage protection	COUVGAPC	Underfrequency protection	SAPTUF
General currrent and voltage protection	CVGAPC	Sudden change in current variation	SCCVPTOC
Current reversal and weakend infeed logic for residual overcurrent protection	ECRWPSCH	Fuse failure supervision	SDDRFUF
Four step residual overcurrent protection	EF4PTOC	Sensitive Directional residual over current and power protetcion	SDEPSDE
Instantaneous residual overcurrent protection	EFPIOC	Synchrocheck, energizing check, and synchronizing	SESRSYN
Phase selection, quadrilateral characteristic with fixed angle	FDPSPDIS	Stub protection	STBPTOC
Faulty phase identification with load enchroachment	FMPSPDIS	Additional security logic for differential protection	STSGGIO
Phase selection, quadrilateral characteristic with settable angle	FRPSPDIS	Transformer differential protection, two winding	T2WPDIF
Directional Overpower protection	GOPPDOP	Transformer differential protection, three winding	T3WPDIF

Table continues on next page

Function description	IEC 61850 identification	Function description	IEC 61850 identification
Directional Underpower protection	GUPPDUP	Automatic voltage control for tapchanger, single control	TR1ATCC
1Ph High impedance differential protection	HZPDIF	Automatic voltage control for tapchanger, parallel control	TR8ATCC
Line differential protection, 3 CT sets, 23 line ends	L3CPDIF	Thermal overload protection, two time constants	TRPTTR
Line differential protection, 6 CT sets, 35 line ends	L6CPDIF	Two step undervoltage protection	UV2PTUV
Low active power and power factor protection	LAPPGAPC	Voltage differential protection	VDCPTOV
Negative sequence overcurrent protection	LCNSPTOC	Current reversal and weak-end infeed logic for phase segregated communication	ZC1WPSCH
Negative sequence overvoltage protection	LCNSPTOV	Local acceleration logic	ZCLCPLAL
Three phase overcurrent	LCP3PTOC	Current reversal and weak-end infeed logic for distance protection	ZCRWPSCH
Three phase undercurrent	LCP3PTUC	Automatic switch onto fault logic, voltage and current based	ZCVPSOF
Zero sequence overcurrent protection	LCZSPTOC	Directional impedance element for mho characteristic	ZDMRDIR
Zero sequence overvoltage protection	LCZSPTOV	Directional impedance quadrilateral	ZDRDIR
	LDLPDIF	Directional impedance quadrilateral, including series compensation	ZDSRDIR
Loss of excitation	LEXPDIS	Distance measuring zone, quadrilateral characteristic for series compensated lines	ZMCAPDIS
Loss of voltage check	LOVPTUV	Distance measuring zone, quadrilateral characteristic for series compensated lines	ZMCPDIS
Thermal overload protection, one time constant	LPTTR	Fullscheme distance protection, mho characteristic	ZMHPDIS

Table continues on next page

Function description	IEC 61850 identification	Function description	IEC 61850 identification
Line differential protection 3 CT sets, with inzone transformers, 23 line ends	LT3CPDIF	Fullscheme distance protection, quadrilateral for earth faults	ZMMAPDIS
Line differential protection 6 CT sets, with inzone transformers, 35 line ends	LT6CPDIF	Fullscheme distance protection, quadrilateral for earth faults	ZMMPDIS
Negativ sequence time overcurrent protection for machines	NS2PTOC	Distance protection zone, quadrilateral characteristic	ZMQAPDIS
Four step directional negative phase sequence overcurrent protection	NS4PTOC	Distance protection zone, quadrilateral characteristic	ZMQPDIS
Four step phase overcurrent protection	OC4PTOC M	Distance protection zone, quadrilateral characteristic, separate settings	ZMRAPDIS
Overexcitation protection	OEXPVPH	Distance protection zone, quadrilateral characteristic, separate settings	ZMRPDIS
Two step overvoltage protection	OV2PTOV	Power swing detection	ZMRPSB
Four step single phase overcurrent protection	PH4SPTOC	Mho Impedance supervision logic	ZSMGAPC
Instantaneous phase overcurrent protection	PHPIOC		

4.3.2.4 Setting examples for IEC 61850-9-2LE and time synchronization

It is important that the IED and the merging units (MU) uses the same time reference. This is especially true if analog data is used from several sources, for example an internal TRM and a MU. Or if several physical MU is used. The same time reference is important to correlate data so that channels from different sources refer to correct phase angel.

When only one MU is used as analog source it is theoretically possible to do without time- synchronization. However, this would mean that timestamps for analog and binary data/events would be uncorrelated. Disturbance recordings will appear incorrect since analog data will be timestamped by MU and binary events will use internal IED time. For this reason it is recommended to use time synchronization also when analog data emanate from only one MU.

An external time-source can be used to synchronize both the IED and the MU. It is also possible to use the MU as clock-master to synchronize the IED from the MU. When using an external clock, it is possible to set the IED to be synchronized via PPS or IRIG-B. It is also possible to use an internal GPS-receiver in the IED (if the external clock is using GPS).

Using the MU as time source for synchronization

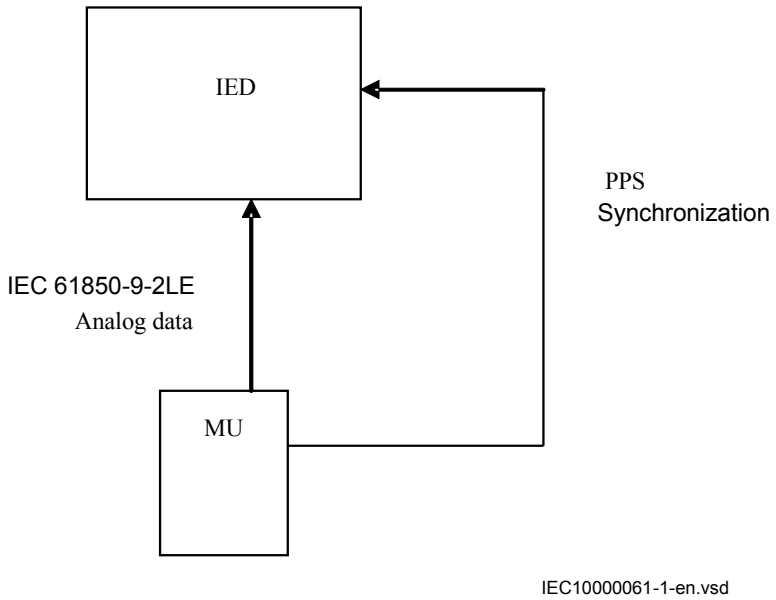

Figure 332: Setting example when MU is the synchronizing source

Settings in local HMI under **Settings/Time/Synchronization/TIMESYNCHGEN/ IEC 61850-9-2:**

- *HwSyncSrc*: set to *PPS* since this is what is generated by the MU (ABB MU)
- *AppSynch* : set to *Synch*, since protection functions should be blocked in case of loss of timesynchronization
- *SyncAccLevel*: could be set to 4us since this corresponds to a maximum phase-angle error of 0.072 degrees at 50Hz
- *fineSyncSource* could still be set to something different in order to correlate events and data to other IED's in the station

Settings in PST in PCM600 under: **Hardware/Analog modules/Merging units/MU01**

- *SyncMode* : set to Operation. This means that the IED will be blocked if the MU loose time synchronization. Since the MU is set as Time-master, this is unlikely to happen so the setting of *SyncMode* is not important in this case

There are 3 signals that monitors state related to time synchronization:

- TSYNCERR signal on the TIMEERR function block. This signal will go high whenever internal *timeQuality* goes above the setting *SyncAccLevel* (*4us* in this case) and this will block the protection functions.. This will happen max 4 seconds after an interruption of the PPS fiber from the MU (or if the *fineSyncSource* is lost).
- SYNCH signal on the MU1_4I_4U function block indicates when protection functions are blocked due to loss of internal time synchronization to the IED (that is loss of the hardware *synchSrc*)
- MUSYNCH signal on the MU_4I_4U function block monitor the synchronization from the MU (in the datastream). When the MU indicates loss of time synchronization this signal will go high. In this case the MU is set to master so it can not loose time synchronization.

The SMPLLOSTsignal will of course also be interesting since this indicate blocking due to missing analog data (interruption of IEC 61850-9-2LE fiber), although this has nothing to do with time synchronization.

Using an external clock for time synchronization

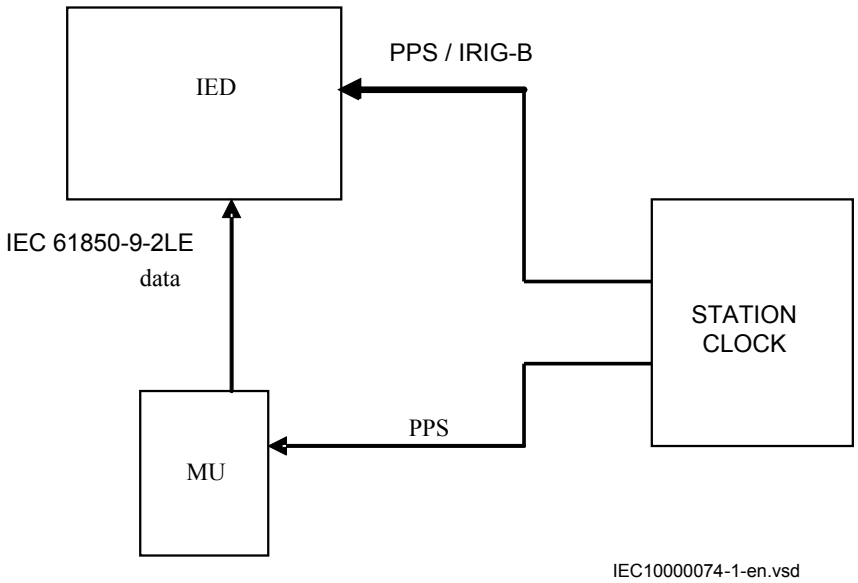

Figure 333: Setting example with external synchronization

Settings in local HMI under **Settings/Time/Synchronization/TIMESYNCHGEN/ IEC 61850-9-2:**

- *HwSyncSrc* : set to *PPS/IRIG-B* depending on available outputs on the clock
- *AppSynch* : set to *Synch*, for blocking protection functions in case of loss of time synchronization
- *SyncAccLevel* : could be set to 4us since this correspond to a maximum phase-angle error of 0.072 degrees at 50Hz
- *fineSyncSource* :should be set to *IRIG-B* if this is available from the clock. If using *PPS* for *HWSyncSrc* , “full-time” has to be acquired from another source. If the station clock is on the local area network (LAN) and has a sntp-server this is one option.

Settings in PST in PCM600 under: **Hardware/Analog modules/Merging units/MU01**

- *SyncMode*: set to *Operation*. This means that the IED will block if the MU loose time synchronization.

There are 3 signals that monitors state related to time synchronization:

- TSYNCERR signal on the TIMEERR function block will go high whenever internal *timeQuality* goes above the setting *SyncAccLevel* (*4us* in this case). This will block the protection functions after maximum 4 seconds after an interruption in the PPS fiber communication from the MU.
- SYNCH signal on the MU_4I_4U function block indicate that protection functions are blocked by loss of internal time synchronization to the IED (that is loss of the *HW-synchSrc*).
- MUSYNCH signal on the MU_4I_4U function block monitors the synchronization flag from the MU (in the datastream). When the MU indicates loss of time synchronization, this signal is set.

A “blockedByTimeSynch” signal could be made by connecting the MUSYNCH and the SYNCH through an OR gate. If also the SMPLLOST signal is connected to the same OR gate, it will be more of a “BlockedByProblemsWith9-2” signal.

No synchronization

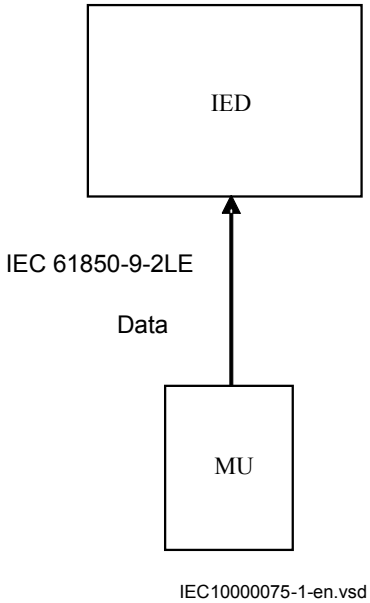

Figure 334: Setting example without time synchronization

It is possible to use IEC 61850-9-2LE communication without time synchronization. Settings in this case under **Settings/Time/Synchronization/TIMESYNCHGEN/IEC 61850-9-2** are:

- *HwSyncSrc*: set to *Off*
- *AppSynch*: set to *NoSynch*. This means that protection functions will not be blocked
- *SyncAccLevel* : set to *unspecified*

Settings in PST in PCM600 under: **Hardware/Analog modules/Merging units/MU01**

- *SyncMode*: set to *NoSynch*. This means that the IED do not care if the MU indicates loss of time synchronization.
- TSYNCERR signal will not be set since there is no configured time synchronization source
- SYNCH signal on the MU_4I_4U function block indicates when protection functions are blocked due to loss of internal time synchronization to the IED. Since *AppSynch* is set to *NoSynch* this signal will not be set.
- MUSYNCH signal on the MU_4I_4U function block will be set if the datastream indicates time synchronization is lost. However, protection functions will not be blocked.

To get higher availability in the protection functions, it is possible to avoid blocking if time synchronization is lost when there is a single source of analog data. This means that if there is only one physical MU and no TRM, parameter *AppSynch* can be set to

NoSynch but parameter *HwSyncSrc* can still be set to *PPS*. This will keep analog and binary data correlated in disturbance recordings while not blocking the protection functions if PPS is lost.

4.3.3 Setting parameters

Table 250: MU1_4I_4U Non group settings (basic)

Name	Values (Range)	Unit	Step	Default	Description
SVId	0 - 35	-	1	ABB_MU0101	MU identifier
SmplGrp	0 - 65535	-	1	0	Sampling group
CT_WyePoint1	FromObject ToObject	-	-	ToObject	ToObject= towards protected object, FromObject= the opposite
CT_WyePoint2	FromObject ToObject	-	-	ToObject	ToObject= towards protected object, FromObject= the opposite
CT_WyePoint3	FromObject ToObject	-	-	ToObject	ToObject= towards protected object, FromObject= the opposite
CT_WyePoint4	FromObject ToObject	-	-	ToObject	ToObject= towards protected object, FromObject= the opposite

Table 251: MU1_4I_4U Non group settings (advanced)

Name	Values (Range)	Unit	Step	Default	Description
SynchMode	NoSynch Init Operation	-	-	Operation	Synchronization mode

4.4 LON communication protocol

4.4.1 Application

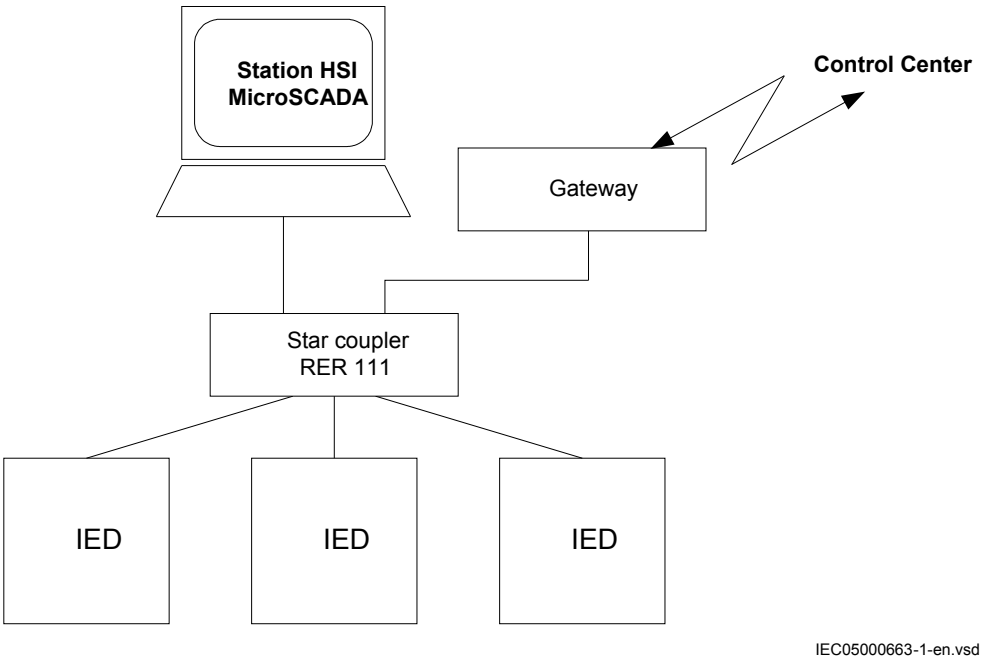

Figure 335: Example of LON communication structure for a substation automation system

An optical network can be used within the substation automation system. This enables communication with the IEDs in the 670 series through the LON bus from the operator's workplace, from the control center and also from other IEDs via bay-to-bay horizontal communication.

The fibre optic LON bus is implemented using either glass core or plastic core fibre optic cables.

Table 252: Specification of the fibre optic connectors

	Glass fibre	Plastic fibre
Cable connector	ST-connector	snap-in connector
Cable diameter	62.5/125 m	1 mm
Max. cable length	1000 m	10 m
Wavelength	820-900 nm	660 nm
Transmitted power	-13 dBm (HFBR-1414)	-13 dBm (HFBR-1521)
Receiver sensitivity	-24 dBm (HFBR-2412)	-20 dBm (HFBR-2521)

The LON Protocol

The LON protocol is specified in the LonTalkProtocol Specification Version 3 from Echelon Corporation. This protocol is designed for communication in control networks and is a peer-to-peer protocol where all the devices connected to the network can communicate with each other directly. For more information of the bay-to-bay communication, refer to the section Multiple command function.

Hardware and software modules

The hardware needed for applying LON communication depends on the application, but one very central unit needed is the LON Star Coupler and optical fibres connecting the star coupler to the IEDs. To interface the IEDs from MicroSCADA, the application library LIB670 is required.

The HV Control 670 software module is included in the LIB520 high-voltage process package, which is a part of the Application Software Library within MicroSCADA applications.

The HV Control 670 software module is used for control functions in IEDs in the 670 series. This module contains the process picture, dialogues and a tool to generate the process database for the control application in MicroSCADA.

Use the LON Network Tool (LNT) to set the LON communication. This is a software tool applied as one node on the LON bus. To communicate via LON, the IEDs need to know

- The node addresses of the other connected IEDs.
- The network variable selectors to be used.

This is organized by LNT.

The node address is transferred to LNT via the local HMI by setting the parameter *ServicePinMsg = Yes*. The node address is sent to LNT via the LON bus, or LNT can scan the network for new nodes.

The communication speed of the LON bus is set to the default of 1.25 Mbit/s. This can be changed by LNT.

4.4.2 Setting parameters

Table 253: HORZCOMM Non group settings (basic)

Name	Values (Range)	Unit	Step	Default	Description
Operation	Disabled Enabled	-	-	Disabled	Operation

Table 254: ADE Non group settings (basic)

Name	Values (Range)	Unit	Step	Default	Description
Operation	Disabled Enabled	-	-	Disabled	Operation
TimerClass	Slow Normal Fast	-	-	Slow	Timer class

4.5 SPA communication protocol

4.5.1 Application

SPA communication protocol as an alternative to IEC 60870-5-103. The same communication port as for IEC 60870-5-103 is used.

SPA communication is applied using the front communication port. For this purpose, no serial communication module is required in the IED. Only PCM600 software in the PC and a crossed-over Ethernet cable for front connection is required.

When communicating with a PC (as shown in figure 337), using the rear SPA port on the serial communication module (SLM), the only hardware required for a local monitoring system is:

- Optical fibres for the SPA bus loop
- Optical/electrical converter for the PC
- PC

A remote monitoring system for communication over the public telephone network also requires telephone modems and a remote PC.

The software required for a local monitoring system is PCM600, and for a remote monitoring system it is PCM600 in the remote PC only.

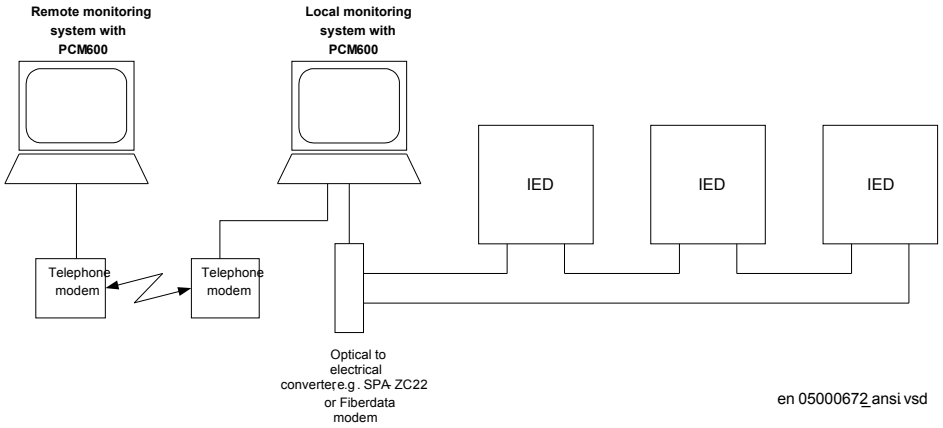

Figure 336: SPA communication structure for a monitoring system. The monitoring system can either be local, remote or a combination of both

When communicating with a PC connected to the utility substation LAN, via WAN and the utility office LAN, as shown in figure 337, and using the rear Ethernet port on the optical Ethernet module (OEM), the only hardware required for a station monitoring system is:

- Optical fibres from the IED to the utility substation LAN.
- PC connected to the utility office LAN.

The software required is PCM600.

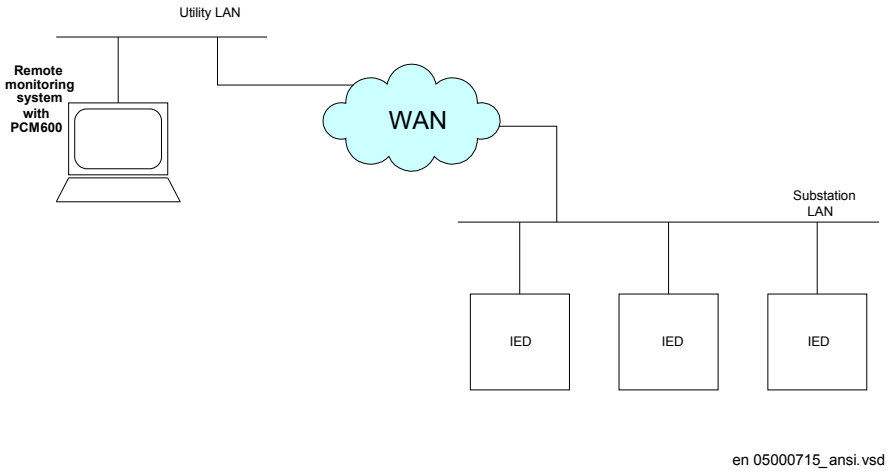

Figure 337: SPA communication structure for a remote monitoring system via a substation LAN, WAN and utility LAN

The SPA communication is mainly used for the Station Monitoring System. It can include different IEDs with remote communication possibilities. Connection to a computer (PC) can be made directly (if the PC is located in the substation) or by telephone modem through a telephone network with ITU (former CCITT) characteristics or via a LAN/WAN connection.

glass	<1000 m according to optical budget
plastic	<20 m (inside cubicle) according to optical budget

Functionality

The SPA protocol V2.5 is an ASCII-based protocol for serial communication. The communication is based on a master-slave principle, where the IED is a slave and the PC is the master. Only one master can be applied on each fibre optic loop. A program is required in the master computer for interpretation of the SPA-bus codes and for translation of the data that should be sent to the IED.

For the specification of the SPA protocol V2.5, refer to SPA-bus Communication Protocol V2.5.

4.5.2 Setting guidelines

The setting parameters for the SPA communication are set via the local HMI.

SPA, IEC 60870-5-103 and DNP3 uses the same rear communication port. Set the parameter *Operation*, under **Main menu /Settings /General settings / Communication /SLM configuration /Rear optical SPA-IEC-DNP port /Protocol selection to the selected protocol**.

When the communication protocols have been selected, the IED is automatically restarted.

The most important settings in the IED for SPA communication are the slave number and baud rate (communication speed). These settings are absolutely essential for all communication contact to the IED.

These settings can only be done on the local HMI for rear channel communication and for front channel communication.

The slave number can be set to any value from 1 to 899, as long as the slave number is unique within the used SPA loop.

The baud rate, which is the communication speed, can be set to between 300 and 38400 baud. Refer to technical data to determine the rated communication speed for the selected communication interfaces. The baud rate should be the same for the whole

station, although different baud rates in a loop are possible. If different baud rates in the same fibre optical loop or RS485 network are used, consider this when making the communication setup in the communication master, the PC.

For local fibre optic communication, 19200 or 38400 baud is the normal setting. If telephone communication is used, the communication speed depends on the quality of the connection and on the type of modem used. But remember that the IED does not adapt its speed to the actual communication conditions, because the speed is set on the local HMI.

4.5.3 Setting parameters

Table 255: SPA Non group settings (basic)

Name	Values (Range)	Unit	Step	Default	Description
SlaveAddress	1 - 899	-	1	30	Slave address
BaudRate	300 Bd 1200 Bd 2400 Bd 4800 Bd 9600 Bd 19200 Bd 38400 Bd	-	-	9600 Bd	Baudrate on serial line

Table 256: LONSPA Non group settings (basic)

Name	Values (Range)	Unit	Step	Default	Description
Operation	Disabled Enabled	-	-	Disabled	Operation
SlaveAddress	1 - 899	-	1	30	Slave address

4.6 IEC 60870-5-103 communication protocol

4.6.1 Application

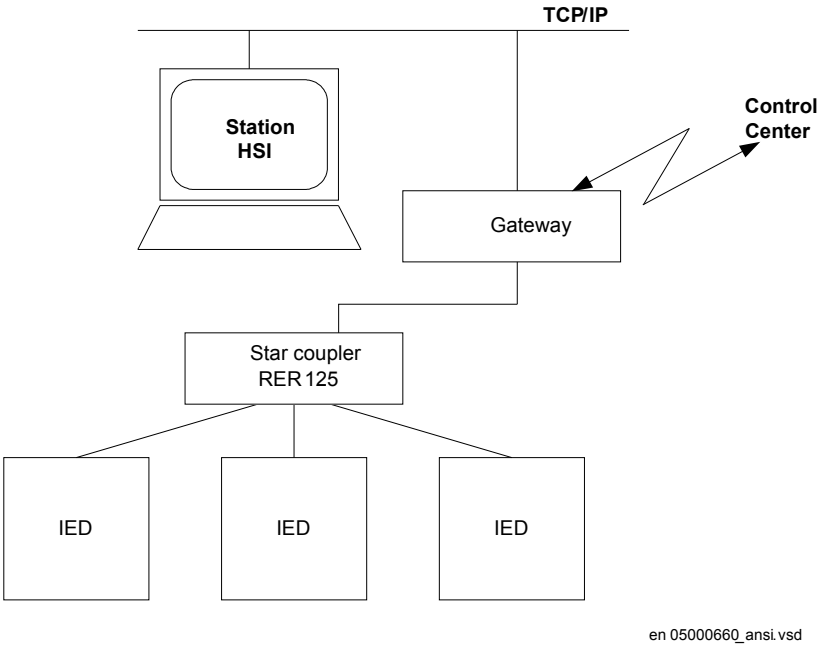

Figure 338: Example of IEC 60870-5-103 communication structure for a substation automation system

IEC 60870-5-103 communication protocol is mainly used when a protection IED communicates with a third party control or monitoring system. This system must have software that can interpret the IEC 60870-5-103 communication messages.

Functionality

IEC 60870-5-103 is an unbalanced (master-slave) protocol for coded-bit serial communication exchanging information with a control system. In IEC terminology a primary station is a master and a secondary station is a slave. The communication is based on a point-to-point principle. The master must have software that can interpret the IEC 60870-5-103 communication messages. For detailed information about IEC 60870-5-103, refer to IEC60870 standard part 5: Transmission protocols, and to the section 103, Companion standard for the informative interface of protection equipment.

Design

General

The protocol implementation consists of the following functions:

- Event handling
- Report of analog service values (measurands)
- Fault location
- Command handling
  - Autorecloser ON/OFF
  - Teleprotection ON/OFF
  - Protection ON/OFF
  - LED reset
  - Characteristics 1 - 4 (Setting groups)
- File transfer (disturbance files)
- Time synchronization

Hardware

When communicating locally with a Personal Computer (PC) or a Remote Terminal Unit (RTU) in the station, using the SPA/IEC port, the only hardware needed is:· Optical fibres, glass/plastic· Opto/electrical converter for the PC/RTU· PC/RTU

Commands

The commands defined in the IEC 60870-5-103 protocol are represented in a dedicated function blocks. These blocks have output signals for all available commands according to the protocol.

- IED commands in control direction

Function block with defined IED functions in control direction, I103IEDCMD. This block use PARAMETR as FUNCTION TYPE, and INFORMATION NUMBER parameter is defined for each output signal.

- Function commands in control direction

Function block with pre defined functions in control direction, I103CMD. This block includes the FUNCTION TYPE parameter, and the INFORMATION NUMBER parameter is defined for each output signal.

- Function commands in control direction

Function block with user defined functions in control direction, I103UserCMD. These function blocks include the FUNCTION TYPE parameter for each block in the private range, and the INFORMATION NUMBER parameter for each output signal.

Status

The events created in the IED available for the IEC 60870-5-103 protocol are based on the:

- IED status indication in monitor direction

Function block with defined IED functions in monitor direction, I103IED. This block use PARAMETER as FUNCTION TYPE, and INFORMATION NUMBER parameter is defined for each input signal.

- Function status indication in monitor direction, user-defined

Function blocks with user defined input signals in monitor direction, I103UserDef. These function blocks include the FUNCTION TYPE parameter for each block in the private range, and the INFORMATION NUMBER parameter for each input signal.

- Supervision indications in monitor direction

Function block with defined functions for supervision indications in monitor direction, I103Superv. This block includes the FUNCTION TYPE parameter, and the INFORMATION NUMBER parameter is defined for each output signal.

- Ground fault indications in monitor direction

Function block with defined functions for ground fault indications in monitor direction, I103EF. This block includes the FUNCTION TYPE parameter, and the INFORMATION NUMBER parameter is defined for each output signal.

- Fault indications in monitor direction, type 1

Function block with defined functions for fault indications in monitor direction, I103FltDis. This block includes the FUNCTION TYPE parameter, and the INFORMATION NUMBER parameter is defined for each input signal. This block is suitable for distance protection function.

- Fault indications in monitor direction, type 2

Function block with defined functions for fault indications in monitor direction, I103FltStd. This block includes the FUNCTION TYPE parameter, and the INFORMATION NUMBER parameter is defined for each input signal.

This block is suitable for line differential, transformer differential, over-current and ground-fault protection functions.

- Autorecloser indications in monitor direction

Function block with defined functions for autorecloser indications in monitor direction, I103AR. This block includes the FUNCTION TYPE parameter, and the INFORMATION NUMBER parameter is defined for each output signal.

Measurands

The measurands can be included as type 3.1, 3.2, 3.3, 3.4 and type 9 according to the standard.

- Measurands in public range

Function block that reports all valid measuring types depending on connected signals, I103Meas.

- Measurands in private range

Function blocks with user defined input measurands in monitor direction, I103MeasUsr. These function blocks include the FUNCTION TYPE parameter for each block in the private range, and the INFORMATION NUMBER parameter for each block.

Fault location

The fault location is expressed in reactive ohms. In relation to the line length in reactive ohms, it gives the distance to the fault in percent. The data is available and reported when the fault locator function is included in the IED.

Disturbance recordings

- The transfer functionality is based on the Disturbance recorder function. The analog and binary signals recorded will be reported to the master by polling. The eight last disturbances that are recorded are available for transfer to the master. A file that has been transferred and acknowledged by the master cannot be transferred again.
- The binary signals that are reported by polling are those that are connected to the disturbance function blocks B1RBDR to B6RBDR. These function blocks include the function type and the information number for each signal. For more information on the description of the Disturbance report in the Technical reference manual. The analog channels, that are reported, are those connected to the disturbance function blocks A1RADR to A4RADR. The eight first ones belong to the public range and the remaining ones to the private range.

Settings

Settings from the local HMI

SPA, IEC 60870-5-103 and DNP3 uses the same rear communication port. Set the parameter *Operation*, under **Main menu/Settings /General settings /Communication /**

SLM configuration /Rear optical SPA-IEC-DNP port /Protocol selection to the selected protocol.

When the communication protocols have been selected, the IED is automatically restarted.

The general settings for IEC 60870-5-103 communication are the following:

- *SlaveAddress* and *BaudRate*: Settings for slave number and communication speed (baud rate).
  The slave number can be set to any value between 1 and 31. The communication speed, can be set either to 9600 bits/s or 19200 bits/s.
- *RevPolarity*: Setting for inverting the light (or not).
- *CycMeasRepTime*: Setting for *CycMeasRepTime* must be coordinated with the *xDbRepInt* and *xAngDbRepInt* reporting setting on the MMXU measurement function blocks. See I103MEAS function block for more information.
- *EventRepMode*: Defines the mode for how events are reported.

Event reporting mode

The settings for communication parameters slave number and baud rate can be found on the local HMI under: **Main menu/Settings /General settings /Communication / SLM configuration /Rear optical SPA-IEC-DNP port /Protocol selection to the selected protocol**

Settings from PCM600

Event

For each input of the Event (EVENT) function there is a setting for the information number of the connected signal. The information number can be set to any value between 0 and 255. To get proper operation of the sequence of events the event masks in the event function is to be set to ON_CHANGE. For single-command signals, the event mask is to be set to ON_SET.

In addition there is a setting on each event block for function type. Refer to description of the Main Function type set on the local HMI.

Commands

As for the commands defined in the protocol there is a dedicated function block with eight output signals. Use PCM600 to configure these signals. To realize the BlockOfInformation command, which is operated from the local HMI, the output BLKINFO on the IEC command function block ICOM has to be connected to an input on an event function block. This input must have the information number 20 (monitor direction blocked) according to the standard.

Disturbance Recordings

For each input of the Disturbance recorder function there is a setting for the information number of the connected signal. The information number can be set to any value between 0 and 255.

Furthermore, there is a setting on each input of the Disturbance recorder function for the function type. Refer to description of Main Function type set on the local HMI.

Function and information types

The function type is defined as follows:

128 = distance protection

160 = overcurrent protection

176 = transformer differential protection

192 = line differential protection

Refer to the tables in the Technical reference manual /Station communication, specifying the information types supported by the communication protocol IEC 60870-5-103.

To support the information, corresponding functions must be included in the protection IED.

There is no representation for the following parts:

- Generating events for test mode
- Cause of transmission: Info no 11, Local operation

EIA RS-485 is not supported. Glass or plastic fibre should be used. BFOC/2.5 is the recommended interface to use (BFOC/2.5 is the same as ST connectors). ST connectors are used with the optical power as specified in standard.

For more information, refer to IEC standard IEC 60870-5-103.

4.6.2 Setting parameters

Table 257: IEC60870-5-103 Non group settings (basic)

Name	Values (Range)	Unit	Step	Default	Description
SlaveAddress	0 - 255	-	1	30	Slave address
BaudRate	9600 Bd 19200 Bd	-	-	9600 Bd	Baudrate on serial line
RevPolarity	Disabled Enabled	-	-	Enabled	Invert polarity
CycMeasRepTime	1.0 - 3600.0	-	0.1	5.0	Cyclic reporting time of measurments

Table 258: I103IEDCMD Non group settings (basic)

Name	Values (Range)	Unit	Step	Default	Description
FUNTYPE	1 - 255	FunT	1	255	Function type (1-255)

Table 259: I103CMD Non group settings (basic)

Name	Values (Range)	Unit	Step	Default	Description
FUNTYPE	1 - 255	FunT	1	1	Function type (1-255)

Table 260: I103USRCMD Non group settings (basic)

Name	Values (Range)	Unit	Step	Default	Description
PULSEMOD	0 - 1	Mode	1	1	Pulse mode 0=Steady, 1=Pulsed
T	0.200 - 60.000	s	0.001	0.400	Pulse length
FUNTYPE	1 - 255	FunT	1	1	Function type (1-255)
INFNO_1	1 - 255	InfNo	1	1	Information number for output 1 (1-255)
INFNO_2	1 - 255	InfNo	1	2	Information number for output 2 (1-255)
INFNO_3	1 - 255	InfNo	1	3	Information number for output 3 (1-255)
INFNO_4	1 - 255	InfNo	1	4	Information number for output 4 (1-255)
INFNO_5	1 - 255	InfNo	1	5	Information number for output 5 (1-255)
INFNO_6	1 - 255	InfNo	1	6	Information number for output 6 (1-255)
INFNO_7	1 - 255	InfNo	1	7	Information number for output 7 (1-255)
INFNO_8	1 - 255	InfNo	1	8	Information number for output 8 (1-255)

Table 261: I103IED Non group settings (basic)

Name	Values (Range)	Unit	Step	Default	Description
FUNTYPE	1 - 255	FunT	1	1	Function type (1-255)

Table 262: I103USRDEF Non group settings (basic)

Name	Values (Range)	Unit	Step	Default	Description
FUNTYPE	1 - 255	FunT	1	5	Function type (1-255)
INFNO_1	1 - 255	InfNo	1	1	Information number for binary input 1 (1-255)
INFNO_2	1 - 255	InfNo	1	2	Information number for binary input 2 (1-255)
INFNO_3	1 - 255	InfNo	1	3	Information number for binary input 3 (1-255)
INFNO_4	1 - 255	InfNo	1	4	Information number for binary input 4 (1-255)
INFNO_5	1 - 255	InfNo	1	5	Information number for binary input 5 (1-255)

Table continues on next page

Name	Values (Range)	Unit	Step	Default	Description
INFNO_6	1 - 255	InfNo	1	6	Information number for binary input 6 (1-255)
INFNO_7	1 - 255	InfNo	1	7	Information number for binary input 7 (1-255)
INFNO_8	1 - 255	InfNo	1	8	Information number for binary input 8 (1-255)

Table 263: I103SUPERV Non group settings (basic)

Name	Values (Range)	Unit	Step	Default	Description
FUNTYPE	1 - 255	FunT	1	1	Function type (1-255)

Table 264: I103EF Non group settings (basic)

Name	Values (Range)	Unit	Step	Default	Description
FUNTYPE	1 - 255	FunT	1	160	Function type (1-255)

Table 265: I103FLTDIS Non group settings (basic)

Name	Values (Range)	Unit	Step	Default	Description
FUNTYPE	1 - 255	FunT	1	128	Function type (1-255)

Table 266: I103FLTSTD Non group settings (basic)

Name	Values (Range)	Unit	Step	Default	Description
FUNTYPE	1 - 255	FunT	1	1	Function type (1-255)

Table 267: I103AR Non group settings (basic)

Name	Values (Range)	Unit	Step	Default	Description
FUNTYPE	1 - 255	FunT	1	1	Function type (1-255)

Table 268: I103MEAS Non group settings (basic)

Name	Values (Range)	Unit	Step	Default	Description
RatedI_A	1 - 99999	A	1	3000	Rated current phase A
RatedI_B	1 - 99999	A	1	3000	Rated current phase B
RatedI_C	1 - 99999	A	1	3000	Rated current phase C
RatedI_N	1 - 99999	A	1	3000	Rated residual current IN
RatedV_A	0.05 - 2000.00	kV	0.05	230.00	Rated voltage for phase A
RatedV_B	0.05 - 2000.00	kV	0.05	230.00	Rated voltage for phase B
RatedV_C	0.05 - 2000.00	kV	0.05	230.00	Rated voltage for phase C

Table continues on next page

Name	Values (Range)	Unit	Step	Default	Description
RatedV_AB	0.05 - 2000.00	kV	0.05	400.00	Rated voltage for phase-phase A-B
RatedV_N	0.05 - 2000.00	kV	0.05	230.00	Rated residual voltage VN
RatedP	0.00 - 2000.00	MW	0.05	1200.00	Rated value for active power
RatedQ	0.00 - 2000.00	MVA	0.05	1200.00	Rated value for reactive power
RatedF	50.0 - 60.0	Hz	10.0	50.0	Rated system frequency
FUNTYPE	1 - 255	FunT	1	1	Function type (1-255)

Table 269: I103MEASUSR Non group settings (basic)

Name	Values (Range)	Unit	Step	Default	Description
FUNTYPE	1 - 255	FunT	1	25	Function type (1-255)
INFNO	1 - 255	InfNo	1	1	Information number for measurands (1-255)
RatedMeasur1	0.05 - 10000000000.00	-	0.05	1000.00	Rated value for measurement on input 1
RatedMeasur2	0.05 - 10000000000.00	-	0.05	1000.00	Rated value for measurement on input 2
RatedMeasur3	0.05 - 10000000000.00	-	0.05	1000.00	Rated value for measurement on input 3
RatedMeasur4	0.05 - 10000000000.00	-	0.05	1000.00	Rated value for measurement on input 4
RatedMeasur5	0.05 - 10000000000.00	-	0.05	1000.00	Rated value for measurement on input 5
RatedMeasur6	0.05 - 10000000000.00	-	0.05	1000.00	Rated value for measurement on input 6
RatedMeasur7	0.05 - 10000000000.00	-	0.05	1000.00	Rated value for measurement on input 7
RatedMeasur8	0.05 - 10000000000.00	-	0.05	1000.00	Rated value for measurement on input 8
RatedMeasur9	0.05 - 10000000000.00	-	0.05	1000.00	Rated value for measurement on input 9

4.7 Multiple command and transmit MULTICMDRCV, MULTICMDSND

Function description	IEC 61850 identification	IEC 60617 identification	ANSI/IEEE C37.2 device number
Multiple command and transmit	MULTICMDRCV	-	-
Multiple command and transmit	MULTICMDSND	-	-

4.7.1 Application

The IED can be provided with a function to send and receive signals to and from other IEDs via the interbay bus. The send and receive function blocks has 16 outputs/inputs that can be used, together with the configuration logic circuits, for control purposes within the IED or via binary outputs. When it is used to communicate with other IEDs, these IEDs have a corresponding Multiple transmit function block with 16 outputs to send the information received by the command block.

4.7.2 Setting guidelines

4.7.2.1 Settings

The parameters for the multiple command function are set via PCM600.

The *Mode* setting sets the outputs to either a *Steady* or *Pulsed* mode.

4.7.3 Setting parameters

Table 270: MULTICMDRCV Non group settings (basic)

Name	Values (Range)	Unit	Step	Default	Description
tMaxCycleTime	0.050 - 200.000	s	0.001	11.000	Maximum cycle time between receptions of input data
tMinCycleTime	0.000 - 200.000	s	0.001	0.000	Minimum cycle time between receptions of input data
Mode	Steady Pulsed	-	-	Steady	Mode for output signals
tPulseTime	0.000 - 60.000	s	0.001	0.200	Pulse length for multi command outputs

Table 271: MULTICMDSND Non group settings (basic)

Name	Values (Range)	Unit	Step	Default	Description
tMaxCycleTime	0.000 - 200.000	s	0.001	5.000	Maximum time interval between transmission of output data
tMinCycleTime	0.000 - 200.000	s	0.001	0.000	Minimum time interval between transmission of output data

Section 5 Remote communication

About this chapter

This chapter describes the remote end data communication possibilities through binary signal transferring.

5.1 Binary signal transfer

Function description	IEC 61850 identification	IEC 60617 identification	ANSI/IEEE C37.2 device number
Binary signal transfer	BinSignReceive	-	-
Binary signal transfer	BinSignTransm	-	-

5.1.1 Application

The IEDs can be equipped with communication devices for line differential communication and/or communication of binary signals between IEDs. The same communication hardware is used for both purposes.

Communication between two IEDs geographically on different locations is a fundamental part of the line differential function.

Sending of binary signals between two IEDs, one in each end of a power line is used in teleprotection schemes and for direct transfer trips. In addition to this, there are application possibilities, for example, blocking/enabling functionality in the remote substation, changing setting group in the remote IED depending on the switching situation in the local substation and so on.

When equipped with a LDCM, a 64 kbit/s communication channel can be connected to the IED, which will then have the capacity of 192 binary signals to be communicated with a remote IED. For RED670, the number of binary signals is limited to 8 because the line differential communication is included in the same telegrams.

5.1.1.1 Communication hardware solutions

The LDCM (Line Data Communication Module) has an optical connection such that two IEDs can be connected over a direct fibre (multimode), as shown in figure 339.

The protocol used is IEEE/ANSI C37.94. The distance with this solution is typical 110 km/68 miles.

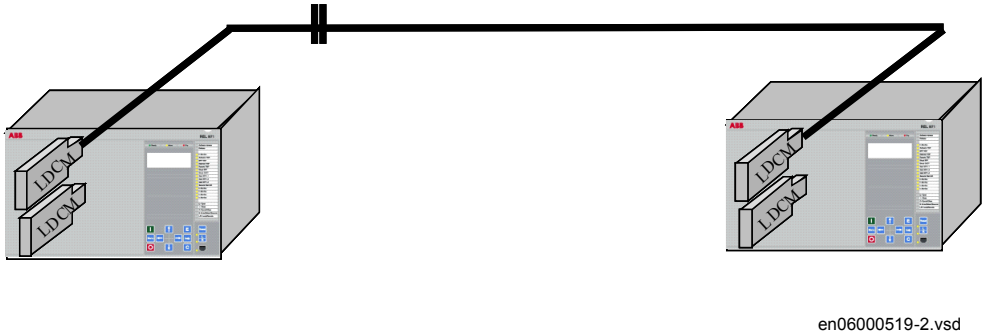

Figure 339: Direct fibre optical connection between two IEDs with LDCM

The LDCM can also be used together with an external optical to galvanic G.703 converter or with an alternative external optical to galvanic X.21 converter as shown in figure 340. These solutions are aimed for connections to a multiplexer, which in turn is connected to a telecommunications transmission network (for example, SDH or PDH).

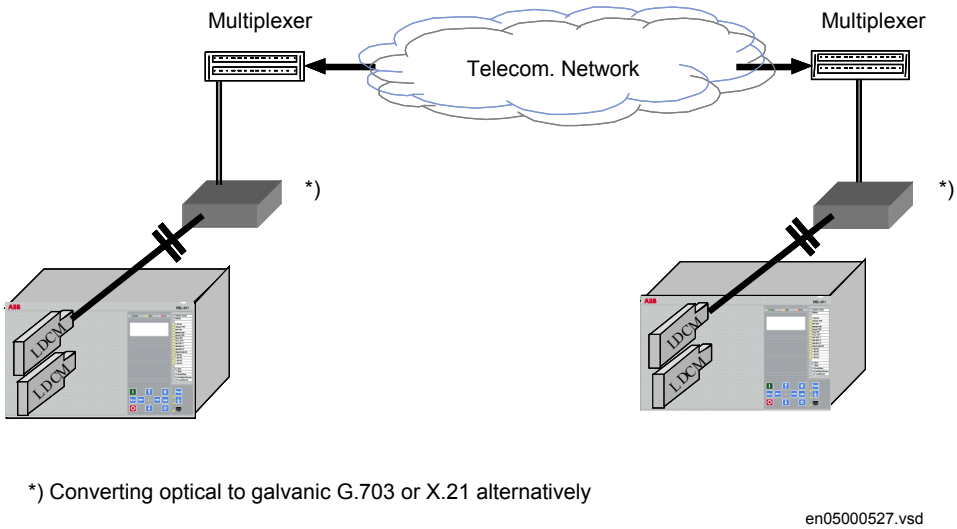

Figure 340: LDCM with an external optical to galvanic converter and a multiplexer

When an external modem G.703 or X21 is used, the connection between LDCM and the modem is made with a multimode fibre of max. 3 km/2 mile length. The IEEE/ANSI C37.94 protocol is always used between LDCM and the modem.

Alternatively, a LDCM with X.21 built-in converter and micro D-sub 15-pole connector output can be used.

5.1.2 Setting guidelines

ChannelMode: This parameter can be set *Enabled* or *Disabled*. Besides this, it can be set *OutOfService* which signifies that the local LDCM is out of service. Thus, with this setting, the communication channel is active and a message is sent to the remote IED that the local IED is out of service, but there is no COMFAIL signal and the analog and binary values are sent as zero.

TerminalNo: This setting shall be used to assign an unique address to each LDCM, in all current differential IEDs. Up to 256 LDCMs can be assigned a unique number. Consider a local IED with two LDCMs:

- LDCM for slot 302: Set *TerminalNo* to 1 and *RemoteTermNo* to 2
- LDCM for slot 303: Set *TerminalNo* to 3 and *RemoteTermNo* to 4

In multiterminal current differential applications, with 4 LDCMs in each IED, up to 20 unique addresses must be set.

The unique address is necessary to give high security against incorrect addressing in the communication system. Using the same number for setting *TerminalNo* in some of the LDCMs, a loop-back test in the communication system can give incorrect trip.

RemoteTermNo: This setting assigns a number to each related LDCM in the remote IED. For each LDCM, the parameter *RemoteTermNo* shall be set to a different value than parameter *TerminalNo*, but equal to the *TerminalNo* of the remote end LDCM. In the remote IED the *TerminalNo* and *RemoteTermNo* settings are reversed as follows:

- LDCM for slot 302: Set *TerminalNo* to 2 and *RemoteTermNo* to 1
- LDCM for slot 303: Set *TerminalNo* to 4 and *RemoteTermNo* to 3

The redundant channel is always configured in the lower position, for example

- Slot 302: Main channel
- Slot 303: Redundant channel

The same is applicable for slot 312-313 and slot 322-323.

DiffSync: Here the method of time synchronization, *Echo* or *GPS*, for the line differential function is selected.

GPSSyncErr: If GPS synchronization is lost, the synchronization of the line differential function will continue during 16 s. based on the stability in the local IED clocks. Thereafter the setting *Block* will block the line differential function or the setting *Echo* will make it continue by using the *Echo* synchronization method. It shall be noticed that using *Echo* in this situation is only safe as long as there is no risk of varying transmission asymmetry.

CommSync: This setting decides the *Master* or *Slave* relation in the communication system and shall not be mistaken for the synchronization of line differential current samples. When direct fibre is used, one LDCM is set as *Master* and the other one as *Slave*. When a modem and multiplexer is used, the IED is always set as *Slave*, as the telecommunication system will provide the clock master.

OptoPower: The setting *LowPower* is used for fibres 0 – 1 km (0.6 mile) and *HighPower* for fibres >1 km (>0.6 mile).

TransmCurr: This setting decides which of 2 possible local currents that shall be transmitted, or if and how the sum of 2 local currents shall be transmitted, or finally if the channel shall be used as a redundant channel.

In a breaker-and-a-half arrangement, there will be 2 local currents, and the grounding on the CTs can be different for these. *CT-SUM* will transmit the sum of the 2 CT groups. *CT-DIFF1* will transmit CT group 1 minus CT group 2 and *CT-DIFF2* will transmit CT group 2 minus CT group 1.

CT-GRP1 or *CT-GRP2* will transmit the respective CT group, and the setting *RedundantChannel* makes the channel be used as a backup channel.

ComFailAlrmDel: Time delay of communication failure alarm. In communication systems, route switching can sometimes cause interruptions with a duration up to 50 ms. Thus, a too short time delay setting might cause nuisance alarms in these situations.

ComFailResDel: Time delay of communication failure alarm reset.

RedChSwTime: Time delay before switchover to a redundant channel in case of primary channel failure.

RedChRturnTime: Time delay before switchback to a the primary channel after channel failure.

AsymDelay: The asymmetry is defined as transmission delay minus receive delay. If a fixed asymmetry is known, the *Echo* synchronization method can be used if the parameter *AsymDelay* is properly set. From the definition follows that the asymmetry will always be positive in one end, and negative in the other end.

AnalogLatency: Local analog latency; A parameter which specifies the time delay (number of samples) between actual sampling and the time the sample reaches the

local communication module, LDCM. The parameter shall be set to 2 when transmitting analog data from the local transformer module, TRM. When a merging unit according to IEC 61850-9-2 is used instead of the TRM this parameter shall be set to 5.

RemAinLatency: Remote analog latency; This parameter corresponds to the *LocAinLatency* set in the remote IED.

MaxTransmDelay: Data for maximum 40 ms transmission delay can be buffered up. Delay times in the range of some ms are common. It shall be noticed that if data arrive in the wrong order, the oldest data will just be disregarded.

CompRange: The set value is the current peak value over which truncation will be made. To set this value, knowledge of the fault current levels should be known. The setting is not overly critical as it considers very high current values for which correct operation normally still can be achieved.

MaxtDiffLevel: Allowed maximum time difference between the internal clocks in respective line end.

5.1.3 Setting parameters

Table 272: LDCMRecBinStat1 Non group settings (basic)

Name	Values (Range)	Unit	Step	Default	Description
ChannelMode	Disabled Enabled OutOfService	-	-	Enabled	Channel mode of LDCM, 0=OFF, 1=ON, 2=OutOfService
TerminalNo	0 - 255	-	1	0	Terminal number used for line differential communication
RemoteTermNo	0 - 255	-	1	0	Terminal number on remote terminal
CommSync	Slave Master	-	-	Slave	Com Synchronization mode of LDCM, 0=Slave, 1=Master
OptoPower	LowPower HighPower	-	-	LowPower	Transmission power for LDCM, 0=Low, 1=High
ComFailAlrmDel	5 - 500	ms	5	100	Time delay before communication error signal is activated
ComFailResDel	5 - 500	ms	5	100	Reset delay before communication error signal is reset
InvertPolX21	Disabled Enabled	-	-	Disabled	Invert polarization for X21 communication

Table 273: LDCMRecBinStat2 Non group settings (basic)

Name	Values (Range)	Unit	Step	Default	Description
ChannelMode	Disabled Enabled OutOfService	-	-	Enabled	Channel mode of LDCM, 0=OFF, 1=ON, 2=OutOfService
NAMECH1	0 - 13	-	1	LDCM#-CH1	User defined string for analog input 1
TerminalNo	0 - 255	-	1	0	Terminal number used for line differential communication
RemoteTermNo	0 - 255	-	1	0	Terminal number on remote terminal
NAMECH2	0 - 13	-	1	LDCM#-CH2	User defined string for analog input 2
DiffSync	Echo GPS	-	-	Echo	Diff Synchronization mode of LDCM, 0=ECHO, 1=GPS
GPSSyncErr	Block Echo	-	-	Block	Operation mode when GPS synchroniation signal is lost
CommSync	Slave Master	-	-	Slave	Com Synchronization mode of LDCM, 0=Slave, 1=Master
NAMECH3	0 - 13	-	1	LDCM#-CH3	User defined string for analog input 3
OptoPower	LowPower HighPower	-	-	LowPower	Transmission power for LDCM, 0=Low, 1=High
NAMECH4	0 - 13	-	1	LDCM#-CH4	User defined string for analog input 4
TransmCurr	CT-GRP1 CT-GRP2 CT-SUM CT-DIFF1 CT-DIFF2	-	-	CT-GRP1	Summation mode for transmitted current values
ComFailAlrmDel	5 - 500	ms	5	100	Time delay before communication error signal is activated
ComFailResDel	5 - 500	ms	5	100	Reset delay before communication error signal is reset
RedChSwTime	5 - 500	ms	5	5	Time delay before switching in redundant channel
RedChRturnTime	5 - 500	ms	5	100	Time delay before switching back from redundant channel
AsymDelay	-20.00 - 20.00	ms	0.01	0.00	Asymmetric delay when communication use echo synch.
AnalogLatency	2 - 20	-	1	2	Latency between local analogue data and transmitted
remAinLatency	2 - 20	-	1	2	Analog latency of remote terminal
MaxTransmDelay	0 - 40	ms	1	20	Max allowed transmission delay
CompRange	0-10kA 0-25kA 0-50kA 0-150kA	-	-	0-25kA	Compression range

Table continues on next page

Name	Values (Range)	Unit	Step	Default	Description
MaxtDiffLevel	200 - 2000	us	1	600	Maximum time diff for ECHO back-up
DeadbandtDiff	200 - 1000	us	1	300	Deadband for t Diff
InvertPolX21	Disabled Enabled	-	-	Disabled	Invert polarization for X21 communication

Table 274: LDCMRecBinStat3 Non group settings (basic)

Name	Values (Range)	Unit	Step	Default	Description
ChannelMode	Disabled Enabled OutOfService	-	-	Enabled	Channel mode of LDCM, 0=OFF, 1=ON, 2=OutOfService
NAMECH1	0 - 13	-	1	LDCM#-CH1	User defined string for analog input 1
TerminalNo	0 - 255	-	1	0	Terminal number used for line differential communication
RemoteTermNo	0 - 255	-	1	0	Terminal number on remote terminal
NAMECH2	0 - 13	-	1	LDCM#-CH2	User defined string for analog input 2
DiffSync	Echo GPS	-	-	Echo	Diff Synchronization mode of LDCM, 0=ECHO, 1=GPS
GPSSyncErr	Block Echo	-	-	Block	Operation mode when GPS synchroniation signal is lost
CommSync	Slave Master	-	-	Slave	Com Synchronization mode of LDCM, 0=Slave, 1=Master
NAMECH3	0 - 13	-	1	LDCM#-CH3	User defined string for analog input 3
OptoPower	LowPower HighPower	-	-	LowPower	Transmission power for LDCM, 0=Low, 1=High
NAMECH4	0 - 13	-	1	LDCM#-CH4	User defined string for analog input 4
TransmCurr	CT-GRP1 CT-GRP2 CT-SUM CT-DIFF1 CT-DIFF2 RedundantChannel	-	-	CT-GRP1	Summation mode for transmitted current values
ComFailAlrmDel	5 - 500	ms	5	100	Time delay before communication error signal is activated
ComFailResDel	5 - 500	ms	5	100	Reset delay before communication error signal is reset
RedChSwTime	5 - 500	ms	5	5	Time delay before switching in redundant channel
RedChRturnTime	5 - 500	ms	5	100	Time delay before switching back from redundant channel
AsymDelay	-20.00 - 20.00	ms	0.01	0.00	Asymmetric delay when communication use echo synch.
AnalogLatency	2 - 20	-	1	2	Latency between local analogue data and transmitted

Table continues on next page

Name	Values (Range)	Unit	Step	Default	Description
remAinLatency	2 - 20	-	1	2	Analog latency of remote terminal
MaxTransmDelay	0 - 40	ms	1	20	Max allowed transmission delay
CompRange	0-10kA 0-25kA 0-50kA 0-150kA	-	-	0-25kA	Compression range
MaxtDiffLevel	200 - 2000	us	1	600	Maximum time diff for ECHO back-up
DeadbandtDiff	200 - 1000	us	1	300	Deadband for t Diff
InvertPolX21	Disabled Enabled	-	-	Disabled	Invert polarization for X21 communication

Section 6 Configuration

About this chapter

This chapter describes the IED configurations.

6.1 Introduction

There are six different software alternatives with which the IED can be ordered. The intention is that these configurations shall suit most applications with minor or no changes. The few changes required on binary input and outputs can be done from the Signal Matrix tool in the PCM600 engineering platform.

The main protection functions are switched *Enabled* and fully operative at delivery whereas back-up functions not generally used will be set to*Disabled*.

The configurations are:

- Single-breaker arrangement. Three-pole tripping arrangement.
- Single breaker arrangement. Single-pole tripping arrangement.
- Multi breaker arrangement. Three-pole tripping arrangement.
- Multi breaker arrangement. Single-pole tripping arrangement.
- Transformer back-up protection.
- Voltage control.

The Multi-breaker arrangement includes Breaker-and-a-half and Ring-breaker arrangements.

The number of IO must be ordered to the application where more IO is foreseen for the Single-pole tripping arrangements respectively the Multi-breaker arrangement.

The basic ordering includes one Binary input module and one Binary Output module, sufficient for the default configured IO to trip and close circuit breaker and with possible communication interface.

However, all IEDs can be reconfigured with the help of the ACT configuration tool in the PCM600 engineering platform. This way the IED can be made suitable for special applications and special logic can be developed, that is logic for automatic opening of disconnectors and closing ring bays, automatic load transfer from one busbar to the other, and so on.

ABB will of course, on request, be available to support the re-configuration work, either direct or to do the design checking.

Optional functions and optional IO ordered will not be configured at delivery. It should be noted that the standard only includes one binary input and one binary output module and only the key functions such as tripping are connected to the outputs. The required total IO must be calculated and specified at ordering.

Hardware modules are configured with the Hardware Configuration Tool in the PCM600 engineering platform.

The Application Configuration tool, which is part of the PCM600 engineering platform, will further to the four arrangements above include also alternatives for each of them with all of the software options configured. These can then be used directly or as assistance of how to configure the options. As the number of options can vary all alternatives possible cannot be handled.

The configurations are as far as found necessary provided with application comments to explain why the signals have been connected in the special way. This is of course for the special application features created, not “standard” functionality.

Application configuration diagrams and connection diagrams for the maximum application can be found in separate document, refer to section "Related documents"

The physical terminals for the configured binary inputs and outputs are found in the connection diagrams for IEC 670 series 1MRK002801-AC.

6.2 Description of configuration RED670

6.2.1 Introduction

6.2.1.1 Description of configuration B32

This configuration is used in applications with Multi-breakers such as Breaker-and-a-half or Ring-busbar arrangements. The tripping is single and/or three poles and the scheme includes a single- and/or three-pole autoreclosing with a synchronism check. Due to the multi-breaker involved, there are two autoreclosers and two Synchronism check devices with a priority circuit to allow one to close first.

The Differential protection is the main function. It is available with communication modules for single or redundant channels and can be used in two- or multi-terminal arrangements.

A phase overcurrent function is included as a time delayed back-up function.

Three zone phase and ground quadrilateral distance functions are included.

Breaker failure function is included for both of the breakers and is with single-phase initiation and a re-trip of own breaker.

Voltage protection functions are available as voltage level supervision.

A Loss of voltage function will open circuit breaker and prepare for system restoration following a system voltage collapse.

A Pole Discrepancy function supervises the position of the breaker poles for the two involved breakers.

The necessary auxiliary functions such as Fuse failure supervision are also included.

The necessary trip logic is provided to trip the involved breakers.

Measuring functions S, P, Q, I, V, PF, f are available for local presentation on the local HMI and/or remote presentation. The availability of analog inputs allows connection to separate metering cores and a built-in calibration on the analog inputs allows calibration at site to very high accuracy, then involving the instrument transformer errors and voltage drops in secondary cabling.

Optional functions can be ordered and include functions such as full control, local and remote, Directional Ground fault, Out of step protection, Frequency protection, and so on. These optional functions must be added to the configuration and loaded into the IED after delivery.

Following should be noted. This connection diagram shows the connection with the basic supplied single binary input and binary output boards. In many cases this is sufficient, in other cases, for example with full control of all apparatuses included more IO cards are required. Our proposal for a full version with control is to use two Binary input modules and two Binary output modules. For systems without Substation Automation a second binary output board might be required.

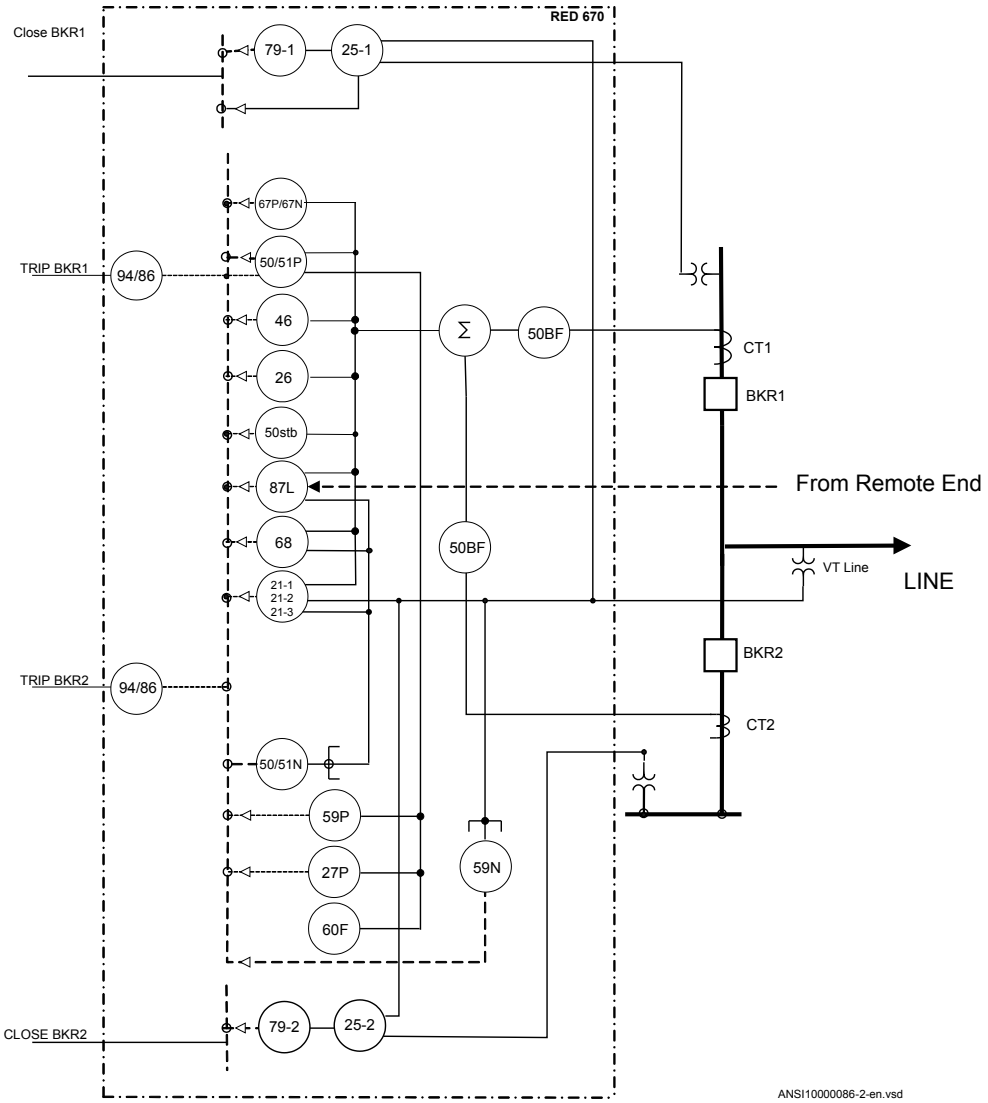

Figure 341: One line diagram

Standard I/O terminal connections and signal matrix pre-configuration

Table 275: Analog input module, slot X401

AIM #		Term #	P	Pre-configured	Alternative single braker	Alternative single braker
1		1	+	Bkr 1 - I_A	Bkr 1 - I_A	Bkr 1 - I_A
		2	-			
2		3	+	Bkr 1 - I_B	Bkr 1 - I_B	Bkr 1 - I_B
		4	-			
Table continues on next page						

AIM #		Term #	P	Pre-configured	Alternative single braker	Alternative single braker
3		5	+	Bkr 1 - I_C	Bkr 1 - I_C	Bkr 1 - I_C
		6	-			
4		7	+	Bkr 2 - I_A	not used	not used
		8	-			
5		9	+	Bkr 2 - I_B	not used	not used
		10	-			
6		11	+	Bkr 2 - I_C	not used	not used
		12	-			
7		13	+	I_P	I_P	I_P
		14	-			
8		15	+	Line Va	Line V_A	Line V_A
		16	-			
9		17	+	Line Vb	Line V_B	Line V_B
		18	-			
10		19	+	Line Vc	Line V_C	Line V_C
		20	-			
11		21	+	Bus $1V_B$	Bus $1V_B$	Bus $1V_B$
		22	-			
12		23	+			
		24	-			

Table 276: Binary input module, slot X31

BIM #		Term #	P	Pre-configured	Single breaker	Single breaker Single pole trip
1		1	+	Bkr1-52a	Bkr1-52a	Bkr1-52a A
		2	-			
2		3	+	Bkr1-52b	Bkr1-52b	Bkr1-52a B
		4	-			
3		5	+	Bkr2-52a	43 L/R	Bkr1-52a C
		6	-			

Table continues on next page

BIM #		Term #	P	Pre-configured	Single breaker	Single breaker Single pole trip
4		7	+	Bkr2-52b	79 On	Bkr1-52b A
		8	-			
5		9	+	43 L/R	Not used	Bkr1-52b B
		10	-			
6		11	+	79 On Bkr1	Not used	Bkr1-52b C
		12	-			
7		13	+	79 On Bkr2	Not used	43 L/R
		14	-			
8		15	+	Not used	Not used	79 ON
		16	-			

Table 277: Binary output module, slot X41

BOM #		Term #	P	Pre-configured	Alt 1Bkr	Alt 1Bkr 1 pole	Alt 2 Bkr 2 pole
1		1	+/-	Bkr1 Trip	Trip	Trip - A	Bkr1Trip -A
		2	-/+				
2						Trip - B	Bkr1Trip- B
		3	+/-				
3		4	+/-	Bkr1 Close	Close	Trip - C	Bkr1Trip -C
		5	-/+				
4						Close	Bkr1Close
		6	+/-				
5		7	+/-	Bkr2 Trip	Bkr Fail	Bkr Fail	Bkr2Trip A
		8	-/+				
6					Not used	Not Used	Bkr2Trip B
		9	+/-				
7		10	+/-	Bkr2 Close	Not used	Not used	Bkr2Trip C
		11	-/+				
8					Not used	Not used	Bkr2 Close
		12	+/-				

Table continues on next page

BOM #		Term #	P	Pre-configured	Alt 1Bkr	Alt 1Bkr 1 pole	Alt 2 Bkr 2 pole
9	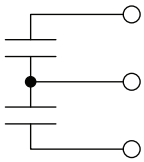	13	+/-	Bkr1 62 BF	Not used	Not used	Bkr1 Fail
		14	-/+				
10					Not used	Not used	Bkr2 Fail
		15	+/-				
11	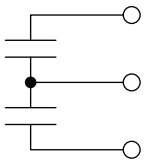	16	+/-	Bkr2 62 BF	Not used	Not used	Not Used
		17	-/+				
12					Not used	Not used	Not Used
		18	+/-				

Table 278: LED mapping

LED #	Pre Configured	Alternate	Alternate	Alternate
1	Phase A	Phase A	Phase A	Phase A
2	Phase B	Phase B	Phase B	Phase B
3	Phase c	Phase c	Phase c	Phase c
4	Grnd	Grnd	Grnd	Grnd
5	87L	87L	87L	87L
6	21 Z1	21	21	21
7	21 Z2	50/51	50/51	50/51
8	21 Z3	27/59	27/59	27/59
9	50/51	62BF	62BF	62BF
10	Comm Fail	Comm Fail	Comm Fail	Comm Fail
11	27/59			
12	Stub Bus			
13	62BF Bkr1			
14	62BF BKR2			
15	PS Block			

Section 7 Glossary

About this chapter

This chapter contains a glossary with terms, acronyms and abbreviations used in ABB technical documentation.

AC	Alternating current
ACT	Application configuration tool within PCM600
A/D converter	Analog-to-digital converter
ADBS	Amplitude deadband supervision
ADM	Analog digital conversion module, with time synchronization
AI	Analog input
ANSI	American National Standards Institute
AR	Autoreclosing
AngNegRes	Setting parameter/ZD/
ArgDirAngDir	Setting parameter/ZD/
ASCT	Auxiliary summation current transformer
ASD	Adaptive signal detection
AWG	American Wire Gauge standard
BBP	Busbar protection
BFP	Breaker failure protection
BI	Binary input
BIM	Binary input module
BOM	Binary output module
BOS	Binary outputs status
BR	External bistable relay
BS	British Standards
BSR	Binary signal transfer function, receiver blocks
BST	Binary signal transfer function, transmit blocks
C37.94	IEEE/ANSI protocol used when sending binary signals between IEDs

CAN	Controller Area Network. ISO standard (ISO 11898) for serial communication
CB	Circuit breaker
CBM	Combined backplane module
CCITT	Consultative Committee for International Telegraph and Telephony. A United Nations-sponsored standards body within the International Telecommunications Union.
CCM	CAN carrier module
CCVT	Capacitive Coupled Voltage Transformer
Class C	Protection Current Transformer class as per IEEE/ ANSI
CMPPS	Combined megapulses per second
CMT	Communication Management tool in PCM600
CO cycle	Close-open cycle
Codirectional	Way of transmitting G.703 over a balanced line. Involves two twisted pairs making it possible to transmit information in both directions
COMTRADE	Standard Common Format for Transient Data Exchange format for Disturbance recorder according to IEEE/ANSI C37.111, 1999 / IEC60255-24
Contra-directional	Way of transmitting G.703 over a balanced line. Involves four twisted pairs, two of which are used for transmitting data in both directions and two for transmitting clock signals
CPU	Central processor unit
CR	Carrier receive
CRC	Cyclic redundancy check
CROB	Control relay output block
CS	Carrier send
CT	Current transformer
CVT or CCVT	Capacitive voltage transformer
DAR	Delayed autoreclosing
DARPA	Defense Advanced Research Projects Agency (The US developer of the TCP/IP protocol etc.)
DBDL	Dead bus dead line
DBLL	Dead bus live line
DC	Direct current

DFC	Data flow control
DFT	Discrete Fourier transform
DHCP	Dynamic Host Configuration Protocol
DIP-switch	Small switch mounted on a printed circuit board
DI	Digital input
DLLB	Dead line live bus
DNP	Distributed Network Protocol as per IEEE Std 1815-2012
DR	Disturbance recorder
DRAM	Dynamic random access memory
DRH	Disturbance report handler
DSP	Digital signal processor
DTT	Direct transfer trip scheme
EHV network	Extra high voltage network
EIA	Electronic Industries Association
EMC	Electromagnetic compatibility
EMF	(Electromotive force)
EMI	Electromagnetic interference
EnFP	End fault protection
EPA	Enhanced performance architecture
ESD	Electrostatic discharge
FCB	Flow control bit; Frame count bit
FOX 20	Modular 20 channel telecommunication system for speech, data and protection signals
FOX 512/515	Access multiplexer
FOX 6Plus	Compact time-division multiplexer for the transmission of up to seven duplex channels of digital data over optical fibers
G.703	Electrical and functional description for digital lines used by local telephone companies. Can be transported over balanced and unbalanced lines
GCM	Communication interface module with carrier of GPS receiver module
GDE	Graphical display editor within PCM600
GI	General interrogation command

GIS	Gas-insulated switchgear
GOOSE	Generic object-oriented substation event
GPS	Global positioning system
GSAL	Generic security application
GTM	GPS Time Module
HDLC protocol	High-level data link control, protocol based on the HDLC standard
HFBR connector type	Plastic fiber connector
HMI	Human-machine interface
HSAR	High speed autoreclosing
HV	High-voltage
HVDC	High-voltage direct current
IDBS	Integrating deadband supervision
IEC	International Electrical Committee
IEC 60044-6	IEC Standard, Instrument transformers – Part 6: Requirements for protective current transformers for transient performance
IEC 60870-5-103	Communication standard for protective equipment. A serial master/slave protocol for point-to-point communication
IEC 61850	Substation automation communication standard
IEC 61850–8–1	Communication protocol standard
IEEE	Institute of Electrical and Electronics Engineers
IEEE 802.12	A network technology standard that provides 100 Mbits/s on twisted-pair or optical fiber cable
IEEE P1386.1	PCI Mezzanine Card (PMC) standard for local bus modules. References the CMC (IEEE P1386, also known as Common Mezzanine Card) standard for the mechanics and the PCI specifications from the PCI SIG (Special Interest Group) for the electrical EMF (Electromotive force).
IEEE 1686	Standard for Substation Intelligent Electronic Devices (IEDs) Cyber Security Capabilities
IED	Intelligent electronic device
I-GIS	Intelligent gas-insulated switchgear
IOM	Binary input/output module
Instance	When several occurrences of the same function are available in the IED, they are referred to as instances of that function.

	One instance of a function is identical to another of the same kind but has a different number in the IED user interfaces. The word "instance" is sometimes defined as an item of information that is representative of a type. In the same way an instance of a function in the IED is representative of a type of function.
IP	1. Internet protocol. The network layer for the TCP/IP protocol suite widely used on Ethernet networks. IP is a connectionless, best-effort packet-switching protocol. It provides packet routing, fragmentation and reassembly through the data link layer. 2. Ingression protection, according to IEC standard
IP 20	Ingression protection, according to IEC standard, level IP20- Protected against solidforeign objects of12.5mm diameter andgreater.
IP 40	Ingression protection, according to IEC standard, level IP40- Protected against solid foreign objects of 1mm diameter and greater.
IP 54	Ingression protection, according to IEC standard, level IP54-Dust-protected,protected againstsplashing water.
IRF	Internal failure signal
IRIG-B:	InterRange Instrumentation Group Time code format B, standard 200
ITU	International Telecommunications Union
LAN	Local area network
LIB 520	High-voltage software module
LCD	Liquid crystal display
LDCM	Line differential communication module
LDD	Local detection device
LED	Light-emitting diode
LNT	LON network tool
LON	Local operating network
MCB	Miniature circuit breaker
MCM	Mezzanine carrier module
MIM	Milli-ampere module
MPM	Main processing module

MVB	Multifunction vehicle bus. Standardized serial bus originally developed for use in trains.
NCC	National Control Centre
NUM	Numerical module
OCO cycle	Open-close-open cycle
OCP	Overcurrent protection
OEM	Optical ethernet module
OLTC	On-load tap changer
OV	Over-voltage
Overreach	A term used to describe how the relay behaves during a fault condition. For example, a distance relay is overreaching when the impedance presented to it is smaller than the apparent impedance to the fault applied to the balance point, that is, the set reach. The relay “sees” the fault but perhaps it should not have seen it.
PCI	Peripheral component interconnect, a local data bus
PCM	Pulse code modulation
PCM600	Protection and control IED manager
PC-MIP	Mezzanine card standard
PMC	PCI Mezzanine card
POR	Permissive overreach
POTT	Permissive overreach transfer trip
Process bus	Bus or LAN used at the process level, that is, in near proximity to the measured and/or controlled components
PSM	Power supply module
PST	Parameter setting tool within PCM600
PT ratio	Potential transformer or voltage transformer ratio
PUTT	Permissive underreach transfer trip
RASC	Synchrocheck relay, COMBIFLEX
RCA	Relay characteristic angle
RFPP	Resistance for phase-to-phase faults
	Resistance for phase-to-ground faults
RISC	Reduced instruction set computer
RMS value	Root mean square value

RS422	A balanced serial interface for the transmission of digital data in point-to-point connections
RS485	Serial link according to EIA standard RS485
RTC	Real-time clock
RTU	Remote terminal unit
SA	Substation Automation
SBO	Select-before-operate
SC	Switch or push button to close
SCS	Station control system
SCADA	Supervision, control and data acquisition
SCT	System configuration tool according to standard IEC 61850
SDU	Service data unit
SLM	Serial communication module. Used for SPA/LON/IEC/ DNP3 communication.
SMA connector	Subminiature version A, A threaded connector with constant impedance.
SMT	Signal matrix tool within PCM600
SMS	Station monitoring system
SNTP	Simple network time protocol – is used to synchronize computer clocks on local area networks. This reduces the requirement to have accurate hardware clocks in every embedded system in a network. Each embedded node can instead synchronize with a remote clock, providing the required accuracy.
SPA	Strömberg protection acquisition, a serial master/slave protocol for point-to-point communication
SRY	Switch for CB ready condition
ST	Switch or push button to trip
Starpoint	Neutral/Wye point of transformer or generator
SVC	Static VAr compensation
TC	Trip coil
TCS	Trip circuit supervision
TCP	Transmission control protocol. The most common transport layer protocol used on Ethernet and the Internet.

TCP/IP	Transmission control protocol over Internet Protocol. The de facto standard Ethernet protocols incorporated into 4.2BSD Unix. TCP/IP was developed by DARPA for Internet working and encompasses both network layer and transport layer protocols. While TCP and IP specify two protocols at specific protocol layers, TCP/IP is often used to refer to the entire US Department of Defense protocol suite based upon these, including Telnet, FTP, UDP and RDP.
TEF	Time delayed gound-fault protection function
TNC connector	Threaded Neill-Concelman, a threaded constant impedance version of a BNC connector
TPZ, TPY, TPX, TPS	Current transformer class according to IEC
UMT	User management tool
Underreach	A term used to describe how the relay behaves during a fault condition. For example, a distance relay is underreaching when the impedance presented to it is greater than the apparent impedance to the fault applied to the balance point, that is, the set reach. The relay does not “see” the fault but perhaps it should have seen it. See also Overreach.
UTC	Coordinated Universal Time. A coordinated time scale, maintained by the Bureau International des Poids et Mesures (BIPM), which forms the basis of a coordinated dissemination of standard frequencies and time signals. UTC is derived from International Atomic Time (TAI) by the addition of a whole number of "leap seconds" to synchronize it with Universal Time 1 (UT1), thus allowing for the eccentricity of the Earth's orbit, the rotational axis tilt (23.5 degrees), but still showing the Earth's irregular rotation, on which UT1 is based. The Coordinated Universal Time is expressed using a 24-hour clock, and uses the Gregorian calendar. It is used for aeroplane and ship navigation, where it is also sometimes known by the military name, "Zulu time." "Zulu" in the phonetic alphabet stands for "Z", which stands for longitude zero.
UV	Undervoltage
WEI	Weak end infeed logic
VT	Voltage transformer
X.21	A digital signalling interface primarily used for telecom equipment

$3I_O$	Three times zero-sequence current. Often referred to as the residual or the -fault current
$3V_O$	Three times the zero sequence voltage. Often referred to as the residual voltage or the neutral point voltage

Contact us

ABB Inc.
1021 Main Campus Drive
Raleigh, NC 27606, USA
Phone Toll Free: 1-800-HELP-365, menu option #8

ABB Inc.
3450 Harvester Road
Burlington, ON L7N 3W5, Canada
Phone Toll Free: 1-800-HELP-365, menu option #8

ABB Mexico S.A. de C.V.
Paseo de las Americas No. 31 Lomas Verdes 3a secc.
53125, Naucalpan, Estado De Mexico, MEXICO
Phone (+1) 440-585-7804, menu option #8

Power and productivity
for a better world™