DIN Rail RTU 560CID11

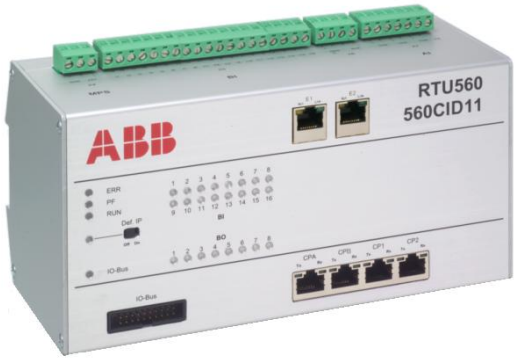

Application

The 560CID11 is a DIN rail RTU560 consisting of a communication unit (CMU), a multi-I/O module (MIO) and a power supply (PSU) in a metal DIN rail housing.

The essential tasks of the 560CID11 are:

- Capturing of 8 analog input signals (mA or V signals)
- Capturing of 16 digital input signals
- Output of 8 binary commands (by relay)
- (1 out of n) check
- Managing and controlling of the RTU211 I/O modules via the 10 pole Wired-OR-Bus (WRB).
- Reading Process events from the input boards.
- Writing commands to the output boards.
- Communicating with control systems and local MMI systems via the 4 integrated serial line interfaces and the 2 Ethernet 10/100 BaseT LAN interfaces.
- Managing the time base for the RTU560 station and synchronizing the I/O modules.
- Handling the dialogue between RTU560 and Web-Browser via the Ethernet interface.

Characteristics

The three microprocessors are the essential hardware parts of the board with the following tasks:

- MPU: 32 Bit Main Processing Unit
- SLC: 8 Bit Serial Line Controller
- I/O: 8 Bit In/Out Micro Controller

The SLC works as master for the RTU560 serial peripheral bus (Wired-OR-Bus). Additionally it administrates the time base for the I/O modules and their periodic time synchronization.

The MPU is responsible for the main tasks. One of them is the handling of the absolute time and date. Time can be set and synchronized from the central system via the serial lines or via the Ethernet LAN interface.

The I/O manages and controls all input and output functions and communicates with the SLC. It records the process cycle time and handles the constant timing of the input and output of analog and digital process signals.

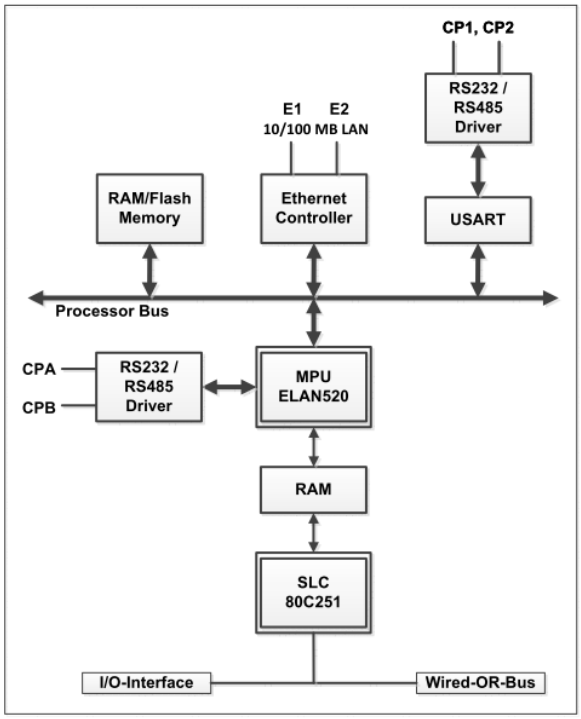

Figure 1: Function block diagram CMU of the 560CID11

The control unit stores configuration files in a removable CompactFlash™ memory card. Thus the 560CID11 has valid configuration data ready after power on and a short initialization period.

The control unit stores configuration files power fail save in a removable Compact Flash memory card. That allows the 560CID11 to have valid configuration data after power on and 560CID11 will be available again after a short initialization.

The serial communication interfaces

- Communication Port ‘CPA’
- Communication Port ‘CPB’
- Communication Port ‘CP1’
- Communication Port ‘CP2’

are designed for RS232C and RS485 standard and can be parameterized by software.

The interfaces ‘E1’ and ‘E2’ are based for the Ethernet standard 10BaseT/100BaseT.

The connectors of the serial and Ethernet communication interfaces are provided as RJ45 jacks integrated in the board's front plate.

The 560CID11 serial peripheral bus (Wired-OR-Bus) is connected via 20-pole pluggable connector.

560CID11 indicates operational and error states by light emitting diodes on the front plate. The exact definition for the LED has to be taken from the functional description of the RTU560 releases.

Label	LED	Function
ERR	(1x) red	Error / Warning
Tx	(4x) green	Transmit data, communication ports 1, 2, A, B
Rx	(4x) green	Receive data, communication ports 1, 2, A, B
Act	(2x) green	Ethernet activity
Lnk	(2x) yellow	Ethernet link
IO-Bus	(1x) green	Wired-OR-Bus activity
PF	(1x) red	One of the output voltage is fail
RUN	(1x) green	The CMU is reachable via Ethernet
RUN	(1x) yellow	Firmware is running but not reachable via Ethernet
RUN	OFF	No firmware is running
Def. IP-Addr	(1x) red	The default IP-address is active
BI	(16x) yellow	Binary input is ‘logic 1’
BO	(8x) yellow	Binary output is active

Table 1: Description of the LEDs

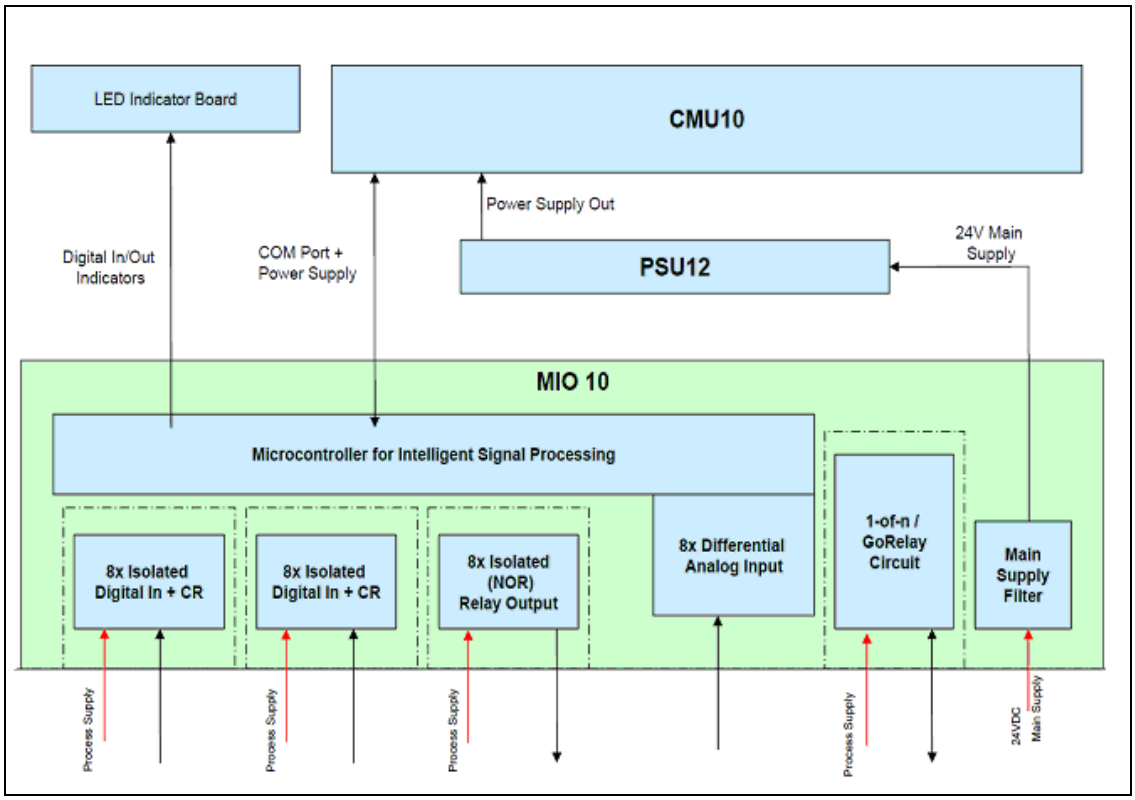

Figure 2: Block diagram 560CID11

The microcontroller of the MIO10 unit handles all timing relevant tasks of the functions that are defined by the processing parameters.

Besides this, the µC manages all communication activities of the RTU560-System. All configuration and processing parameters are loaded via the RTU system bus during the initialization.

Also during the initialization, the 560CID11 performs several tests. If an error is detected, it is reported to the central station.

The I/O functionality consists of several sub functions:

- 8 analog input channels for measurement of current in the range of 2mA up to 40mA (bipolar) und voltages from 2V up to 20V (bipolar). All channels are differential inputs. The selection between voltage and current measurement and ranges is made by DIP-Switches. (2 per channel).
- 16 galvanic isolated digital inputs for capturing of digital signals are arranged in 2 groups of 8. All inputs are protected against over-voltage and reverse-voltage conditions. The voltage range is 0V to 60VDC for R0001 (protection up to 72VDC) and 0 to 110/125 VDC for R0002 (protection up to 153VDC). The high signal input current is limited to 2mA (R0001) and 1.2mA (R0002).
- 8 galvanic isolated digital outputs by relay NO contacts are use to switch loads up to 8A and up to 250VDC. A release of an output command is done by test of the supply voltage of the relay.
- Galvanic isolated 1-of-n test interface for measurement of Relay coil resistance in the process circuit (100 Ohm up to 10.000 Ohm). Switching between testing and process by controllable GO- and MEAS outputs.
- Galvanic isolated supervision input for process voltages of 24/48/60VDC (R0001) or 110V/125VDC (R0002).
- Isolated NC relay contact to signal an Alarm or FAIL condition to other units.
- Battery supply supervision available at connector X6. This input can differentiate between several states like battery OK, AC Power fail, cable broken or battery low.

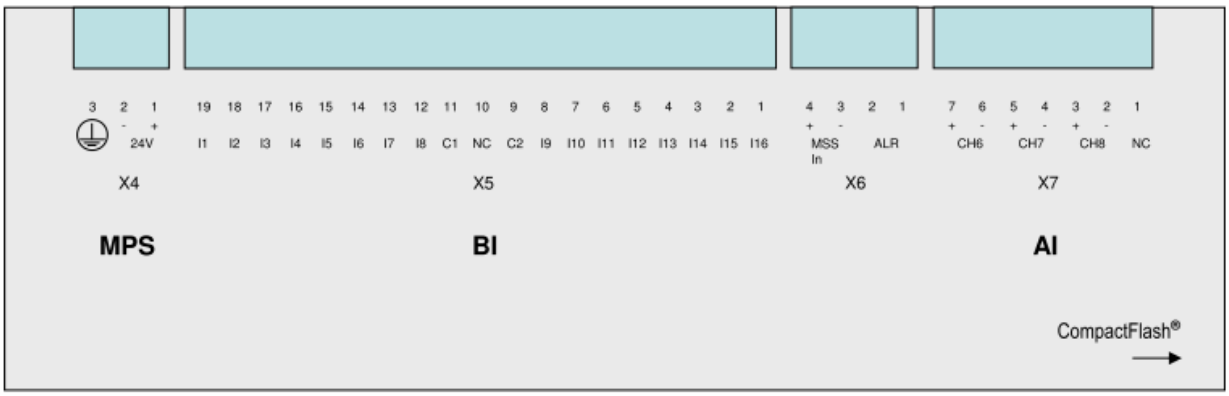

Figure 3: Top side of 560CID11 housing

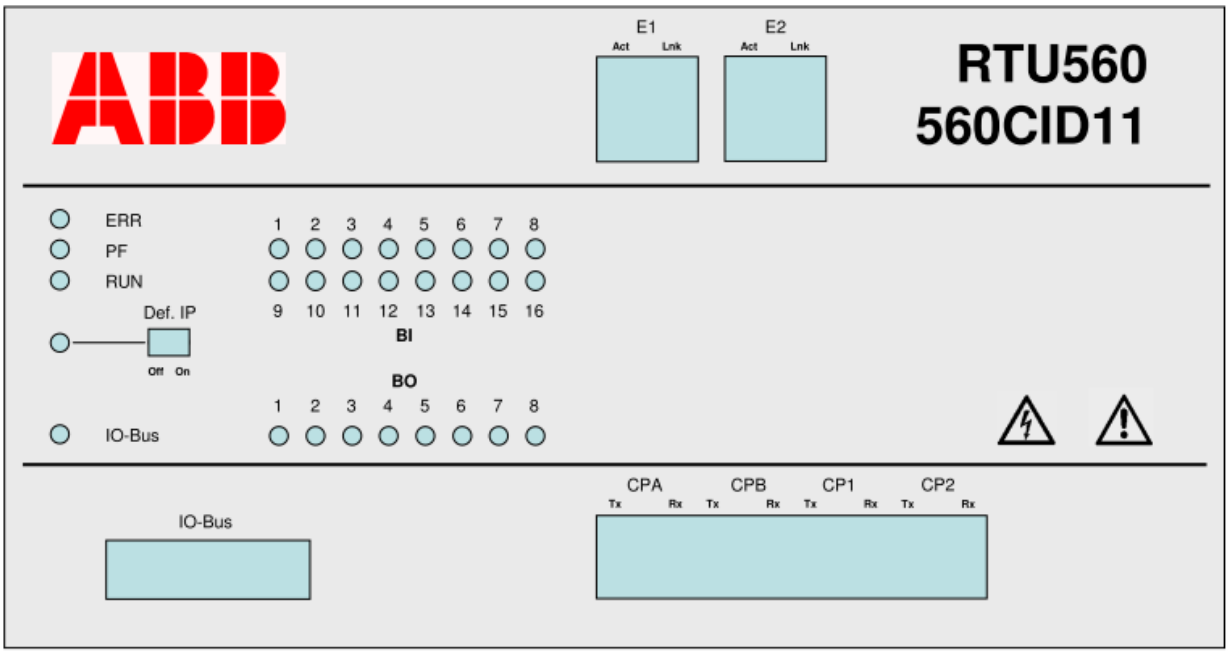

Figure 4: Front side of 560CID11 housing

Figure 5: Bottom side of 560CID11 housing

Multi I/O unit

The I/O unit MIO10 will be characterized by these main functions blocks:

- 8 analog inputs
- 16 binary inputs
- 8 binary outputs

According to the process voltage the 560CID11 is available in two versions:

- R0001 24 ... 60VDC
- R0002 110 … 125VDC

Analog input unit

It records up to 8 analog measured values. It allows connecting all typical measured value ranges.

It can be configured for the following measurement ranges by simple DIL-Switches:

- 0 .. 2mA (unipolar), ±2mA (bipolar)
- 0 .. 5mA, ±5mA
- 0 .. 10mA, ±10mA
- 0 .. 20mA, ±20mA
- 0 .. 40mA, ±40mA
- 0 .. 2VDC, ±2VDC
- 0 .. 20VDC, ±10VDC

Other effective ranges and live zero signals become generated out of these ranges through conversion on the CMU.

Characteristics

Unipolar and bipolar values are resolved by 4096 steps (12 Bit + sign) for 100% of the measurement signal.

The differential inputs are protected against static and dynamic over-voltages by a protection circuit. A low-pass filter suppresses non line frequency AC disturbance.

The AD converter, operating with sigma-delta method, scans with a higher resolution and has additional algorithms for a high suppression of line frequency and line harmonics interference voltages. Even for a deviation of ±10% of the line frequency there is still given a suppression of >45 dB. The internal high resolution allows it to scan all measurement ranges with the same resolution on one board.

The 8 differential inputs are not potentially isolated against the RTU560 power supply.

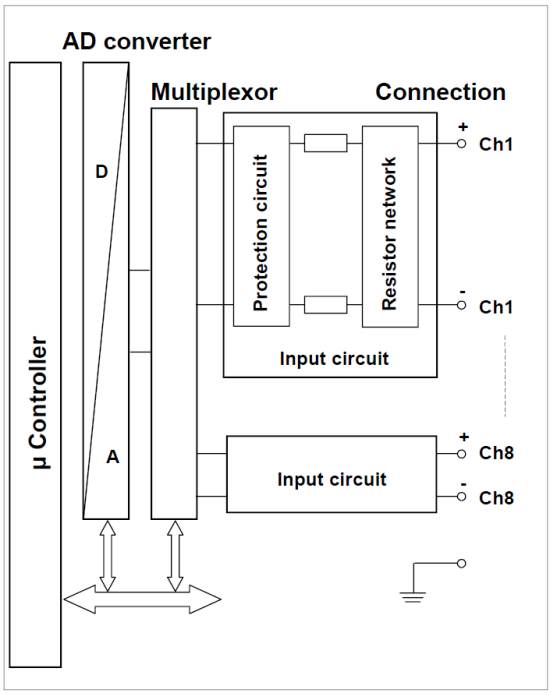

Figure 6: Block diagram Analog Input

The analog input unit can carry out the following processing functions on the measured values:

- Zero point monitoring
- Switch-over recognition
- Smoothing
- Threshold value monitoring on absolute value or with accumulation and periodic background transmission.
- Fast scan 100ms on max. 2 inputs incl. line frequency suppression (50/60Hz) or with 200ms at 16 2/3 Hz.

The measuring range is easy to configure by SW switch functions.

The micro controller needs these configurations to setup the AD-converter.

Line frequency [Hz]	Conversion period per channel [ms]	Scan cycle per unit [ms]
60	50	400
50	60	480
16,66	180	1440

The microcontroller controls the A/D converter and executes all of the processing functions of the configured measured values within the conversion time. Furthermore the µC is responsible for inter-

active communication with the RTU560 system bus. All configuration characteristics and processing parameters are downloaded from CMU via the RTU system bus.

Binary output unit

The binary output unit is used to output up to 8 binary process signals. These signals are electrically isolated by a Relay contact. The assignment of an output for a sequence of processing functions can be done according to the rules of configuration. Following commands are available:

- Switching with 1 pole or 2 pole output without (1-of-n)-Test.
- Switching with 1.5 pole or 2 pole output with (1-of-n)-Test.
- Nominal value switch command
- Bit string commands 1, 2 or 8 Bit

Characteristics

The binary output is made by Relay contacts (NO). Resistive loads can be switched, up to a defined maximum value of switching voltage (see technical part BO). If using relay as load in the process circuit a free-wheeling diode shall be used.

All eight outputs are fully galvanic isolated to each other. The control of devices can be made with help of the internal CS (1-of-n-Test) or can be switched direct.

The PPS part is used for the (1-of-n)-test of the output. The 1.5 pole command is only possible together with PPS.

For the 2 pole commands two outputs are needed.

In case of 1.5 pole output only one relay contact is switched. The process voltage is enabled by the PPS.

The binary output is able to handle following processing functions for the signal types:

- Control of time of output commands

Before and after an output the binary output unit makes several tests. These tests guarantee a high reliability of output commands, when using the PPS than even higher:

- (m-of-n)-test of outputs
- Supervision of output bits by read-back
- Supervision of the output relay voltage (24VDC) before and after a output command
- Supervision of output timing

If a failure occurs the output command will be cancelled. The physical activation of an output command is only allowed if the test reports a PASS.

1-of-n test unit

The 1-of-n unit should be configured if the output circuit of an object command has to be checked before the actual command is given. It executes a 1 out of n check which checks that only one interposing relay is activated in the output circuit. This is feasible only if all interposing relays connected to one check circuit have the same resistance value, which can be set by parameters in the RTUtil560.

The essential additional tasks are:

- Galvanic isolation of the check circuit
- Suppression of line frequency during measuring

Characteristics

In the 1 out of n-check, the unit measures the resistance value in the output circuit and compares this value with the configured upper and lower limit values.

If the resistance value is within the limits, the selected interposing relay can be activated. The object command is acknowledged positively.

If the measured resistance value is outside the tolerance limits, the 560CID11 blocks the output and indicates the error to the CMU.

The limits of the coil resistance for the interposing relay can be adjusted in steps of 10 Ω in the range of 100 Ω to 10 000 Ω by means of parameters. Line frequency ripple voltages will be filtered with high suppression by the measurement unit.

To ensure correct output the 560CID11 carries out several monitoring functions before and during command output:

- Monitoring of output duration and reset in case of fault
- Monitoring of switching voltage before and during the command output

The 560CID11 is responsible for interactive communication with the RTU system bus. All configuration characteristics and processing parameters are downloaded from the internal communication unit. While initialization the 560CID11 runs a self-diagnostic. If error is detected it reports this to the RTU-System.

Binary input unit

The binary input unit is used for the isolated input of up to 16 binary process signals. Scanning and processing of the inputs are executed with the high time resolution of 1ms. Allocation of an input to a processing function can be done according to the rules of configuration. The unit can process the following types of signals:

- 16 single indications with time stamp
- 8 double indications with time stamp
- 2 digital measured values with 8 bit
- 1 digital measured value with 16 bit
- 16 pulse counters (max. 120 Hz)
- 1 high speed counter (max. 16 KHz)

Characteristics

Eight inputs each form a group with a common return. The 16 inputs form two groups. The inputs are potentially isolated by means of optocouplers. The unit allows process signal voltages from 24 to 60 VDC (R0001) or 110V/125V DC (R0002). The input circuit is dimensioned in that way, that current limiting circuit keep the signal current constant.

The board has sixteen light emitting diodes to indicate the signal-state. The LEDs are organized in two columns on the front plate. The LED follows directly the input.

The maximum permissible frequency for counter pulses is 120 Hz. The input BI1 can be used up to 16KHz (at 50% Duty-Cycle).

The binary input unit can execute the following processing functions for the different types of signals:

- Digital filtering to suppress contact bounce
- Suppression of technologically caused chattering signals
- Consistency check for all binary input Intermediate position suppression and monitoring for double indications
- Channels allocated to digital measured values
- Summation of increment pulses to form counter values in 31 bit counter value registers
- Relocation of count values into other relocation registers on request

The 560CID11 has a buffer which allows the temporary storage of 160 time-stamped event messages in chronological order designated for transmission to the communication unit.

Main Supply Supervision (MSS)

The monitoring function (MSS) is used to test and to supervise Battery Voltage Supply units. MSS gives the status that the Battery is in good condition and all connections and fuses are OK. In case of a Failure or in a Warning situation The 560CID11 detects this at the MSS input and generates a message. MSS input unit can detect 4 different states:

- Normal operation = High signal
- AC Failure = 0,5 Hz signal
- Battery Failure = 2,0 Hz signal
- Wiring or Fuse Failure = Low signal

If this MSS functionality is configured then the 560CID11 will report a Warning or Alarm situation to the central station. In addition the 560CID11 can switch the ALARM-output (X6) in case of any error.

Alarm Output (ALR)

If an error condition occurs in the RTU the ALR-output will be switched. RTU error conditions have to be taken from the function description of the RTU560 releases.

Technical Data

In addition to the RTU560 general technical data, the following applies:

Main Processing Unit MPU

Microprocessor:	ELAN520 @ 133 MHz (incorporating an Intel 586™ class 32 bit processor)
RAM:	64 MByte
Flash Memory:	128 MByte (CompactFlash)

Serial Line Controller SLC

Controller Type:	80C251
RAM:	32 kByte
Dual Ported RAM:	16 kByte

Serial Interfaces ‘1’ and ‘2’

Physical Interfaces:	RS232C / RS485 selectable by software
Bit rate:	≤ 38 400 bit/s
Signal lines RS232C:	GND E2/102 TxD D1/103 RxD D2/104 RTS S2/105 CTS M2/106 DTR S1.2/108 DCD M5/109

Serial Interface ‘A’ and ‘B’

Physical Interface:	RS485 / RS232C selectable by software
Bit rate:	≤ 19 200 bit/s
Signal lines RS485:	G Signal ground A Receive/Transmit B Receive/Transmit

Ethernet LAN Interface ‘E1’ and ‘E2’

Physical Interface:	10BaseT/100BaseT
Bit rate:	10/100 MBit/s

Power consumption of the 560CID11

24VDC (without I/O Interface operating)	300mA

DC Input/ MPS (Main Power Supply)

Voltage:	24 VDC
Tolerance Range	-20 … +20 %
Max. Current	2 A @ 24 VDC
Starting Current:	< 10 A, 1.5 ms (Class S1) according IEC 60870-4
Efficiency:	88 % @ 24 VDC
Reverse voltage protec-tion	yes

Internal Output 1

Voltage:	5 VDC
Tolerance:	± 5 %
Current min.:	0 A
Current max.:	1 A
Residual Ripple	≤ 100 mV_{ss}

Internal Output 2

Voltage:	± 15 VDC
Tolerance:	± 5 %
Current min.:	0 A
Current max.:	0,5 A
Residual Ripple	≤ 200 mV_{ss}

Internal Output 3

Voltage:	18 VDC
Tolerance:	± 5 %
Current min.:	0 A
Current max.:	1 A
Residual Ripple	≤ 200 mV_{ss}

Input/Output Multi- IO

AI (Analog Input)

Voltage	0-2V (+/-2V bipolar) 0-20V(+/-10V bipolar)
Input impedance	> 100kOhm
Current Range 1	0-2mA (+/-2mA bipolar) 0-5mA (+/-5mA bipolar) 0-10mA (+/-10mA bipolar)
Shunt-Impedance	150 Ohm
Current Range 2	0-20mA (+/-20mA bipolar) 0-40mA (+/-40mA bipolar) 4-20mA
Shunt-Impedance	50 Ohm
Resolution	12 bit + VZ
Common mode voltage	+/- 8VDC
Error on delivery	≤ 0,1% at 25°C
Temperature drift	≤ 100ppm/K (0 .. 70°C)
Linearity	≤ 0,1%
Line frequency	50Hz, 60Hz, 16 2/3 Hz
Line frequency interference suppression	> 100 dB

BI (Binary Input R0001)

Voltage	24 / 48 / 60VDC (+/-20%) ≥ 18V = Logic 1 ≤ 9V = Logic 0
Input current	2mA constant
Over-voltage protection	Max. 72VDC
Reverse voltage protection	yes
Max. input signal frequency	120Hz Channel 1 up to 16KHz
Signalisation	LED (yellow), per input

BI (Binary Input R0002)

Voltage	110 / 125VDC (+/-20%) ≥ 80V = Logic 1 ≤ 45V = Logic 0
Input current	1,2mA constant
Over-voltage protection	Max. 152VDC
Reverse voltage protection	yes
Max. input signal frequency	120Hz Channel 1 up to 16KHz
Signalisation	LED (yellow), per input

BO (Binary Output)

Relay contact	NO, isolated
Max. contact current	8 A
Max. contact voltage	250VDC
Max. switching power	120W resistive 50W at L/R=40ms
Signalisation	LED (yellow), per input

ALR (Alarm Output)

Alarm (ALR) Relay contact	NC, isolated
Max. contact current	8 A
Max. contact voltage	250VDC
Max. switching power	120W resistive 50W at L/R=40ms

MSS (Main Supply Supervision)

MSS Digital Input	24V, 48V, 60VDC ≥ 18V = Logic 1 ≤ 9V = Logic 0
Input current	2mA constant
Over-voltage protection	72VDC
Reverse voltage protection	yes

PPS (Process Power Supervision)

Process voltage input PS (I/O)	24 /48 / 60VDC (R0001) 110 / 125VDC (R0002)
GO Relay (GR)	Coil voltage: 24VDC, max. 0,1A
Meas Relay (MR)	Coil voltage: 24VDC, max. 0,1A
Input current	2mA constant
Over-voltage protection	Max .72VDC (R0001) Max. 152VDC (R0002)
Reverse voltage protec-tion	yes

Mechanical Layout

Metal case	204 x 105 mm
Height	90 mm
Weight	approx.. 1,3 kg

Connector types

Power Supply	3 pole pluggable screw terminals
IO-Interface Wired-OR-Interface	1 x 20-pole pluggable connectors
Ethernet Interface E1, E2	RJ45 jack, 8 pole
Serial Interface CP1, CP2, CPA, CPB	RJ45 jack, 8 pole
Binary Input	19 pole pluggable screw terminals
Binary Output	16 pole pluggable screw terminals
1-of-N Interface	7 pole pluggable screw terminals
Analog Input	11 and 7 pole pluggable screw terminals
MSS / Alarm	4 pole pluggable screw terminals

Electromagnetic Compatibility

EN61000-4-2 Electrostatic Discharge Immunity	8KV Air 6KV direct Performance criteria A
EN61000-4-3 Radiated RF Field	10V/m Performance criteria A
EN61000-4-4 Fast Transient Immunity (Burst)	2KV/4KV Performance criteria A
EN61000-4-5 Surge Immunity	2KV/4KV Performance criteria A
EN61000-4-6 Conducted RF Field	10V Performance criteria A
EN55011 RF Emissions air	30MHz up to 1GHz class A (Industry)
EN55011 RF Emissions cable	0,01MHz up to 30 MHz class A (Industry)

Environmental Compatibility

EN60068-2-2 Continuous Test	70°C 96h fully active loaded
EN60068-2-1 Continuous Test	-25°C 96h fully active loaded
EN60068-2- 1 Start up Test	-40°C System starts on -40°C
EN60068-2-14 Continuous Test	0°C /70°C Temperature cycles 48h, fully active loaded
EN60068-2-30 Continuous Test	70°C/95% rel. Humidity Storage, not active
IEC60255-21-3 Seismic Test	Class 1
IEC60255-21-1 Vibration Test	Class 1
IEC60870-2-2 Vibration durance test	Class Bm
IEC60255-21-2 Shock Test	15g, Class 1
IEC60870-2-1 Shock Test	25g, Class 1
IEC60255-21-2 Bump Test	10g, Class 1

Electrical Safety

EN60950-1 Safety class 1	Electrical Safety investigation Flammability investigation
EN60255-5 Impulse test	5KV SELV – Process 1KV Process - Process
EN60255-5 Dielectrical Test	2,5KVac SELV – Process 1KVac Process - Process
EN60255-5 Isolation	>100MOhm@500VDC SELV – Process Process - Process

Environmental conditions

Temperature	-40 °C start up -25 °C … +70 °C operation -40 °C … +85 °C storage
IP class	IP 30
Relative Humidity	5 … 95 % (non condensing)
Mounting	Fixed at a DIN- rail max. 5000m a.S.L. no aggressive gases

Ordering information

560CID11 R0001	1KGT 030400 R0001
560CID11 R0002	1KGT 030400 R0002

Note:
We reserve the right to make technical changes or modify the contents of this document without prior notice With regard to purchase orders, the agreed particulars shall prevail. ABB AG does not accept any responsibility whatsoever for potential errors or possible lack of information in this document.

We reserve all rights in this document and in the subject matter and illustrations contained therein. Any reproduction, disclosure to third parties or utilization of its contents - in whole or in parts –is forbidden without prior written consent of ABB AG.

Copyright© 2012 ABB
All rights reserved