Outdoor Instrument Transformers

Buyer's Guide

Table of Contents

		Chapter - Page
Products	**Introduction**	A - 2
	Explanations	B - 1
	Silicone Rubber (SIR) Insulators	C - 1
	Design Features and Advantages	
	Current Transformers IMB	D - 1
	Inductive Voltage Transformer EMF	E - 1
	Capacitor Voltage Transformer CPA/CPB	F - 1
Technical Information	**Technical Catalogues**	
	CT IMB	G - 1
	VT EMF	H - 1
	CVT CPA/CPB (IEC)	I - 1
	CVT CPA/CPB (ANSI)	J - 1
	Optional	
	Cable Entry Kits - Roxtec CF 16	K - 1
	Quality Control and Testing	L - 1
	Inquiry and Ordering Data	M - 1

Day after day, all year around— with ABB Instrument Transformers

ABB has been producing instrument transformers for more than 60 years. Thousands of our products perform vital functions in electric power networks around the world – day after day, all year round.
Their main applications include revenue metering, control, indication and relay protection.

All instrument transformers supplied by ABB are tailor-made to meet the needs of our customers.
An instrument transformer must be capable of withstanding very high stresses in all climatic conditions. We design and manufacture our products for a service life of at least 30 years. Actually, most last even longer.

Product range	Type	Highest Voltage for Equipment (kV)
Current Transformer IMB		
Hairpin/Tank type Paper, mineral oil insulation, quartz filling	IMB 36 - 800	36 - 765
Inductive Voltage Transformer EMF		
Paper, mineral oil insulation, quartz filling	EMF 52 - 170	52 - 170
Capacitor Voltage Transformer CP		
CVD: Mixed dielectric polypropylene-film and synthetic oil. EMU: Paper, mineral oil	CP 72 - 800	72.5 - 765
Coupling Capacitors CCA or CCB		
Intended for power line carrier applications (identical to CVD above but without intermediate voltage terminal.)	CCA (high capacitance) 72 - 800	72.5 - 765
	CCB (extra high capacitance) 145 - 800	145 - 765

We are flexible and tailor each instrument transformer the needs of our customers. Sizes other than those mentioned above can be supplied upon request.

Technical Specifications – General

Standard/Customer specification	There are international and national standards, as well as customer specifications. ABB High Voltage Products can meet most requirements, as long as we are aware of them. When in doubt, please enclose a copy of your specifications with the inquiry.
Rated voltage	The rated voltage is the maximum voltage (phase-phase), expressed in kV rms, of the system for which the equipment is intended. It is also known as maximum system voltage.
Rated insulation level	The combination of voltage values which characterizes the insulation of an instrument transformer with regard to its capability to withstand dielectric stresses. The rated value given is valid for altitudes ≤1000 m above sea level. A correction factor is introduced for higher altitudes.
Lightning impulse test	The lightning impulse test is performed with a standardized wave shape – 1.2/50 µs – for simulation of lightning overvoltage.
Rated Power Frequency Withstand Voltage	This test is to show that the apparatus can withstand the power frequency over-voltages that can occur. The Rated Power Frequency Withstand voltage indicates the required withstand voltage. The value is expressed in kV rms.
Rated SIWL	For voltages ≥300 kV the power-frequency voltage test is partly replaced by the switching impulse test. The wave shape 250/2500 µs simulates switching over-voltage. The rated Switching Impulse Withstand Level (SIWL) indicates the required withstand level phase-to-earth (phase-to-ground), between phases and across open contacts. The value is expressed in kV as a peak value.
Rated Chopped Wave Impulse Withstand voltage Phase-to-earth	The rated chopped wave impulse withstand level at 2 µs and 3 µs respectively, indicates the required withstand level phase-to-earth (phase-to-ground).
Rated frequency	The rated (power) frequency is the nominal frequency of the system expressed in Hz, which the instrument transformer is designed to operate in. Standard frequencies are 50 Hz and 60 Hz. Other frequencies, such as 16 2/3 Hz and 25 Hz might be applicable for some railway applications.
Ambient temperature	Average 24 hours ambient temperature above the standardized +35 °C influences the thermal design of the transformers and must therefore be specified.
Installation altitude	If installed >1000 m above sea level, the external dielectric strength is reduced due to the lower density of the air. Always specify the installation altitude and normal rated insulation levels. ABB will make the needed correction when an altitude higher than 1000 meters ASL is specified. Internal insulation is not affected by installation altitude and dielectric routine tests will be performed at the rated insulation levels.
Creepage distance	The creepage distance is defined as the shortest distance along the surface of an insulator between high voltage and ground. **The required creepage distance is specified by the user in:** **- mm (total creepage distance)** **- mm/kV (creepage distance in relation to the highest system voltage).**
Pollution level	Environmental conditions, with respect to pollution, are sometimes categorized in pollution levels. Four pollution levels are described in IEC 60815. There is a relation between each pollution level and a corresponding minimum nominal specific creepage distance. Pollution level — Creepage distance I - Light — 16 mm/kV II - Medium — 20 mm/kV III - Heavy — 25 mm/kV IV - Very Heavy — 31 mm/kV
Wind load	The specified wind loads for instrument transformers intended for outdoor normal conditions are based on a wind speed of 34 m/s.

Technical Specifications – Current Transformers

Currents	The rated currents are the values of primary and secondary currents on which performance is based
Rated primary current	The rated current (sometimes referred to as rated current, nominal current or rated continuous current) is the maximum continuous current the equipment is allowed to carry. The current is expressed in A rms. The maximum continuous thermal current is based on average 24 h ambient temperature of +35 °C. It should be selected about 10 - 40% higher than the estimated operating current. Closest standardized value should be chosen.
Extended current ratings	A factor that multiplied by the rated current gives the maximum continuous load current and the limit for accuracy. Standard values of extended primary current are 120, 150 and 200% of rated current. Unless otherwise specified, the rated continuous thermal current shall be the rated primary current.
Rated secondary current	The standard values are 1, 2 and 5 A. 1 A gives an overall lower burden requirement through lower cable burden.
Rated short-time thermal current (I_{th})	The rated short-time withstand current is the maximum current (expressed in kA rms) which the equipment shall be able to carry for a specified time duration. Standard values for duration are 1 or 3 s. I_{th} depends on the short-circuit power of the grid and can be calculated from the formula: $I_{th} = P_k$ (MW) / U_m (kV) x √3 kA.
Rated dynamic current (I_{dyn})	The dynamic short-time current is according to IEC, $I_{dyn} = 2.5 \times I_{th}$ and according to IEEE, $I_{dyn} = 2.7 \times I_{th}$
Reconnection	The current transformer can be designed with either primary or secondary reconnection or a combination of both to obtain more current ratios.
Primary reconnection	The ampere-turns always remain the same and thereby the load capacity (burden) remains the same. The short-circuit capacity however is reduced for the lower ratios. Primary reconnection is available for currents in relation 2:1 or 4:2:1. See pages I-5 and I-9.
Secondary reconnection	Extra secondary terminals (taps) are taken out from the secondary winding. The load capacity drops as the ampere-turns decrease on the taps, but the short-circuit capacity remains constant. Each core can be individually reconnected.
Burden and Accuracy Class (IEC)	
Burden	The external impedance in the secondary circuit in ohms at the specified power factor. It is usually expressed as the apparent power – in VA -, which is taken up at rated secondary current. It is important to determine the power consumption of connected meters and relays including the cables. Unnecessary high burdens are often specified for modern equipment. Note that the accuracy for the measuring core, according to IEC, can be outside the class limit if the actual burden is below 25% of the rated burden.
Accuracy	The accuracy class for measuring cores is according to the IEC standard given as 0.2, 0.2S, 0.5, 0.5S or 1.0 depending on the application. For protection cores the class is normally 5P or 10P. Other classes are quoted on request, e.g. class PR, PX, TPS, TPX or TPY.
Rct	The secondary winding resistance at 75 °C
Instrument Security Factor (FS)	To protect meters and instruments from being damaged by high currents, an FS factor of 5 or 10 often is specified for measuring cores. This means that the secondary current will increase a maximum of 5 or 10 times when the rated burden is connected. FS10 is normally sufficient for modern meters.
Accuracy Limit Factor (ALF)	The protection cores must be able to reproduce the fault current without being saturated. The overcurrent factor for protection cores is called ALF. ALF = 10 or 20 is commonly used. **Both FS and ALF are valid at rated burden only. If lower burden the FS anf ALF will increase**
Burden and Accuracy Class for other standards, such as ANSI, IEEE, etc.	**More detailed information about standards other than IEC can be found in our Application Guide, Outdoor Instrument Transformers, Catalog Publication 1HSM 9543 40-00en or in the actual standard.**

Technical Specifications – Voltage Transformers

Voltages	The rated voltages are the values of primary and secondary voltages on which the performance is based.
Voltage factor (Vf)	It is important that the voltage transformer, for thermal and protection reasons, can withstand and reproduce the continuous fault overvoltages that can occur in the net. The over-voltage factor is abbreviated as Vf. The IEC standard specifies a voltage factor of 1.2 continuously and simultaneously 1.5/30 sec. for systems with effective grounding with automatic fault tripping, and 1.9/8 hrs for systems with insulated neutral point without automatic ground fault systems. Accuracy, according to IEC, for measuring windings is fulfilled between 0.8 and 1.2 x rated voltage and for protection windings up to the voltage factor (1.5 or 1.9 x rated voltage).
Reconnection	The voltage transformer can be designed with secondary reconnection. Secondary reconnection means that extra secondary terminals (taps) are taken out from the secondary winding(s).
Burden and accuracy class	
Burden	The external impedance in the secondary circuit in ohms at the specified power factor. It is usually expressed as the apparent power – in VA -, which is taken up at the rated secondary voltage. (See Current Transformers above). The accuracy class for measuring windings, according to IEC, is given as 0.2, 0.5 or 1.0 depending on the application. A rated burden of around 1.3-1.5 times the connected burden will give maximum accuracy at the connected burden. For protection purposes the class is normally 3P or 6P
Simultaneous burden (IEC)	Metering windings and protection windings not connected in open delta are considered as simultaneously loaded. A protection winding connected in open delta is not considered as a simultaneous load.
Thermal limit burden	Thermal limit burden is the total power the transformer can supply without excessively high temperature rise. The transformer is engineered so that it can be loaded with the impedance corresponding to the load at rated voltage, multiplied by the square of the voltage factor. This means that at a voltage factor of 1.9/8h, for example, the limit burden = total rated burden x 1.9^2. The transformer cannot be subjected to a higher limit burden without being loaded higher than the rated burden. Consequently, because of loading considerations, it is unnecessary to specify a higher thermal limit burden.
Voltage drop	The voltage drop in an external secondary circuit (cables and fuses) can have a significantly larger influence on the ratio error than incorrect burden.
Ferro-resonance	Ferroresonance is a potential source of transient overvoltage. Three-phase, single-phase switching, blown fuses, and broken conductors can result in overvoltage when ferroresonance occurs between the magnetizing impedance of a transformer and the system capacitance of the isolated phase or phases. For example, the capacitance could be as simple as a length of cable connected to the ungrounded winding of a transformer. Another example of ferroresonance occurring is when an inductive voltage transformer is connected in parallel with a large grading capacitor across the gap of a circuit breaker. Ferroresonance is usually known as a series resonance.

Technical Specifications – Voltage Transformers

Additional for Capacitor Voltage Transformers (CVT) and Capacitor Voltage Divider (CVD)	
Capacitance phase - ground	Requirements for capacitance values can be applicable when using the CVT for communication over lines (for relay functions or remote control). PLC = Power Line Carrier. Higher capacitance => Smaller impedance for signal. Frequency ranges 50-500 kHz. The line matching unit can be adjusted to any capacitance. **The lower applied frequency decide the minimum capacitance of coupling capacitor.**
More information regarding instrument transformers	More detailed information about instrument transformers can be found in our **Application Guide, Outdoor Instrument Transformers. Catalog Publication 1HSM 9543 40-00en**

Silicone Rubber as an Insulator

Wide range of instrument transformers with silicone rubber (SIR) insulators

ABB AB, High Voltage Products can supply most of our instrument transformers with patented helical extrusion-moulded silicone rubber insulation.

CT IMB 36-800 kV
VT EMF 52-170 kV
CVT CPA/CPB 72-800 kV

Why Silicone Rubber Insulators?

Ceramic (porcelain) insulators have performed well for several decades, but one of the disadvantages with porcelain is its fragility.

Listed below are some of the advantages of silicone rubber insulators compared to porcelain:

- Non-brittle
- Minimum risk for handling and transport damages
- Minimum risk for vandalism
- Light-weight
- Explosion safety
- Excellent pollution performance
- Minimum maintenance in polluted areas
- Hydrophobic

There are several polymeric insulator materials available, of which silicone has proven to be superior

Comparison of Polymeric Insulators

	Epoxy	EP-rubber	Silicone
Brittle	Low	Excellent	Excellent
Insulation	Fair	Good	Excellent
Weight	Good	Excellent	Excellent
Mech. strength	Excellent	Good	Excellent
Safety	Good	Good	Excellent
Earthquake	Good	Excellent	Excellent
Handling	Good	Excellent	Excellent
Maintenance	Fair	Fair	Excellent
Ageing	Fair	Good	Excellent
UV-resistance	Good	Good	Excellent

Experience of Material

ABB has used silicone rubber (SIR) insulators since 1985, starting with surge arresters, and has gained considerable experience.

ABB Manufacturing Technique

The patented helical extrusion moulded silicone rubber insulators without joints (chemical bounds between spirals) minimizes electrical field concentrations and reduces build-up of contamination. The cross-laminated fiberglass tube inside the insulator provides high mechanical strength.

Completed Tests

The silicone material used for ABB AB, High Voltage Products, Instrument Transformers is approved according to IEC and ANSI/IEEE standards.

Tests performed:

- Accelerated ageing test (1,000 h)
- Lightning impulse test, wet power frequency test and wet switching impulse test
- Short circuit test
- Temperature rise test

Color

The (SIR) insulators for the instrument transformers are supplied in a light gray color.

Deliveries

ABB in Ludvika has supplied instrument transformers with (SIR) insulators for the most severe conditions, from marine climate to desert and/or polluted industrial areas.

A reference list can be provided on request.

More Information

For additional information please refer to publication 1HSM 9543 01-06en.

Customer´s Notes

IMB Design Features and Advantages

ABB's oil minimum current transformers type IMB is based on a hairpin design (shape of the primary conductor) also known as tank type. The basic design has been used by ABB for 60 years, with more than 160,000 units delivered.

The design corresponds with the demands of both the IEC and IEEE standards. Special design solutions to meet other standards and/or specifications are also available.

The unique filling with quartz grains saturated in oil gives a resistant insulation in a compact design where the quantity of oil is kept to a minimum

The IMB transformer has a very flexible design that, for example, allows large and/or many cores.

Primary Winding

The primary winding consists of one or more parallel conductor of aluminum or copper designed as a U-shaped bushing with voltage grading capacitor layers.
The insulation technique is automated to give a simple and controlled wrapping, which improves quality and minimizes variations.

The conductor is insulated with a special paper with high mechanical and dielectric strength, low dielectric losses and good resistance to ageing.

This design is also very suitable for primary windings with many primary turns. This is used when the primary current is low, for instance unbalance protection in capacitor banks. (Ex. ratio 5/5A)

Cores and Secondary Windings

The IMB type current transformers are flexible and can normally accommodate any core configuration required.

Cores for metering purposes are usually made of nickel alloy, which features low losses (= high accuracy) and low saturation levels.

The protection cores are made of high-grade oriented steel strip. Protection cores with air gaps can be supplied for special applications.

The secondary winding consists of double enameled copper wire, evenly distributed around the whole periphery of the core. The leakage reactance in the winding and also between extra tapping is therefore negligible.

Impregnation

Heating in a vacuum dries the windings. After assembly all free space in the transformer (app. 60%) is filled with clean and dry quartz grain. The assembled transformer is vacuum-treated and impregnated with degassed mineral oil. The transformer is always delivered oil-filled and hermetically sealed.

Tank and Insulator

The lower section of the transformer consists of an aluminum tank in which the secondary windings and cores are mounted. The insulator, mounted above the transformer tank, consists as standard of high-grade brown-glazed porcelain. Designs using light gray porcelain or silicon rubber can be quoted on request.

The sealing system consists of O-ring gaskets.

Expansion System

The IMB has an expansion vessel placed on top of the insulator. A hermetically sealed expansion system, with a nitrogen cushion compressed by thermal expansion of the oil, is used in the IMB as the standard design. An expansion system with stainless steel expansion bellows can be quoted on request.

On Request – Capacitive Voltage Tap

The capacitive layers in the high voltage insulation can be utilized as a capacitive voltage divider. A tap is brought out from the second to last capacitor layer through a bushing on the transformer tank (in the terminal box or in a separate box, depending on the IMB tank design). An advantage of the capacitive terminal is that it can be used for checking the condition of the insulation through dielectric loss angle (tan delta) measurement without disconnecting the primary terminals. The tap can also be used for voltage indication, synchronizing or similar purpose, but the output is limited by the low capacitance of the layers.

The load connected must be less than 10 kohms and the tap must be grounded when not in use.

IMB Design Features and Advantages

Climate
The transformers are designed for, and are installed in, widely shifting conditions, from polar to desert climates all over the world.

Service Life
The IMB transformer is hermetically sealed and the low and even voltage stress in the primary insulation gives a reliable product with expected service life of more than 30 years. The IMB and its predecessors have since the 1930s been supplied in more than 160,000 units.

Expansion System
The expansion system, with a nitrogen gas cushion, increases operating reliability and minimizes the need of maintenance and inspections. This type of expansion system can be used in the IMB since the quartz filling reduces the oil volume and a relatively large gas volume minimizes pressure variations.

For higher rated currents an expansion vessel with external cooling fins is used to increase the cooling area and heat dissipation to the surrounding air.

An expansion system with stainless steel expansion bellows surrounded by the oil can be quoted on request.

Quartz Filling
Minimizes the quantity of oil and provides a mechanical support for the cores and primary winding during transport and in the event of a short-circuit.

Flexibility
The IMB covers a wide range of primary currents up to 4,000 A. It can easily be adapted for large and/or many cores by increasing the volume of the tank.

Resistance to Corrosion
The selected aluminum alloys give a high degree of resistance to corrosion, without the need of extra protection. Anodized parts for IMB 36-170 kV can be offered on request. For use in extreme environments IMB >170 kV can be delivered with a protective painting.

Seismic Strength
The IMB has a mechanically robust construction, designed to withstand high demands of seismic acceleration without the need of dampers.

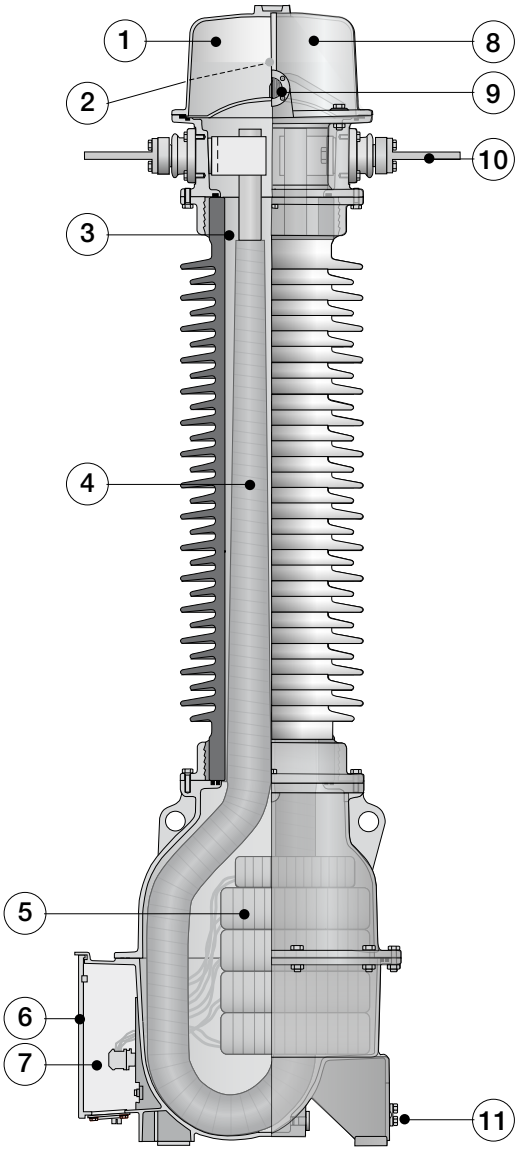

Current Transformer Type IMB

1. Gas cushion
2. Oil filling unit (hidden)
3. Quartz filling
4. Paper-insulated primary conductor
5. Cores/secondary windings
6. Secondary terminal box
7. Capacitive voltage tap (on request)
8. Expansion vessel
9. Oil sight glass
10. Primary terminal
11. Ground terminal

EMF Design Features and Advantages

ABB's inductive voltage transformers are intended for connection between phase and ground in networks with insulated or direct-grounded neutral points.

The design corresponds with the requirements in the IEC and IEEE standards. Special design solutions to meet other standards and customer requirements are also possible.

The transformers are designed with a low flux density in the core and can often be dimensioned for 190% of the rated voltage for more than 8 hours.

Primary Windings

The primary winding is designed as a multilayer coil of double enameled wire with layer insulation of special paper. Both ends of the windings are connected to metal shields.

Secondary and Tertiary Windings

In its standard design the transformer has a secondary measurement winding and a tertiary winding for ground fault protection, but other configurations are available as required. (2 secondary windings in a design according to IEEE standard)

The windings are designed with double enameled wire and are insulated from the core and the primary winding with pressboard (presspahn) and paper.

The windings can be equipped with additional terminals for other ratios (taps).

Core

The transformer has a core of carefully selected material, to give a flat magnetization curve. The core is over-dimensioned with a very low flux at operating voltage.

Impregnation

Heating in a vacuum dries the windings. After assembly, all free space in the transformer (approximately 60%) is filled with clean and dry quartz grains. The assembled transformer is vacuum-treated and impregnated with degassed mineral oil. The transformer is always delivered oil-filled and hermetically sealed.

Tank and Insulator

EMF 52-170: The lower section of the transformer consists of an aluminum tank in which the winding and core are placed. The tank consists of selected aluminum alloys that give a high degree of resistance to corrosion, without the need of extra protection. Anodized details can be offered on request. The sealing system consists of O-ring gaskets.

The insulator, in its standard design, consists of high quality, brown glazed porcelain. The voltage transformers can also be supplied with silicone rubber insulators.

Expansion System

The EMF has an expansion vessel placed on the top section of the porcelain. The EMF has a closed expansion system, without moving parts and with a nitrogen cushion, that is compressed by the expansion of the oil. A prerequisite for this is that the quartz sand filling reduces the oil volume, and the use of a relatively large gas volume, which gives small pressure variations in the system.

Ferro-Resonance

The design of the EMF notably counteracts the occurrence of ferro-resonance phenomena:

- The low flux in the core at the operating voltage gives a large safety margin against saturation if ferro-resonance oscillations should occur.
- The flat magnetization curve gives a smooth increase of core losses, which results in an effective attenuation of the ferro-resonance.

If the EMF transformer will be installed in a network with a high risk for ferro-resonance, it can, as a further safety precaution, be equipped with an extra damping burden, on a delta connected tertiary winding. See the figure below.

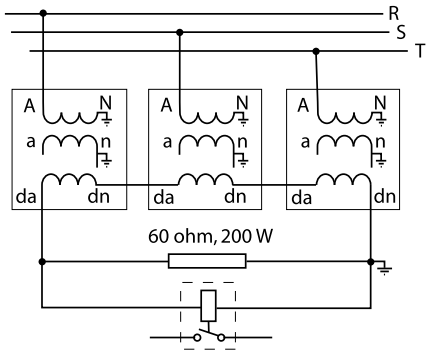

Damping of ferro-resonance

EMF Design Features and Advantages

Climate
These transformers are designed for, and are installed in a wide range of shifting conditions, from polar to desert climates all over the world.

Service Life
The low and even voltage stresses in the primary winding give a reliable product with a long service life. EMF and its predecessors have been supplied in more than 55,000 units since the 1940s.

Expansion System
The expansion system based on the nitrogen cushion gives superior operating reliability and minimizes the need of maintenance and inspection of the transformer.

Quartz Filling
Minimizes the quantity of oil and provides a mechanical support to the cores and primary winding.

Resistance to Corrosion
EMF 52-170: The selected aluminum alloys give a high degree of resistance to corrosion without the need of extra protection. Anodized details can be offered on request.

Seismic Strength
EMF is designed to withstand the high demands of seismic acceleration.

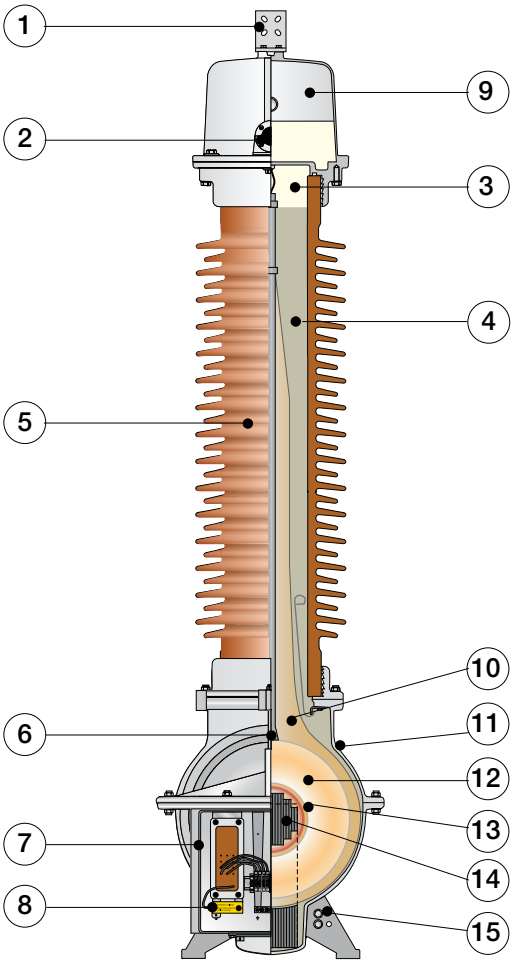

Voltage transformer EMF 145

1. Primary terminal
2. Oil level sight glass
3. Oil
4. Quartz filling
5. Insulator
6. Lifting lug
7. Secondary terminal box
8. Neutral end terminal
9. Expansion system
10. Paper insulation
11. Tank
12. Primary winding
13. Secondary windings
14. Core
15. Ground connection

CPA and CPB Design Features

ABB's capacitor voltage transformers (CVTs) and coupling capacitors are intended for connection between phase and ground in networks with isolated or grounded neutral.

ABB offers a world-class CVT with superior ferro-resonance suppression and transient response.

The design corresponds to the requirements of IEC and ANSI and all national standards based on them. Special designs to meet other standards and customer specifications are also available.

Due to the design of the capacitor elements, described below, CPA and CPB are, with regard to temperature stability and accuracy, equivalent to inductive voltage transformers.

Difference and Composition of CPA and CPB

A capacitor voltage transformer with an electromagnetic unit (EMU), type EOA is called CPA and with EMU, type EOB is called CPB. The design of the EOA and EOB is basically identical, however the EOB has a larger tank and core, with space for larger windings, making it capable of withstanding higher burdens.

Our standard voltage divider, type designation CSA (high capacitance) or CSB (extra high capacitance) is mounted on an electromagnetic unit (EMU), making a complete capacitor voltage transformer.

A coupling capacitor (without an EMU) is called CCA (high capacitance) or CCB (extra high capacitance).

Capacitor Voltage Divider

The capacitor voltage divider (CVD) consists of one or two capacitor units, assembled on top of each other. Each unit contains a large number of series-connected, oil-insulated capacitor elements. The units are completely filled with synthetic oil, which is kept under a slight overpressure by the design of the expansion system. O-ring seals are used throughout the design.

The capacitor elements are designed with respect to the demands made by revenue metering, and their active component consists of aluminum foil, insulated with paper/polypropylene film, impregnated by a PCB-free synthetic oil, which has better insulating properties than normal mineral oil and is required for the mixed dielectric. Due to its unique proportions between paper and polypropylene film, this dielectric has proven itself virtually insensitive to temperature changes.

Electromagnetic Unit

The voltage divider and the electromagnetic unit are connected by internal bushings, which is necessary for applications with high accuracy.

The EMU has double-enameled copper windings and an iron core made of high quality steel sheet and is oil insulated in a hermetically sealed aluminum tank with mineral oil.

The primary coil is divided into a main winding, and a set of externally connected trimming windings. The nominal intermediate voltage is approx. $22/\sqrt{3}$ kV.

The EOA and EOB have a reactor, which is connected in series between the voltage divider and the high voltage end of the primary winding. This reactor compensates for the shift in phase angle caused by the capacitive voltage divider. The inductive reactances are tuned individually on each transformer before accuracy testing.

For special applications, HVDC stations, metering of harmonics, etc. there is another type of EMU available, the EOAL. The EOAL is basically an EOA but without a separate compensating reactor. In the EOAL, the compensating reactor and transformer is combined into one piece, which gives several advantages.

The useful frequency range is wider since the internal resonance frequency of the EMU is higher than for an EOA or EOB. The already excellent transient response of the EOA and EOB is improved even further. However the EOAL is limited to burdens lower than the EOA.

CPA and CPB Design Features

Climate
These transformers are designed for, and are installed in widely varying conditions, from arctic to desert climates, on every continent.

Ferro-resonance
The low induction, combined with an efficient damping circuit, gives a safe and stable damping of ferro-resonance at all frequencies and voltages up to the rated voltage factor; see page I-2 or J-2.

Life Time
The low voltage stress within the capacitor elements ensures a safe product with an expected service life of more than 30 years.

Transient Properties
The high intermediate voltage and high capacitance result in good transient properties.

Adjustment
The adjustment windings for ratio adjustment are accessible in the terminal box.

Power Line Carrier
The CPA and CPB are designed with the compensating reactor connected on the high voltage side of the primary winding, providing the option of using higher frequencies (> 400 kHz) for power line carrier transmission.

Stray Capacitance
The design with the compensating reactor on the high voltage side of the main winding ensures less than 200 pF stray capacitance, which is the most stringent requirement in the IEC standard for carrier properties.

Stability
The CPA and CPB have a high Quality Factor, as a result of their comparatively high capacitance, combined with a high intermediate voltage.

The Quality Factor = $C_{equivalent} \times U^2_{intermediate}$ is a measure of the accuracy stability and the transient response. The higher this factor, the better the accuracy, and the better the transient response.

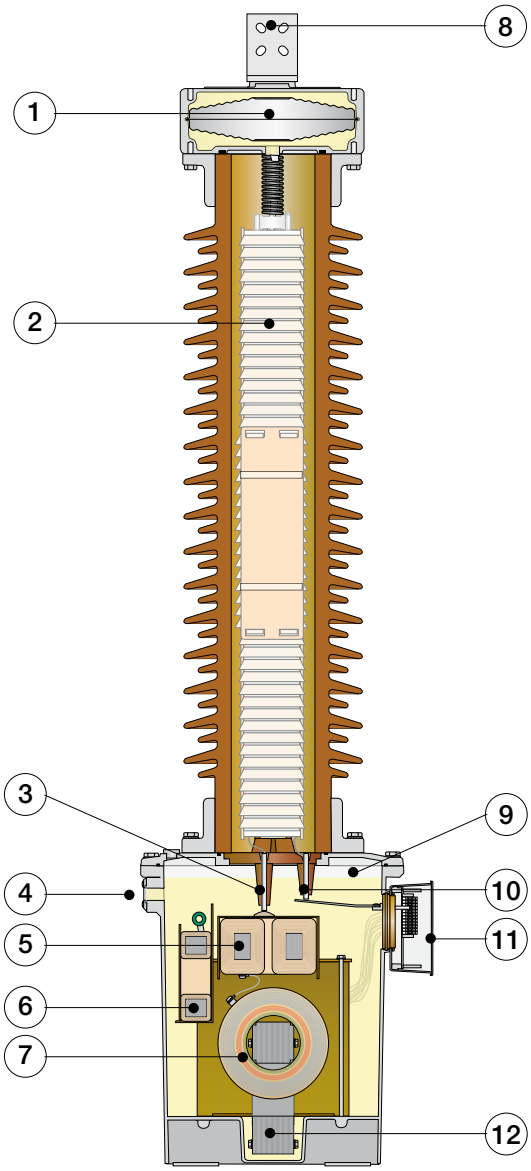

Capacitor Voltage Divider CSA or CSB
1. Expansion system
2. Capacitor elements
3. Intermediate voltage bushing
8. Primary terminal, flat 4-hole Al-pad
10. Low voltage terminal (for carrier frequency use)

Electromagnetic unit EOA or EOB
4. Oil level glass
5. Compensating reactor
6. Ferroresonance damping circuit
7. Primary and secondary windings
9. Gas cushion
11. Terminal box
12. Core

Customer's Notes

Tank Type Current Transformer IMB

For revenue metering and protection in high voltage networks, the oil-paper insulated current transformer IMB is the most sold transformer in the world.

- Designed for widely shifting conditions, from polar to desert climate
- Flexible tank type design allows large and/or many cores

The unique quartz filling minimizes the quantity of oil and provides a mechanical support to the cores and primary winding. Due to the low center of gravity the IMB is very suitable for areas with high seismic activity.
From international studies we can see that the IMB design is a reliable product (failure rate more than 4 times lower than average) with no need for regular maintenance.

Brief Performance Data	
Installation	Outdoor
Design	Tank (Hairpin) type
Insulation	Oil-paper-quartz
Highest voltage for equipment	36-765 kV
Max primary current	Up to 4000 A
Short-circuit current	Up to 63kA/1 sec
Insulators	Porcelain On request silicon rubber (SIR) up to 550 kV
Creepage distance	≥ 25 mm/kV (Longer on request)
Service conditions	
Ambient temperature	-40 °C to +40 °C (Others on request)
Design altitude	Maximum 1000 m (Others on request)

Tank Type Current Transformer IMB

Material
All external metal surfaces are made of an aluminum alloy, resistant to most known environment factors. Bolts, nuts, etc. are made of acid-proof steel. The aluminum surfaces do not normally need painting. We can, however, offer anodized or a protective paint.

Creepage Distance
As standard, IMB is offered with creepage distance ≥ 25 mm/kV. Longer creepage distance can be provided on request.

Mechanical Stability
The mechanical stability gives sufficient safety margins for normal wind loads and terminal forces. Static force on primary terminal may be up to 6,000 N in any direction. The IMB will also withstand most cases of seismic stress.

Rating Plates
Rating plates of stainless steel with engraved text and the wiring diagram are mounted on the cover of the terminal box.

Transport - Storage
The IMB 36 - 145 is normally transported (3-pack) and stored vertically. If horizontal transport is required this must be stated on the order.

The IMB 170 - 800 is packed for horizontal transport (1-pack).

Long-term storage of more than six months should preferably be made vertically. If this is not practical please contact ABB.

Arrival Inspection - Assembly
Please check the packaging and contents with regard to transport damage on arrival. In the event of damage to the goods, contact ABB for advice before further handling of the goods. Any damage should be documented (photographed).

The transformer must be assembled on a flat surface. An uneven surface can cause misalignment of the transformer, with the risk of oil leakage.

Assembly instructions are provided with each delivery.

Maintenance
The maintenance requirements are small, as IMB is hermetically sealed and designed for a service life of more than 30 years. Normally it is sufficient to check the oil level and that no oil leakage has occurred. Tightening of the primary connections should be checked occasionally to avoid overheating.

A more detailed check is recommended after 20-25 years of service. A manual for conditional monitoring can be supplied on request. This gives further guarantees for continued problem-free operation.

The methods and the scope of the checks depend greatly on the local conditions. Measurements of the dielectric losses of the insulation (tan delta-measurement) and/or oil sampling for dissolved gas analysis are recommended check methods.

Maintenance instructions are supplied with each delivery.

Oil Sampling
This is normally done through the oil-filling terminal. If required, we (ABB, HV Components) can offer other solutions and equipment for oil sampling.

Impregnation Agent
Oil of type Nynäs Nytro 10 XN (according to IEC 60296 grade 2) is free of PCB and other heavily toxic substances and has a low impact on the environment.

Disposal
After separating the oil and quartz the oil can be burned in an appropriate installation. Oil residue in the quartz can be burnt, where after the quartz can be deposited.

The disposal should be carried out in accordance with local legal provisions.

The porcelain can, after it has been crushed, be used as landfill.

The metals used in the transformer can be recycled. To recycle the aluminum and copper in the windings, the oil-soaked paper insulation should be burnt.

Tank Type Current Transformer IMB

Primary Terminals

IMB 36 – 800 is as standard equipped with aluminum bar terminals, suitable for IEC and NEMA specifications. Other customer specific solutions can be quoted on request.

Maximum static and dynamic force on the terminal is 6,000 and 8,400 N respectively. Maximum torsional moment is 1,000 Nm.

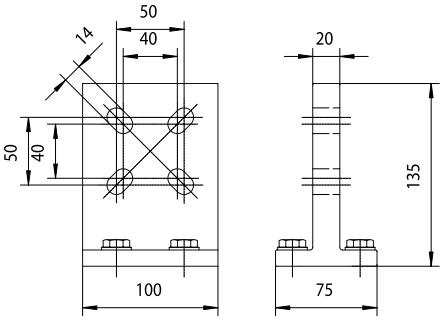

Secondary Terminal Box and Secondary Terminals

The transformer is equipped with a secondary terminal box, protection class IP 55, according to IEC 60529. This box is equipped with a detachable, undrilled gland plate, which on installation can be drilled for cable bushings.

The terminal box is provided with a drain. The standard terminal box can accommodate up to 30 terminals of the type PHOENIX 10N for cross section ≤10 mm². Other types of terminals can be quoted on request.

A larger terminal box with space for more secondary terminals or other equipment, such as heater or protective spark gaps, is supplied when needed.

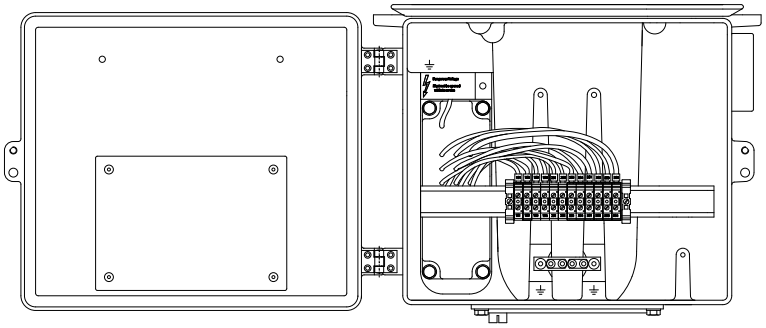

Standard for IMB 36 - 170

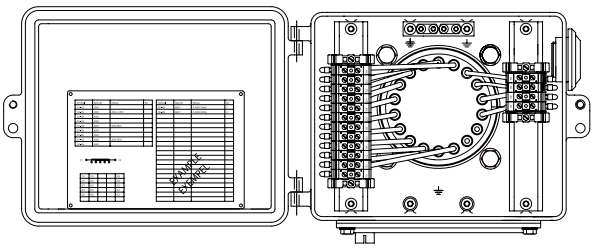

Standard for IMB 245 - 800

Ground (Earth) Terminal

The transformer is normally equipped with a ground clamp with a cap of nickel-plated brass, for conductors 8-16 mm (area: 50-200 mm²), which can be moved to either mounting foot.

A stainless steel bar, 80 x 145 x 8 mm, can be quoted on request. The bar can be supplied undrilled or drilled according to IEC or NEMA standards.

The ground terminal for the secondary windings is located inside the terminal box.

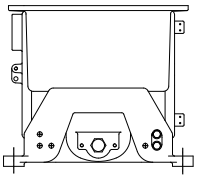

IMB 36-170

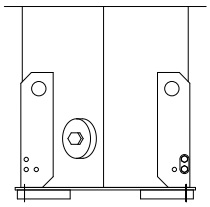

IMB 245-420

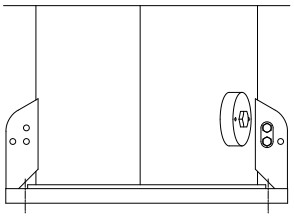

IMB 420-550

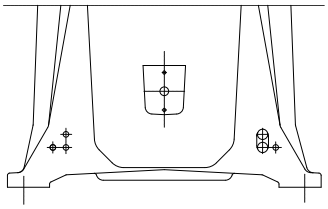

IMB 420-800

Design Data

Maximum Rated Current and Short-time Current

Type	Normal current	Cooling flanges	Cooler	Maximum short-time current 1 sec	Maximum short-time current 3 sec	Maximum dynamic current
	A	A	A	kA	kA	kA peak value
IMB 36-170	2400	-	3150	63	40	170
	1200	-	1500	40	40	108
	400	-	-	31,5	18	85
	150	-	-	16	9	43
IMB 245	2000	2400	3150	63	63	170
	1000	1200	1500	40	40	108
	300	-	-	31,5	18	85
	150	-	-	16	9	45
IMB 300-420	2500	-	3150	63	63	170
	1200	-	1500	40	40	108
IMB 420-550	2500	-	4000	63	40	170
	1200	-	2000	40	40	108
IMB 800	-	-	4000	63	40	170

Other types of primary conductors can be supplied on request
Maximum continuous primary current = load factor x primary rated current related to a daily mean temperature that does not exceed 35 °C
Primary winding can be designed with reconnection alternative between two or three primary rated currents with a ratio of 2:1 or 4:2:1

Test Voltages IEC 60044-1

Type	Highest voltage for equipment (Um)	AC voltage test, 1 minute wet/dry	Lightning impulse 1.2/50 µs	Switching impulse 250/2500 µs	RIV test voltage	Max RIV level
	kV	kV	kV	kV	kV Max.	µV
IMB 36	36	70/70	170	-	-	-
IMB 72	72,5	140/140	325	-	-	-
IMB 123	123	230/230	550	-	78	2500
IMB 145	145	275/275	650	-	92	2500
IMB 170	170	325/325	750	-	108	2500
IMB 245	245	460/460	1050	-	156	2500
IMB 300	300	-/460	1050	850	191	2500
IMB 362	362	-/510	1175	950	230	2500
IMB 420	420	-/630	1425	1050	267	2500
IMB 550	550	-/680	1550	1175	334	2500
IMB 800	765	-/975	2100	1550	486	2500

Test voltages above applies at ≤1000 meters above sea level.

Test Voltages IEEE C 57.13

Type	Highest system voltage	Power frequency applied voltage test	AC-test Wet, 10 sec	Lightning impulse (BIL) 1.2/50 µs	Chopped impulse	RIV test voltage	Max RIV level 1)
	kV	kV	kV	kV Max.	kV	kV	µV
IMB 36	36.5	70	70	200	230	21	125
IMB 72	72.5	140	140	350	400	42	125
IMB 123	123	230	230	550	630	78	250
IMB 145	145	275	275	650	750	92	250
IMB 170	170	325	315	750	865	108	250
IMB 245	245	460	445	1050	1210	156	250
IMB 362	362	575	-	1300	1500	230	250
IMB 550	550	800	-	1800	2070	334	500

1) Test procedure according to IEC, 2) Test voltages above applies at ≤1000 meters above sea level

Design Data

Nominal Flashover and Creepage Distance (Porcelain)

Type	Normal creepage distance 25 mm/kV (Min. values)			Long creepage distance 31 mm/kV (Min. values)		
	Flashover distance	Total creepage distance	Protected creepage distance	Flashover distance	Total creepage distance	Protected creepage distance
	mm	mm	mm	mm	mm	mm
IMB 36	-	-	-	630	2248	1020
IMB 72	-	-	-	630	2248	1020
IMB 123	1120	3625	1400	1120	4495	1860
IMB 145	1120	3625	1400	1120	4495	1860
IMB 170	-	-	-	1330	5270	2200
IMB 170[1]	-	-	-	1600	6525	2740
IMB 245	1915	6740	2850	2265	8490	3685
IMB 300	2265	8250	3495	2715	10430	4645
IMB 362	2715	10430	4645	3115	12480	5630
IMB 420	3115	12480	5630	3635	14325	6465
IMB 420	3220	11550	4800	3820	15280	6870
IMB 550	3820	15280	6870	4715	18944	8340
IMB 800	5220	18624	7950	-	-	-

Note: Long creepage distance effects dimensions A, B, D (see dimensions)
1) 38 mm/kV for 170 kV system voltage and 45 mm/kV for 145 kV system voltage is available.

Standard accuracy Classes.

Current transformers of the type IMB are designed to comply with the following accuracy classes. Other classes can be quoted on request.

IEC 60044 – 1	
Class	**Application**
0.2	Precision revenue metering
0.2S	
0.5	Standard revenue metering
0.5S	Precision revenue metering
1.0	Industrial grade meters
3.0	Instruments
5.0	Instruments
5P	Protection
5PR	Protection
10P	Protection
10PR	Protection
PX	Protection
TPS	Protection
TPX	Protection
TPY	Protection

IEEE C57.13 / IEEE C57.13.6	
Class	**Application**
0.15	Precision revenue metering
0.3	Standard revenue metering
0.6	Metering
1.2	Metering
C100	Protection
C200	Protection
C400	Protection
C800	Protection

Design Data

Burdens

Our current transformer IMB has a very flexible design allowing large burdens. However, it is important to determine the real power consumption of connected meters and relays including the cables. Unnecessary high burdens are often specified for modern equipment. Note that the accuracy for the measuring core, according to IEC, can be outside the class limit if the actual burden is below 25% of the rated burden.

Over-Voltage Protection Across Primary Winding

The voltage drop across the primary winding of a current transformer is normally very low. At rated primary current it is only a couple of volts and at short-circuit current a few hundred volts.

If a high frequency current or voltage wave passes through the primary winding can, due to the winding inductance, high voltage drops occur. This is not dangerous for a current transformer with a single-turn primary winding, but for multi-turn primaries may it lead to dielectric puncture between the primary turns.

It is therefore ABB's practice to protect the primary winding in multi-turn designs with a surge arrester connected in parallel with the primary.

Standard design of IMB current transformer is without surge arrester. Surge arrester of type **POLIM – C 1.8** will however be supplied automatically when needed.

Design and Shipping Data

Dimensions

Type	A Total height	B Height to primary terminal	C Ground level height	D Flashover distance	E Length across primary terminal bushing	F	G Dimen-sion of bottom tank	H	J Height to terminal box	K Spac-ing for mounting holes
	mm	mm	mm	mm	mm	mm	mm	mm	mm	mm
IMB 36[1]	2000	1635	840	630	475	270	410	460	60	410
IMB 72[1]	2000	1635	840	630	475	270	410	460	60	410
IMB 123[1]	2490	2125	840	1120	475	270	410	460	60	410
IMB 145[1]	2490	2125	840	1120	475	270	410	460	60	410
IMB 170[1]	2700	2335	840	1330	475	270	410	460	60	410
IMB 245[2]	3630	3045	965	1915	476	270	395	885	485	450
IMB 300[2]	4150	3405	965	2265	491	270	395	885	485	450
IMB 362[2]	4600	3855	965	2715	491	270	395	885	485	450
IMB 420[2]	5000	4255	965	3115	491	270	395	885	485	450
IMB 420[3]	5505	4760	1365	3220	491	320	380	1040	783	500
IMB 420[4]	5580	4790	1390	3220	526	360	410	1105	805	600
IMB 550[3]	6105	5360	1365	3820	491	320	380	1040	783	500
IMB 550[4]	6180	5390	1390	3820	526	360	410	1105	805	600
IMB 800[4]	8540	6790	1390	5220	526	360	410	1105	805	600

1) Standard tank, 2) Hexagonal tank, 3) Octagon tank, 4) HV tank

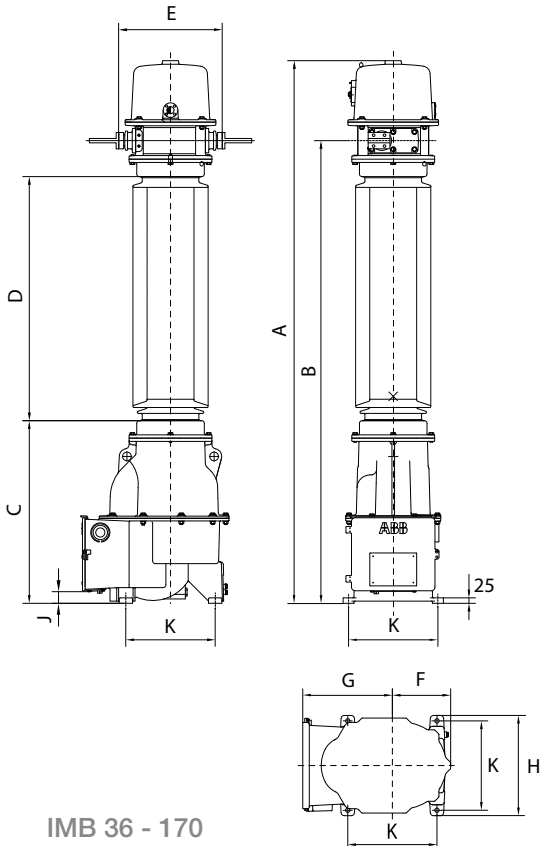

IMB 36 - 170

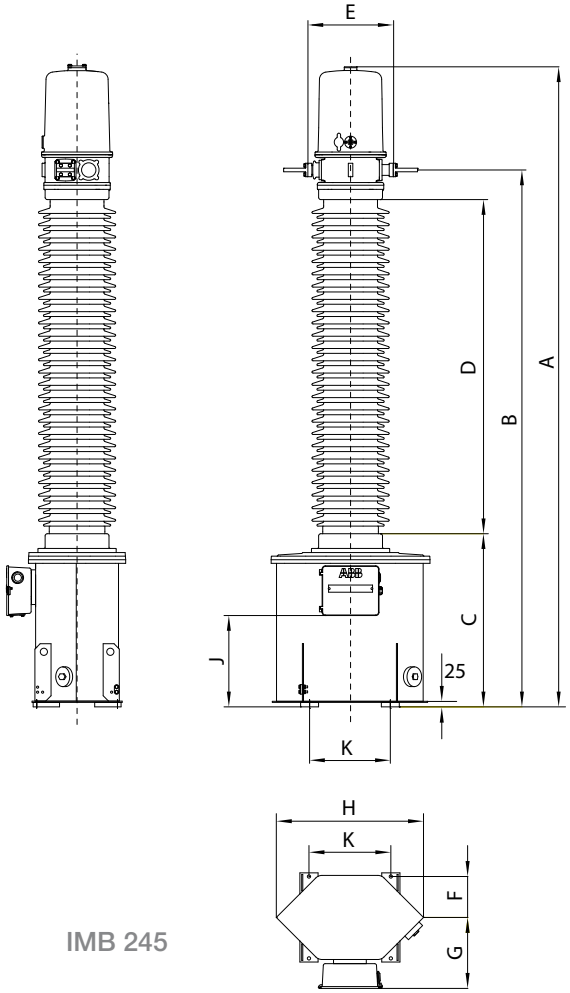

IMB 245

Design and Shipping Data

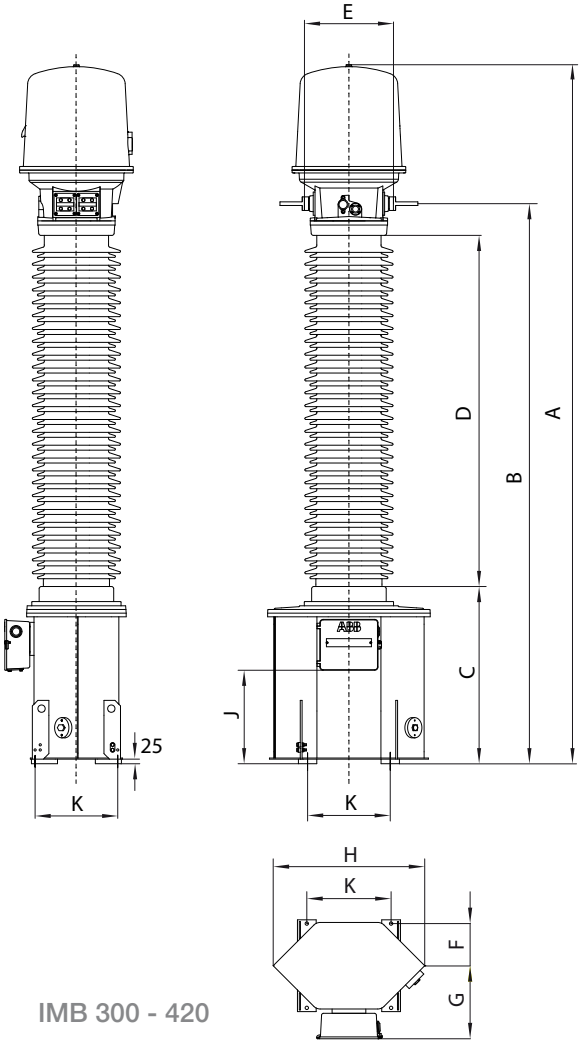

IMB 300 - 420

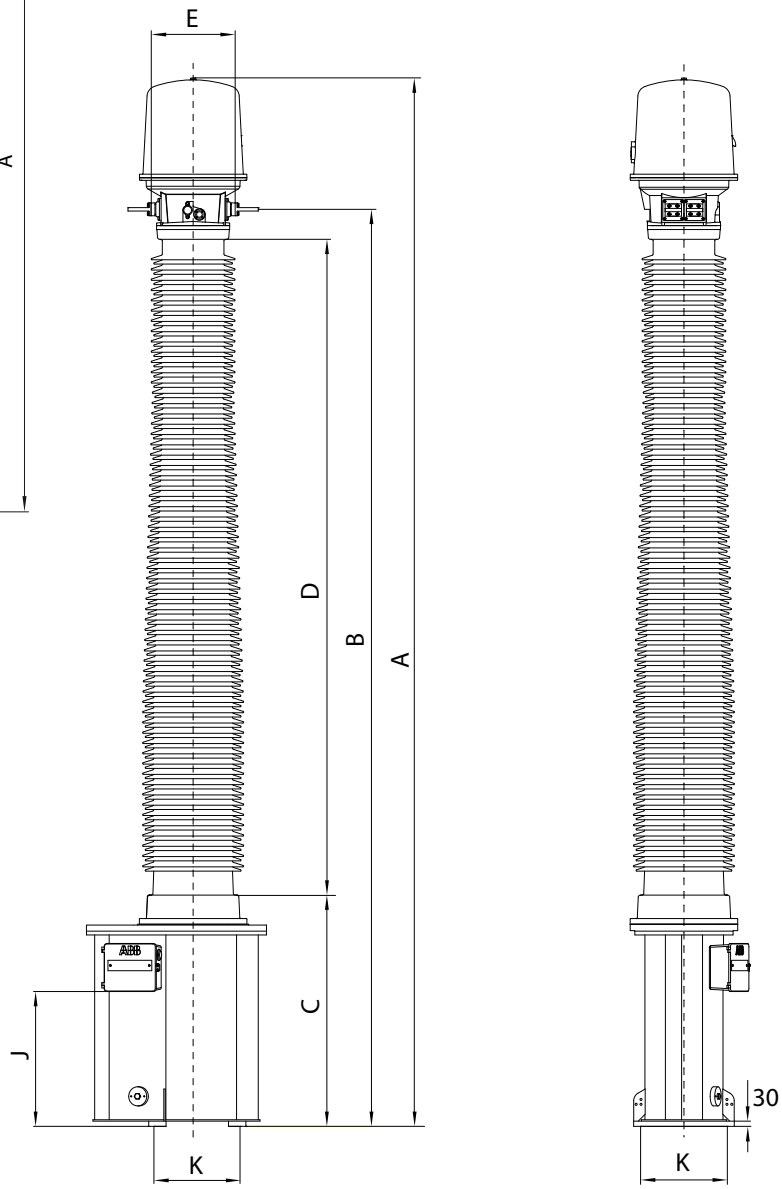

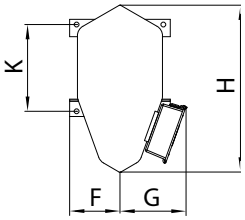

IMB 420 - 550

Design and Shipping Data

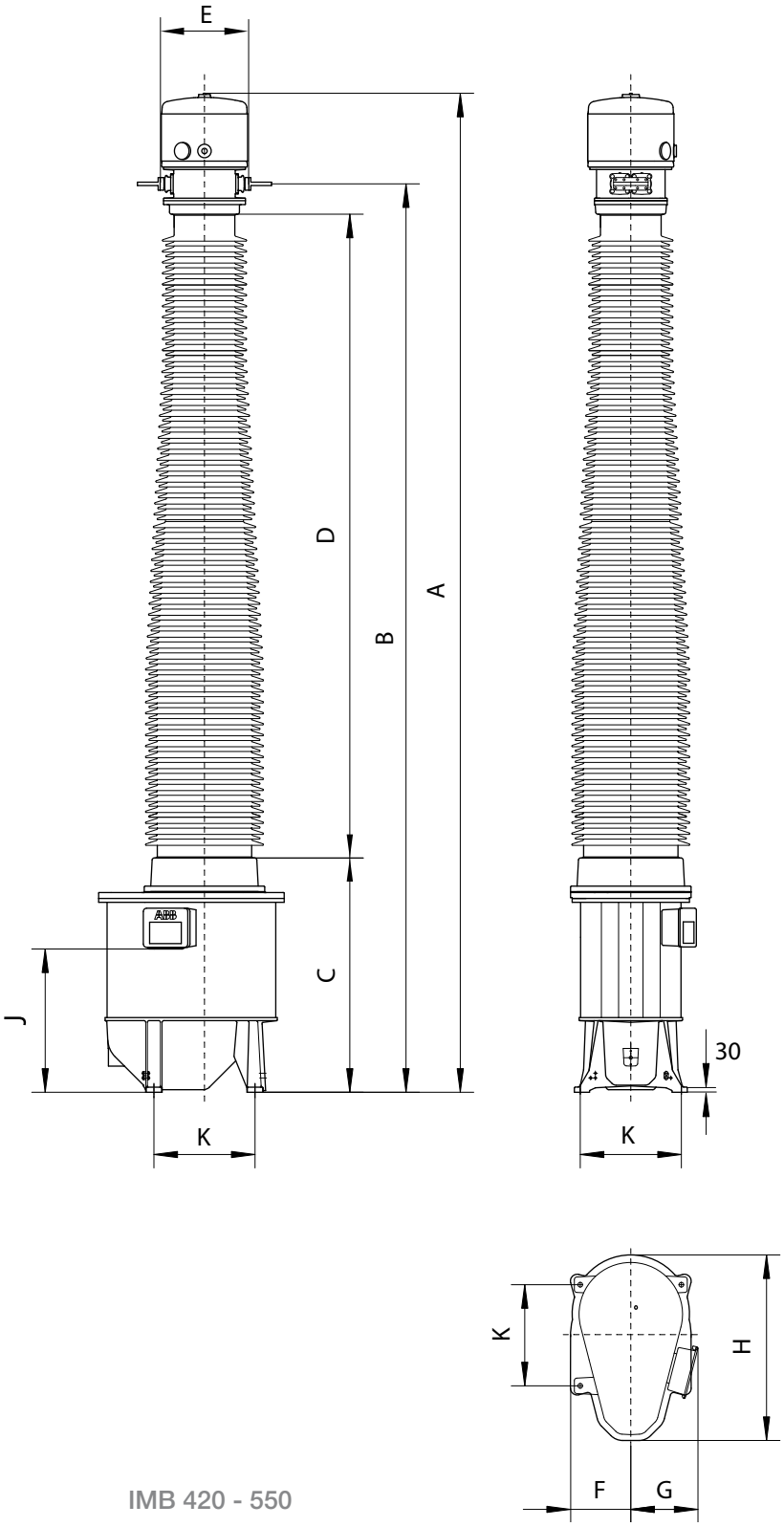

IMB 420 - 550

Design and Shipping Data

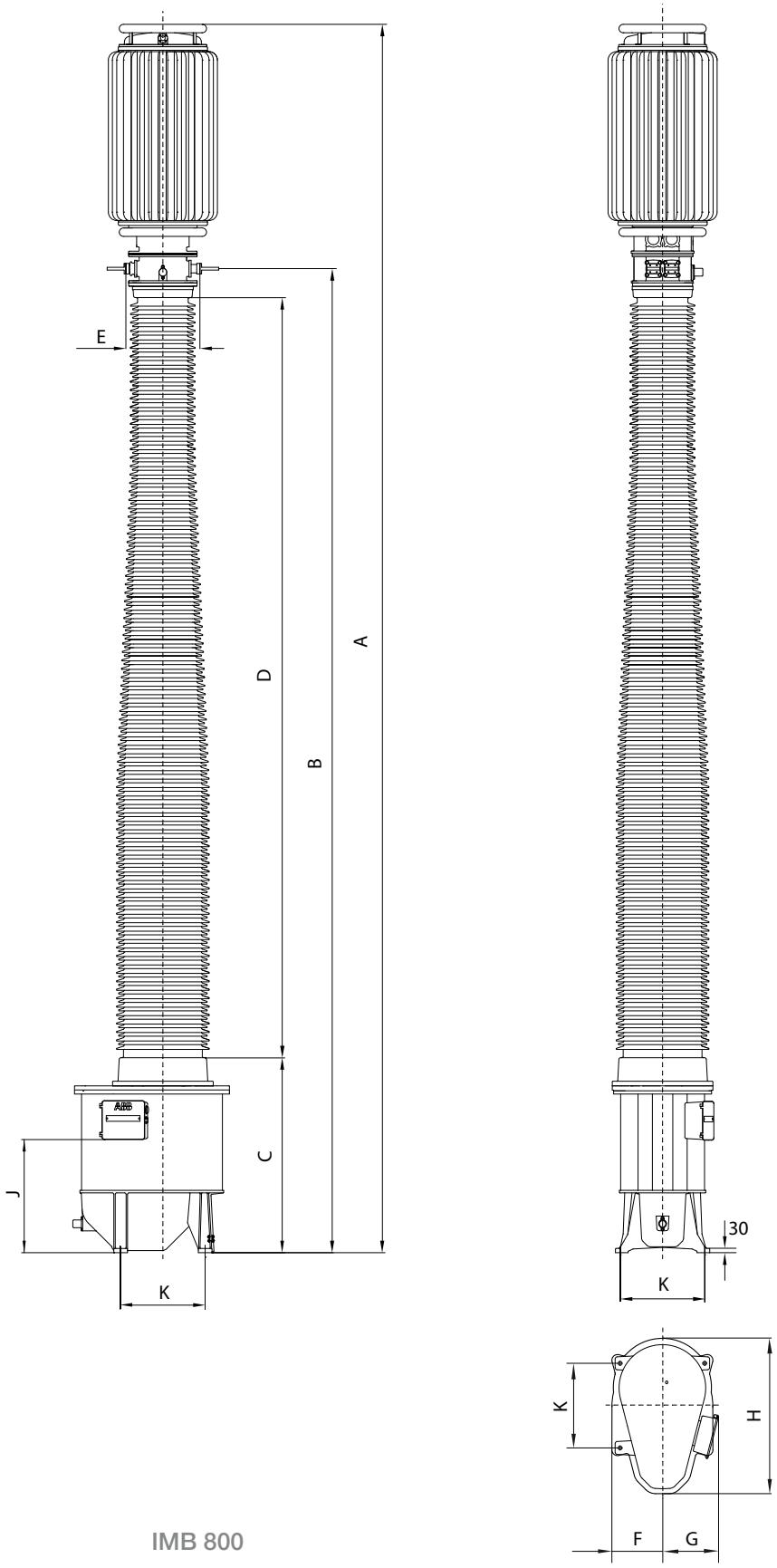

IMB 800

Design and Shipping Data

Changes, special design of dimensions

Tank-type	A, B, C Increased tank height	A Cooling flange	A Cooler	A Three primary ratios
	mm	mm	mm	mm
Standard tank	210	-	255	0
Hexagon tank	210 or 420	210	35 / 240 *)	-
Octagon tank	150	-	440	-
HV tank	200 or 400	-	400 **)	-

*) 35 mm for IMB 245, 240 mm for IMB 300 - 420
**) 400 mm for IMB 420 - 550, IMB 800 is always equipped with cooler

Shipping Data for Standard IMB

Type	Net weight Incl. oil	Oil	Shipping weight 1-pack/3-pack	Shipping dimensions 1-pack/3-pack	Shipping volume 1-pack/3-pack
	kg	kg	kg	LxWxH m	m^3
IMB 36[1]	420	45	550 / 1630	2.26x0.6x0.94 / 1.67x0.8x2.21	1.3 / 3
IMB 72[1]	420	45	550 / 1630	2.26x0.6x0.94 / 1.67x0.8x2.21	1.3 / 3
IMB 123[1]	490	50	650 / 1850	2.75x0.6x0.94 / 1.67x0.8x2.7	1.5 / 3.6
IMB 145[1]	490	50	650 / 1850	2.75x0.6x0.94 / 1.67x0.8x2.7	1.5 / 3.6
IMB 170[1]	550	55	700 / -	2.96x0.6x0.94 / -	1.7 / -
IMB 245[2]	1100	110	1390 / -	3.82x1.06x1.02 / -	4.2 / -
IMB 300[2]	1400	170	1815 / -	4.76x1.08x1.10 / -	5.7 / -
IMB 362[2]	1500	180	1915 / -	4.76x1.08x1.10 / -	5.7 / -
IMB 420[2]	1600	190	2050 / -	5.21x1.08x1.10 / -	6.2 / -
IMB 420[3]	2500	300	3120 / -	5.82x1.23x1.22 / -	8.8 / -
IMB 420[4]	2600	290	3220 / -	5.74x1.06x1.47 / -	9.0 / -
IMB 550[3]	2800	330	3480 / -	6.42x1.23x1.22 / -	9.7 / -
IMB 550[4]	3500	510	4180 / -	6.34x1.06x1.47 / -	9.9 / -
IMB 800[4]	4200	670	6400 / -	8.71x1.06x1.47 / -	13.5 / -

1) Standard tank
2) Hexagonal tank
3) Octagon tank
4) HV tank

IMB 36 - 145 is normally packed for vertical transport in a 3-pack.
Vertical transport in a 1-pack can be quoted on request.
IMB 170 - 800 is always packed for horizontal transport in 1-pack.

Additional weights

Weight indicated in table above is for standard IMB.
Additional weights may occur depending on requirements and configuration.

Reconnection

General

The current transformer can be reconnected to adapt for varying currents. The IMB type can be delivered in a configuration that permits reconnecttion either on primary or secondary side, or a combination of the two.

The advantage of primary reconnection is that the ampere-turns remains the same and thereby the output (VA). The disadvantage is that the short-circuit capability will be reduced for the lower ratio(s).

Primary Reconnection

Two primary ratios for two turns

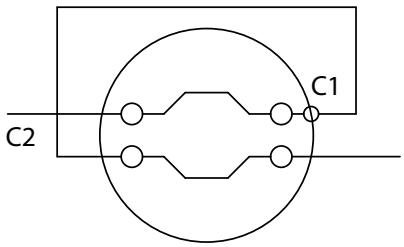

Connection above is for the lower current

Two primary ratios, connected for one turn

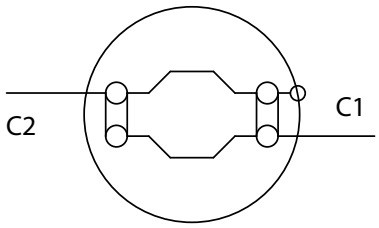

Connection above is for the higher current

Secondary Reconnection

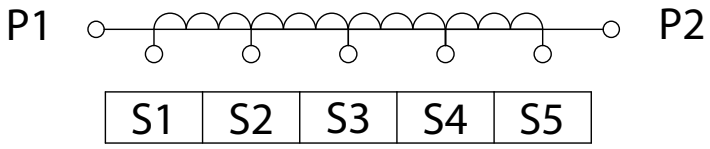

The unused taps on the reconnectable secondary winding must be left open.

If windings/cores are not used in a current transformer they must be short-circuited between the highest ratio taps (e.g. S1 - S5) and shall be grounded.

Caution!
Never leave an unused secondary winding open.
Very high-induced voltages are generated across the terminals and both the user and the transformer are subjected to danger.

Inductive Voltage Transformer EMF

For revenue metering and protection in high voltage networks, the oil-paper insulated voltage transformer EMF is the most sold inductive voltage transformer in the world.

- Designed for widely shifting conditions, from polar to desert climates.

The unique quartz filling minimizes the quantity of oil and allows a simple and reliable expansion system.

- Low flux in the core at operating voltage gives a wide safety margin against saturation and ferro-resonance.

Brief Performance Data

Installation	Outdoor
Design	Inductive type
Insulation	Oil-paper-quartz
Highest voltage for equipment	52-170 kV
Voltage factor (Vf)	Up to 1.9/8 hrs
Insulators	Porcelain On request silicon rubber (SIR)
Creepage distance	≥ 25 mm/kV (Longer on request)
Service conditions	
Ambient temperature	-40 °C to +40 °C (others on request)
Design altitude	Maximum 1000 m (others on request)

Inductive Voltage Transformer EMF

Material
EMF 52-170: All external metal surfaces are made of an aluminum alloy, resistant to most known environment factors. Bolts, nuts, etc. are made of acid-proof steel. The aluminum surfaces do not normally need painting. We can, however, offer a protective paint or anodized.

Creepage Distance
EMF is available as standard with normal or long creepage distances according to the table on page J-4. Longer creepage distances can be quoted on request.

Mechanical Stability
The mechanical stability gives a sufficient safety margin for normal wind loads and stress from conductors. EMF can also withstand high seismic forces.

Rating Plates
Rating plates of stainless steel, with engraved text and wiring diagrams are mounted on the transformer enclosure.

Arrival Inspection - Assembly
Please check the packaging and contents with regard to transport damage on arrival. In the event of damage to the goods, contact ABB for advice, before further handling of the goods. Any damage should be documented (photographed).

The transformer must be assembled on a flat surface. An uneven surface can cause misalignment of the transformer, with the risk of oil leakage.

Assembly instructions are provided with each delivery.

Maintenance
Maintenance requirements are insignificant as EMF is designed for a service life of more than 30 years.

Normally it is only necessary to check that the oil level is correct, and that no oil leakage has occurred. The transformers are hermetically sealed and therefore require no other inspection.

A comprehensive inspection is recommended after 30 years. This provides increased safety and continued problem-free operation. The inspection methods and scope very significantly depending on the local conditions. As the primary winding is not capacitive graded, the measurement of tan-delta gives no significant result. Therefore oil sampling for dissolved gas analysis is recommended for checking the insulation.

Maintenance instructions are supplied with each delivery.

ABB, High Voltage Products is at your disposal for discussions and advice.

Impregnation Agent
Oil of type Nynäs Nytro 10 XN
(according to IEC 296 grade 2) is free of PCB and other heavily toxic substances and has a low impact on the environment.

Disposal
After separating the oil and quartz the oil can be burned in an appropriate installation. Oil residue in the quartz can be burnt, where after the quartz can be deposited.

The disposal should be carried out in accordance with local legal provisions.

The porcelain can, after it has been crushed, be used as landfill.

The metals used in the transformer can be recycled. To recycle the copper in the windings, the oil-soaked paper insulation should be burnt.

Inductive Voltage Transformer EMF

Primary Terminals

EMF 52-170 is as standard equipped with an aluminum bar terminal, suitable for IEC and NEMA specifications.

The primary terminal is a voltage terminal and should therefore, according to standards, withstand static force of 1,000 N for U_m (system voltage) 123 – 170 kV and 500 N for lower voltages. Withstand dynamic force is 1,400 and 700 N respectively.

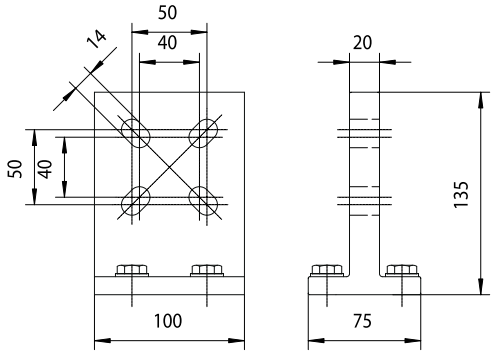

EMF 52-170

Secondary Terminal Box and Secondary Terminals

The terminal box for the secondary winding terminal is mounted on the transformer enclosure. As standard the terminal box is manufactured of corrosion resistant, cast aluminum.

This box is equipped with a detachable, undrilled gland plate, which on installation can be drilled for cable bushings. It can, on request, be quoted with cable glands according to the customer's specification.

The terminal box is provided with a drain.

EMF 52-170: Secondary terminals accept wires with cross-sections up to 10 mm^2.

Protection class for the terminal box is IP 55.

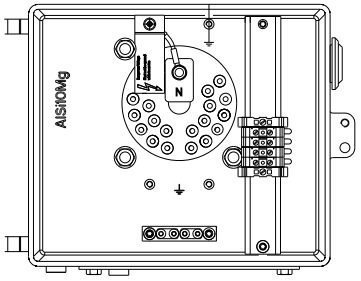

EMF 52-84

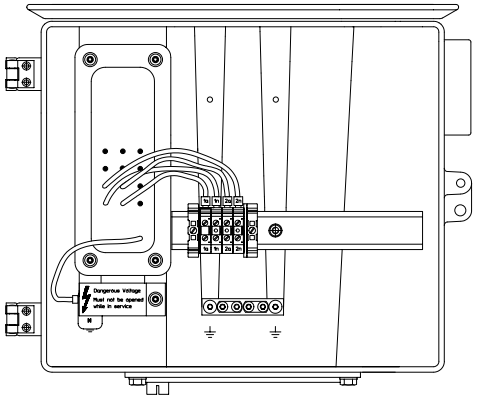

EMF 123-170

Ground (Earth) Connections

The transformer is normally equipped with a ground terminal with a clamp of nickel-plated brass. For conductors Ø=5-16 mm (area 20-200 mm^2), see the figure.
It can also be quoted on request with a connection for a ground bar.

Grounding of the secondary circuits is made inside the terminal box.

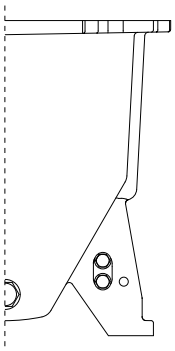

EMF 52-84

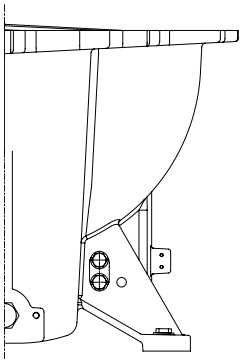

EMF 123-170

Design Data

Nominal Flash-Over and Creepage Distance

Type	Normal porcelain (min. nom. values)			Porcelain with long creepage distance (min. nom. values)		
	Flash-over distance	Creepage distance	Protected creepage distance	Flash-over distance	Creepage distance	Protected creepage distance
	mm	mm	mm	mm	mm	mm
EMF 52	630	2248	1020	-	-	-
EMF 72	630	2248	1020	-	-	-
EMF 84	630	2248	1020	-	-	-
EMF 123	1200	3625	1400	-	-	-
EMF 145	1200	3625	1400	1330	5270	2200
EMF 170	1330	5270	2200	-	-	-

Test Voltages IEC 60044-2, (SS-EN 60044-2)

Type	Highest voltage for equipment (Um)	1min wet/dry	LIWL 1.2/50 µs	RIV test voltage	RIV level
	kV	kV	kV	kV Max.	µV
EMF 52	52	95	250	30	125
EMF 72	72.5	140	325	46	125
EMF 84	84	150	380	54	125
EMF 123	123	230	550	78	2500
EMF 145	145	275	650	92	2500
EMF 170	170	325	750	108	2500

Test voltages above are valid for altitudes ≤1000 meters above sea level.

Test Voltages IEEE C 57.13 (CAN 3 – C 131 – M83)

Type	Highest voltage for equipment (Um)	AC test dry, 1 min	AC test wet, 10 sec	BIL 1.2/50 µs
	kV	kV	kV	kV Max.
EMF 52	52	95	95	250
EMF 72	72.5	140	175	350
EMF 123	121 (123)	230	230	550
EMF 145	145	275	275	650
EMF 170	169 (170)	325	315 (325)	750

Values within brackets refer to CAN 3-C13.1-M79. Test voltages above are valid for altitudes ≤ 1000 meters above sea level.

Design Data According to IEC

Secondary Voltages and Burdens

Standards	International IEC 60044-2, (IEC 186) Swedish Standard SS-EN 60044-2
Rated data at 50 or 60 Hz, Voltage factor 1.5 or 1.9	The transformer normally has one or two windings for continuous load and one residual voltage winding. Other configurations can be quoted according to requirements.

Standard Accuracy Classes and Burdens

According to IEC	
50 VA class 0.2	100 VA class 3P
100 VA class 0.5	100 VA class 3P
150 VA class 1.0	100 VA class 3P
For lower or higher burdens please contact us.	

The standards state as standard values for rated voltage factor 1.5/30 sec. for effectively earthed systems, 1.9/30 sec. for systems without effective earthing with automatic earth fault tripping and 1.9/8 hrs for systems with insulated neutral point without automatic earth fault tripping.

Since the residual voltage winding is not loaded except during a fault, the effect of its load on the accuracy of the other windings is disregarded in accordance with IEC.

Please note that modern meters and protection require much lower burdens than those above, and to achive best accuracy you should avoid specifying burdens higher than necessary; see page B-3.

Design Data According to IEEE and CAN3

Secondary Voltages and Burdens

Standards	American IEEE C57.13-1993 Canadian CAN3-C13-M83
Rated data at 60 Hz, Voltage factor 1.4	The transformer normally has one or two secondary windings for continuous load (Y-connected).

Standard Accuracy Classes and Burdens

According to IEEE and CAN3		
0.3 WXY	0.6 WXYZ	1.2/3P WXYZ
For lower or higher burdens please contact us.		

Rated burdens
W = 12.5 VA power factor 0.1
X = 25 VA power factor 0.7
Y = 75 VA power factor 0.85
YY = 150 VA power factor 0.85
Z = 200 VA power factor 0.85
ZZ = 400 VA power factor 0.85

Example of turn ratio:
350-600:1 means one secondary winding with the ratio 350:1 and one tertiary winding ratio 600:1
350/600:1:1 means one secondary winding and one tertiary winding both with taps for ratios 350:1 and 600:1
Protective classes according to CAN (1P, 2P, 3P) can be quoted on request.
Voltage factor 1.9 according to CAN can be quoted on request.

Design Data - Dimensions

Voltage Transformers EMF

Type	A Total height mm	B Flash-over distance mm	C Height to terminal box mm	D Fixing hole dimensions mm	E Ground level height mm	F Expansion vessel diameter mm
EMF 52	1464	630	114	335 x 335	540	324
EMF 72	1464	630	114	335 x 335	540	324
EMF 84	1464	630	114	335 x 335	540	324
EMF 123	2360	1200	65	410 x 410	760	416
EMF 145	2360	1200	65	410 x 410	760	416
EMF 170	2490	1330	65	410 x 410	760	416

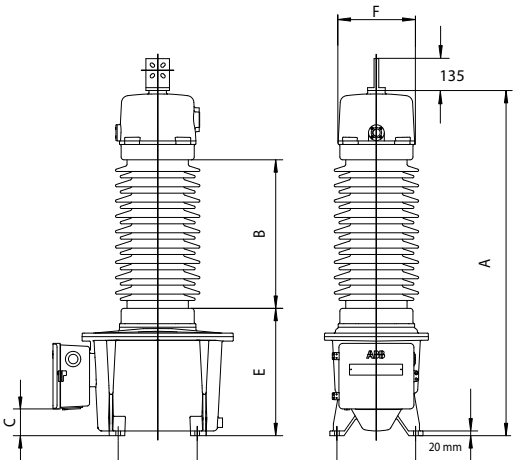

EMF 52-84
Note: Primary terminal will be mounted at site

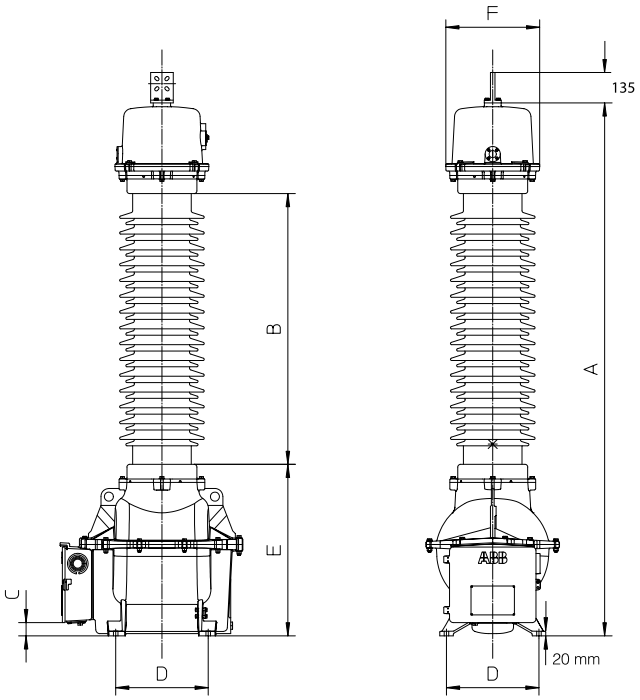

EMF 123-170
Note: Primary terminal will be mounted at site

Design Data - Shipping Data

Voltage Transformers EMF

Type	Net weight incl. oil Porcelain insulator	Oil	Shipping weight 3-pack	Shipping dimensions 3-pack L x W x H	Shipping volume 3-pack
	kg	kg	kg	m	m^3
EMF 52	300	40	1040	1.6 x 0.9 x 1.7	2.5
EMF 72	300	40	1040	1.6 x 0.9 x 1.7	2.5
EMF 84	300	40	1040	1.6 x 0.9 x 1.7	2.5
EMF 123	570	80	1975	2 x 1 x 2.6	5.2
EMF 145	570	80	1975	2 x 1 x 2.6	5.2
EMF 170	610	83	2130	2 x 1 x 2.7	5.4

EMF 52 - 84 must not be tilted more than 60° during transport and storage.
Signs are placed on the transformer's rating plate.

EMF 123 - 170 is normally packed for vertical transport (3-pack).
However, it can be transported in a horizontal position and is available on request for horizontal transport (1-pack).

Capacitor Voltage Transformer CPA and CPB (IEC)

For revenue metering and protection in high voltage networks. The overall design of the CVT and the mixed dielectric in the capacitor elements have proven to be insensitive to temperature changes, and the accuracy is equivalent to inductive voltage transformers. These CVTs are designed for widely shifting conditions, from polar to desert climates.

The CPA and CPB have a high Quality Factor, as a result of their comparatively high capacitance, combined with a high intermediate voltage.
The Quality Factor = $C_{equivalent} \times U^2_{intermediate}$ is a measure of the accuracy stability. The higher this factor, the better the accuracy, and the better the transient response.

Brief Performance Data

Installation	Outdoor
Design	Capacitor type Meets IEC standards
Insulation	
CVD	Aluminum-foil/paper/ poly-propylene film, synthetic oil
EMU	Paper - mineral oil
Highest voltage for equipment	72-765 kV
Voltage factor (Vf)	Up to 1.9/8 hrs
Insulators	Porcelain - on request silicon rubber (SIR)
Creepage distance	≥ 25 mm/kV (longer on request)
Service conditions	
Ambient temperature	-40 °C to +40 °C (others on request)
Design altitude	Maximum 1000 m (others on request)

Capacitor Voltage Transformer CPA and CPB (IEC)

Material
All external metal surfaces are made of an aluminum alloy, resistant to most known environment factors. Bolts, nuts, etc. are made of acid-proof steel. The aluminum surfaces do not normally need painting. We can, however, offer a protective paint, normally light gray.

Creepage Distance
As standard, CPA and CPB are offered with creepage distance 25 mm/kV. Longer creepage distances can be offered on request.

Silicone Rubber Insulators
The complete CVT and CC range is available with silicone rubber (SIR) insulators. Our SIR insulators are produced with a patented helical extrusion molding technique, which gives completely joint-free insulators with outstanding performance. All CVTs and CCs with this type of insulators have the same high creepage distance, 25 mm/kV, as porcelain.

Mechanical Stability
The mechanical stability gives sufficient a safety margin for normal wind loads and conductor forces. In most cases, with help of the optional top plate, it is also possible to mount line traps for power line carrier equipment directly on top of the capacitor divider. The CPA and CPB will also withstand most cases of seismic stress.

Ferroresonance Damping Circuit
All CVTs need to incorporate some kind of ferro-resonance damping, since the capacitance in the voltage divider, in series with the inductance of the transformer and the series reactor, constitutes a tuned resonance circuit.

This circuit can be brought into resonance, that may saturate the iron core of the transformer by various disturbances in the network. This phenomenon can also overheat the electro-magnetic unit, or lead to insulation breakdown.

The CPA and CPB use a damping circuit, connected in parallel with one of the secondary windings (see diagram on page I-11). The damping circuit consists of a reactor with an iron core, and an oil-cooled resistor in series. Under normal use, the iron core of the damping reactor is not saturated, yielding high impedance, so that practically no current is flowing through this circuit.

The damping circuit has two bridged terminals; d1- d2, behind a sealed covering hood in the terminal box. In particular cases and after agreement this bridge can be opened, to check that the circuit is intact, by resistance measurement.

Ratio Adjustment
The transformer of the electromagnetic unit has five adjustment windings on the earth side of the primary winding. The numbers of turns of these windings have been chosen so that the ratio can be adjusted ±6.05% in steps of 0.05%. These windings are externally accessible behind a sealed covering hood in the secondary terminal box. The CVT is delivered adjusted for a specified burden and class, and normally no further adjustment is necessary.

If needed, the adjustment windings enable exchange of the voltage divider on site, and readjust the transformer for the new combination of voltage divider/electromagnetic unit.

Rating Plates
Corrosion resistant rating plates with text and wiring diagrams are used. General data can be found on the door of the terminal box, connection diagrams and secondary winding data on the inside.

The capacitors are marked with measured capacitance on the insulator(s) base flange.

Power Line Carrier (PLC)
As an option all CVTs can be equipped with Carrier Accessories. Modern PLC equipments are adapted for a wide range of coupling capacitors. None specific capacitance is required. Only minimum capacitance must be specified due to choice of frequency.

Capacitor Voltage Transformer CPA and CPB (IEC)

Primary Terminal

CPA and CPB are normally delivered with a flat 4-hole aluminum pad, suitable for bolts C-C from 40 to 50 mm and for connecting normal aluminum cable clamps. Other primary terminals can be offered on request, such as a round aluminum studs, Ø=30 mm.

Maximum static force on the primary terminal is 1,500 N in all directions. Maximum dynamic force is 2,100 N
(Static/dynamic 1,300/1,800 N for CPB 800)

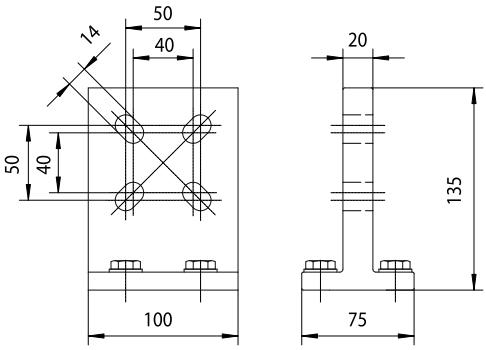

Secondary Terminal Box and Secondary Terminals

The transformer is equipped with a secondary terminal box, protection class IP 55. This box is equipped with a detachable, undrilled gland plate, which on installation can be drilled for cable bushings. The box is provided with a drain.

The transformer can also be equipped with a larger terminal box, with space for fuses or micro circuit breakers and / or protection for power line carrier equipment.

The secondary terminals normally consist of Phoenix standard terminal blocks for wire cross-section 10 mm². In the terminal box are also terminals (d1-d2) for damping circuit, terminals for the adjustment windings (B1 to B10) and the capacitor low voltage terminal ”L” (for power line carrier equipment). Terminals d1 - d2 and B1 - B10 are intended for factory settings and thus located behind a sealed covering hood to prevent inadvertent reconnection.

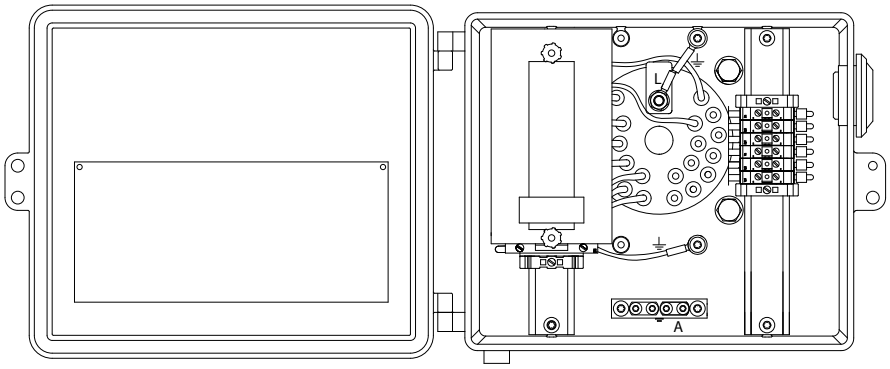

Standard Terminal Box
Without Carrier Accessories and Fuses

The ”L” terminal must always be grounded if no carrier equipment is connected.

Ground Terminals

The transformer is normally equipped with an ground clamp with a cap of nickel-plated brass, for conductors 8-16 mm (area 50-200 mm²), which can be moved to either mounting foot.

A stainless steel bar, 80 x 145 x 8 mm, can be quoted on request. The bar can be supplied undrilled or drilled according to IEC or NEMA standards. Grounding terminals for the secondary circuits are placed inside the terminal box.

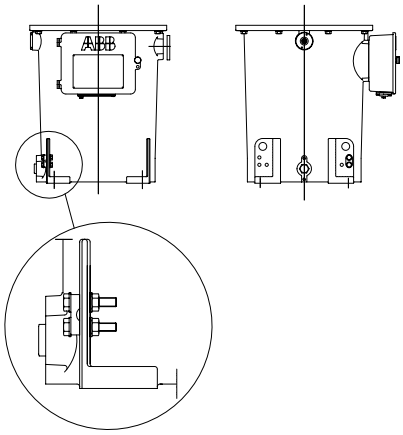

Installation and Maintenance (IEC)

Unpacking

Please check the crates and their contents for damage during transportation upon receipt. Should there be any damage, please contact ABB for advice before the goods are handled further. Any damage should be documented (photographed).

Assembly

The electromagnetic unit and the capacitor voltage divider are delivered as one unit for CVTs with system voltages up to 245 kV.

CVTs with higher system voltages, having more than one CVD part, are delivered with the bottom unit of the CVD assembled onto the EMU.

The EMU, with the bottom CVD unit should be installed first, before the top part(s) of the CVD is (are) mounted in place. Lifting instructions are included in each package.

Check that the top and the bottom insulator have the same serial number (for CVDs with more than one capacitor unit).

Maintenance

The CPA and CPB are designed for a service life of more than 30 years, and are practically maintenance-free. We recommend however the following controls and measures.

- **Visual check**

We recommend a periodic inspection, to check for oil leakages and also to inspect the insulator for collection of dirt.

- **Control measurements of the CVD**

Since the voltage dividers are permanently sealed under slight over pressure it is not possible to take oil samples from them.

Under normal service conditions, no noticeable ageing will occur within the capacitors (verified by ageing tests). However discrepancies between the secondary voltages in parallel phases can be an indication of a fault in a capacitor part of one of the voltage transformers, which is why such a comparison is recommended. In such a case a further measurement of the capacitance value is recommended. Readings can be taken between the top and the ”L” terminal in the secondary terminal box.

- **Control measurements of the EMU**

A simple test is to measure the insulation resistance in mega-ohms (max. test voltage 1,000 VDC) of the secondary windings.

Since the high voltage winding of the transformer is not capacitively graded, a measurement of the loss angle (tan delta) will give no significant result.

What is possible, however, is to take an oil sample, for gas chromatography analysis from the electromagnetic unit to assess its condition.

The tank of the electromagnetic unit can, on request, be equipped with a sampling valve, and we can deliver suitable sampling equipment. A simpler method is to take the oil sample from the oil-filling hole. Sampling intervals will vary, depending on service conditions; generally, no oil analysis should be necessary during the first 20 years of service.

Environmental Aspects

Impregnant

Both Faradol 810 (the synthetic oil in the voltage dividers), and Nynäs NYTRO 10 XN (the standard transformer oil in the electromagnetic unit) are free from PCB and other strongly harmful substances, and pose a low impact to the environment.

Destruction

After draining the oils, they can be burnt in an appropriate plant. In this respect, Faradol has similar combustion properties as normal mineral oil.

The disposal should be carried out in accordance with local legal provisions, laws and regulations.

The porcelain can be deposited after it has been crushed.

The metals in the electromagnetic unit and the housings of the voltage divider can be recycled. Aluminum parts are labeled with material specifications. In order to recycle the copper in the windings, the oil-saturated paper insulation should be burnt.

The aluminum in the capacitor elements, with their combination of foil, paper and polypropylene film, can be recycled after the insulation has been burnt; the plastic film will not emit any harmful substances during this process.

Design Data According to IEC

Number of capacitor units, capacitance, flash-over and creepage distance (CSA, standard capacitance) (also valid for CCA)

Type	Number of capacitor units	Standard capacitance	Normal porcelain (min. nom. values)			Porcelain with extra long creepage distance (min. nom. values)
			Flashover distance	Creepage distance	Protected creepage distance	
		pF (+10; -5%)	mm	mm	mm	
CPA/CPB 72	1	23500	700	2200	890	Offered on request. Normally porcelain as for the nearest higher voltage
CPA/CPB 123	1	14500	980	3160	1282	
CPA/CPB 145	1	12600	1190	3880	1545	
CPA/CPB 170	1	10500	1400	4600	1835	
CPA/CPB 245	1	7500	1960	6510	2610	
CPA/CPB 300	2	6300	2380	7760	3090	
CPA/CPB 362	2	5200	2800	9200	3670	
CPA/CPB 420	2	4700	3220	10630	4250	
CPA/CPB 550	2	3500	4200	13980	5610	

Number of capacitor units, capacitance, flash-over and creepage distance (CSB, extra high capacitance) (also valid for CCB)

Type	Number of capacitor units	Extra high capacitance	Normal porcelain (min. nom. values)			Porcelain with extra long creepage distance (min. nom. values)
			Flashover distance	Creepage distance	Protected creepage distance	
		pF (+10; -5%)	mm	mm	mm	
CPA/CPB 145	1	18900	1400	4600	1835	Offered on request. Normally porcelain as for the nearest higher voltage
CPA/CPB 170	1	15700	1400	4600	1835	
CPA/CPB 245	1	11300	2100	6990	2805	
CPA/CPB 300	2	9400	2800	9200	3670	
CPA/CPB 362	2	7900	2800	9200	3670	
CPA/CPB 420	2	7100	3220	10630	4250	
CPA/CPB 550	2	5200	4200	13980	5610	
-----/CPB 800	3	3500	6300	20970	8415	

Test Voltages: IEC 60044-5

Type	Highest voltage for equipment (Um)	1min wet/dry	LIWL 1.2/50 µs	Switching impulse 250/2500 µs	PD Test voltage	Max. PD level	RIV test voltage	RIV level
	kV	kV	kV	kV	kV	pC *)	kV Max.	µV
CPA/CPB 72	72.5	140/140	325	-	1.2 x Um	10	-	-
CPA/CPB 123	123	230/230	550	-	1.2 x Um	10	78	2500
CPA/CPB 145	145	275/275	650	-	1.2 x Um	10	92	2500
CPA/CPB 170	170	325/325	750	-	1.2 x Um	10	108	2500
CPA/CPB 245	245	460/460	1050	-	1.2 x Um	10	156	2500
CPA/CPB 300	300	-/460	1050	850	1.2 x Um	10	191	2500
CPA/CPB 362	362	-/510	1175	950	1.2 x Um	10	230	2500
CPA/CPB 420	420	-/630	1425	1050	Um	10	267	2500
CPA/CPB 550	525	-/680	1550	1175	Um	10	349	2500
-----/CPB 800	765	-/975	2100	1425	Um	10	508	2500

Test voltages above are valid for altitudes ≤ 1000 meters above sea level. *) 5 pC at test voltage 1.2 x Um/√3

Design Data According to IEC

Secondary Voltage and Burdens

Standards IEC 60044-5

Rated data at 50 or 60 Hz, Voltage factor 1.5 or 1.9

The transformer normally has one or two windings for continuous load, and one earth-fault winding. Other configurations can be offered according to requirements.

Approximate Maximum Total Burdens in VA

Measuring winding				
Highest class	**Voltage factor 1.5*)**		**Voltage factor 1.9*)**	
	CPA	**CPB**	**CPA**	**CPB**
0.2	70	120	40	100
0.5	200	400	125	300
1.0/3P T1	400	400	200	400
Earth-fault winding, irrespective of the voltage factor				
3P T1/6P T1	100	100	100	100

*) The IEC standards state as standard values for effectively earthed systems 1.5/30 sec. For systems without effective earthing with automatic earth fault tripping rated voltage factor 1.9/30 sec., and 1.9/8 hrs for systems with insulated neutral point without automatic earth fault tripping.

The above values may, depending on configuration, be extended by the use of an extra-high capacitance voltage divider (CSB). Please consult us for details.

The above values are total maximum values for the secondary winding(s), voltage 100/√3 or 110/√3 V and one or no residual voltage winding, class 3P, intended for connection in open delta, voltage 100 or 110 (100/3 or 110/3) V.

For other configurations please consult us. If the transformer has more than one continuously loaded winding, possibly with different classes, the table above must be applied to the sum of these burdens and the most accurate class.

Since the residual voltage winding is not loaded except during a fault, the effect of its load on the accuracy of the other windings is disregarded in accordance with IEC.

Stated values should only be considered as maximum values. Please note that modern meters and protection require much lower burdens than those above, and to achieve best accuracy you should avoid specifying burdens higher than necessary: see page B-3.

Dimensions

Capacitor Voltage Transformer CPA

Type	Number of capacitor units	A Total height	B Flashover distance	C Height to flange*)	D Mounting hole distance	E Ground level height
		mm	mm	mm	mm	mm
CPA 72	1	1660	700	340	335	740
CPA 123	1	1940	980	340	335	740
CPA 145	1	2150**)	1190**)	340	335	740
CPA 170	1	2360	1400	340	335	740
CPA 245	1	2920**)	1960**)	340	335	740
CPA 300	2	3690**)	2380**)	340	335	740
CPA 362	2	4110	2800	340	335	740
CPA 420	2	4530	3220	340	335	740
CPA 550	2	5510	4200	340	335	740

* Valid for standard terminal box only. ** Valid for high capacitance only.

Capacitor Voltage Transformer CPB

Type	Number of capacitor units	A Total height	B Flashover distance	C Height to flange*)	D Mounting hole distance	E Ground level height
		mm	mm	mm	mm	mm
CPB 72	1	1715	700	390	410	790
CPB 123	1	1995	980	390	410	790
CPB 145	1	2205**)	1190**)	390	410	790
CPB 170	1	2415	1400	390	410	790
CPB 245	1	2975**)	1960**)	390	410	790
CPB 300	2	3745**)	2380**)	390	410	790
CPB 362	2	4165	2800	390	410	790
CPB 420	2	4585	3220	390	410	790
CPB 550	2	5565	4200	390	410	790
CPB 800	3	8015	6300	390	410	790

*) Valid for standard terminal box only.
**) Valid for high capacitance only.

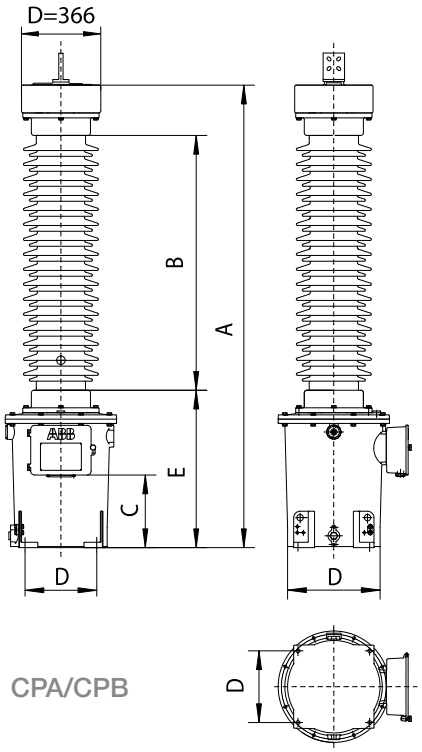

CPA/CPB

Design Data and Dimensions

Coupling Capacitors

Coupling capacitors types CCA (standard capacitance) and CCB (extra high capacitance) are intended for power line carrier applications. The insulator and capacitor design are identical to capacitor voltage dividers type CSA and CSB, but without an intermediate voltage terminal. Previous descriptions of the voltage divider are therefore applicable for the coupling capacitors. Other capacitance values than those listed below are available on request.

A line trap can in most cases be mounted directly on top of the coupling capacitor. Primary terminal according to ABB standard (see page I-3), as well as insulators for the pedestrial mounting are part of the delivery. Test values are shown in page I-5 for the different designs.

Modern PLC equipment is adapted for a wide range of coupling capacitors. No specific capacitance is required. Only minimum capacitance must be specified due to choice of frequency.

Type	Number of capacitor units	Standard capacitance pF (+10; -5%)	Extra high capacitance pF (+10; -5%)	A Total height	Flashover and creepage distances
		CCA	CCB	mm	
CCA 72	1	23500	-	1140	Please see previous page, table “Nominal capacitance, flashover- and creepage distance”
CCA 123	1	14500	-	1420	
CCA/CCB 145	1	12600	18900	1630/1840	
CCA/CCB 170	1	10500	15700	1840/1840	
CCA/CCB 245	1	7500	11300	2400/2540	
CCA/CCB 300	2	6300	9400	3170/3590	
CCA/CCB 362	2	5200	7900	3590/3590	
CCA/CCB 420	2	4700	7100	4010/4010	
CCA/CCB 550	2	3500	5200	4990/4990	

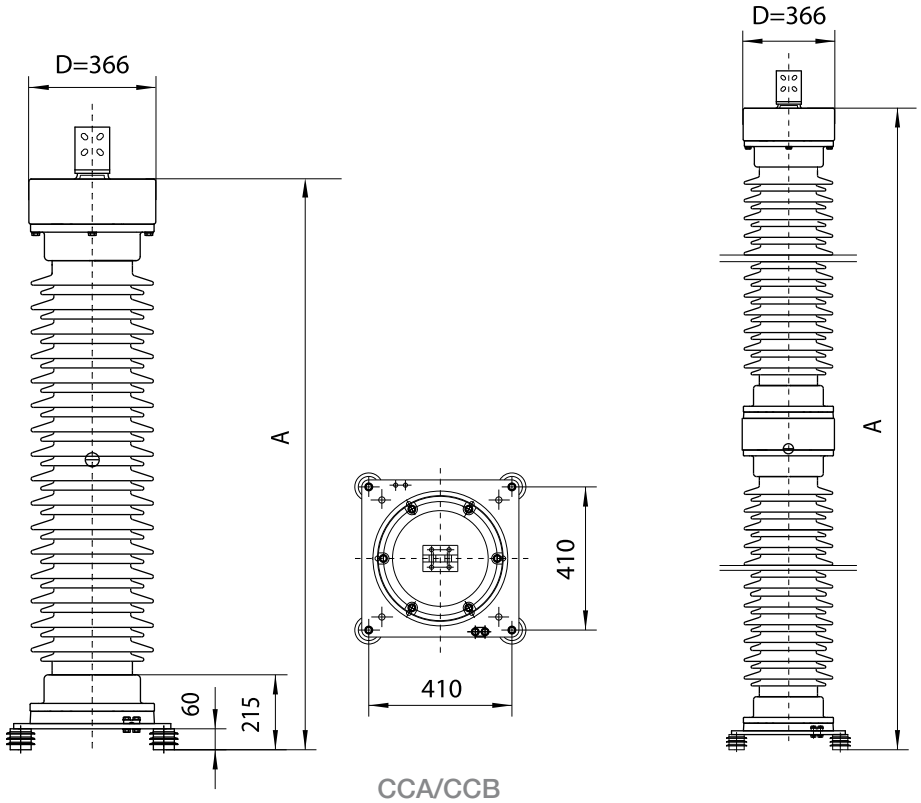

CCA/CCB

Shipping Data CPA and CPB

Capacitor Voltage Transformers CPA

Type	Net weight incl. oil	Oil	Shipping weight 3-pack	Shipping dimensions 3-pack	Shipping volume, 3-pack/Total
	kg*	kg*	kg*	LxWxH m	m^3
CPA 72	320	73	1085	1.73x0.74x1.93	2.5[1)]
CPA 123	350	74	1185	1.73x0.74x2.21	2.8[1)]
CPA 145	370	76	1255	1.73x0.74x2.42	3.1[1)]
CPA 170	390	78	1320	1.73x0.74x2.54	3.3[1)]
CPA 245	450	82	3 x 635	3 x (3.11x0.69x0.91)	3 x 2.0[2)]
CPA 300	520	97	1235 + 655	1.73x0.74x2.42 + 1.82x1.55x0.80	3.1 + 2.3[3)]
CPA 362	565	100	1305 + 750	1.73x0.74x2.54 + 2.03x1.55x0.80	3.3 + 2.5[3)]
CPA 420	610	105	1385 + 835	1.73x0.74x2.81 + 2.24x1.55x0.80	3.6 + 2.8[3)]
CPA 550	710	111	3x650 + 1035	3 x (3.25x0.69x0.91) + 2.79x1.55x0.80	3 x 2.0 + 3.5[4)]

Capacitor Voltage Transformers CPB

Type	Net weight incl. oil	Oil	Shipping weight 3-pack	Shipping dimensions 3-pack	Shipping volume, 3-pack/Total
	kg*	kg*	kg*	LxWxH m	m^3
CPB 72	425	95	1440	2.06x0.90x2.00	3.7[1)]
CPB 123	455	96	1550	2.06x0.90x2.49	4.6[1)]
CPB 145	475	98	1610	2.06x0.90x2.49	4,6[1)]
CPB 170	495	100	1675	2.06x0.90x2.70	5.0[1)]
CPB 245	555	104	3 x 755	3 x (3.21x0.80x1.01)	3 x 2.6[2)]
CPB 300	625	119	1590 + 670	2.06x0.90x2.49 + 1.82x1.55x0.80	4.6 + 2.3[3)]
CPB 362	670	122	1660 + 750	2.06x0.90x2.70 + 2.03x1.55x0.80	5.0 + 2.5[3)]
CPB 420	715	127	1735 + 835	2.06x0.90x2.91 + 2.24x1.55x0.80	5.4 + 2.8[3)]
CPB 550	815	133	3 x 770 + 1035	3 x (3.35x0.80x1.01) + 2.79x1.55x0.80	3 x 2.7 + 3.5[4)]
CPB 800	1065	161	3x770 + 2x1025	3 x (3.35x0.80x1.01) + 2 x (2.79x1.55x0.80)	3 x 2.7 + 2 x 3.5[4)]

1) Vertical 3-pack
2) Horizontal 1-pack (normally, due to transport height)
3) Bottom part vertical 3-pack; top part horizontal 3-pack
4) Bottom part horizontal 1-pack; top part horizontal 3-pack (normally, due to transport height)

*) The weights for extra high capacitance CVTs are 5 to 10% higher, but the shipping volumes are the same as for standard capacitance CVTs.

Shipping Data CCA and CCB

Coupling Capacitors CCA

Type	Net weight incl. oil	Oil	Shipping weight 3-pack	Shipping dimensions 3-pack	Shipping volume 3-pack/Total
	kg*	kg*	kg*	LxWxH m	m^3
CCA 72	135	18	565	1.33x1.55x0.80	1.6[5)]
CCA 123	165	19	675	1.61x1.55x0.80	2.0[5)]
CCA 145	180	21	735	1.82x1.55x0.80	2.3[5)]
CCA 170	205	23	825	2.03x1.55x0.80	2.5[5)]
CCA 245	265	27	1060	2.59x1.55x0.80	3.2[5)]
CCA 300	335	42	730 + 670	2x(1.82x1.55x0.80)	2.3 + 2.3[6)]
CCA 362	380	45	810 + 750	2x(2.03x1.55x0.80)	2.5 + 2.5[6)]
CCA 420	425	50	895 + 835	2x(2.24x1.55x0.80)	2.8 + 2.8[6)]
CCA 550	525	56	1095 + 1035	2x(2.79x1.55x0.80)	3.5 + 3.5[6)]

Coupling Capacitors CCB

Type	Net weight incl. oil	Oil	Shipping weight 3-pack	Shipping dimensions 3-pack	Shipping volume 3-pack/Total
	kg*	kg*	kg*	LxWxH m	m^3
CCB 145	240	32	930	2.03x1.55x0.80	2.5[5)]
CCB 170	240	29	930	2.03x1.55x0,80	2.5[5)]
CCB 245	315	36	1220	2.79x1.55x0.80	3.5[5)]
CCB 300	455	65	925 + 865	2x(2.03x1.55x0.80)	2.5 + 2.5[6)]
CCB 362	455	58	925 + 865	2x(2.03x1.55x0.80)	2.5 + 2.5[6)]
CCB 420	505	64	1015 + 955	2x(2.24x1.55x0.80)	2.8 + 2.8[6)]
CCB 550	635	74	1260 + 1200	2x(2.79x1.55x0.80)	3.5 + 3.5[6)]

5) Normally, coupling capacitors are packed in horizontal 3-pack

6) Top and bottom part(s) are packed in two cases, horizontal 3-pack

Capacitor Voltage Transformer Type CPA and CPB (IEC)

Schematic Diagram of Capacitor Voltage Transformer

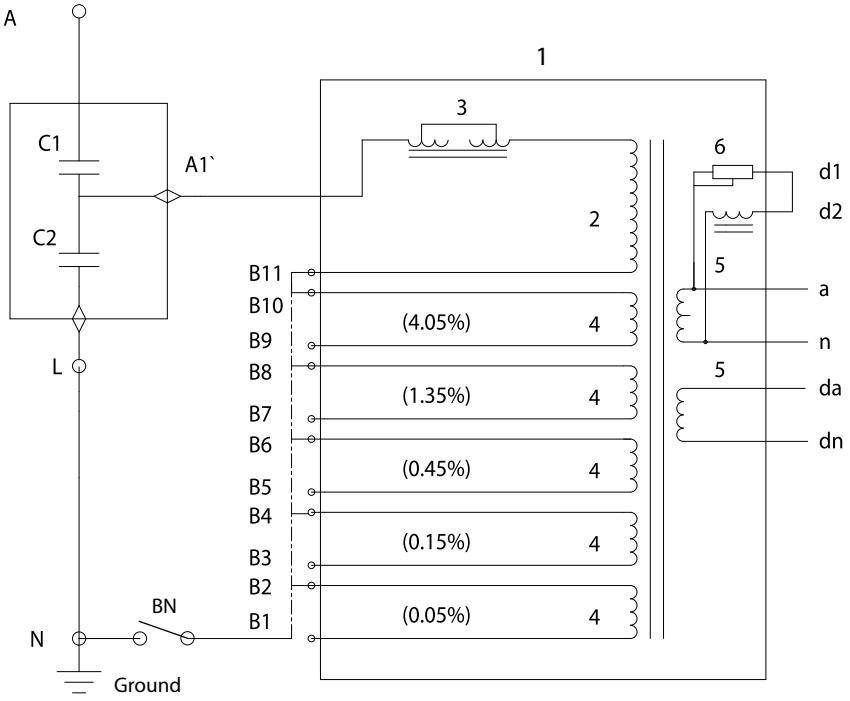

1 Electromagnetic unit (EMU): Intermediate voltage transformer with compensating reactor
2 Primary winding of the intermediate voltage transformer
3 Compensating reactor
4 Adjustment windings
5 Secondary windings
6 Ferro-resonance damping circuit

Option – Carrier Accessories

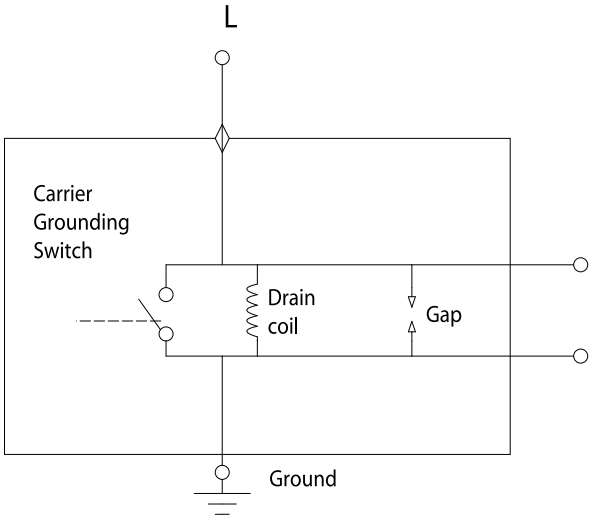

Drain coil available for 12, 24 or 48 mH.

Customer's Notes

Capacitor Voltage Transformer CPA and CPB (ANSI)

For revenue metering and protection in high voltage networks. The overall design of the CVT and the mixed dielectric in the capacitor elements have proven to be insensitive to temperature changes, and the accuracy is equivalent to inductive voltage transformers. These CVTs are designed for widely shifting conditions, from polar to desert climates.

The CPA and CPB have a high Quality Factor, as a result of their comparatively high capacitance, combined with a high intermediate voltage.
The Quality Factor = $C_{equivalent} \times U^2_{intermediate}$ is a measure of the accuracy stability. The higher this factor, the better the accuracy, and the better the transient response.

Brief Performance Data

Installation	Outdoor
Design	Capacitor type Meets ANSI standards
Insulation	
CVD	Aluminum-foil/paper/ poly-propylene film, synthetic oil
EMU	Paper - mineral oil
System voltage Nominal	69-500 (765) kV
Insulators	Porcelain - on request silicon rubber (SIR)
Creepage distance	≥ 25 mm/kV (longer on request)
Service conditions	
Ambient temperature	-40 °C to +40 °C (others on request)
Design altitude	Maximum 1000 m (others on request)

Capacitor Voltage Transformer CPA and CPB (ANSI)

Material
All external metal surfaces are made of an aluminum alloy, resistant to most known environment factors. Bolts, nuts, etc. are made of acid-proof steel. The aluminum surfaces do not normally need painting. We can, however, offer a protective paint, normally light gray.

Creepage Distance
As standard, the CPA and CPB are offered with creepage distance 25 mm/kV. Longer creepage distances can be offered on request.

Silicone Rubber Insulators
The complete ranges of the CVT and CC are available with silicone rubber (SIR) insulators. Our SIR insulators are produced with a patented helical extrusion molding technique, which gives completely joint-free insulators with outstanding performance. All CVTs and CCs with this type of insulators have the same high creepage distance, 25 mm/kV, as porcelain.

Mechanical Stability
The mechanical stability gives a sufficient safety margin for normal wind loads and conductor forces. In most cases, with help of the optional top plate, it is also possible to mount line traps for power line carrier equipment directly on top of the capacitor divider. The CPA and CPB will also withstand most cases of seismic stress.

Ferroresonance Damping Circuit
All CVTs need to incorporate some kind of ferro-resonance damping, since the capacitance in the voltage divider, in series with the inductance of the transformer and the series reactor, constitutes a tuned resonance circuit.

This circuit can be brought into resonance, that may saturate the iron core of the transformer, by various disturbances in the network. This phenomenon can also overheat the electromagnetic unit or lead to insulation breakdown.

The CPA and CPB use a damping circuit, connected in parallel with one of the secondary windings (see scheme in page J-9).

The damping circuit consists of a reactor with an iron core, and an oil-cooled resistor in series. Under normal use, the iron core of the damping reactor is not saturated, yielding high impedance, so that practically no current is flows through this circuit.

The damping circuit has two bridged terminals; d1- d2, behind a sealed covering hood in the terminal box. In particular cases and after agreement this bridge can be opened, to check that the circuit is intact, by resistance measurement.

Ratio Adjustment
The transformer of the electromagnetic unit has five adjustment windings on the ground side of the primary winding. The numbers of turns of these windings have been chosen so that the ratio can be adjusted ±6.05% in steps of 0.05%. These windings are externally accessible behind a sealed covering hood in the secondary terminal box. The CVT is delivered adjusted for a specified burden and class, and normally no further adjustment is necessary. If needed, the adjustment windings enable exchange of the voltage divider on site, and readjust the transformer for the new combination of voltage divider/ electromagnetic unit.

Rating Plates
Corrosion resistant rating plates with text and wiring diagrams are used. General data can be found on the door of the terminal box, connection diagrams and secondary winding data on the inside.

The capacitors are marked with measured capacitance on the lower insulator flange(s).

Potential Grounding Switch
A potential grounding switch can be included in the EMU.

Power Line Carrier (PLC)
As an option all CVTs can be equipped with Carrier Accessories. Modern PLC equipments are adapted for a wide range of coupling capacitors. No specific capacitance is required. Only minimum capacitance must be specified due to choice of frequency.

Capacitor Voltage Transformer CPA and CPB (ANSI)

Primary Terminal

The CPA and CPB are normally delivered with an aluminum NEMA pad, suitable for connecting normal aluminum cable clamps. Other primary terminals can be offered on request, such as an aluminum round stud, Ø=30 mm.

On request a top plate can be provided and drilled with four bolt holes 5/8” UNC, on a 5” circle in case a line trap is to be mounted.

Maximum static force on the primary terminal is 340 lbf (1,500 N) in all directions. Maximum dynamic force is 475 lbf (2,100 N.)
(Maximum static/dynamic force is 295/412 lbf for CPB 800)

Our design is corona free and corona rings are not needed, but are available on request.

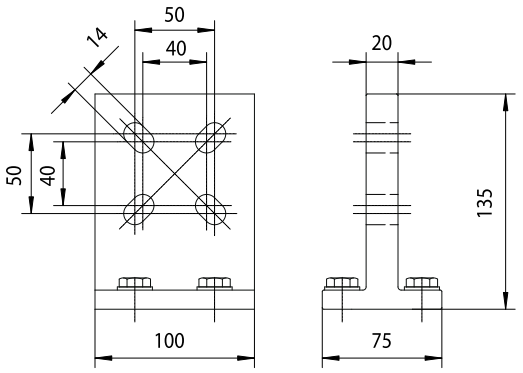

Secondary Terminal Box and Secondary Terminals

The transformer is equipped with a secon-dary terminal box, protection class IP 55. This box is equipped with a detachable,
undrilled gland plate, which on installation can be drilled for cable bushings. The box is provided with a drain. The transformer can also be equipped with a larger terminal box, with space for fuses or micro circuit breakers and/or protection for power line carrier equipment.
The secondary terminals normally consist of Phoenix standard terminal blocks for wire cross-section ≥ 3/8” (10 mm^2). In the terminal box are also terminals (d1-d2) for damping circuit, terminals for the adjustment windings (B1 - B10) and the capacitor low voltage terminal ”L” (for power line carrier equipment). Terminals d1 - d2 and B1 - B10 are intended for factory settings and thus located behind a sealed covering hood to prevent inadvertent reconnection.

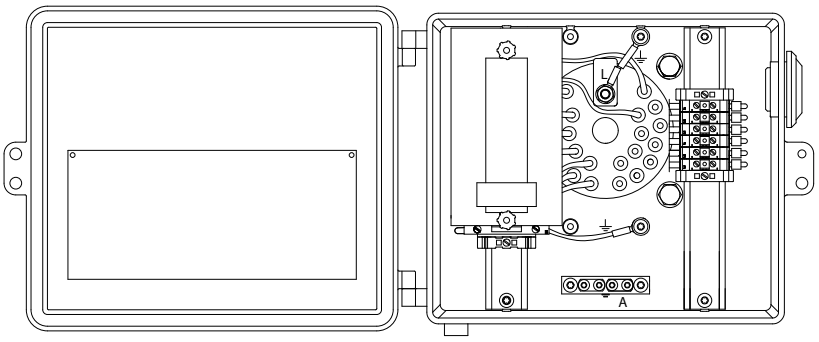

The ”L” terminal must always be grounded if no carrier equipment is connected.

Ground Terminals

The transformer is normally equipped with a ground clamp with a cap of nickel-plated brass, for conductor # 2 SOL to 500 MCM (diameters 8-16 mm), which can be moved to either mounting foot. Grounding terminals for the secondary circuits are placed inside the terminal box.

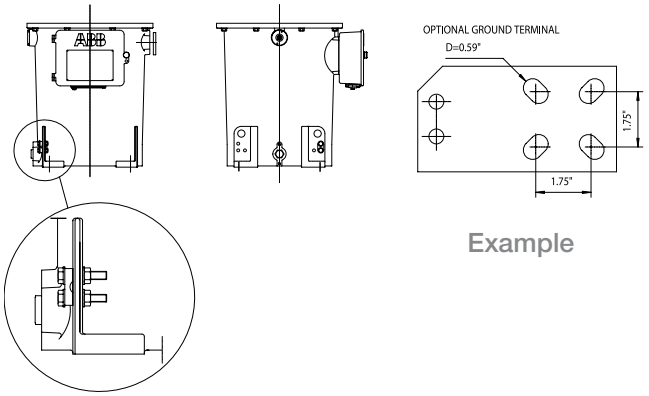

Example

Installation and Maintenance (ANSI)

Unpacking

Please check the crates and their contents for damage during transportation upon receipt. Should there be any damage, please contact ABB for advice before the goods are handled further. Any damage should be documented (photographed).

Assembly

The electromagnetic unit and the capacitor voltage divider are delivered as one unit for CVTs with system voltages up to 230 kV.

CVTs with higher system voltages, having more than one CVD part, are delivered with the bottom unit of the CVD assembled onto the EMU.

The EMU, with the bottom CVD unit should be installed first, before the top part(s) of the CVD is (are) mounted in place. Lifting instructions are included in each package.

Check that the top and the bottom insulator have the same serial number (for CVDs with more than one capacitor unit).

Maintenance

The CPA and CPB are designed for a service life of more than 30 years, and are practically maintenance-free. We recommend however the following checks and measures.

- **Visual Check**

We recommend a period inspection, to check for oil leakages and also to inspect the insulator for collection of dirt.

- **Control measurements of the CVD**

Since the voltage dividers are permanently sealed under slight overpressure it is not possible to take oil samples from them.

Under normal service conditions, no noticeable ageing will occur within the capacitors (verified by ageing tests). However discrepancies between the secondary voltages in parallel phases can be an indication of a fault in a capacitor part of one of the voltage transformers, which is why such a comparison is recommended. In such a case a further measurement of the capacitance value is recommended. Readings can be taken between the top and the ”L” terminal in the secondary terminal box.

- **Control measurements of the EMU**

A simple test is to measure the insulation resistance in mega-ohms (max. test voltage 1,000 VDC) of the secondary windings.

Since the high voltage winding of the transformer is not capacitively graded, a measurement of the loss angle (tan delta) will give no significant result.

What is possible, however, is to take an oil sample, for gas chromatography analysis from the electromagnetic unit to assess its condition.

The tank of the electromagnetic unit can, on request, be equipped with a sampling valve, and we can deliver suitable sampling equipment. A simpler method is to take the oil sample from the oil-filling hole. Sampling intervals will vary, depending on service conditions; generally, no oil analysis should be necessary during the first 20 years of service.

Environmental Aspects

Impregnant

Both Faradol 810 (the synthetic oil in the voltage dividers), and Nynäs NYTRO 10 XN (the standard transformer oil in the electromagnetic unit) are free from PCB and other strongly harmful substances, and pose a low impact to the environment.

Destruction

After draining the oils, they can be burnt in an appropriate plant. In this respect, Faradol has similar combustion properties as normal mineral oil.

The disposal should be carried out in accordance with local legal provisions, laws and regulations.

The porcelain can be deposited after it has been crushed.

The metals in the electromagnetic unit, and the housings of the voltage divider can be recycled. Aluminum parts are labeled with material specification. In order to recycle the copper in the windings, the oil-saturated paper insulation should be burnt.

The aluminum in the capacitor elements, with their combination of foil, paper and polypropylene film can be reclaimed after the insulation has been burnt; the plastic film will not emit any harmful substances during this process.

Design Data According to ANSI

Number of capacitor units, capacitance, flash-over and creepage distance (CSA, standard capacitance) (also valid for CCA)

Type	Number of capacitor units	Standard capacitance	Normal porcelain (min. nom. values)		Porcelain with long creepage distance (min. nom. values)
			Striking distance (min.)	Leaking distance	
		pF (+10; -5 %)	mm (inches)	mm (inches)	
CPA/CPB 72	1	23500	700 (28)	2200 (86)	Offered on request
CPA/CPB 123	1	14500	980 (39)	3160 (124)	
CPA/CPB 145	1	12600	1190 (47)	3880 (153)	
CPA/CPB 170	1	10500	1400 (55)	4600 (182)	
CPA/CPB 245	1	7500	1960 (77)	6510 (256)	
CPA/CPB 420	2	4700	3220 (127)	10630 (420)	
CPA/CPB 550	2	3500	4200 (166)	13980 (551)	

Number of capacitor units, capacitance, flash-over and creepage distance (CSB, extra high capacitance) (also valid for CCB)

Type	Number of capacitor units	Extra high capacitance	Normal porcelain (min. nom. values)		Porcelain with long creepage distance (min. nom. values)
			Striking distance (min.)	Leaking distance	
		pF (+10; -5 %)	mm (inches)	mm (inches)	
CPA/CPB 145	1	18900	1400 (56)	4600 (182)	Offered on request
CPA/CPB 170	1	15700	1400 (56)	4600 (182)	
CPA/CPB 245	1	11300	2100 (83)	6990 (276)	
CPA/CPB 420	2	7100	3220 (127)	10630 (420)	
CPA/CPB 550	2	5200	4200 (166)	13980 (551)	

Test Voltages: ANSI C93.1 - 1999

Type	Nominal system voltage	Max rated voltage	AC test Dry, 1min	AC test Wet, 10 sec	BIL 1.2/50 µs	RIV test voltage	RIV level
	kV L-L[1)]	kV L-G	kV	kV	kV	kV	µV
CPA/CPB 72	69	42	165	140	350	42	125
CPA/CPB 123	115	70	265	230	550	70	250
CPA/CPB 145	138	84	320	275	650	84	250
CPA/CPB 170	161	98	370	325	750	98	250
CPA/CPB 245	230	140	525	460	1050	140	250
CPA/CPB 420	345	209	785	680	1550	209	250
CPA/CPB 550	500	318	900	780	1800	318	500

Test voltages above are valid for altitudes ≤ 3300 feet above sea level.

Design Data According to ANSI

(The data in the tables below are ABB standard values. Other data can be offered on request)

Accuracy

The CPA is offered for 0.6R or 1.2R relay accuracy class and CPB for 0.3 or 0.6 metering accuracy class. It can be supplied with two tapped windings, X and Y, or with three tapped windings X, Y and Z.

CPA with standard capacitance	Metering Secondary volt 115V: Tap V	Relaying Secondary volt 115V:115/√3V	Winding X1-X2, X2-X3 Y1-Y2, Y2-Y3		Winding X1-X2, X2-X3 Y1-Y2, Y2-Y3		Aux. winding Optional Z1-Z3, Z2-Z3		Thermal burden
	Ratio	Ratio	Class	Burden[1)]	Class	Burden[1)]	Class	Burden[1)]	VA
CPA 72	350/600:1:1	(346/600:1:1)	0.6R	0-200VA	1.2R	0-400VA	1.2R	0-75VA	600
CPA 123	600/1000:1:1	(577/1000:1:1)	0.6R	0-200VA	1.2R	0-400VA	1.2R	0-75VA	600
CPA 145	700/1200:1:1	(693/1200:1:1)	0.6R	0-200VA	1.2R	0-400VA	1.2R	0-75VA	600
CPA 170	800/1400:1:1	(808/1400:1:1)	0.6R	0-200VA	1.2R	0-400VA	1.2R	0-75VA	600
CPA 245	1200/2000:1:1	(1155/2000:1:1)	0.6R	0-200VA	1.2R	0-400VA	1.2R	0-75VA	600
CPA 420	1800/3000:1:1	(1732/3000:1:1)	0.6R	0-200VA	1.2R	0-400VA	1.2R	0-75VA	600
CPA 550	2500/4500:1:1	(2511/4350:1:1)	0.6R	0-200VA	1.2R	0-400VA	1.2R	0-75VA	600

1) The total simultaneous burden (X+Y+Z) is not to exceed values given for each main winding. All burdens are factory set.

CPB with extra high capacitance	Metering Secondary volt 115V: Tap V	Relaying Secondary volt 115V:115/√3V	Winding X1-X2, X2-X3 Y1-Y2, Y2-Y3		Winding X1-X2, X2-X3 Y1-Y2, Y2-Y3		Aux. winding Optional Z1-Z3, Z2-Z3		Thermal burden
	Ratio	Ratio	Class	Burden[1)]	Class	Burden[1)]	Class	Burden[1)]	VA
CPB 145	700/1200:1:1	-	0.3	0-200VA	0.6	0-200VA	1.2R	0-75VA	600
CPB 170	800/1400:1:1	-	0.3	0-200VA	0.6	0-200VA	1.2R	0-75VA	600
CPB 245	1200/2000:1:1	-	0.3	0-200VA	0.6	0-200VA	1.2R	0-75VA	600
CPB 420	1800/3000:1:1	-	0.3	0-200VA	0.6	0-200VA	1.2R	0-75VA	600
CPB 550	2500/4500:1:1	-	0.3	0-200VA	0.6	0-200VA	1.2R	0-75VA	600

1) The total simultaneous burden (X+Y+Z) is not to exceed values given for each main winding. All burdens are factory set.

CPA/CPB	Metering performance		Relaying performance	
	Ratio	Perf. ref. Voltage [2)]	Ratio	Perf. ref. Voltage [2)]
CPA 72	350/600:1:1	40.25 kV L-G	(346/600:1:1)	69/√3 kV
CPA 123	600/1000:1:1	69 kV L-G	(577/1000:1:1)	115/√3 kV
CPA/CPB 145	700/1200:1:1	80.5 kV L-G	(693/1200:1:1)	138/√3 kV
CPA/CPB 170	800/1400:1:1	92 kV L-G	(808/1400:1:1)	161/√3 kV
CPA/CPB 245	1200/2000:1:1	138 kV L-G	(1155/2000:1:1)	230/√3 kV
CPA/CPB 420	1800/3000:1:1	207kV L-G	(1732/3000:1:1)	345/√3 kV
CPA/CPB 550	2500/4500:1:1	287.5 kV L-G	(2510/4348:1:1)	500/√3 kV

2) Application of the “performance reference voltage” between phase and ground will result in 115 V secondary winding having lower ratio.

Rated burdens

W = 12.5 VA power factor 0.1, X = 25 VA power factor 0.7, Y = 75 VA power factor 0.85
YY = 150 VA power factor 0.85, Z = 200 VA power factor 0.85, ZZ = 400 VA power factor 0.85

Coupling Capacitors

Coupling capacitors types CCA (standard capacitance) and CCB (extra high capacitance) are intended for power line carrier applications. The insulator and capacitor design are identical to capacitor voltage dividers type CSA and CSB, but without an intermediate voltage terminal.
Descriptions of the voltage divider are in the IEC catalog for the CVT.

Dimensions

Capacitor Voltage Transformer CPA

Type	Number of capacitor units	A Total height	B Striking distance	C Height to flange *)	D Mounting hole distance	E Ground level height
		mm (in)	mm (in)	mm (in)	mm (in)	mm (in)
CPA 72	1	1660 (65”)	700 (28”)	340 (13”)	335 (13”)	740 (29”)
CPA 123	1	1940 (76”)	980 (39”)	340 (13”)	335 (13”)	740 (29”)
CPA 145	1	2150 (85”)**)	1190 (47”)**)	340 (13”)	335 (13”)	740 (29”)
CPA 170	1	2360 (93”)	1400 (55”)	340 (13”)	335 (13”)	740 (29”)
CPA 245	1	2920 (115”)**)	1960 (77”)**)	340 (13”)	335 (13”)	740 (29”)
CPA 420	2	4530 (178”)	3220 (127”)	340 (13”)	335 (13”)	740 (29”)
CPA 550	2	5510 (217”)	4200 (165”)	340 (13”)	335 (13”)	740 (29”)

* Valid for standard terminal box only. ** Valid for standard capacitance only.

Capacitor Voltage Transformer CPB

Type	Number of capacitor units	A Total height	B Striking distance	C Height to flange *)	D Mounting hole distance	E Ground level height
		mm (in)	mm (in)	mm (in)	mm (in)	mm (in)
CPB 72	1	1715 (68”)	700 (28”)	390 (15”)	410 (17”)	790 (31”)
CPB 123	1	1995 (79”)	980 (39”)	390 (15”)	410 (17”)	790 (31”)
CPB 145	1	2205 (87”)**)	1190 (47”)**)	390 (15”)	410 (17”)	790 (31”)
CPB 170	1	2415 (95”)	1400 (55”)	390 (15”)	410 (17”)	790 (31”)
CPB 245	1	2975 (123”)**)	2100 (83”)**)	390 (15”)	410 (17”)	790 (31”)
CPB 420	2	4585 (181”)	3220 (127”)	390 (15”)	410 (17”)	790 (31”)
CPB 550	2	5565 (219”)	4200 (165”)	390 (15”)	410 (17”)	790 (31”)

* Valid for standard terminal box only.
** Valid for standard capacitance only.

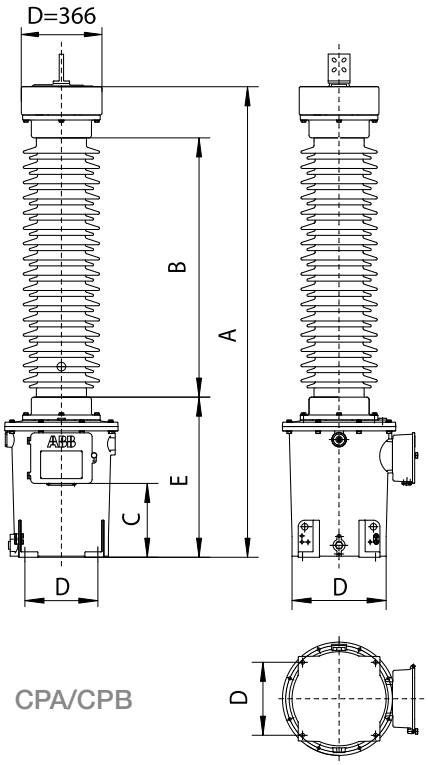

Shipping Data (ANSI)

Capacitor Voltage Transformers CPA

Type	Net weight incl. oil *)	Oil *)	Shipping weight * 3-pack)	Shipping dimensions 3-pack LxWxH	Shipping volume 3-pack Total
	kg	kg	kg	m	m^3
CPA 72	320	73	1085	1.73x0.74x1.93	2.5[1)]
CPA 123	350	74	1185	1.73x0.74x2.21	2.8[1)]
CPA 145	370	76	1255	1.73x0.74x2.42	3.1[1)]
CPA 170	390	78	1320	1.73x0.74x2.54	3.3[1)]
CPA 245	450	82	3 x 635	3 x (3.11x0.69x0.91)	3 x 2.0[2)]
CPA 420	715	127	1735 + 835	2.06x0.90x2.91 + 2.24x1.55x0.80	5.4 + 2.8[3)]
CPA 550	815	133	3 x 770 + 1035	3 x (3.35x0.80x1.01) + 2.79x1.55x0.80	3 x 2.7 + 3.5[4)]

Capacitor Voltage Transformers CPB

Type	Net weight incl. oil *)	Oil *)	Shipping weight *) 3-pack	Shipping dimensions 3-pack LxWxH	Shipping volume 3-pack Total
	kg	kg	kg	m	m^3
CPB 72	425	95	1440	2.06x0.90x2.00	3.7[1)]
CPB 123	455	96	1550	2.06x0.90x2.49	4.6[1)]
CPB 145	475	98	1610	2.06x0.90x2.49	4.6[1)]
CPB 170	495	100	1675	2.06x0.90x2.70	5.0[1)]
CPB 245	555	104	3 x 755	3 x (3.21x0.80x1.01)	3 x 2.6[2)]
CPB 420	715	127	1735 + 835	2.06x0.90x2.91 + 2.24x1.55x0.80	5.4 + 2.8[3)]
CPB 550	815	133	3 x 770 + 1035	3 x (3.35x0.80x1.01) + 2.79x1.55x0.80	3 x 2.7 + 3.5[4)]

*) The weights for extra high capacitance CVTs are 5 to 10% higher, but the shipping volumes are the same as for standard capacitance CVTs

1) Vertical 3-pack
2) Horizontal 1-pack (normally, due to transport height)
3) Bottom part vertical 3-pack; top part horizontal 3-pack
4) Bottom part horizontal 1-pack; top part horizontal 3-pack (normally, due to transport height)

Capacitor Voltage Transformer CPA and CPB (ANSI)

Schematic Diagram of Capacitor Voltage Transformer

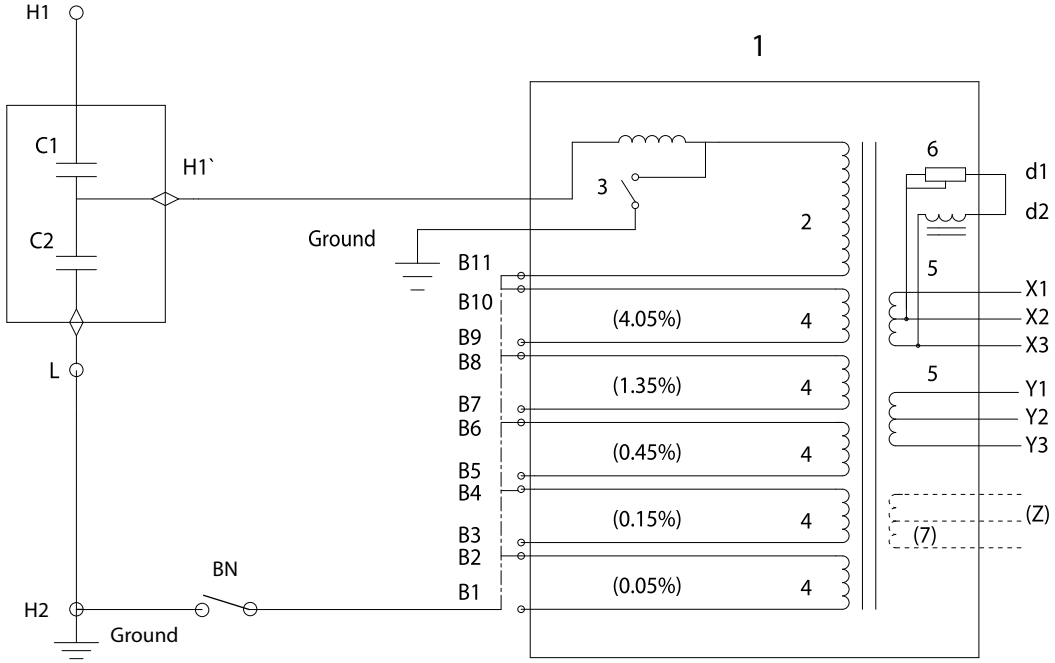

1. Electromagnetic unit (EMU)
2. Primary winding of the intermediate voltage transformer
3. Potential grounding switch and choke coil (option)
4. Adjustment windings (B1-B10)
5. Secondary windings X and Y
6. Ferroresonance damping circuit
7. Auxiliary winding Z (option)

Option – Carrier Accessories

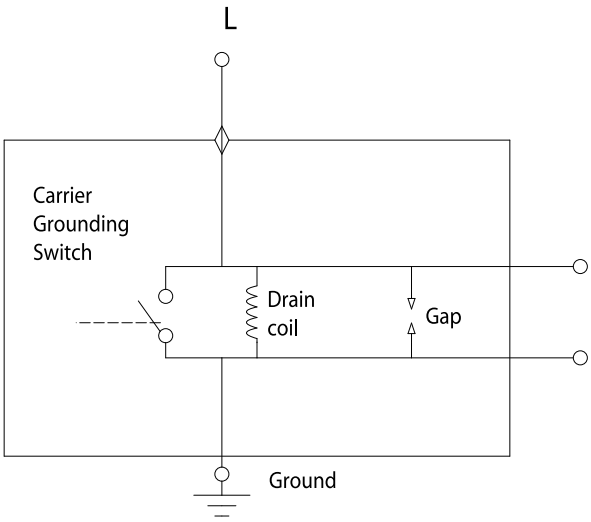

Drain coil available for 12, 24 or 48 mH.

Optional - Accessories for cable installations

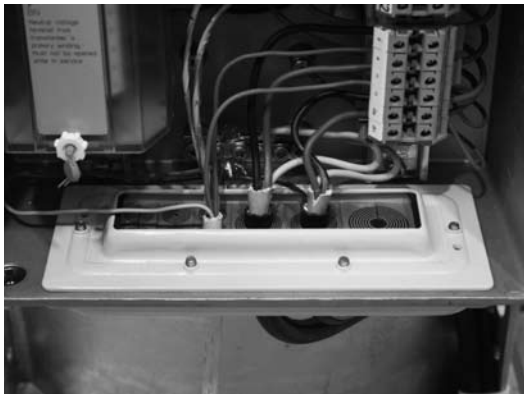

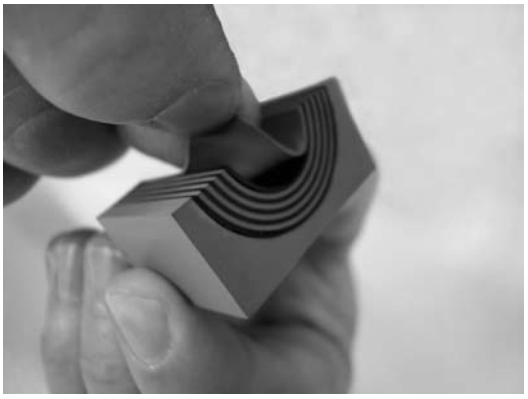

Easy installations for cables
A Roxtec CF 16 cable entry kit combines reliable sealing of cables in junction boxes with easy installations. Each CF 16 can handle several cables through the same opening.

Multidiameter
The CF 16 uses adaptable Multidiameter technology. This enables cables of a wide range of diameters to be sealed with a perfect fit, even when tolerances and deviations from nominal dimensions are considered. The modules are delivered with a center core as a substitute for a cable. This means the entry kit is adaptable to different cable sizes, and to different numbers of penetrations.

Kit Supplied
The Roxtec CF 16 kits are available in two versions: Each one with a customized set of sealing modules to suit the most common cables sizes and numbers in the junction boxes (as shown below).
For other dimensions, please contact ABB, High Voltage Products, Ludvika, Sweden.

Simple maintenance
A Roxtec CF 16 can be opened and closed repeatedly for easy installations and simple maintenance. Another benefit is a built in spare capacity for possible new cables in the future.

Benefit Summary
- Seals several cables and diameters
- Quick and easy installation
- Cable retention
- Rodent proof
- IP 66/67
- Halogen-free
- UL/NEMA 4, 4X, 12, 13
- Fire retardant material UL 94-V0

ABB CF 16 junction box kit 1
Part No.

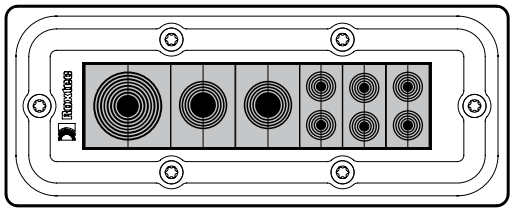

Roxtec CF 16 Kit 1: Handles maximum one 9.5-32.5 mm cable, two 10-25 mm cables and six 3.5-16.5 mm cables.

ABB CF 16 junction box kit 2
Part No.

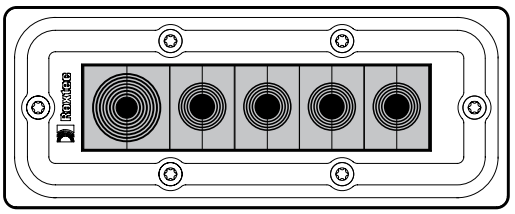

Roxtec CF 16 Kit 2: Handles maximum one 9.5-32.5 mm cable and four 10-25 mm cables.

Customer's Notes

Quality Control and Testing

ABB AB, High Voltage Products is certified by Lloyds to fulfill the requirements of ISO 9001.

Bureau Veritas Quality International (BVQI) also certifies us for Environmental Management Systems, ISO 14001 and 14024.

Type Tests

The type tests reports for tests performed on transformers types similar to customer specifications are available.

Routine Tests

The following tests are performed on each transformer as standard before delivery in accordance with applicable standards:

Routine Tests for Current Transformers IMB

IEC 60044-1 clause 6.2

a Verfication of terminal marking and polarity
b Power-frequency withstand test on primary winding
c Partial discharge measurement
d Power-frequency withstand test on secondary windings
e Power-frequency withstand test between winding sections
f Inter-turn overvoltage test on secondary windings
g Determination of errors
(One transformer in each batch is type-tested for accuracy. Remaining units at a reduced number of burdens. Complete error curves on all transformers must be ordered separately.)

IEC 60044-1 clause 6.3

Measurement of capacitance and tan delta

ABB specific tests

a Sealing test
b Measurement of secondary resistance (sample)
c Complete excitation curve for each type of core in a transformer. For the remaining transformers all cores are checked at one or two points on the excitation curve.

Routine Tests for Inductive Voltage Transformers EMF

IEC 60044-2

a Verfication of terminal marking and polarity
b Power-frequency withstand test on primary winding
(applied test, 75 Hz for one minute)
c Partial discharge measurement
d Power-frequency withstand test on secondary windings
(applied test 4 kV, 50 Hz for one minute)
e Determination of errors

ABB specific tests

a Sealing test
b Measurement of no load current I_O at $\sqrt{3}$ x rated voltage

Other standards

The tests described above also fully satisfy other standards, such as IEEE.

Test Capibilities in Ludvika

Our high resource laboratories (high power/ high voltage/environmental) in Ludvika are members of SATS (Scandinavian Association for Testing of Electric Power Equipment). SATS is a member of STL (Short Circuit Testing Liaison).

STL provides a forum for international collaboration between testing organizations. The membership and supervision of SATS ensures the independency of the laboratory.

We are able to claim that with these testing resources, we are at the forefront in developing new and safe products for the 21st century.

Routine Tests for Capacitor Voltage Transformers CPA and CPB

IEC 60044-5, § 8.2

Electromagnetic unit: e, f, g, h, j
Capacitor Voltage Divider/Coupling Capacitor: a, b, c, d, g
Capacitor Voltage Transformer: i, j

a Tightness of capacitor voltage divider (10.1)
b Capacitance and tan delta measurement at power-frequency (9.2)
c Power-frequency withstand test (10.2)
d Measurement of partial discharge (10.2.3)
e Verification of terminal markings (10.3)
f Power-frequency withstand tests on the electromagnetic unit (10.4)
g Power-frequency withstand test on low voltage terminal (10.2.4)
h Power-frequency withstand tests on secondary windings (10.4.2)
i Ferro-resonance check (10.5)
j Accuracy check (determinations of errors) (10.6)

ABB specific tests: Electromagnetic Unit

Tightness test

Inspection of damping circuit.

Routine Tests for Capacitor Voltage Transformers CPA and CPB Electromagnetic Unit

ANSI C93.1-1999, § 6.3

* Leak test
2.2.1 Dielectric test of primary winding, four times performance reference voltage (1 min.)
* Partial discharge measurement
2.2.3 Dielectric test on secondary windings and adjustment windings, 4 kV (1 min.)
* Dielectric test of low voltage terminal, 10 kV (1 min.)
* Inspection and measurement of the damping circuit
6 Verification of terminal marking and polarity.
5 Accuracy test

Capacitor Voltage Divider/Coupling Capacitor ANSI C93.1-1999, § 6.3

* Leak test
1.1 Measurement of capacitance and dissipation factor for each capacitor unit before dielectric test
2.1 Dielectric test, voltage according to table above
* Partial discharge test of each capacitor porcelain
1.2 Capacitance and dissipation factor measurement after dielectric test
* Dielectric test of low voltage terminal (1 min.)

*) ABB-Special quality check

Ordering Data

Current Transformer IMB

The following information is required with your order:

- Quantity
- Standard/Customer specification
- Frequency
- Highest voltage for equipment
- Rated insulation level

Test Voltages
- Lightning impulse 1.2/50 µs
- Power frequency dry/wet
- Switching surge 250/2500 µs (For Um ≥ 300 kV, wet)

Currents
- Ratio (primary and secondary currents)
- Reconnection (primary or/and secondary)
- Rated continuous thermal current (Rf)
- Short time current, Ith 1 sec (3 sec)
- Dynamic current, Idyn

Burden and Accuracy
- Number of cores
- For each core please state:
  Burden/class/overcurrent factor

Special Requirements
- Silicone rubber insulator (gray)
- Creepage distance (ABB standard: 25 mm/kV)
- Light gray porcelain (ABB standard: brown)
- Special primary terminals
- Special secondary terminals
- Heater
- Secondary overvoltage protection:
  (spark gaps, protection gaps)
- Anodized tank, terminal box and expansion system
  (IMB 36-170)
- 1-pack, vertical transport (IMB 36-145)
- Horizontal transport (IMB 36-145)
- Other?

Additional Requirements
- Capacitive voltage tap
- Adapter (for replacing old type IMB)
- Ambient temperature
- Height above sea level if >1000 m
  Please state “normal” system and test voltages
  according to actual standard when ≤1000 m a.s.l.
- Other requirements?

Voltage Transformer EMF

The following information is required with your order:

- Quantity
- Standard/Customer specification
- Frequency
- Highest voltage for equipment
- Rated insulation level

Test Voltages
- Lightning impulse 1.2/50 µs
- Power frequency dry/wet

Voltages
- Ratio (primary and secondary voltages)
- Reconnection (secondary)
- Voltage factor (Vf) and time

Burden and Accuracy
- Number of secondary winding(s)
- For each winding please state:
  Connection: Star or broken delta
  Burden/class

- Thermal limit burden (if requested)

Special Requirements
- Silicone rubber insulator (gray)
- Creepage distance (ABB standard: 25 mm/kV)
- Light gray porcelain (ABB standard: brown)
- Special primary terminal
- Special secondary terminals
- Secondary fuses
- Heater
- Anodized tank, terminal box and expansion system
- 1-pack vertical transport (EMF 52-84)
- 1-pack, horizontal transport (EMF 123-170)
- Other requirements?

Additional Requirements
- Ambient temperature
- Height above sea level if >1000 m
  Please state “normal” system and test voltages
  according to actual standard when ≤1000 m a.s.l.
- Other requirements?

Ordering Data

Capacitor Voltage Transformer CPA and CPB

The following information is required with your order:

- Quantity
- Standard/Customer specification
- Frequency
- Highest voltage for equipment
- Rated insulation level

Test Voltages
- Lightning impulse 1.2/50 µs
- Power frequency dry/wet
- Switching surge 250/2500 µs (For Um ≥ 300 kV, wet)

Voltages
- Ratio (primary and secondary voltages)
- Reconnection (secondary)
- Voltage factor (Vf) and time

Burden and Accuracy
- Number of secondary winding (s)
- For each winding please state:
  Connection: Star or broken delta
  Burden/class

- Thermal limit burden (if requested)

Special Requirements
- Silicone rubber insulator (gray)
- Creepage distance (ABB standard: 25 mm/kV)
- Light gray porcelain (ABB standard: brown)
- Special primary terminal
- Special secondary terminals
- Secondary fuses
- Heater
- Protection for PLC equipment
- Horizontal transport
- Other requirements?

Additional Requirements
- Capacitance - high or extra high
- Ambient temperature
- Height above sea level if >1000 m
  Please state “normal” system and test voltages according to actual standard when ≤1000 m a.s.l.
- Other requirements?

Coupling Capacitor CCA and CCB

The following information is required with your order:

- Quantity
- Standard/Customer specification
- Frequency
- Highest voltage for equipment
- Rated insulation level

Test Voltages
- Lightning impulse 1.2/50 µs
- Power frequency dry/wet
- Switching surge 250/2500 µs (For Um ≥ 300 kV, wet)

Special Requirements
- Silicone rubber insulator (gray)
- Creepage distance (ABB standard: 25 mm/kV)
- Light gray porcelain (ABB standard: brown)
- Special primary terminal

Additional Requirements
- Capacitance - high or extra high
- Ambient temperature
- Height above sea level if >1000 m
  Please state “normal” system and test voltages according to actual standard when ≤1000 m a.s.l.
- Other requirements?

NOTE: ABB AB is working continuously to improve the products. We therefore reserve the right to change designs, dimensions and data without prior notice.

ABB AB
High Voltage Products
SE-771 80 LUDVIKA, Sweden
Phone +46 240 78 20 00
Fax +46 240 78 36 50
E-mail: instr.transf@se.abb.com
Internet: http://www.abb.com