Contents Page

Introduction to functions 6–11

Documentation structure 6–11

Function blocks 6–11

Function block diagrams 6–12

Signal lists 6–12

Setttings tables..... 6–12

Control 6–15
Apparatus control 6–15
Application 6–15
Theory of operation 6–16
General 6–16
Operator place 6–16
Selection and reservation 6–17
Manual updating of indications 6–19
Blockings 6–19
Command supervision 6–20
Supervision of operating apparatus 6–20
Synchro-check 6–20
Design 6–22
General 6–22
Overview 6–23
Command sequences 6–24
Standard modules 6–27
AUTHALL 6–27
L(S)_APPCMD 6–29
L_APPRSP 6–30
RSV_I 6–31
BAYRES 6–33
COMCON 6–36
PI 6–39
POSIND 6–41
SWICON 6–43
Configurations 6–46
Connections to other functions 6–46
Reservation function 6–46
Interlocking 6–53
Synchrocheck 6–54
Autoreclosing 6–55
Appendix 6–56
Function blocks 6–56
AUTHALL 6–56
L_APPCMD 6–56
S_APPCMD 6–57
L_APPRSP 6–58
RSV_I 6–59
BAYRES 6–59
COMCON 6–60
PI 6–61
POSIND 6–61
SWICON 6–62
Signal lists 6–63
AUTHALL 6–63
L_APPCMD 6–63
S_APPCMD 6–64
L_APPRSP 6–65
RSV_I 6–67
BAYRES 6–67

COMCON 6–68
PI 6–70
POSIND 6–72
SWICON 6–75
Setting tables 6–76

Interlocking 6–79

Application 6–79
Theory of operation 6–80
Design 6–83
General 6–83
Standard modules 6–83
Line for double and transfer busbars, ABC_LINE 6–83
Bus coupler for double and transfer busbars, ABC_BC 6–84
Transformer bay for double busbars, AB_TRAFO 6–84
Bus-section breaker for double busbars, A1A2_BS 6–85
Bus-section disconnector for double busbars, A1A2_DC 6–85
Busbar earthing switch, BB_ES 6–85
Double CB bay, DB_BUS_A, DB_LINE, DB_BUS_B 6–86
1½-CB diameter, BH_LINE_A, BH_CONN, BH_LINE_B 6–87
Communication between modules 6–87
Configurations 6–88
General 6–88
Project-specific logic 6–88
Single breaker arrangement, line bay 6–88
Single breaker arrangement, bus-coupler bay 6–94
Single breaker arrangement, transformer bay 6–100
Double-breaker arrangement 6–101
Breaker and a half arrangement 6–102
Bus-section breaker 6–103
Bus-section disconnector 6–107
Bus earthing switch 6–116
Appendix 6–124
Function blocks and function block diagrams 6–124
ABC_LINE 6–124
ABC_BC 6–131
AB_TRAFO 6–137
A1A2_BS 6–142
A1A2_DC 6–145
BB_ES 6–148
DB_BUS_A 6–148
DB_LINE 6–150
DB_BUS_B 6–154
BH_LINE_A 6–157
BH_CONN 6–161
BH_LINE_B 6–163
Signal lists 6–167
ABC_LINE 6–167
ABC_BC 6–169
AB_TRAFO 6–172
A1A2_BS 6–174
A1A2_DC 6–175

BB_ES 6–176
DB_BUS_A 6–177
DB_LINE 6–178
DB_BUS_B 6–179
BH_LINE_A 6–180
BH_CONN 6–181
BH_LINE_B 6–182

Transformer voltage control 6–185

Application 6–185
Theory of operation 6–186
Design 6–190
Control modes 6–190
Operation modes 6–190
Tap changer supervision 6–191
Blocking 6–191
Fast step down mode 6–191
Fast step up mode 6–192
Input process Interface 6–192
Setting 6–193
Single mode of operation 6–193
Parallel mode of operation 6–194
Appendix 6–195
Function blocks 6–195
Function block diagrams 6–198
Signal lists 6–199
Setting tables 6–201

Autorecloser 6–205

Application 6–205
Theory of operation 6–207
Autorecloser and distance protection connections 6–207
Autorecloser and overcurrent protection connections 6–208
Redundant schemes 6–209
Blocking 6–210
Master/follower logic 6–211
Follower CB delay 6–212
Blocking the follower reclosure 6–212
Duplex logic 6–212
Design 6–215
Timers 6–215
Dead times 6–215
Extended dead time 6–215
Maximum fault duration for a reclosure attempt 6–215
Reclaim time 6–216
Close signal duration 6–216
Discrimination times 6–216
Close assertion time-out 6–217
Blocking time 6–217
External binary inputs 6–217
Start and trip signals from the distance protection function ... 6–217
Circuit breaker ready signals 6–218

Circuit breaker open 6–218
De-energized line and checking synchronism 6–219
External blocking 6–219
External synchrocheck bypass signal 6–219
External extension of the dead time 6–219
Close CB and signalling outputs 6–219
Function status 6–219
Autoreclosure cycle in progress 6–220
Circuit-breaker closing signals 6–220
Definitive trip 6–220
Perform three phase trip 6–220
Zone extension 6–221
Appendix 6–222
Function block 6–222
Signal list 6–222
Settings table 6–224
Timing diagrams 6–227

Synchrocheck 6–229

Application 6–229
Theory of operation 6–230
Features 6–230
Voltage supervision operating modes 6–231
Continuous mode 6–231
Busbar transfer 6–232
Multiplication of the synchrocheck function 6–232
Multiplication by hardware 6–232
Response times 6–233
Design 6–234
Block diagram of the synchrocheck function 6–234
Measurement input and output function block 6–235
Voltage detection function block 6–236
Comparator function block 6–239
Control logic function block 6–241
Parameter set switch-over function block 6–242
Appendix 6–243
Signal list 6–243
Settings table 6–244
Wiring diagram 6–245

Logic **6–247**
Additional configurable logic **6–247**
Application 6–247
Design 6–247
BCD8_I (C6000) 6–247
Function 6–247
Supervision 6–247
I_BCD8 (C6001) 6–247
Function 6–247
Supervision 6–247
I_1of32 (C6002) 6–248
Function 6–248
Supervision 6–248
1of32_I (C6003) 6–248
Function 6–248
Supervision 6–248
B8_I (C6010) 6–248
Function 6–248
I_B8 (C6011) 6–248
Function 6–248
Supervision 6–248
B16_I (C6012) 6–248
Function 6–248
I_B16 (C6013) 6–249
Function 6–249
Supervision 6–249
PULSE (C6020) 6–249
Function 6–249
N_PULSE (C6021) 6–250
Function 6–250
P_PULSE (C6022) 6–251
Function 6–251
OSC_B (C6023) 6–251
Function 6–251
Appendix 6–252
Function blocks 6–252
Function block diagrams 6–258
Signal lists 6–258
Setting tables 6–262
Interbay communication **6–263**
Application 6–263
Design 6–264
SEND 6–264
RECEIVE 6–264
Appendix 6–265
Function blocks 6–265
Signal lists 6–265

Monitoring 6–267

Event recording function 6–267

Application 6–267

Theory of operation 6–267

Design 6–268

Generation of events 6–268

Buffering and transmission of events 6–268

Failure of a station level unit 6–269

Length of the event queue 6–269

Event queue overflow 6–269

Time synchronisation 6–269

Appendix 6–270

Settings tables 6–270

Metering 6–273

Pulse counters and meters 6–273

Application 6–273

Operating principle and design 6–273

Incremental counters 6–274

Signal acquisition 6–274

Start 6–274

Overflow 6–274

Representation 6–274

Counter clock frequency 6–275

Integrity 6–275

Accuracy 6–275

Design 6–275

Power meter 6–275

General 6–275

Calculation of scaling factors 6–275

Transferring counter and metering values 6–279

Data transfer 6–279

Status information 6–279

Storage of counter and metering values 6–279

Time synchronisation 6–280

Time-controlled data transfer 6–280

Periodic transfer between queues 6–280

On request 6–280

Time accuracy 6–281

Setting 6–281

Analogue measurements 6–283

System overview 6–283

Transfer of measured variables 6–285

Cyclic 6–285

Signal integration 6–286

Signal scaling 6–287

Description 6–287

General 6–287

Determination of the scaling factor s and offset o 6–288

Determination of the nominal value n 6–289

Settings 6–292

Supervision (zone configuration) 6–292

Description 6–292

Settings 6–294

AC measurements 6–294

Overview 6–294

Accuracy 6–296

AC measured variables 6–296

Energy measurement 6–298

Common settings 6–298

Assigning attributes to measured variables 6–298

Software modules 6–299

Zero band setting 6–299

RMS value 6–300

Residual RMS voltage or current 6–301
Active power 6–302
Reactive power 6–303
Multifunctional measurement 6–304
Frequency 6–307
DC measurement 6–308
Overview 6–308
Accuracy 6–309
Modules 6–309
Testing 6–309
AC measured variables 6–309
DC measured variables 6–309
Signal processing 6–311
Application 6–311
Communication via the interbay bus 6–312
Generation of status information 6–312
Cause of transmission 6–313
Originator address 6–314
Overview of processing functions 6–314
Processing by the binary input unit 6–314
Processing by the central processing unit 6–314
Design 6–315
Signal acquisition by the binary input unit 6–315
Signal acquisition and resolution 6–316
Inversion 6–316
Contact bounce filter 6–317
Suppression of spurious oscillation 6–318
Processing double point indications 6–320
Generation of events 6–320
Settings 6–321
500BIM01 6–321
500BOM01 6–322

1 Documentation structure

Each available function is described in a separate chapter. The chapter consists of:

- An application section, describing the main application area and functionality of the function.
- A theory of operation section, describing the theory behind the function, mathematical operations implemented and the theory of control and/or protection techniques involved.
- A design section, describing in a block-wise manner how the function is built.
- A setting section, describing how to connect, configure and set the function by itself as well as in conjuction with other functions of the terminal.
- An appendix documenting reference information such as function block pinout, input and output signals and available settings.

1.1 Function blocks

Each function block is illustrated in the appendix by the MULTIPROG wt graphical symbol.

Figure 1: Function block symbol example

Input signals are always on the left side, and output signals on the right side. Settings are not displayed. A special kind of settings are sometimes available. These are supposed to be connected to constants in the configuration scheme, and are therefore depicted as inputs. Such signals will be found in the signal list but described in the settings table.

1.2 Function block diagrams

The description of the design is chiefly based on simplified logic diagrams which use IEC symbols for the presentation of different functions, conditions etc. The functions are presented as a closed block with the most important internal logic circuits and configurable functional inputs and outputs.

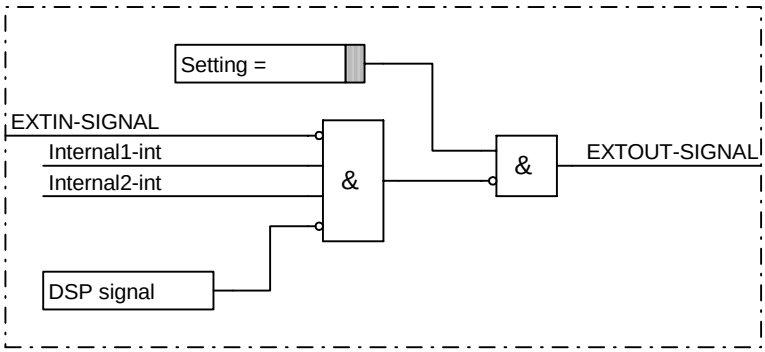

Figure 2: Function block diagram example

Input and output signals are always capitalized. The connector line is drawn all the way against the surrounding frame. Internal signals are indentified by the suffix *-int*. The connector line ends about 5 mm from the surrounding frame. Settings and DSP signals are identified by the surrounding frame, settings having a gray notch at the connector line.

1.3 Signal lists

The signal list contains all available in and out signals of the function block. If a function consists of more than one block, each block is listed in a separate list. Data types are used as defined in IEC 1131-3 programming language.

Table 1: Signal list example

Signal	Type	In/out	Description
CMD_MODE_AUTO	BOOL	In	Command to switch the regulator to automatic mode
CMD_MODE_MANUAL	BOOL	In	Command to switch the regulator to manual mode
DEVIATION_NEG	REAL	Out	Negative voltage derivation (measured voltage < setpoint voltage)
STEP_NUM	INT	Out	Number of steps to execute
FSD_ACTIVE	BOOL	Out	Fast step operation is active
CMD_EXED	BOOL	Out	Command was executed successfully

1.4 Setttings tables

The settings table contains all available settings of the function block. If a function consists of more than one block, each block is listed in a separate table. Data types are used as defined in IEC 1131-3 programming lan-

guage. Even though data ranges are only limited to the range of the specified data type, the usable range shows the practically usable range for the particular setting.

Table 2: Settings table example

Parameter	Type/ [unit]	Usable range	Default	Description
EX_EMPEL	BOOL		TRUE	Set EX_EMPEL to enable the test mode
ANA_LOG	REAL [V]	0-10.000	2.34	The voltage measured by the function

1 Application

The apparatus control function is a program supervising operation of a set of high-voltage apparatuses within a bay. Apparatuses in the form of breakers, disconnectors, and earthing switches.

Figure 1 gives an overview from what places the apparatus control function receive commands. Orders to operate an apparatus can come from the CC (Control Centre), the station HMI, the local control panel, or as an alternative, from an independent local back-up panel (via the I/O).

When operating from the local back-up panel, the apparatus control function can be bypassed. The back-up panel is hard wired to the apparatuses for this purpose.

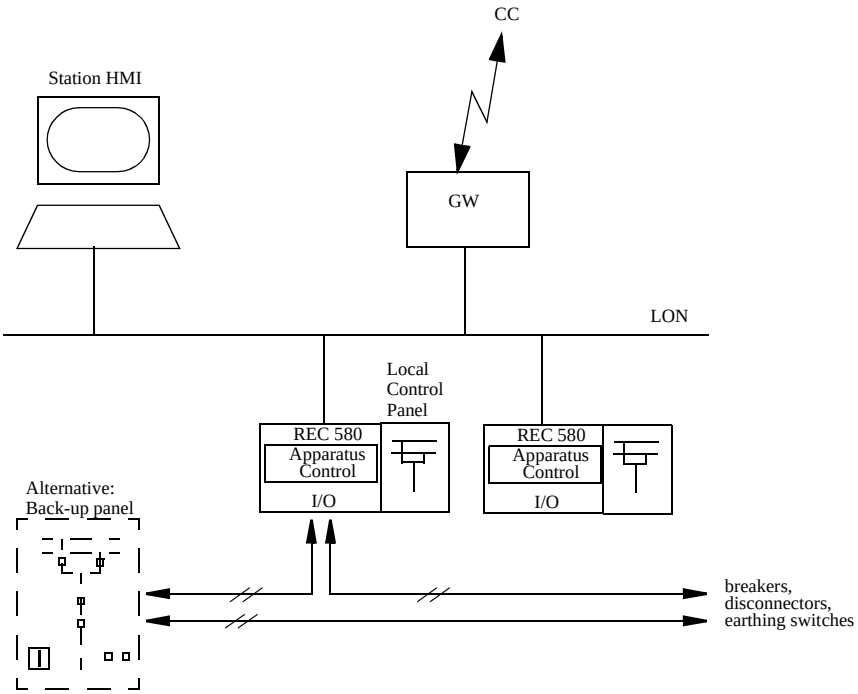

Figure 1: Overview of the apparatus control functions

Features in the apparatus control function:

- Supervision of valid operator place (one operator place at a time)
- Each apparatus can be interlocked
- The breakers can be connected to synchro-check function
- Reservation of bays
- Supervision of operating apparatus

2 Theory of operation

2.1 General

A bay can handle, for examples a power line, a transformer, a reactor, or a capacitor bank. The different high-voltage apparatuses within the bay level can be operated directly by the operator or indirectly by sequences. The different apparatuses can also be operated automatically.

Because a high-voltage apparatus can be allocated to many functions within a Substation Automation system, the object-oriented approach with an internal module that handles the interaction and status of each process object ensures consistency in the process information used by higher-level control functions.

High-voltage apparatuses such as breakers and disconnectors are controlled and supervised by one software module each. Because the number and type of signals connected to a breaker and a disconnector are almost the same, the same software is used to handle these two types of apparatuses.

The software module is connected to the physical process unit in the switchyard by a number of binary inputs and outputs. Special function blocks were created for making bay and apparatus control programs as efficient as possible. Seven main types of function blocks were created to cover most of the control and supervision within the bay.

The different functions included in the apparatus control are described below.

2.2 Operator place

The apparatus can be controlled from three different operator places:

- Remote
- Station
- Local

The operator places have different priorities:

- Local (highest)
- Station
- Remote (lowest)

Normally, only one operator place is valid at a time. But the user can define that more than one operator place is valid at the same time.

The remote operator place is assigned by the station operator. When local operator place is deactivated (by the local operator) previous operator place becomes valid.

When the operator place is established, the selection and execution command of the apparatus can be handled in single, two or three steps.

To inform operator(s) at the station HMI that the apparatus is selected from another operator place, there are indications for each apparatus from which operator place (remote, station or local) it is selected. This is to inform that the apparatus is already selected; so a selection from that operator place is not possible.

When a selection is made, the apparatus control goes back into idle state for one of these reasons:

- After a successful operation
- Execution command to the process but no successful operation
- No execution command within specified time
- When reservation failed
- When an interlock occurred
- In blocking state
- Cancelling of the operation

When the apparatus is in idle state, it is possible to make a new selection from the valid operator place.

The operator can override the interlocking and/or the reservation from all operator places.

Of course arbitrarily orders can be sent to the REC 580, but only orders involved with the apparatus control are described below.

The apparatus control handles different kind of commands coming from different operator places. Interpret the local operator place as the local control panel.

These commands are supported:

- Selection of operator place, local, station and/or remote
- Selection with or without direction (open/close)
- Execution with or without direction (open/close)
- Cancel the selection
- Override of interlocking and/or synchro-check/phasing
- Block/deblock operation (per apparatus or bay)
- Block/deblock updating of the position indications (per apparatus or bay)
- Setting of the position indication, open/close

2.3 Selection and reservation

The purpose of the reservation and selection is to prevent double operation, either in the bay itself or in the complete station. For an operation in the bay, the reservation part always reserves the own bay. The engineer can include or exclude the part that reserves other bays.

The selection and reservation function consists of four parts:

1. Reservation of the own bay

2. Requesting reservation of other bays and handling of the acknowledgement signals
3. Replying to reservation requests
4. Permitting selection of apparatuses, depending on reservations

The selection and reservation function has two ways of starting. It starts when a request select signal is set in the own bay or when it receives a request for reservation from another bay.

The basic part of the reservation function is the reservation of the own bay. When the reservation is made, no acceptance of selections from other apparatuses can occur until all selection requests and reservations are cancelled.

Reservation of the other bays can also be made. A request for reservation is sent to these other bays. All bays should respond with an acknowledgement that they have reserved the own bay for operations. After reception of these signals, the reservation is considered successful and selection can proceed.

To prevent that a reservation is not reset when the reserve request becomes invalid, due to communication error, the reservation in the own bay and the acknowledgement to the other bays are cancelled when the time for cancelling the reservation has expired. The engineer should set this time to the operating time of the slowest not hand driven disconnector.

One timer supervises the reservation. If the time until a successful reservation is too long, the command sequence is stopped and an error message is generated.

It is possible to ignore failing reservation of other bays, if the operator wants to operate the apparatus. There is an override signal for this purpose.

Blocking of the reservation function is possible. With an override, the blocking of reservation on requests from inside the bay can be bypassed.

The reservation method is briefly explained in figure 2 and follows these steps:

1. Select apparatus to be operated from the station HMI
2. Reservation signal from the bay, which is to be operated
3. Transfer of acknowledgement and actual position indications from the other bays
4. Performed selection is presented on the station HMI
5. Execution of the command from the station HMI
6. Release (cancel) of the reservation

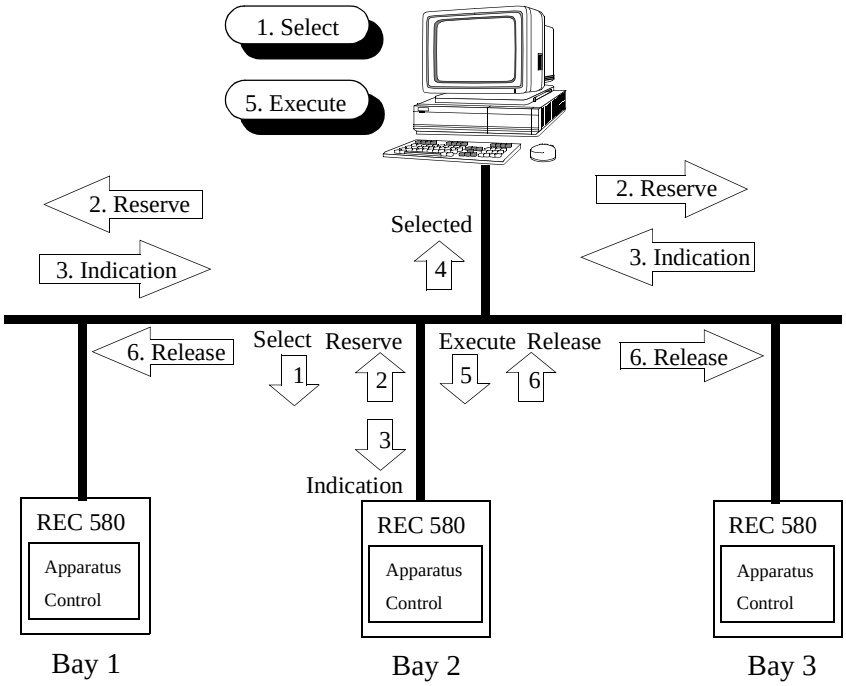

Figure 2: The reservation method

2.4 Manual updating of indications

The position indications can be set manually.

There are two different independent functions given:

- Blocking of position updating from bay level (for all apparatus in the bay) and apparatus level (for each separate apparatus)
- Setting the drive position indication to a defined position by the operator. Mainly this is used in cases where the drive is in maintenance or is disturbed and a defined end position is required. This function should cause an automatic update blocking of the position indication.

It can be chosen if blocked position indications cause a blocking of operation.

The supervision of the positions of an apparatus is based on the indications from the program and not the process status. This is to be able to simulate the positions when operating. In most cases, the process and indication status are identical.

2.5 Blockings

There are two bay-oriented blocking functions:

- Blocking of operation
- Blocking of updating of the position indication

Both of these different blockings are applicable for each apparatus separately and for the complete bay.

Blocking of operations can be separately performed for open/close.

Commands for the above described blockings are executed from the HMI. Of course, arbitrary signals can be used to cause a blocking. But the explicit orders come from the HMI.

2.6 Command supervision

Supervision functions stops the program from hanging in the middle of a command sequence. When the operation time is too long there is an error indication, and the command sequence resets. Such functions are:

- Supervision of the time between the selection is made and the following execute command. Adjustable time.
- Supervision of the time between the request to override and the following selection. The same timer as above.
- Supervision of the select/execute command sequence.

2.7 Supervision of operating apparatus

The control part should check the start conditions (for example, if there is a select for open when the position is open) for a valid selection, the movement itself, and correct completion. The corresponding status signals are given. The operation depends on the interlocking and blocking signals.

The supervision of the command output is made by the microcontroller on the output board.

A timer supervises the start of the drive. If the drive does not succeed in starting within a specified time, the command sequence resets, and an error indication is generated.

A timer supervises the movement of the drive. The maximum time can be set between the start and until the new position is reached.

When three phase indications are included, the pole-discordance function is included.

If blockings and interlocking allow operation, the drive can be operated when the starting-point is in the intermediate position.

2.8 Synchro-check

Synchro-check conditions can be considered when manually closing a breaker. The closing command at synchro-check is released via the apparatus control, as for ordinary operations with the synchro-check function excluded.

A timer supervises the synchro-check function. If there is no synchronism within a specified time (after a closing command is given), there is a failed synchronisation.

The REC 580 can use a built-in synchro-check function (also called internal synchro-check) or use an external synchro-check and phasing equipment, which are separate devices outside the REC 580. Two solutions are supported. The explicit closing command can come from the apparatus control itself (activated by the synchro-check) or from the external synchro-check equipment (activated by the apparatus control).

3 Design

3.1 General

The apparatus control function contains several function blocks. These function blocks are interconnected to form a control program reflecting the switchyard configuration.

A control program contains nine main types of function blocks. The total number used depends on the switchyard configuration. Beside the main types of function blocks the program contains simple logic like AND/OR gates.

These nine main types are called:

AUTHALL	Authority Allocation
L(S)_APPCMD	Switch Command
L_APPRSP	Switch Command Response
RSV_I	Reserve Input
BAYRES	Bay Reserve
COMCON	Command Control
POSIND	Position Indication
SWICON	Switch Control
PI	Process Interface

3.2 Overview

The figure below is a principle drawing about the main signal flow in the apparatus control.

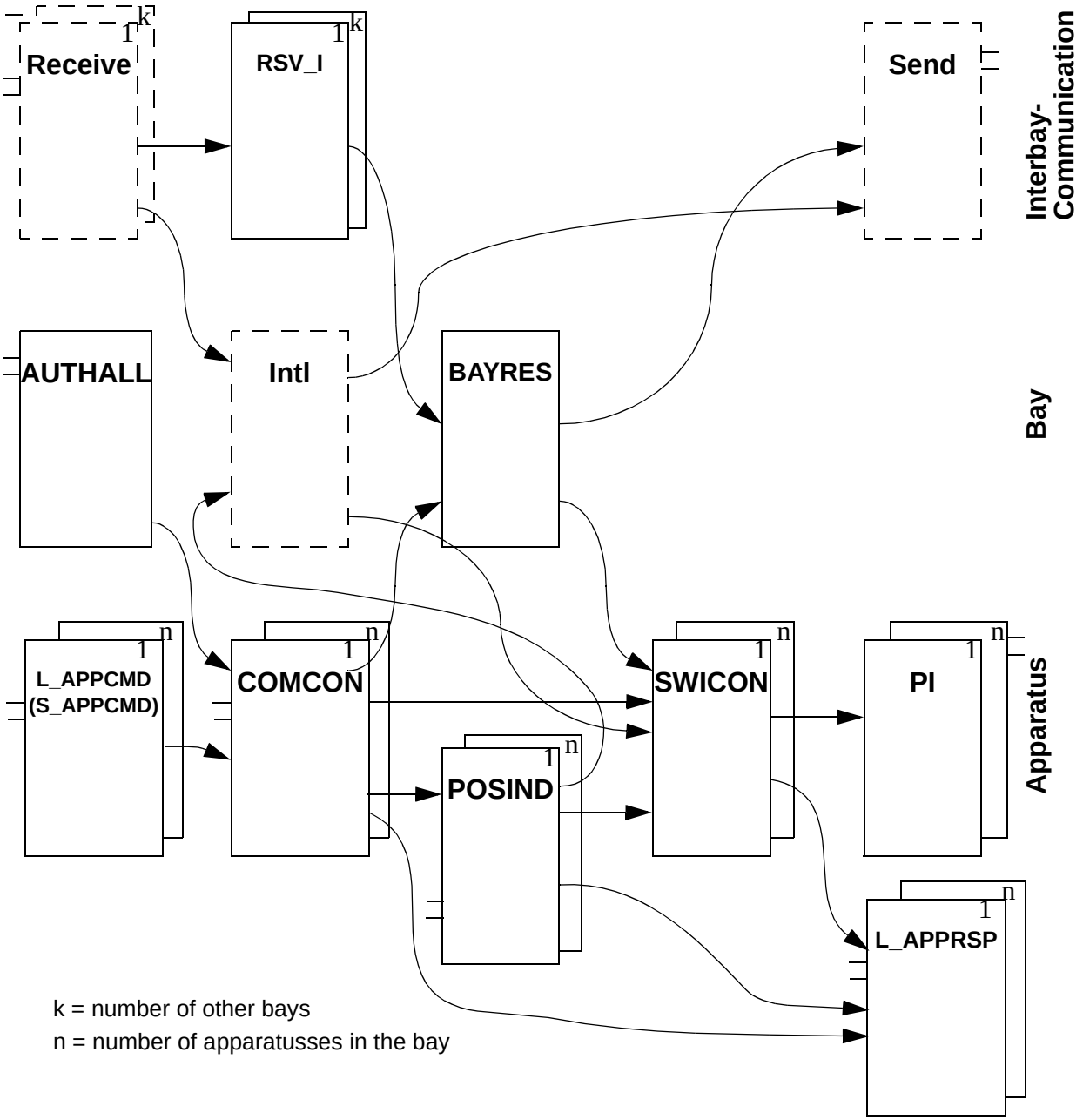

Figure 3: Apparatus control overview

Authority Allocation

There is one AUTHALL per bay. It gets information from the operator places in the station and it decides which of the operator places that will have the right to pass through. It informs COMCON about valid operator place.

Switch Command

There is one L_APPCMD per apparatus in the bay. Commands from Station HMI or Remote Control Centre are transmitted via LON. The inputs are ranged to the base software database signals, which are coming from different LON telegrams. S_APPCMD is used when commands are not transmitted via LON.

Switch Command Response

There is one L_APPRSP per apparatus in the bay. Commands from Station HMI or Remote Control Centre are transmit via LON. The commands get a response, which is done by the base software. The L_APPRSP gathers all necessary signals and connects them to the application software interface to be transmitted back via LON.

Reserve Input

There is one RSV_I per other bay the current bay has to communicate with. They are connected to each other in a chain and the last one of them sends its outputs to the BAYRES function block. RSV_I makes some preprocessing of signals, coming from other bays, for selection and reservation.

Bay Reserve

BAYRES sends signals concerning the reservation part of itself and other bays to the Send block and signals concerning selection to SWICON. Each BAYRES can handle up to eight apparatuses in the own bay. With more than eight apparatuses, several BAYRES:s can be connected in a chain.

Command Control

There is one COMCON per apparatus in the bay. It sends information to BAYRES to avoid double operation at the own bay and to reserve other bays. It sends also information to SWICON if there is commands for the own apparatus and to POSIND about manuel updating.

Position Indication

There is one POSIND per apparatus. It sends information about the actual status of the own switch to Interlocking module (Intl) and to SWICON.

Switch Control

SWICON sends information to PI when the apparatus has been selected and when it is permitted to make an operation

Process Interface

PI sends the executing order to the switch.

3.3 Command sequences

Figure 4 on page 25 is an example of the interaction between the different function blocks.

This example describes a two step command sequence. There are no external select relay so the feedback select signal to SWICON comes from PI. The figure describes how a command from a operator place is forwarded between the blocks. The error treatment is also described, but the data exchange with the LON interface is not included.

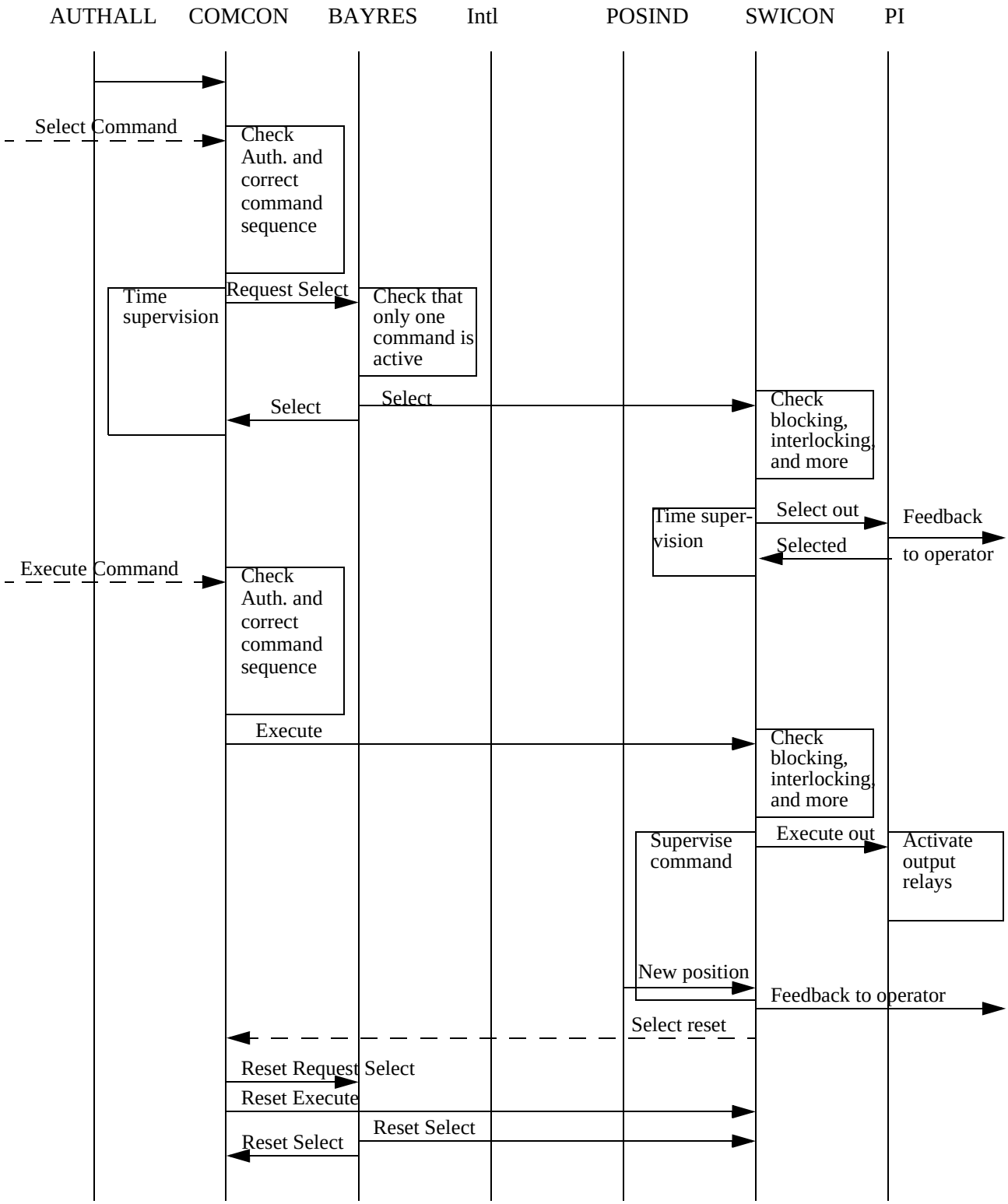

Figure 4: Command sequence

There are two different types of commands handled by the apparatus control:

Type 1: Commands that are a part of a command sequence:
Interlock Override
Synchro Check Override
Select
Execute

Type 2: Commands that are direct executed, such as:
Manual Update Open
Manual Update Close
Block Update
Deblock Update
Block Operation
Deblock Operation

For the type 1 commands the following apply:

1. When a select command comes to COMCON, COMCON checks if the command comes from the correct operator place and if the command is in the correct sequence. If these checks are OK, the output Command Active (CMD_ACT) is set and the command is processed further.
2. The COMCON sends a Request Select (REQ_SEL) to BAYRES. BAYRES handles the reservation and sends back a Select information (SEL_GRT_x) that the request was successful.
3. If no select signal comes before the time T_SPV_RSV has elapsed the command is cancelled and the output RSV_ERR is active for one execution cycle.
4. The Select information from BAYRES is also sent to SWICON, which checks if the apparatus is blocked or interlocked. If these checks are OK the select outputs will be set.
5. These select outputs are connected to the PI, which will activate outputs depending on the external relay configuration. If there are no external select relay the PI will also give Feedback Select to SWICON and the operator.
6. The operator then issues the execution command. COMCON checks the command sequence and that the execution is activated from the same operator place as the select command. After that the command is forwarded to SWICON.
7. SWICON checks the blocking and interlocking continuously and also this time. SWICON sets the correct outputs and starts to supervise the command.
8. The output from SWICON is connected to PI, which activates the correct outputs to the process.
9. After the command is finished, either via a successful command or via an error message, the SWICON function block sets the Select Reset output (SEL_RES) to reset the COMCON function block.

10. In COMCON the outputs Request Select (REQ_SEL), Execute (CMD_EXE) and Interlock Override (ITL_OVR), Synchro Check override (SYN_OVR) are reset if they are used.
11. BAYRES receives the reset Request Select (REQ_SEL) and resets the reservation.

The reservation sequence is described in chapter “Reservation function” on page 46.

For the type 2 commands the following apply:

1. The COMCON function block always has the current valid operator place or places from the Authority Allocation. When the command comes, the authority allocation is checked.
2. If several operator places are selected the command coming to the one with the highest priority is accepted. In COMCON also checks that there is no command sequence active.
3. If the command comes in the middle of another command sequence the command is cancelled and the output Command Sequence Error (CMD_SEQ_ERR) is set.
4. If the command is OK the output for respective command (BLK_OPR, DBLK_OPR, BLK_UPD, PROC_UPD, SUBS_OP or SUBS_CL) and the output Command Active (CMD_ACT) is set for one execution cycle.
5. The receiving function block for these signals (POSIND and a flip-flop for the block operation function) store these values in the persistent memory.

3.4 Standard modules

In REC 580, several standard function blocks are available. Below the different standard modules for apparatus control are described. The appendix describes input and output functions.

3.4.1 AUTHALL

The Authority Allocation functions is designed for three operator places. These places are Remote (e.g. control centre), Station (station HMI) and Local (control from backup panel or internal HMI via the control terminal). In addition there is also an Off position when there are no operator place allocated.

The function has priority between the different operator places. The highest priority is closest to the process. Local has higher priority than Station which has higher priority than Remote.

Only one operator place can be selected at one time. At least one of the inputs EXT_OFF, EXT_LOCAL or EXT_REMOTE must be set in order to have any valid operator place.

The function is designed to cover the following input connections:

- One external switch per bay. The switch has three positions Off (EXT_OFF), Local (EXT_LOC) and Remote (EXT_REM). Remote

in this case, is seen from the backup panel or local HMI and can be station or remote.

- One switch per bay selecting between station (BAY_STA) and remote (BAY_REM).
- One switch per station or part of station selecting between station (STA_STA) and remote (STA_REM).
- There is also one input indication if the inputs are valid (DATA_VALID) or not.
- The input PAR_FORCE_VALID is used to indicate the station/ remote outputs, though the VALID output is false. Normally all outputs are set to false when VALID is false. To force the output to show the positions from the station HMI, the input PAR_FORCE_VALID is set to true.

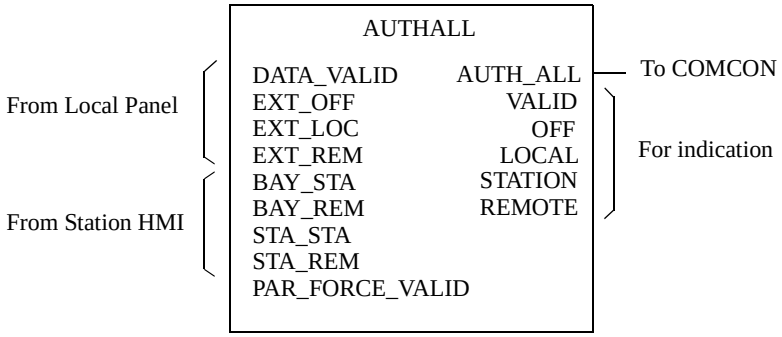

Figure 5: Function block AUTHALL

The two switches between station and remote (BAY_STA/REM and STA_STA/REM) can only be changed when the external bay switch is in remote (EXT_REM). These two switches have internal states, so the inputs can be pulses. The storage of these states are persistent after restart of the terminal.

The terminal can be set to Remote only if the bay switch (BAY_REM) and the station switch (STA_REM) are in remote position. It is set to Station if either the bay switch (BAY_STA) or the station switch (STA_STA) is set to Station.

The AUTH_ALL output is an integer with the packed information of the other signals (VALID, OFF, LOCAL, STATION, REMOTE). The VALID output is the least significant bit. For example, the AUTH_ALL gets the integer value 9 if the terminal is in station and the output has a valid value. This integer value is connected to COMCON function block to give permission for operation from valid operator place.

The VALID output is set when the external switch is one of the three states and the valid input (DATA_VALID) is set to true.

The OFF output is set when the external switch is in Off (EXT_OFF) and the VALID output is set.

The LOCAL output is set when the external switch is set to Local (EXT_LOC) and the VALID output is set.

The STATION output is set when the external switch is set to Remote (EXT_REM), and at least one of the other switches are in Station and the VALID output is set.

The REMOTE output is set when the external switch is set to Remote (EXT_REM), and both of the other switches are in Remote and the VALID output is set.

3.4.2 L(S)_APPCMD

There is one L_APPCMD per apparatus in the bay. Commands from Station MMI or Remote Control Centre are transmitted via LON. The inputs are ranged to the base software database signals, which are coming from different LON telegrams. S_APPCMD is used when commands are not transmitted via LON.

For L_APPCMD, the signals from the base software are taken over and checked according the set mode (input MODE).

Depending on the mode:

Single step control

- Select + direction + execute operation in one step

Double step control - two principles are possible:

- Select + execute direction
- Select direction + execution

Triple step control

- Select
- Direction
- Execute

the order of outputs is checked.

Internally in the function block the control sequence is created and the packed signal CMDS is given out.

The command inputs must be at least one cycle, the outputs are set minimum one cycle or longer, depending on how long the relating inputs are set.

Cancel is only possible if the sequence is not in the final step (execution).

The QU of QOC (Qualifier of Command) is an integer value with additional control information. The parameter inputs cover the possible override modes:

PAR_STD_CTL for interlocking and synchrocheck (no overriding)

PAR_ITL_OVR without interlocking (ITL-Override) but with synchrocheck

PAR_SYN_OVR without synchrocheck (SYN-Override) but with interlocking

PAR_ITLSYN_OVR without interlocking and synchrocheck (ITL+SYN-Override)

This overriding information is given out before any select is given out and is kept till the end of the control sequence.

The AUTHORITY input has to be connected to the relating actual authority. In case the authority is not set, a selection will be stopped and an indication is given out (CMD_FAIL_AUTH).

The substitution command handles the substitution function.

The substitution can be set by single commands; set a position freezing (BLK_UPD) and then set a substitution of the position.

Between two steps the COMCON supervises the next comming command. The LONG_OPR_ERR from COMCON is used to reset the control sequence in that case.

NOTE: For other allocations (local control panel, mimic board etc) the standard command function (S_APPCMD) is used.

The S_APPCMD is used for one apparatus and for commands not coming via LON bus. The signals for the COMCON modules input CMDS_x are gathered and changed into a packed signal.

All inputs are converted into an integer bitstring (output CMDS) for the COMCON function.The inputs: SELECT, SEL_OP, SEL_CL, EXE_OP, EXE_CL, EXECUTE and CANCEL are given out for one cycle.

Override must be done before first command step is done, otherwise error detected and cancel is set.

Between two steps the COMCON supervises the next comming command. The LONG_OPR_ERR from COMCON is used to reset the command error detection.

In case no valid authority is given the function generates an error message (CMD_ERR).

3.4.3 L_APPRSP

The function is used for one apparatus to generate the command response indications for the control, substitution and operation blocking commands over the LON bus.

The function generates the response signals which are needed for each type of the incomming commands for a switch.

The ACR_INPUTS are to be used to generate an additional information why the command was not successfully. For example because switch is interlocked against..., blocked etc.

This can be customer specific informations coded into an integer number. This integer value has to be generated by external B->I converter

The incoming signals have to be taken from the other modules of the function block parts (SWICON, ...).

The function generates the response signals which are needed for each type of the incomming commands for a switch. The timer inputs: T_SUP_CONV_RSP2 (supervision time for receive a confirmation) and T_SUP_TERM_RSP2 (supervision time for receive a termination) are used for all 4 functions, i.e. UPD, SUB, BLK and ITL.

NOTE: For other units (i.e. local control panel) response signals must be handled by free logic.

3.4.4 RSV_I

Reserve Input (RSV_I) receives information from other bays and put it together before the connection to BAYRES. It has also some error checks for this communication. There is one function block per “other bay”, i.e.

bay that the current bay has to reserve for its operations. The RSV_I:s are connected in a chain and the last of these RSV_I:s is connected to the BAYRES, see figure 6. The number of “other bays” in the figure is n.

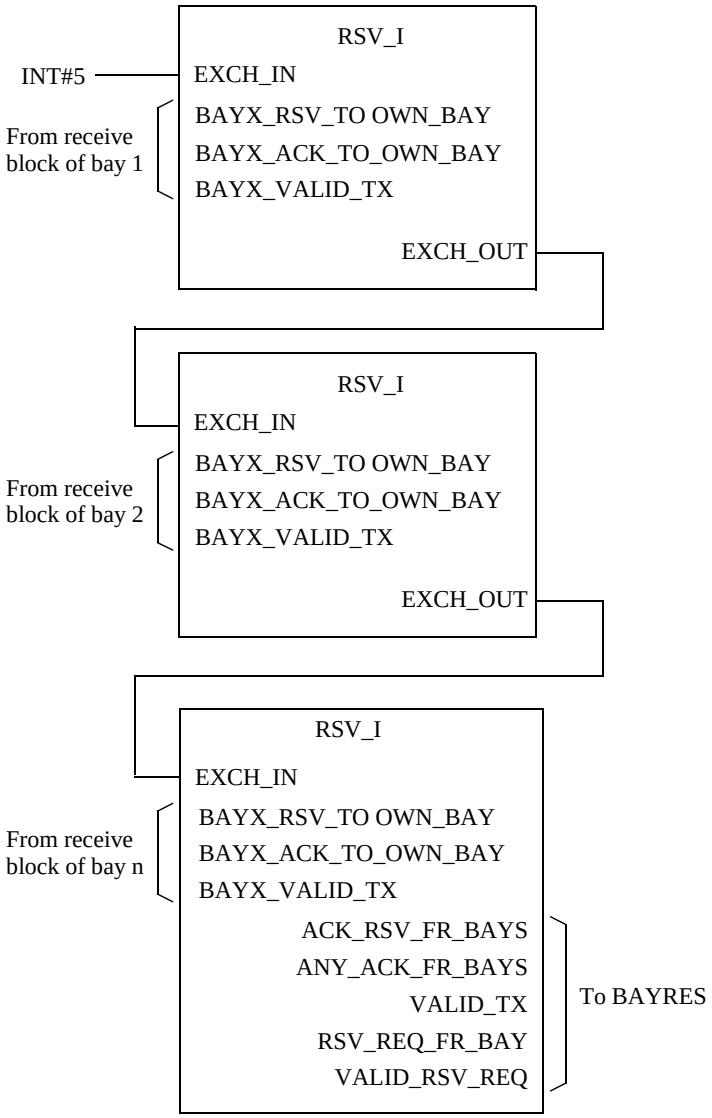

Figure 6: The function block RSV_I connected in a chain

Each RSV_I has to:

- gather the acknowledge from one bay (BAYX_ACK_TO_OWN_BAY) and the request for reserving (BAYX_RSV_TO_OWN_BAY).
- check if the transmission of data was correct (BAYX_VALID_TX).
- Put this information together with the old (recieved from previous RSV_I:s, EXCH_OUT) into the EXCH_IN. EXCH_IN in the first block sets allways to integer #5.

The last RSV_I has to gather the information it has received from the other bays:

- If RSV_I has received acknowledges from all the bays it sets the out-

put ACK_RSV_FR_BAYS.

- If there weren't any problems with the transmission in any of the bays it sets VALID_TX.
- If any of the bays has a set acknowledge signal it sets ANY_ACK_FR_BAYS.
- If there is a request of reserving the own bay from another bay it sets RSV_REQ_FR_BAY.
- If same request is valid it sets VALID_RSV_REQ.

The program is prepared to handle bays not yet installed in the network. If this is the case the input "Future use" shall be true.

3.4.5 BAYRES

The function block Bay Reserve (BAYRES) handles the reservation and selection function at operation of high voltage apparatuses. There is one BAYRES per eight apparatuses in the bay.

The purpose of the reservation and selection function is primarily to transfer interlocking information in a safe way and to prevent double operation in a bay, switchgear, or complete substation. The "Reservation function" on page 46 describes the method more in details.

BAYRES starts to operate in two cases. It starts when there is a request for reservation from the own bay or if there is a request from another bay to reserve the current bay.

3.4.5.1 Reservation request of only the own bay

If the reservation request comes from the own bay, BAYRES has to know which apparatus the request comes from. This information is in the input signal REQ_SEL_x, (where x is the number of the apparatus, which makes the request). If the bay is not reserved by itself or another bay and the corresponding input PAR_REQ_INT_x is set, the selection is made with the output SEL_GRT_x, (where x is the number of the requesting apparatus), without to reserve any other bay.

3.4.5.2 Reservation of other bays

If the BAYRES receives a request from an apparatus in the own bay, that requires other bays to be reserved, it checks if the corresponding input PAR_REQ_INT_x is not set. Before it sends the request to other bays, it checks whether it already has any response (acknowledge) from any of the bays (ANY_ACK_FR_BAYS). BAYRES will activate the output RSV_BAYS to reserv other bays that are predefined (to be reserved) and wait for their response (acknowledge). BAYRES waits for the external acknowledge as long as the REQ_SEL_x is high.

If BAYRES receives the acknowledge from the other bays (ACK_RSV_FR_BAYS), it sets the output RESERVED and SEL_GRT_x (where x is the number of the requested apparatus).

3.4.5.3 Reservation request from another bay

If there is a request from another bay (RSV_REQ_FR_BAY) to reserve the current one, BAYRES checks if the RESERVED is set. If it is not, a signal ACK_RSV_TO_BAYS is set.

If RSV_REQ_FR_BAY and VALID_RSV_REQ both are TRUE, the outputs ACK_RSV_TO_BAYS and RESERVED sets to TRUE. If then the communication suddenly fails, and VALID_RSV_REQ becomes FALSE, the output ACK_RSV_TO_BAYS immediately resets and the timer starts.

If no VALID_RSV_REQ comes within the time set by T_SPV_CAN_RSV, the reservation resets.

The reservation is cancelled if:

- external request resets
- communication fails and is not back within the supervision time T_SPV_CAN_RSV
- blocking is set

3.4.5.4 Blocking of request

Blocking of the reservation function is possible. This blocking is performed by the BLK_RSV input, which blocks the reservation for requests coming from in- and outside the bay. With an override signal (OVERRIDE) the blocking of the reservation for requests from inside the bay can be bypassed.

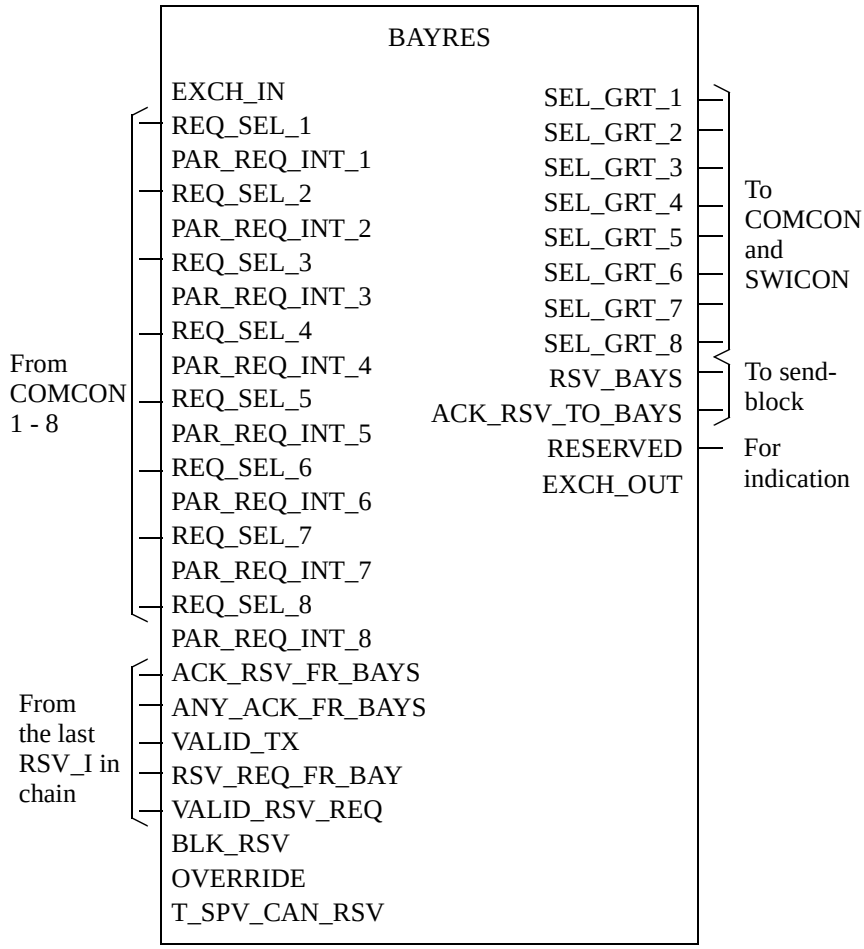

Figure 7: Function block for the bay reservation

3.4.5.5 More than eight apparatuses

The input EXCH_IN and output EXCH_OUT are used for information exchange between BAYRES blocks, when more than eight apparatuses in the same bay are used for control. The inputs and outputs of these function blocks are connected to each other in a loop as shown in figure 8.

The reservation and selection function has several bits available to request other BAYRES:s to be reserved. These BAYRES:s reply with an acknowledge through the same information exchange.

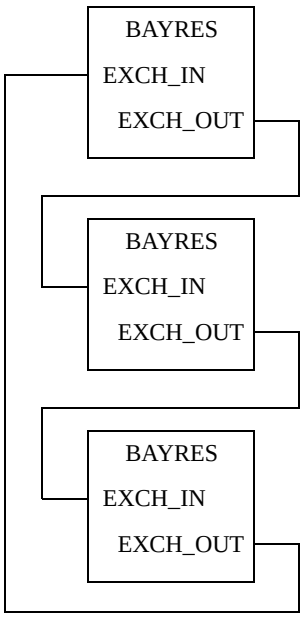

Figure 8: Connections between three BAYRES:s intended to control up to 24 apparatuses

3.4.5.6 Parameters

T_SPV_CAN_RSV:

For cancelling a reservation if the communication fails at incoming requests and the communication is not back within the supervision time.

3.4.6 COMCON

Command Control (COMCON) acts as an interface between the possible operator places and the control program. The function do also have some error handling for the selection and reservation procedure. There is one COMCON per apparatus.

The selection and execution commands to COMCON can be handled in three different ways. It can either be done in two or three steps command handling, i.e. the commands have to be confirmed once or twice before they are executed. They are (-> stands for a time delay, i.e different execution cycles of the function block):

- select -> execute + open/close
- select + open/close -> common execute
- select -> open/close -> execute

These three command sequences might be a part of a longer sequence starting with commands overriding the synchronization (SYN_OVR) and interlocking (ITL_OVR) functions. If the operator would like to override either synchronization or the interlocking function, these commands has to be given before (or latest at the same time as) any selection of the apparatus is done. If they are given after a selection, the command sequence will be terminated and the error CMD_SEQ_ERR will be set.

COMCON is able to handle up to five different operator places (CMDS_x, where x is the number of the operator place). CMDS_x is a packed signal and it is of the type unsigned integer (word). CMDS_x includes the signals:

- sel_Des
- sel_Op
- sel_Cl
- exe_Op
- exe_Cl
- exe_Des
- can
- itl_Ovr
- syn_Ovr
- blk_Opr
- deblk_Opr
- blk_Upd
- proc_Upd
- subs_Op
- subs_Cl

The last six signals are not allowed to be set when a command sequence begins or during a command sequence. If at least one of them is set, a command sequence error (CMD_SEQ_ERR) is given and the sequence will be terminated. This error will also be set if e.g. blk_Opr and deblk_Opr are set at the same time, sel_Des is set together either with sel_Op or sel_Cl, exe_Des is set together with exe_Op or exe_Cl or syn_Ovr is set with sel_Op or exe_Op. In all cases the command sequence will be terminated and the error CMD_SEQ_ERR will be set.

In the standard solution the number of entries (CMDS_x) is for five operator places (local, station remote and two extra).

The input AUTH_ALL decides which of the CMDS_x that should be forwarded to the control functions handling the switching, position indication and blocking. It sets the output CMD_ALL to the number of the current operator place (i.e. the one which has started a command sequence).

When a cancelling signal (can in CMDS_x) is set after an execute command has been given, COMCON will reset all outputs and set CMD_CAN, which will be reset when the SEL_RES signal will be set.

The output CMD_EXE will not be set if the input SEL_GRT isn't set.

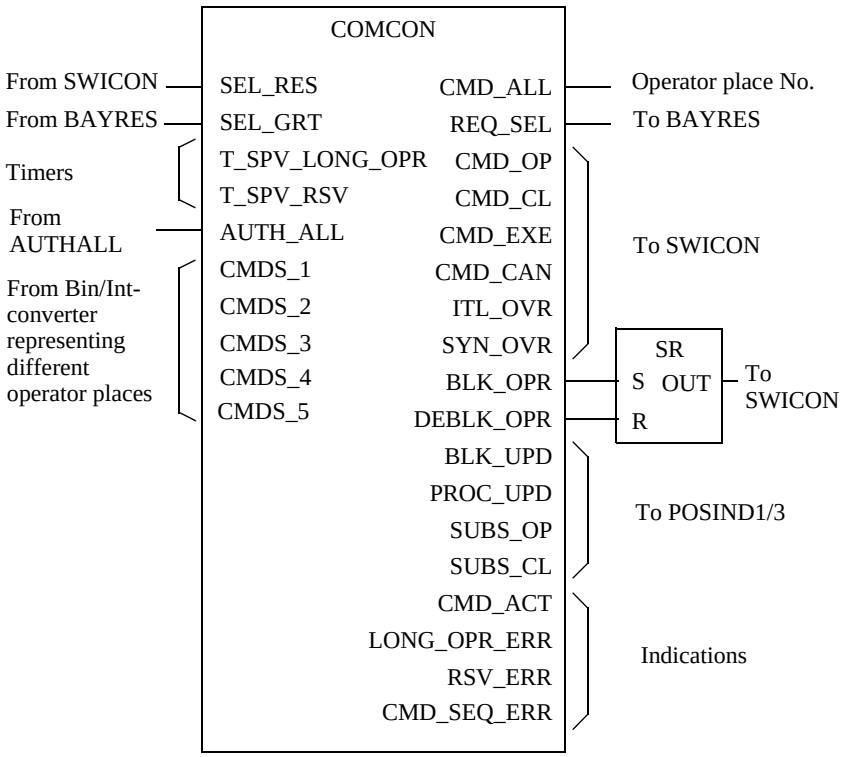

Figure 9: Connections to other function blocks within the apparatus control function

3.4.6.1 Two steps command

When there is a request of changing the position of the apparatus, REQ_SEL and the direction of the change of position (open/close) is set and a timer is initialized. The time T_SPV_RSV is related to this timer. The signal REQ_SEL results in the response signal SEL_GRT from function block BAYRES. SEL_GRT can't be set if there is no REQ_SEL.

The operator has to make different sequences of commands within a certain time. There are two different occasions when this is of interest. There has to be a time limit:

- between the selection of an apparatus and the execute command to the same apparatus.
- between the SYN_OVR or ITL_OVR command and a command that utilizes the override command.

On those occasions a timer is initialized. The time T_SPV_LONG_OPR is used in this purpose. The output CMD_ACT is to indicate that COMCON is in a sequence of command.

3.4.6.2 Three steps command

If the change of a position of an apparatus has to be done in three steps the direction can either be set after or before the SEL_GRT signal is set.

Command handling errors

If the SEL_GRT isn't set, i.e. the reservation is not completed, before the time T_SPV_RSV has expired, RSV_ERR will be set and REQ_SEL and CMD_ACT will be reset.

If SEL_RES is set during the reservation (see System Overview, Bay and Apparatus control) the whole reservation procedure will be cancelled. SEL_RES cannot be set if there's no SEL_GRT.

If the time T_SPV_LONG_OPR expires the output LONG_OPR_ERR will be set.

If COMCON finds out that the commands in the command sequence weren't given in a logical order it will set CMD_SEQ_ERR and cancel the whole operation.

If syn_Ovr (in CMDS_x) has been set during a command sequence and any ..._Op (in CMDS_x) will be set, COMCON will terminate the sequence and set the output CMD_SEQ_ERR.

If the authority allocation (AUTH_ALL) will change during a command sequence, COMCON will react and cancel the command sequence. The only exception from this rule is if COMCON has set CMD_EXE. In that case the command sequence will not be cancelled (terminated).

If there comes a cancellation signal (can in CMDS_x) when no command sequence has started, the output (CMD_CAN) will be set.

3.4.6.3 Parameters

T_SPV_LONG_OPR:

Parameter defining supervision time for long operation. It is the maximum time e.g. between the order to override the interlocking and the select order or between the select order and the open/close order. If the time is exceeded the interlock override and/or the selection are cancelled.

T_SPV_RSV:

Parameter defining supervision time for reservation of bays.

3.4.7 PI

The function block SWICON sends information to the function block Process Interface (PI) when the apparatus has been selected and when it is permitted to make an operation. Then PI sends the executing order to the apparatuses via the binary output board. Three variants of PI exists, PI_1, PI_2, and PI_1_5 with different functionality, which are described below.

For all functions in common is:

The TRIP input is used for a direct opening command. The AR_CL and SYN_CL inputs are used for direct closing command.

3.4.7.1 PI_1

The PI_1 is used for a single contact output control, that means the select and execute will energize one output relay for the relating direction.

The logic diagram is shown in figure 10.

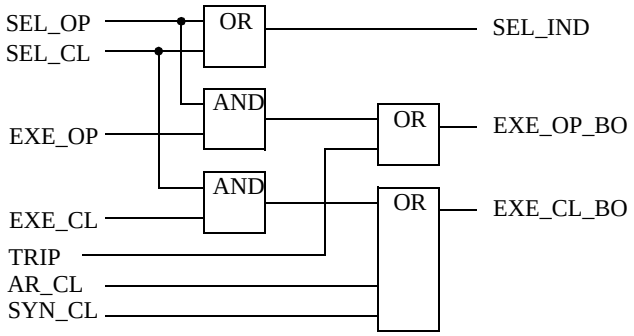

Figure 10: Function block diagram for PI_1

3.4.7.2 PI_2

The PI_2 is used for a double contact output control, that means the select will energize one output relay (i.e. the positive control potential) and the execute the other output relay (i.e. the negative control potential) for the relating direction. If one of the inputs SEL_CL or SEL_OP is set, the corresponding output EXE_OP_P_BO or EXE_CL_P_BO respectively is activated. The correlating output EXE_OP_N_BO or EXE_CL_N_BO is activated if the corresponding input EXE_OP or EXE_CL is set.

The logic diagram is shown in figure 11.

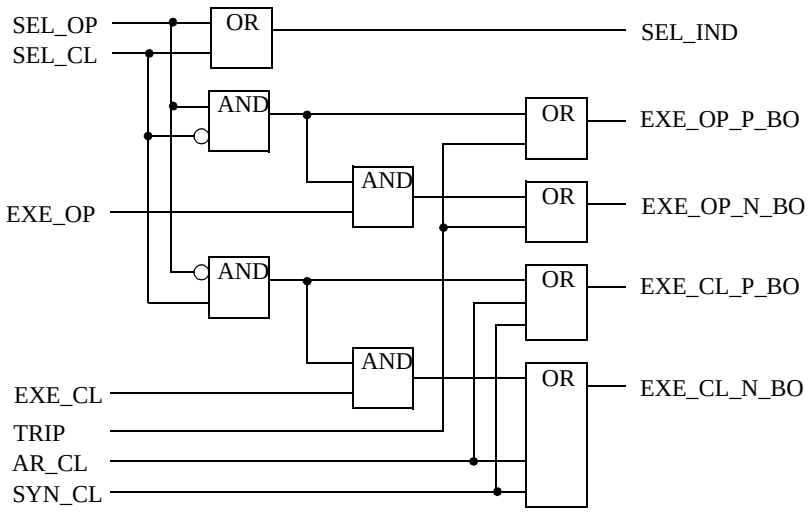

Figure 11: Function block diagram for PI_2

3.4.7.3 PI_1_5

The PI_1_5 is used for a 1 1/2 contact output control, that means the select will energize the relay for the relating direction and the execute a common output relay (i.e. the negative control potential for all switches in the bay).

If one of the inputs SEL_CL or SEL_OP is set, the corresponding output EXE_OP_P_BO or EXE_CL_P_BO respectively is activated. The output EXE_N_BO is activated if the input EXE_OP or EXE_CL is set.

The logic diagram is shown in figure 12.

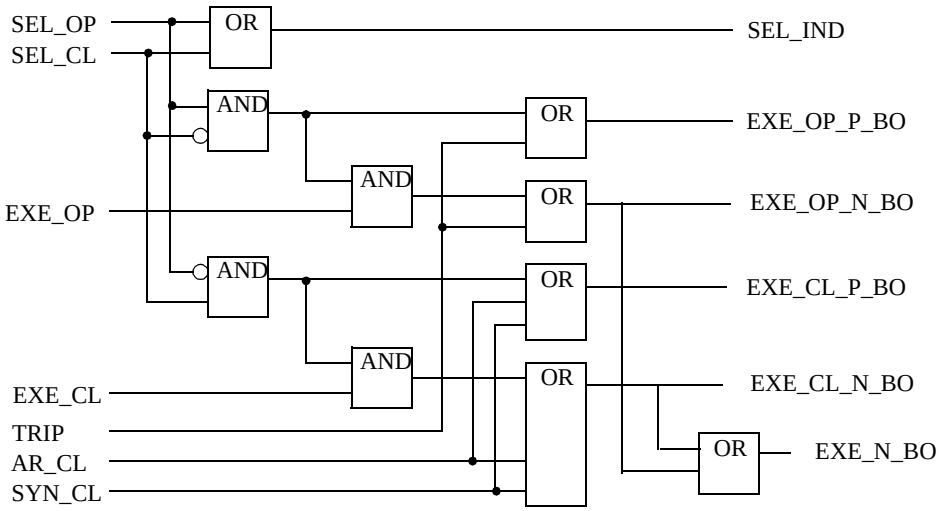

Figure 12: Function block diagram for PI_1_5

3.4.8 POSIND

The function blocks POSIND3 and POSIND1 handle the position indications including quality attributes needed to set up a control and supervision application in the control terminal. The quality attributes used for position indications are IV (Invalid), BL (Blocked) and SB (Substituted). The difference between POSIND3 and POSIND1 is that POSIND3 handles the position of all 3 phases and includes the pole discordance supervision. POSIND1 handles only one pole and has no pole discordance detection.

The function is used for one double indication position and makes “static checks” of the regarding process inputs. The supervision during a switch operation is done in the SWICON module.

Depending on the position inputs BI_OP_POS_L1..3/BI_CL_POS_L1..3 and the qualifiers IV_IN_L1..3, BL_IN_L1..3 and SB_IN_L1..3 the outputs OP_DEFI/CL_DEFI are calculated. Any other case than definite valid open or close position will set both outputs to 0.

The input IV_SET_BY_ASW is to be used in the application software for a signal indicating that the regarding position signals are no more valid; e.g. the indicating voltage circuit has tripped.

The BLK_UPD is to be used for an operators pulse command coming from function block COMCON indicating that the regarding position signals are to be blocked. PROC_UPD is resetting that function. STDY_BLK_UPD is a steady signal handling above function.

The operators command SUBS_OP/_CL, coming from the COMCON module will force the position value to the desired position. Reset is done by PROC_UPD or going attributes IV and BL.

To get the positions forced, the state of IV or BL must be true. That means at least one phase has to be in that state.

If no command is running and the position is changed (independent of the start position: open or closed) there is an uncontrolled position change (UNCTL_CHANGE_POS) indication. If only open or close change shall be indicated, that might be done by external logic. The EXECUTING input from SWICON indicates weather the switch is in action or not and that the change of position is caused by a controlled situation.

The function will detect pole discordance if the regarding phases are not in same position after elapse of T_SPV_POLE_DISC.

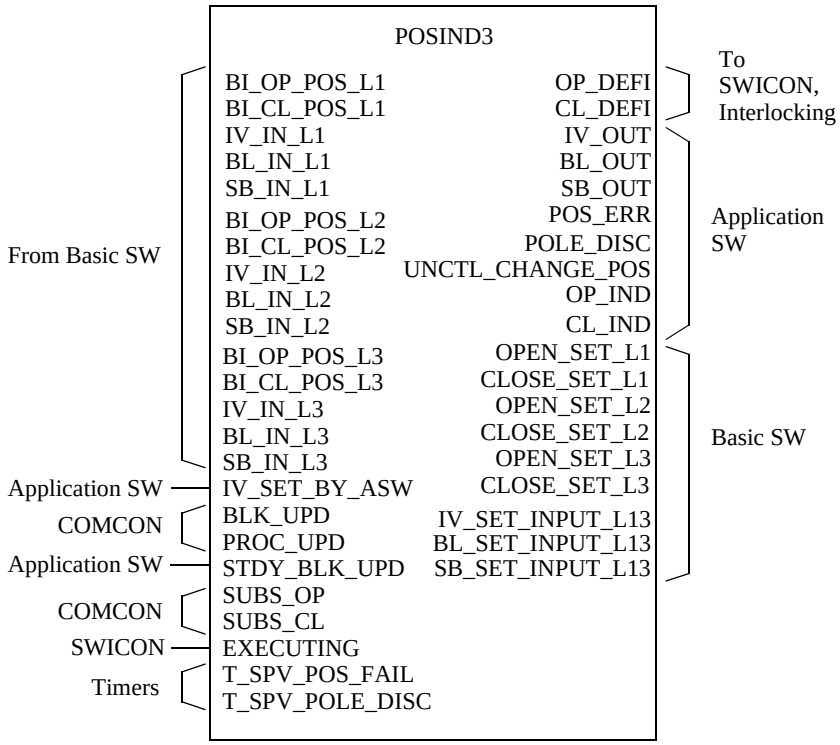

Figure 13: Function block POSIND3

3.4.8.1 Parameters

T_SPV_POS_FAIL:

Supervision time for check if both positions are 0-0 after long time. The time should be longer than expected manual operation by a hand crank.

T_SPV_POLE_DISC:

Supervision time for pole discordance suppression. Used only in POSIND3.

3.4.9 SWICON

The function block SWICON executes the commands, i.e. gives all the commands to the apparatus and supervises the operations. There is one SWICON per apparatus. SWICON is able to coordinate also synchronization and autoreclosing functions.

The control system fulfils these different control sequences (they will be referred to as seq. 1, seq. 2a/b and seq. 3), i.e.:

- Single step: select + direction + execute (seq. 1)
- Two steps A: select + direction -> execute (seq. 2a)
- Two steps B: select -> execute + direction (seq. 2b)
- Three steps: select -> direction -> execute (seq. 3)

The control squence starts when receiving a SEL_GRT signal. SWICON checks the interlocking inputs (ITL_OP and/or ITL_CL). In case of seq. 2a the direction is available on the CMD_OP or CMD_CL inputs and only one of the interlocking signals is checked. In case of seq. 2b or seq. 3 this information is not available and both interlocking signals has to be checked. One of them is checked a second time when the direction is known.

If the interlocking function allows operation, SWICON energizes the select relay by setting either the SEL_OP and/or SEL_CL output, depending on whether the direction is available or not. If the direction isn't available it sets both SEL_OP and SEL_CL. At the same time the timer T_SPV_SEL is initialized and the FDBK_SEL has to be set before this timer has expired. The CMD_CAN signal would cause a reset of both SEL_OP and SEL_CL. If FDBK_SEL isn't set within T_SPV_SEL, SEL_ERR and SEL_RES will be set.

If seq. 2b is used the both outputs SEL_OP and SEL_CL are set after the activation of SEL_GRT. In the next step the inputs CMD_OP or CMD_CL together with the CMD_EXE input will activate the command, i.e. activation of output EXE_OP or EXE_CL.

If seq. 2a is used one of the input signals CMD_OP or CMD_CL are set at the selection. This cause an activation of one of the outputs SEL_OP or SEL_CL. In the next step the CMD_EXE will be activated, which cause EXE_OP or EXE_CL to be set.

If seq. 3 is used the both outputs SEL_OP and SEL_CL are set after the activation of SEL_GRT. In the next step the inputs CMD_OP or CMD_CL are set. This cause an activation of only one of the outputs SEL_OP or SEL_CL. Then the operator has to set CMD_EXE. This signal causes either EXE_OP or EXE_CL to be set.

When EXE_OP or EXE_CL are set, the timer T_SPV_ST_CMD is initialized and there has to be a change in the position indication (OP_DEFI and CL_DEFI) before this time expires, otherwise the CMD_ERR and the

SEL_RES will be set high during one program execution cycle. When both OP_DEFI and CL_DEFI are equal to 0 during the time T_SPV_POS_FAIL it indicates a running switch (intermediate position).

The parameter T_PLS is the time the outputs EXE_OP or EXE_CL will be activated. The parameter ALWAYS_ACT_OUT decides whether an request of opening an opened apparatus should go through and energize the relay or not.

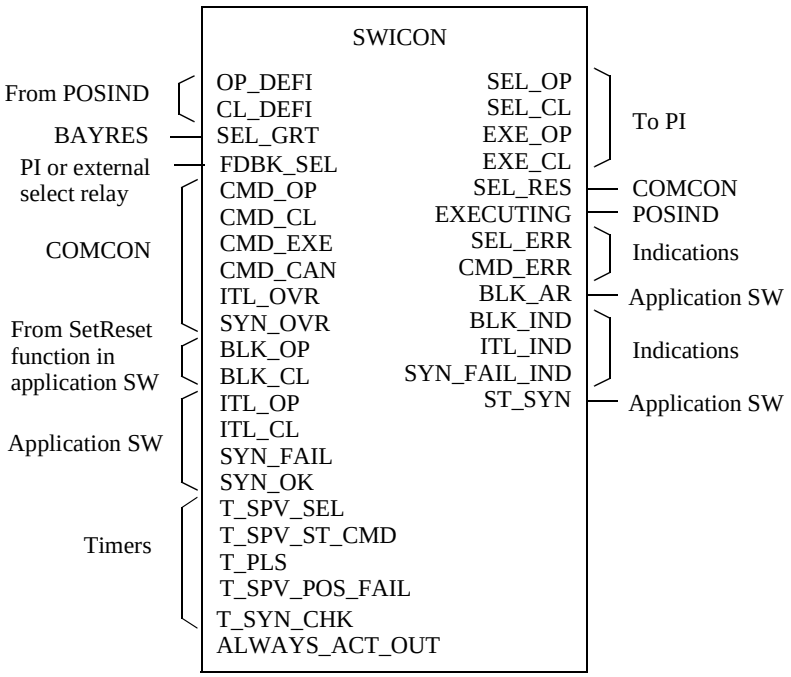

Figure 14: Function block SWICON

3.4.9.1 Synchrocheck

SWICON works with different connections for the synchro-check function. The base function is to start the synchro check (ST_SYN) and supervise the time until the conditions are fulfilled. When the signal ST_SYN is activated, the command supervision is stopped until the time T_SYN_CHK has elapsed. When the synchronisation conditions are fulfilled the input SYN_OK is set. At this time the supervision of the synchro-check stops and the supervision of the command starts.

If the SYN_OK input is not set until the time T_SYN_CHK has elapsed, an output SYN_FAIL_IND is set. This output is also set if the input SYN_FAIL is set.

If there is no synchro-check connected, the input SYN_OK shall be set to true and the input SYN_FAIL shall be set to false.

3.4.9.2 Autoreclose

The BLK_AR signal is used to block the autoreclose when the breaker is selected for operation. This is to prevent an autoreclose when the breaker is operated manually or automatically. A trip in this case means that the

breaker is closed on a fault situation and therefore should not reclose. This signal is reset at the same time as SEL_RES if it is operating in open direction.

3.4.9.3 Parameters

T_SPV_SEL:

Parameter defining supervision time for selection. FDBK_SEL must be high within this time.

T_SPV_ST_CMD:

Parameter defining supervision time for the apparatus to start to move after a command. If the apparatus does not start, the selection and command are cancelled.

T_PLS:

Parameter defining the time for the output command pulse.

T_SPV_POS_FAIL:

If the apparatus does not reach the new position within this time for run time supervision, the selection and command are cancelled.

T_SYN_CHK:

Parameter defining supervision time for the synchro-check. The timer starts when the ST_SYN output is set. The timer is stopped when SYN_OK or SYN_FAIL is set or the position indication is changed.

ALWAYS_ACT_OUT:

The parameter is set when the customer would like to energize apparatuses when making an opening or closing command of an already opened or closed apparatuses respectively.

4 Configurations

4.1 Connections to other functions

This part describes type solutions for connection to other application functions. All functions are described in separate chapters.

4.1.1 Reservation function

The reservation function is primarily a method to transfer interlocking information from other bays in a safe way.

To reserve other bays, the BAYRES module needs interaction with the bays that must be reserved. Note that only bays that must be reserved or need to reserve other bays must have these connections.

The question of which bays that should be reserved by this bay is delivery specific. In general there are three ways:

- Only the bays that influence the interlocking conditions must be reserved.
- The whole voltage level must be reserved. All other bays on this busbar voltage level must be blocked.
- The whole station must be reserved. All other bays in the station must be blocked.

The connections to reserve the apparatuses within the own bay are shown in figure 15. The timing diagram is shown in figure 16. The reservation function follows the steps below:

1. The selection signal in the packed input signal CMDS_x to COMCON is activated when an apparatus is selected for operation. COMCON sets the REQ_SEL output.
2. The signal REQ_SEL activates the RSV_BAYS output via REQ_SEL_x in BAYRES for reserving other bays. After successful acknowledgement from other bays, the select output (SEL_GRT_x) is set to inform that it has reached a reserved state. In this state, it will not accept other requests, which ensures that no other operations are possible in this bay.
3. After acknowledgement from all bays, the select output (SEL_GRT_x) from BAYRES activates the SEL_GRT in COMCON and allows the execute command to pass through.
4. When SEL_GRT in SWICON is activated, SWICON with the input signals CMD_OP/CMD_CL/CMD_EXE from COMCON gives an execution signal (open/close) using the output signals SEL_OP/CL and EXE_OP/CL.
5. The signal SEL_RES is resetting the selection request (REQ_SEL) after successful operation (that is, new position reached) or command error. SEL_RES is active until SEL_GRT is reset.

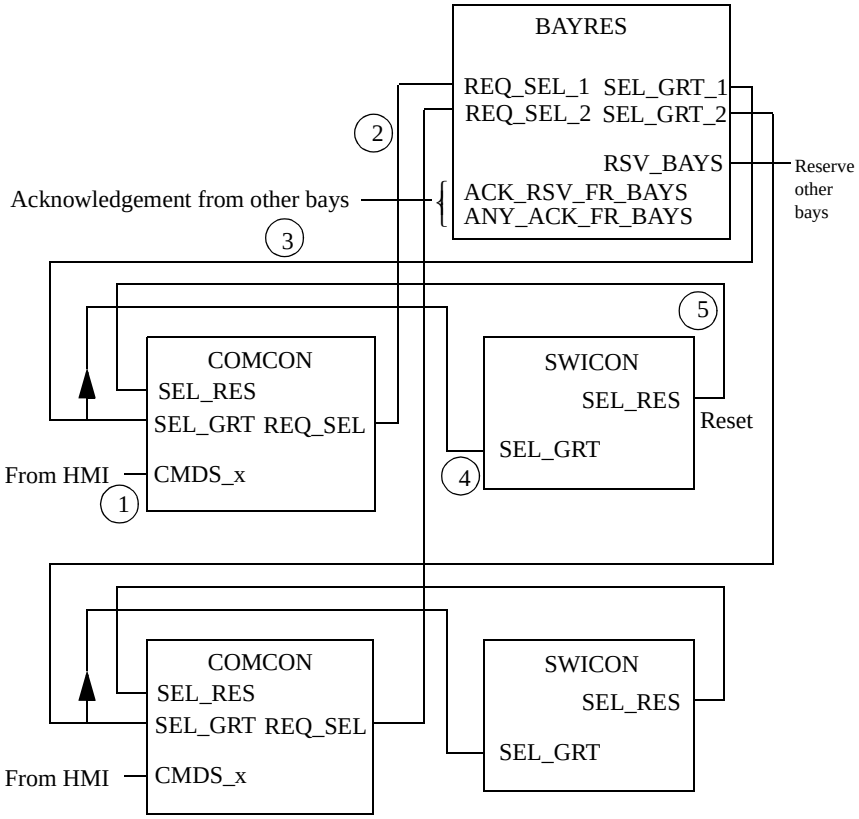

Figure 15: The reservation function within the own bay

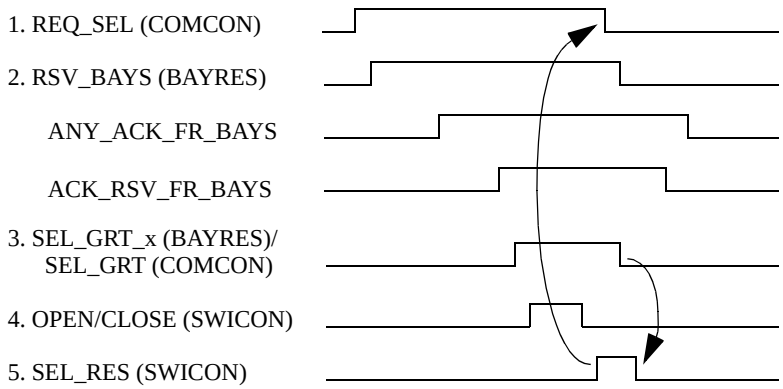

Figure 16: Timing diagram for the reservation function

For reservation of other bays, signal exchange between the bays is necessary. The signals to reserve other bays and signals to reserve the own bay from other bays are shown in figure 17, which describes the receiving and sending part of the reservation function. Receive function blocks are used to receive the information from other bays.

The module BAYRES requests the reservation of other bays with RSV_BAYS and needs to know if other bays are reserved or not. It receives the acknowledgements on the ACK_RSV_FR_BAYS input, which specifies that all bays are reserved and on ANY_ACK_FR_BAYS that any bay is reserved. It also checks the communication status (VALID_TX).

The logic to gather these signals from the requested number of bays (in this example from three bays X, Y, Z) is delivery specific and made with the RSV_I module. This is because the BAYRES is independent of the number of bays to communicate with.

When the request is coming from another bay, there is one signal (RSV_REQ_FR_BAY) for reservation request. VALID_RSV_REQ is the signal for valid request from any bay.

With the inputs PAR_REQ_INT_x (x = 1,...8) set to 1= TRUE, it is possible to suppress the reservation of other bays at a request select (REQ_SEL) from a specific apparatus (1,...8) in the own bay. That is, the BAYRES only reserves the own bay.

The signal BLK_RSV blocks the reservation. That is, no reservation can be made from the own bay or any other bay. This can be set via a binary input from an external device to prevent operations from another operator place at the same time. This function can be overridden in the own bay with the OVERRIDE signal, for example, from the HMI.

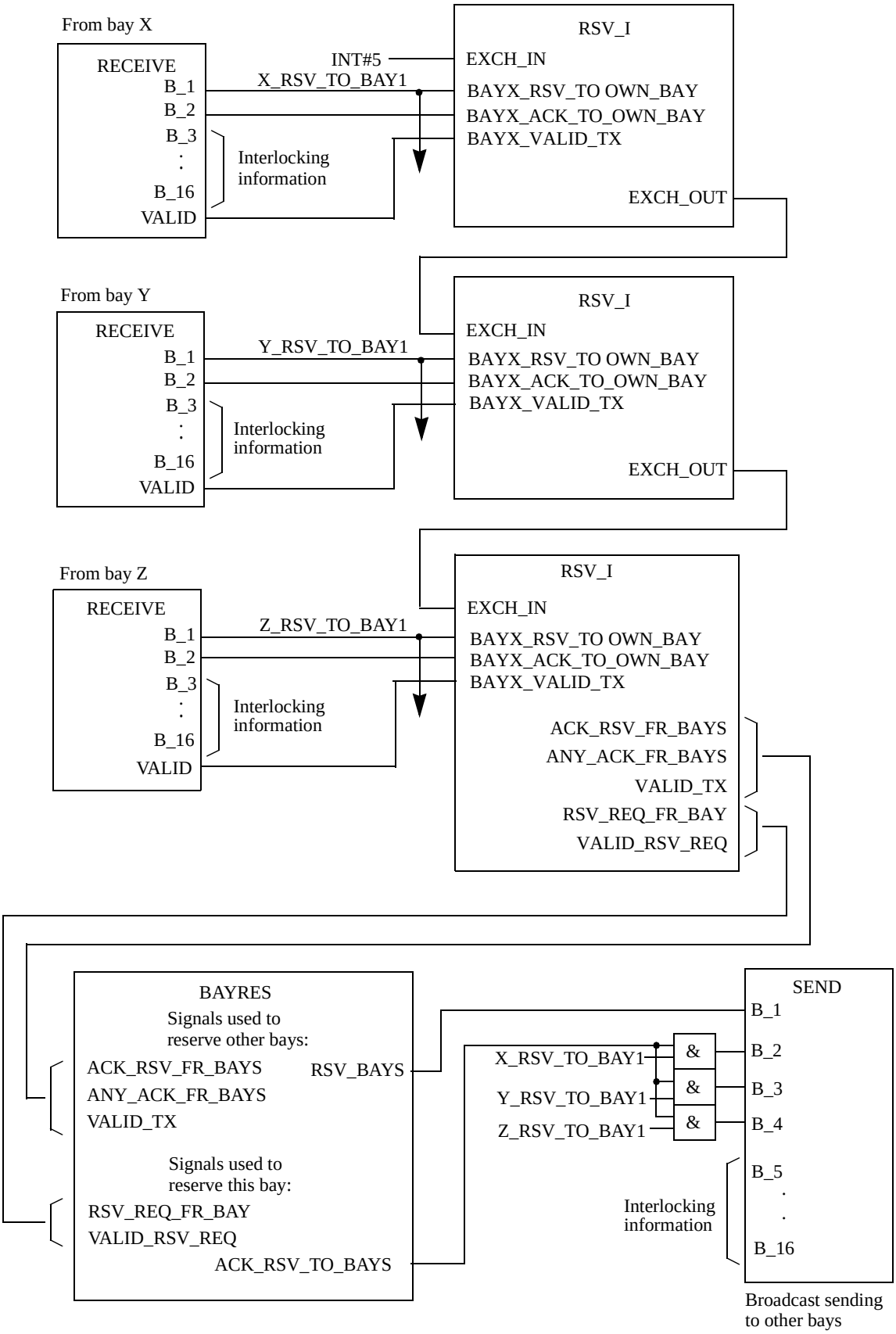

Figure 17: The reservation function between bays

Figure 17 shows also the sending part of the reservation function. From this part, the request (RSV_BAYS) from BAYRES to reserve other bays are sent to other bays by broadcast, that is, to all bays at the same time. Send function blocks are used to send the information to other bays.

The connection for acknowledgement (ACK_RSV_TO_BAYS) from BAYRES gives the result that only the bay that asked for reservation gets the acknowledgement back.

In REC 580, one or more Send function blocks are used to broadcast information from one REC 580. One or several REC 580s are configured to receive this information. Each Receive function block can only get information from one Send function block.

The first bit in the Send function block is used for reserve request of other bays (RSV_BAYS in BAYRES). This signal must be steady, so the reserve request equals true means reserve and equals false means release.

After this reserve request bit, there is one reserve acknowledgement bit (ACK_RSV_TO_BAYS in BAYRES) for each bay that can reserve the bay. So if three bays can reserve the bay, three signals are used.

ACK_RSV_TO_BAYS is reset after RSV_REQ_FR_BAY is reset. If the RSV_REQ_FR_BAY remains (for example due to communication error), ACK_RSV_TO_BAYS is reset a time T_SPV_CAN_RSV after VALID_RSV_REQ is reset.

After the reserve acknowledgement signals, the apparatus positions are needed for the interlocking. This information can be of these types:

- Busbar A and busbar B is connected
- Busbar A and busbar B is disconnected

This means that the position for each apparatus is not distributed, if not needed.

If this interlocking information needs additional event blocks for sending, the first bit of all the extra blocks is a reserve acknowledgement signal to acknowledge any bays, see figure 18.

These steps can be defined for the complete execution:

- The command execution bay receives a request for operation, for example by a selection from HMI.
- If the bay is reserved the command is cancelled.
- If other bays should be reserved, the reserve request bit is set in the send function block.
- The request information is broadcasted to all other bays.
- The receiving bays put the data to the receive function blocks in the different bays.
- The bays that must be reserved, read the request from the receive function block, block all commands in the own bay, evaluate the

apparatus positions, and set the interlocking information and the reserve acknowledgement on the send function block.

- The response is broadcasted to all other bays.
- The other bays configured to read this message put the data to the receive function blocks.
- The command executing bay receives reserve acknowledgement signals from all the bays that were requested. If one or several bays do not respond within a predefined time, the command is cancelled.
- When all reserve acknowledgement signals are received, the interlocking condition is evaluated. If the command is allowed, it will be performed.
- When the command is executed, the reserve request bit is reset on all send function blocks and broadcasted in the same way as the reserve request.
- The reset reserve request bit is interpreted as a release in the bay that was reserved. So the bay is free, and the reserve acknowledgement bit is reset on the send function block and broadcasted back.
- The command executing bay waits until all reserve acknowledgement signals are reset. When this is done, the bay is ready for a new command.

Example:

Figure 18 illustrates the above described step-by-step command execution and bay-to-bay communication.

The example station is a double busbar with only two lines and one bus coupler. The bus coupler also handles the busbar earthing switches.

In this station, Line 1 and Line 2 need information from the bus coupler and the bus coupler need information from Line 1 and Line 2.

Figure 18 illustrates the station-wide communication. The signals not used in the figure are removed.

The bus coupler has information for two send function blocks. But for the two lines, one block is enough.

Besides these outputs, a valid bit is available on the command function blocks..

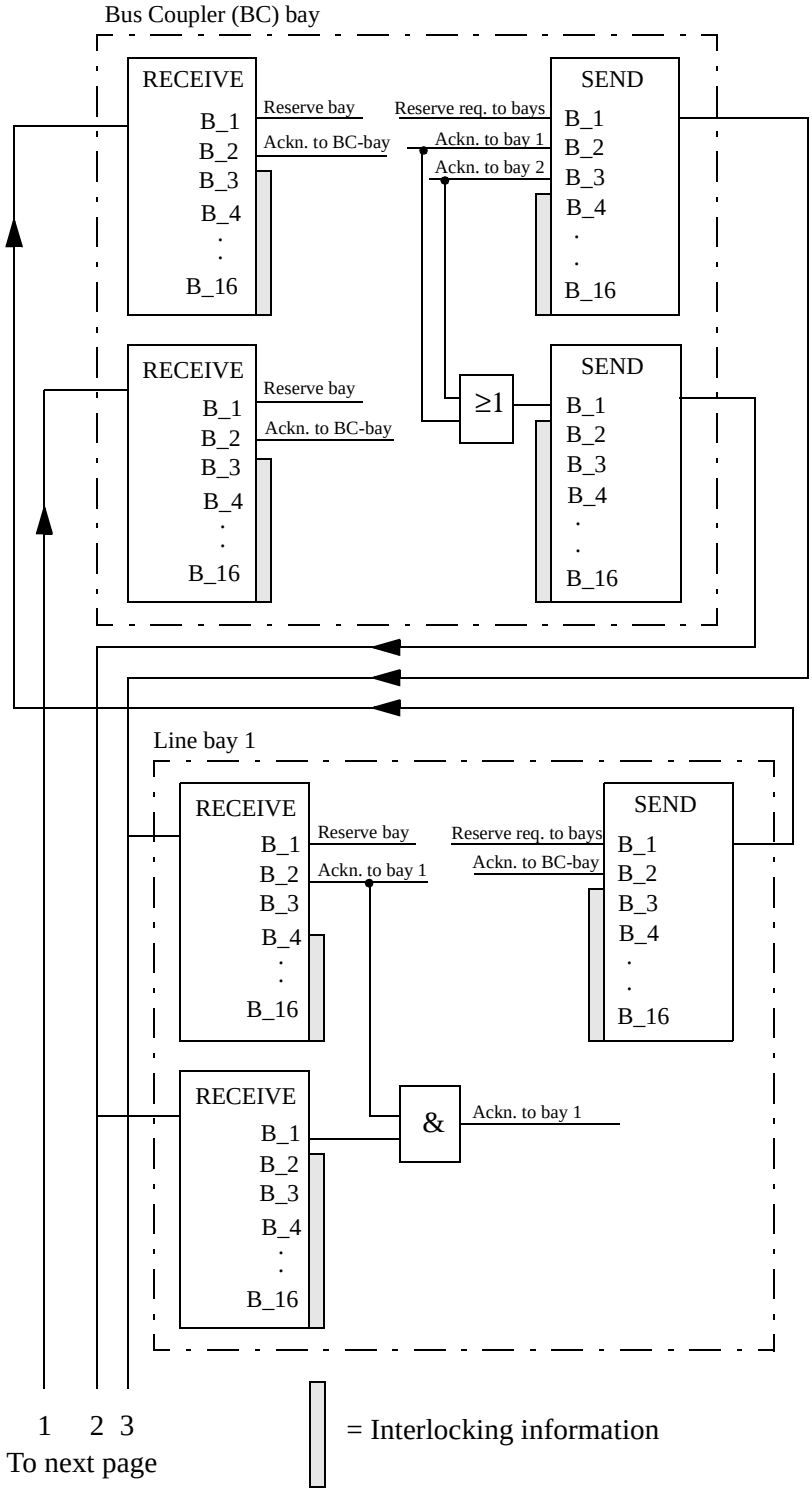

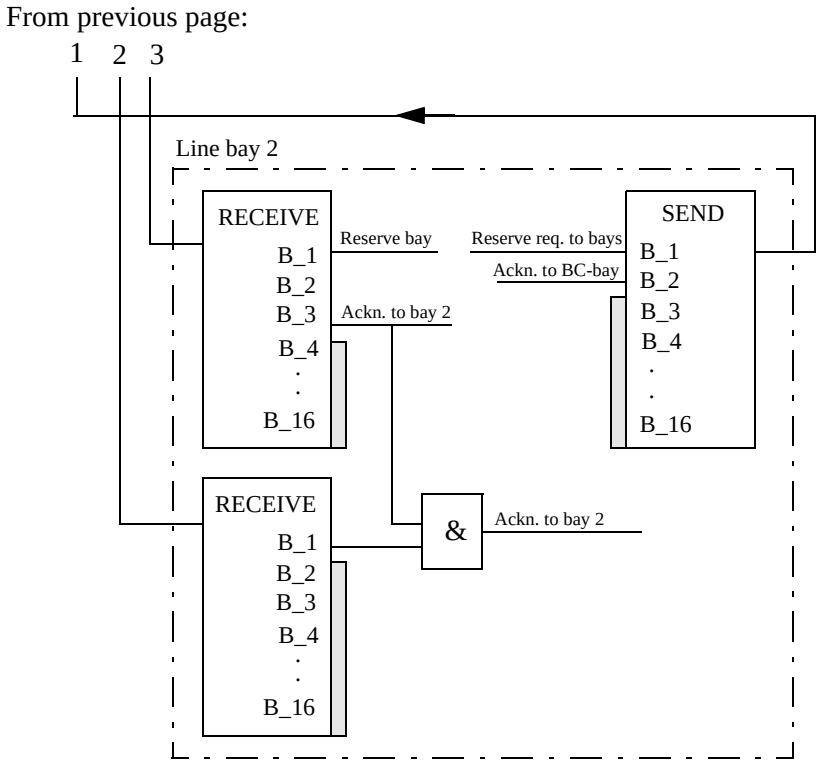

Figure 18: The principle of the communication between bays

4.1.2 Interlocking

Figure 19 shows the connection between an interlocking module and apparatus control modules. The input is activated when the apparatus is interlocked. The interlocking information within the REC 580 control terminal are taken from the binary input boards. Information from other bays are transferred over the station bus. The “Reservation function” on page 46 describes the method for transferring these data.

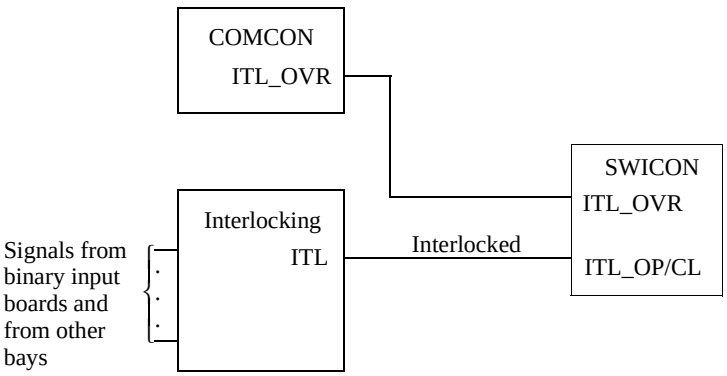

Figure 19: Connection of an interlocking module to apparatus control modules

4.1.3 Synchrocheck

Connections between the apparatus control modules and the synchro-check function can be made either for the built-in synchro-check module or for an external synchro-check/synchronising equipment. Figure 20 shows the connections for a synchro-check function that checks the synchro-check condition continuously and gives a signal on SYN_OK if there is synchronism. The close execution signal from SWICON will be activated only if SYN_OK comes in during the time T_SYN_CHK. If the override function is used, the signal SYN_OVR from COMCON must be activated before the execution is performed.

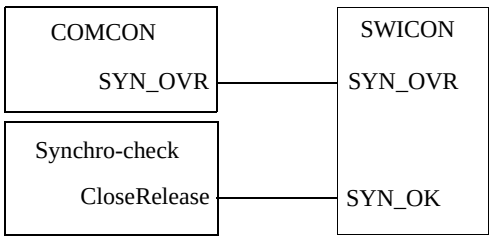

Figure 20: Connections between the built-in synchro-check module and the apparatus control modules

Figure 21 shows an example of configuration when an external synchro-check/synchronising equipment is used, for example, type RES 010. For the external synchronising equipment, the close command is handled outside REC 580. At the close command from the operator, SWICON activates the ST_SYN outputs, which starts the synchronisation. ST_SYN will be reset when SYN_OK is activated.

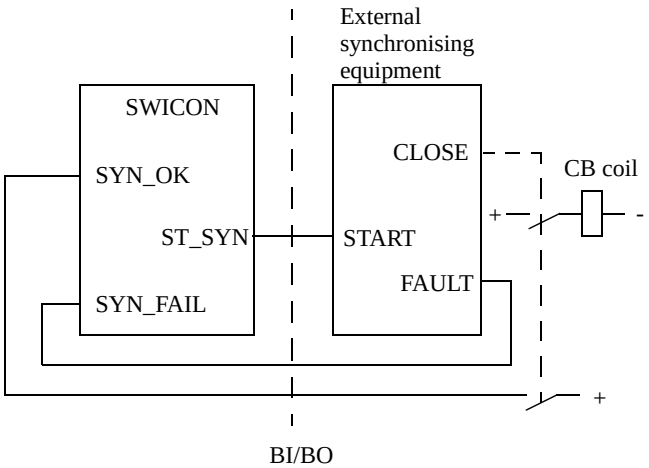

Figure 21: Connections between external synchronising equipment and the apparatus control modules

4.1.4 Autoreclosing

Figure 22 shows the interaction between the autoreclosing (AR) module and the apparatus control modules. The signal BLK_AR from SWICON is used to block the autoreclose function at the moment the circuit breaker is under operation.

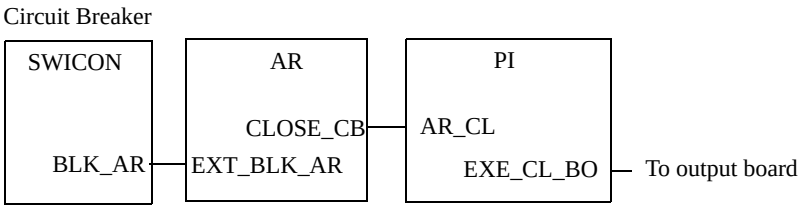

Figure 22: Connections between autoreclosing (AR) module and apparatus control modules

5 Appendix

5.1 Function blocks

5.1.1 AUTHALL

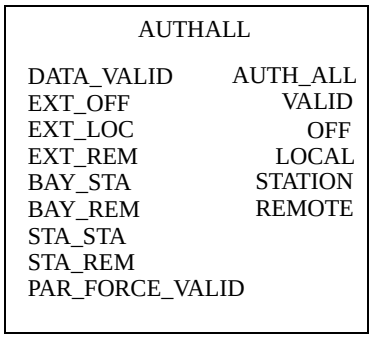

Figure 23: Function block for Authority Allocation

5.1.2 L_APPCMD

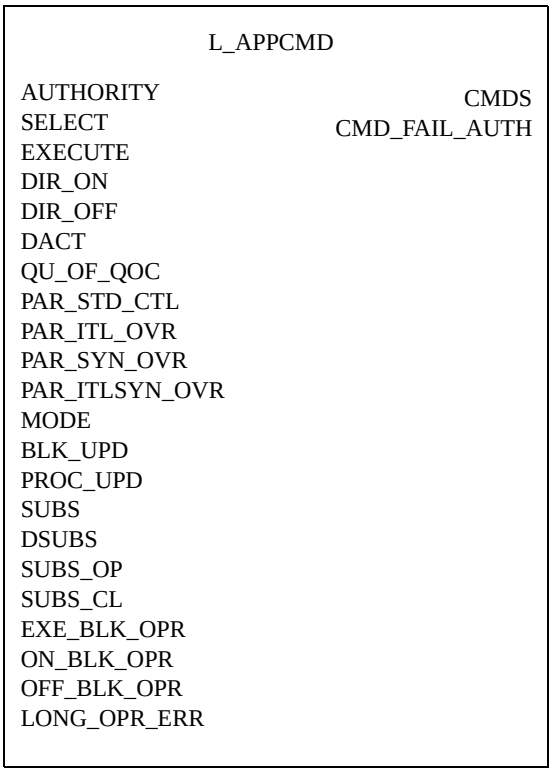

Figure 24: Function block for LON Switch Command

5.1.3 S_APPCMD

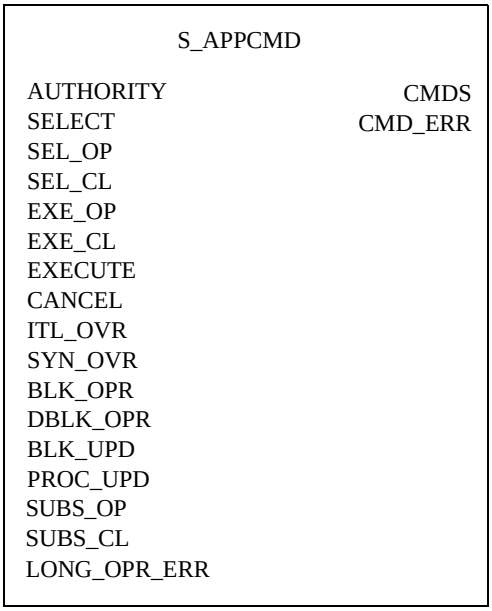

Figure 25: Function block for Standard Switch Command

5.1.4 L_APPRSP

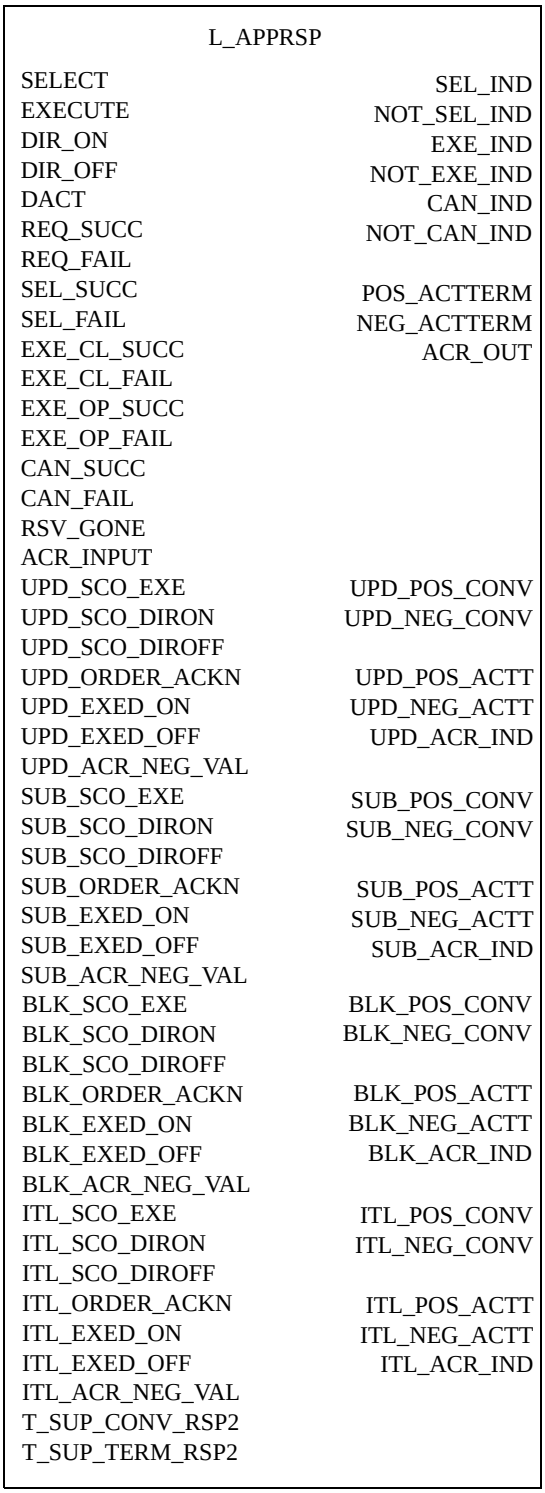

Figure 26: Function block for LON Switch Command Response

5.1.5 RSV_I

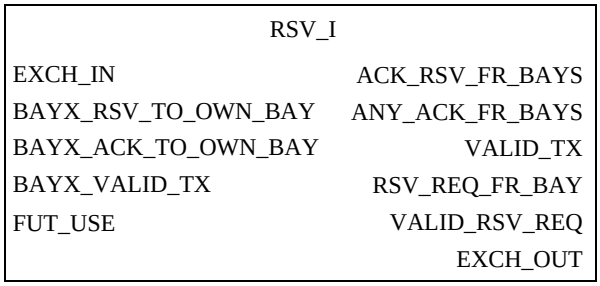

Figure 27: Function block for Reserve Input

5.1.6 BAYRES

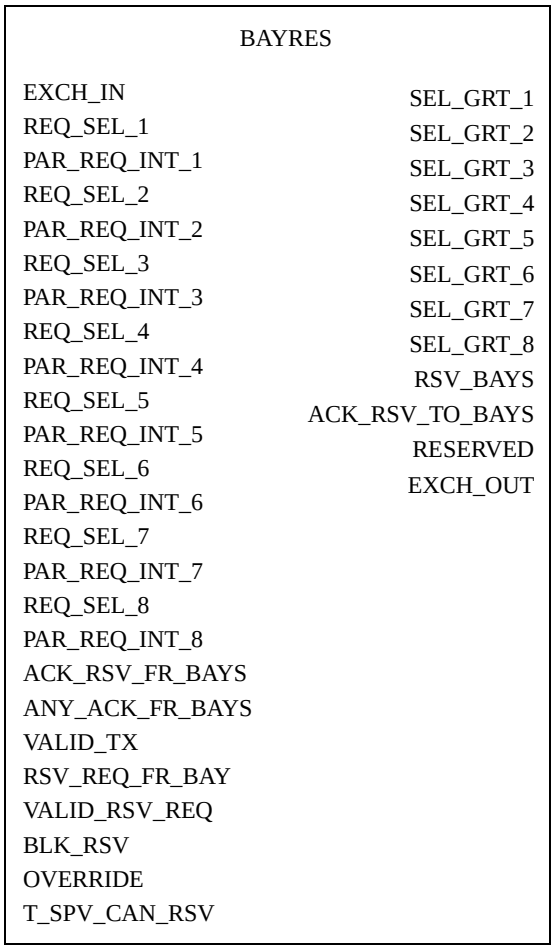

Figure 28: Function block for Bay Reserve

5.1.7 COMCON

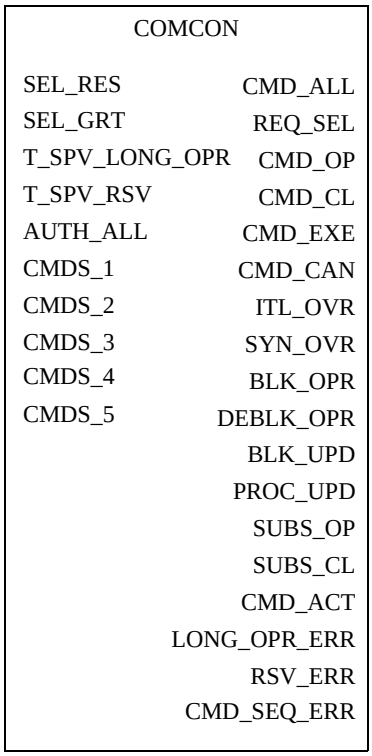

Figure 29: Function block for Command Control

5.1.8 PI

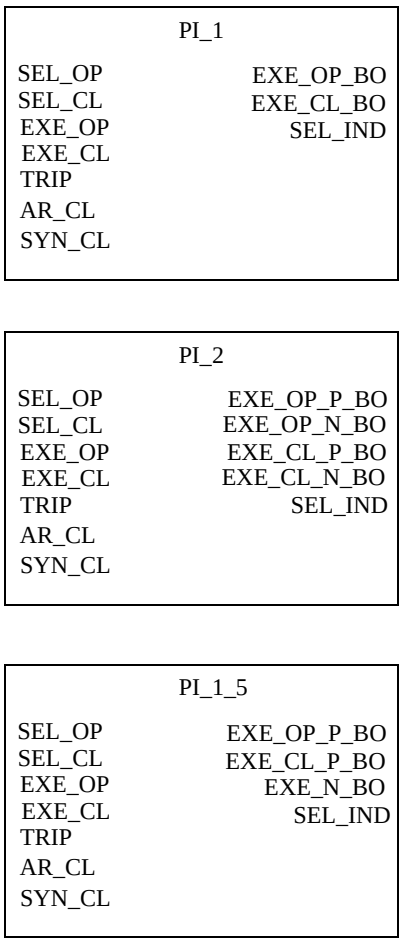

Figure 30: Function blocks for Process Interface PI_1, PI_2 and PI_1_5

5.1.9 POSIND

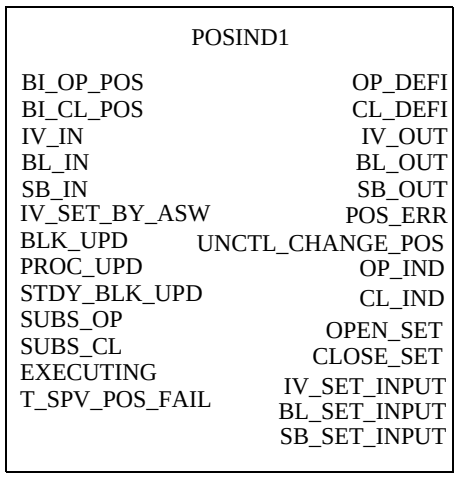

Figure 31: Function block for POSIND1

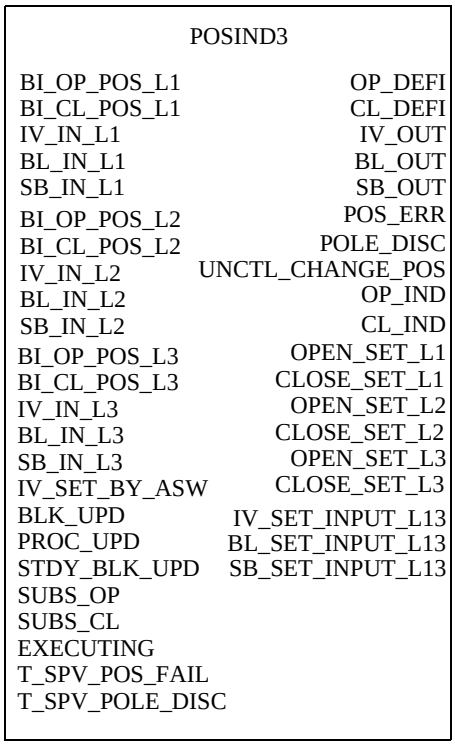

Figure 32: Function block for POSIND3

5.1.10 SWICON

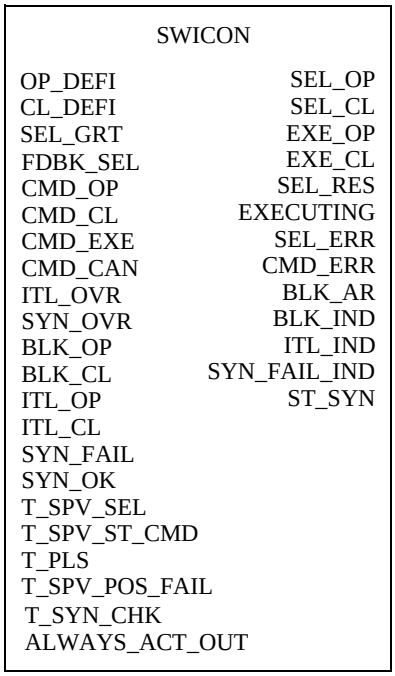

Figure 33: Function block for SWICON

5.2 Signal lists

5.2.1 AUTHALL

Table 1: Signal list for Authority Allocation (AUTHALL)

Signal	Type	In/out	Description
DATA_VALID	BOOL	In	Input indicating that the input data is valid.
EXT_OFF	BOOL	In	Input indicating that the external switch is in off position.
EXT_LOC	BOOL	In	Input indicating that the external switch is in local position.
EXT_REM	BOOL	In	Input indicating that the external switch is in remote position.
BAY_STA	BOOL	In	Signal is set to set the operator place to station for the bay.
BAY_REM	BOOL	In	Signal is set to set the operator place to remote for the bay.
STA_STA	BOOL	In	Signal is set to set the operator place to station for the station.
STA_REM	BOOL	In	Signal is set to set the operator place to remote for the station.
PAR_FORCE_VALID	BOOL	In	To force the output to show the positions from the station HMI, though the VALID output is false, this input is set to true.
AUTH_ALL	INT	Out	Output containing the packed information of the other outputs.
VALID	BOOL	Out	Output indicating that the selected operator place is valid.
OFF	BOOL	Out	Output indicating the no operator place is selected.
LOCAL	BOOL	Out	Output indicating that Local operator place is selected.
STATION	BOOL	Out	Output indicating that Station operator place is selected.
REMOTE	BOOL	Out	Output indicating that Remote operator place is selected.

5.2.2 L_APPCMD

Table 2: Signal list for LON Switch Command (L_APPCMD)

Signal	Type	In/out	Description
AUTHORITY	BOOL	In	Authority for this function.
SELECT	BOOL	In	Command from base software: Switch selection.
EXECUTE	BOOL	In	Command from base software: Switch exectution.
DIR_ON	BOOL	In	Command from base software: Switch direction opening.
DIR_OFF	BOOL	In	Command from base software: Switch direction closing.
DEACT	BOOL	In	Command from base software: Switch cancel operation.
QU_OF_QOC	SINT	In	Command from base software: Qualifier of command.
PAR_STD_CTL	SINT	In	Parameter QU value for control with interlocking and synchr.
PAR_ITL_OVR	SINT	In	Parameter QU value for control with interlock override.
PAR_SYN_OVR	SINT	In	Parameter QU value for control with synchrocheck override.
PAR_ITLSYN_OVR	SINT	In	Parameter for control with interlocking and synchrocheck override.

Table 2: Signal list for LON Switch Command (L_APPCMD) (Continued)

Signal	Type	In/out	Description
MODE	INT	In	Parameter for selecting single or double control commands, Select with / without direction or Execute with / without direction: • 0 = single command: Select + direction + execute • 1 = double command: Select -> execute + direction • 2 = double command: Select + direction -> execute • 3 = triple command: Select -> direction -> execute
BLK_UPD	BOOL	In	Command for set of position indication freezing.
PROC_UPD	BOOL	In	Command for reset of position indication freezing.
SUBS	BOOL	In	Signal for setting a substitution.
DESUBS	BOOL	In	Signal for resetting a substitution.
SUBS_OP	BOOL	In	Substitution for open position (force open indication).
SUBS_CL	BOOL	In	Substitution for closed position (force close indication).
EXE_BLK_ OPR	BOOL	In	Switch operation blocking command to be executed, including one of the next following signals set.
ON_BLK_ OPR	BOOL	In	Switch operation blocking to be set, executed with EXE_BLK_OPR.
OFF_BLK_ OPR	BOOL	In	Switch operation blocking to be reset, executed with EXE_BLK_OPR.
LONG_OPR_ ERR	BOOL	In	Long operation error output from COMCON to reset the error detection.
CMDS	INT	Out	Packed in one signal for COMCON CMDS_x signal.
CMD_FAIL_ AUTH	BOOL	Out	The output is set if the authority for a command is not true when a command is activated.

5.2.3 S_APPCMD

Table 3: Signal list for Standard Switch Command (S_APPCMD)

Signal	Type	In/Out	Description
AUTHORITY	BOOL	In	Authority for this function.
SELECT	BOOL	In	Selection for relating switch.
SEL_OP	BOOL	In	Selected for opening for relating switch.
SEL_CL	BOOL	In	Selected for closing for relating switch.
EXE_OP	BOOL	In	Execution for opening for relating switch.
EXE_CL	BOOL	In	Execution for closing for relating switch.
EXECUTE	BOOL	In	Execution for relating switch.
CANCEL	BOOL	In	Cancel selection for relating switch.
ITL_OVR	BOOL	In	Control handling: without interlocking.
SYN_OVR	BOOL	In	Control handling: without synchrocheck.
BLK_OPR	BOOL	In	Blocking of operation for relating switch.
DEBLK_OPR	BOOL	In	Reset operation blocking for relating switch.

Table 3: Signal list for Standard Switch Command (S_APPCMD) (Continued)

Signal	Type	In/Out	Description
BLOCK_UPD	BOOL	In	Process updating blocked, position to be frozen.
PROC_UPD	BOOL	In	Process updating active, reset of position freezing function.
SUBS_OP	BOOL	In	Substitution for open position (force open indication).
SUBS_CL	BOOL	In	Substitution for closed position (force close indication).
LONG_OPR_ERR	BOOL	In	Long operation error output from COMCON to reset the error detection.
CMDS	INT	Out	Packed in one signal for COMCON CMDS_x signal.
CMD_ERR	BOOL	Out	Error detection output. It is set if error in the command sequence is detected or the authority for a command is not true.

5.2.4 L_APPRSP

Table 4: Signal list for LON Switch Command Response (L_APPRSP)

Signal	Type	In/out	Description
SELECT	BOOL	In	Command from base software: Switch selection.
EXECUTE	BOOL	In	Command from base software: Switch exectution.
DIR_ON	BOOL	In	Command from base software: Switch direction opening.
DIR_OFF	BOOL	In	Command from base software: Switch direction closing.
DEACT	BOOL	In	Command from base software: Switch cancel operation.
REQ_ SUCC	BOOL	In	Request is successful.
REQ_ FAIL	BOOL	In	Request is not successful.
SEL_SUCC	BOOL	In	Selection is successful.
SEL_FAIL	BOOL	In	Selection is not successful.
EXE_CL_ SUCC	BOOL	In	Closing is successful.
EXE_CL_FAIL	BOOL	In	Closing is not successful.
EXE_OP_ SUCC	BOOL	In	Opening is successful.
EXE_OP_FAIL	BOOL	In	Opening is not successful.
CAN_SUCC	BOOL	In	Cancelling is successful.
CAN_FAIL	BOOL	In	Cancelling is not successful.
RSV_GONE	BOOL	In	Reservation resettet: switch has finished controlling (all activi-ties for relating switch are reset).
ACR_INPUT	SINT	In	Integer value for additional information on switch state (i.e. interlocked, blocked,...).
UPD_SCO_ EXE	BOOL	In	Update position indication freezing execution.
UPD_SCO_ DIRON	BOOL	In	Update position indication freezing order.

Table 4: Signal list for LON Switch Command Response (L_APPRSP) (Continued)

Signal	Type	In/out	Description
UPD_SCO_ DIROFF	BOOL	In	Update position indication freezing reset.
UPD_ORDER_ ACKN	BOOL	In	Update position indication freezing command is acknowledged.
UPD_EXED_ ON	BOOL	In	Update position indication freezing is executed.
UPD_EXED_ OFF	BOOL	In	Update position indication freezing is reset.
UPD_ACR_ NEG_VAL	SINT	In	Integer value for additional information on substitution negative response reason (i.e. auth. invalid).
Same for SUBS, BLK and ITL as for UPD...	...		Same principle as above for: Substitution, Control Block and Interlock Override.
T_SUP_CONV_ RSP2	TIME		See setting table.
T_SUP_TERM_ RSP2	TIME		See setting table.
SEL_IND	BOOL	Out	Command response: selection running.
NOT_SEL_IND	BOOL	Out	Command response: no positive action on switch selection.
EXE_IND	BOOL	Out	Command response: execution running.
NOT_EXE_IND	BOOL	Out	Command response: no positive action on switch execution.
CAN_IND	BOOL	Out	Command response: switch command was cancelled.
NOT_CAN_IND	BOOL	Out	Command response: no positive action on switch cancelling.
POS_ACTTERM	BOOL	Out	Command response: positive activation termination, switch command was successfully finished.
NEG_ACTTERM	BOOL	Out	Command response: no positive activation termination, switch command was not successfully finished.
ACR_OUT	SINT	Out	Command response: actual integer value for additional information on switch state.
UPD_POS_CONV	BOOL	Out	Command response: Update position indication freezing acknowledged.
UPD_NEG_CONV	BOOL	Out	Command response: Update position indication freezing not acknowledged.
UPD_POS_ACTT	BOOL	Out	Command response: Update position indication freezing executed.
UPD_NEG_ACTT	BOOL	Out	Command response: Update position indication freezing not executed.
UPD_ACR_IND	SINT	Out	Integer value for additional information on substitution negative response reason (i.e. auth. invalid), for succesful execution set to 0.
Same for other 3 response signals i.e. SUB, BLK and ITL			

5.2.5 RSV_I

Table 5: Signal list for Reserve Input (RSV_I)

Signal	Type	In/out	Description
EXCH_IN	INT	In	Input for exchange signal between different RSV_I elements.
BAYX_RSV_TO_OWN_ BAY	BOOL	In	Input from other bay to reserve this bay.
BAYX_ACK_TO_OWN_ BAY	BOOL	In	Input from another bay that it is reserved by this bay.
BAYX_ VALID_TX	BOOL	In	Input from the communication indicating that the communication with all bays that are reserved, is working.
FUT_USE	BOOL	In	Input to indicate that this bay is for future use.
ACK_RSV_ FR_BAYS	BOOL	Out	Acknowledgement from all other bays which must be reserved when an apparatus is selected for operation.
ANY_ACK_ FR_BAYS	BOOL	Out	Acknowledgement from any other bay which must be reserved when an apparatus is selected for operation.
VALID_TX	BOOL	Out	Signal indicating that the communication with all bays that are reserved, is working.
RSV_REQ_ FR_BAY	BOOL	Out	Request from other bay to reserve this bay.
VALID_RSV_REQ	BOOL	Out	Check if the request of reserving the bay is valid.
EXCH_OUT	INT	Out	Output for exchange signal between different RSV_I elements.

5.2.6 BAYRES

Table 6: Signal list for Bay Reserve (BAYRES)

Signal	Type	In/out	Description
EXCH_IN	INT	In	Input for exchange signal between different BAYRES blocks.
REQ_SEL_x	BOOL	In	Signal for each operable apparatus (x) that is requesting a selection for operation. When one of these signals is true the reservation function starts.
PAR_REQ_INT_x	BOOL	In	A parameter for each apparatus (x) which states that only reservation of the own bay is required. If the parameter is set only the own bay is reserved.
ACK_RSV_FR_BAYS	BOOL	In	Input from all other bays that they are reserved by this bay.
ANY_ACK_FR_BAYS	BOOL	In	Input from all other bays. If any one of them is reserved by this bay. This input must be false before a new reservation is allowed.
VALID_TX	BOOL	In	Input from the communication indicating that the communication with all bays that are reserved, is working.
RSV_REQ_FR_BAY	BOOL	In	Input from other bay to reserve this bay.
VALID_RSV_REQ	BOOL	In	When this input is true the reservation request from another bay is valid.
BLK_RSV	BOOL	In	When this input is true no reservation is possible. The interlock override function is not blocked.

Table 6: Signal list for Bay Reserve (BAYRES) (Continued)

Signal	Type	In/out	Description
OVERRIDE	BOOL	In	Signal is set when there has been a command to override the interlocking and/or reservation.
SEL_GRT_x	BOOL	Out	Signal to the corresponding operable apparatus (x). When this signal is set, the reservation is made and the apparatus is allowed to operate.
RSV_BAYS	BOOL	Out	Output to the other bays which must be reserved when an apparatus is selected for operation.
ACK_RSV_ TO_BAYS	BOOL	Out	Output to acknowledge reservation, requested by another bay.
RESERVED	BOOL	Out	Output to indicate that the bay is reserved.
EXCH_OUT	INT	Out	Output for exchange signal between different BAYRES blocks.
T_SPV_ CAN_RSV	TIME		See setting table.

5.2.7 COMCON

Table 7: Signal list for Command Control (COMCON)

Signal	Type	In/out	Description
SEL_RES	BOOL	In	Signal which resets the selection. Reset is made: 1. after a successful operation, 2a. after selection time-out (no open or close), 2b. after direction time-out (no execute), 3. when reservation failed, 4. when an interlock occurred, 5. in blocking state, 6. cancel after selection.
SEL_GRT	BOOL	In	When this signal is set, the reservation is made and the apparatus is allowed to operate.
T_SPV_LONG_OPR	TIME		See setting table.
T_SPV_RSV	TIME		See setting table.
AUTH_ALL	INT	In	An unsigned integer containing the number of the current operator place.
CMDS_x	INT	In	The commands, from each operator place, packed in an unsigned integer.
CMD_ALL	INT	Out	The number of the operator place that has started the command sequence.
REQ_SEL	BOOL	Out	Signal for each operable apparatus that is requesting a selection for operation. When this signal is true the reservation function starts.
CMD_OP	BOOL	Out	Signal is set at selection or execution command and indicates a open operation.
CMD_CL	BOOL	Out	Signal is set at selection or execution command and indicates a close operation
CMD_EXE	BOOL	Out	Signal is set when the command has to be executed.

Table 7: Signal list for Command Control (COMCON) (Continued)

Signal	Type	In/out	Description
CMD_CAN	BOOL	Out	Signal is set after selection is made, when cancelling of the selection is desired.
ITL_OVR	BOOL	Out	Signal is set when there has been a command to override the interlocking.
SYN_OVR	BOOL	Out	Signal is set when there has been a command to override the synchro-check.
BLK_OPR	BOOL	Out	Signal for blocking operation of an apparatus.
DEBLK_OPR	BOOL	Out	Signal for deblocking operation of an apparatus.
BLK_UPD	BOOL	Out	This signal will set the internal update block function for the apparatus.
PROC_UPD	BOOL	Out	Signal that resets the update blocking for an apparatus. It will resume process updating.
SUBS_OP	BOOL	Out	Signal that sets the position indication to open position, when the updating is blocked.
SUBS_CL	BOOL	Out	Signal that sets the position indication to closed position, when the updating is blocked.
CMD_ACT	BOOL	Out	This signal is set when a sequence of operations are in progress e.g. selection or interlocking override.
LONG_OPR_ERR	BOOL	Out	Output indicating that the long operation supervision timer has expired.
RSV_ERR	BOOL	Out	Output indicating that the reservation supervision timer has expired.
CMD_SEQ_ERR	BOOL	Out	Output indicating that the commands in the command sequence weren’t done in a logical sequence.

Table 8: Content of the CMDS_x input for COMCON

Signal	Type	In/out	Description
sel_Des	BOOL	In	Signal showing there is a request of selecting the apparatus.
sel_Op	BOOL	In	Signal showing there is a request of selecting and opening the apparatus.
sel_Cl	BOOL	In	Signal showing there is a request of selecting and closing the apparatus.
exe_Op	BOOL	In	Signal showing there is a request of opening the apparatus.
exe_Cl	BOOL	In	Signal showing there is a request of closing the apparatus.
exe_Des	BOOL	In	Signal showing there is a request of executing the operation (the direction is already given in previous commands).
can	BOOL	In	Signal showing there is a request of cancelling the operation.
itl_Ovr	BOOL	In	Signal showing there is a request of overriding the interlocking function.
syn_Ovr	BOOL	In	Signal showing there is a request of overriding the synchronization function.
blk_Opr	BOOL	In	Signal for blocking operation of an apparatus.
deblk_Opr	BOOL	In	Signal for deblocking operation of an apparatus.

Table 8: Content of the CMDS_x input for COMCON (Continued)

Signal	Type	In/out	Description
blk_Upd	BOOL	In	This signal will set the internal update block function for the apparatus.
proc_Upd	BOOL	In	Signal that resets the update blocking for an apparatus. It will resume process updating.
subs_Op	BOOL	In	Signal that sets the position indication to open position, when the updating is blocked.
subs_Cl	BOOL	In	Signal that sets the position indication to closed position, when the updating is blocked.

5.2.8 PI

Table 9: Signal list for Process Interface (PI_1)

Signal	Type	In/out	Description
SEL_OP	BOOL	In	Signal is set when there will be an order to select the apparatus for an open command.
SEL_CL	BOOL	In	Signal is set when there will be an order to select the apparatus for a close command.
EXE_OP	BOOL	In	Signal is set when there will be an order to open the apparatus.
EXE_CL	BOOL	In	Signal is set when there will be an order to close the apparatus.
TRIP	BOOL	In	Signal is set when there is a trip, it causes the apparatus to open.
AR_CL	BOOL	In	Signal is set when the result of the auto reclose logic closes the apparatus.
SYN_CL	BOOL	In	Boolean Signal is set when the result of the sycnhronization logic closes the apparatus.
EXE_OP_BO	BOOL	Out	Output is set when the apparatus is selected and an open command is given or if any of the commands that doesn't need any selection have to open the switch. Output is used to activate the open command relay.
EXE_CL_BO	BOOL	Out	Output is set when the apparatus is selected and a close command is given. When synchro-check is used the conditions from the synchro-check relay are considered as well. Output is used to activate the close command relay.
SEL_IND	BOOL	Out	Select is set when any or both of the selection inputs are set.

Table 10: Signal list for Process Interface (PI_2)

Signal	Type	In/out	Description
SEL_OP	BOOL	In	Signal is set when there will be an order to select the apparatus for an open command.
SEL_CL	BOOL	In	Signal is set when there will be an order to select the apparatus for a close command.
EXE_OP	BOOL	In	Signal is set when there will be an order to open the apparatus.

Table 10: Signal list for Process Interface (PI_2) (Continued)

Signal	Type	In/out	Description
EXE_CL	BOOL	In	Signal is set when there will be an order to close the apparatus.
TRIP	BOOL	In	Signal is set when there is a trip, it causes the apparatus to open.
AR_CL	BOOL	In	Signal is set when the result of the auto reclose logic closes the apparatus.
SYN_CL	BOOL	In	Boolean Signal is set when the result of the sycnhronization logic closes the apparatus.
EXE_OP_P_BO	BOOL	Out	Output is set when the apparatus is selected for an open command or if any of the commands that doesn't need any selection have to open the apparatus. Output is used to activate the first open command relay.
EXE_OP_N_BO	BOOL	Out	Output is set when the apparatus is executed for an open command or if any of the commands that doesn't need any selection have to open the apparatus. Output is used to activate the second open command relay.
EXE_CL_P_BO	BOOL	Out	Output is set when the apparatus is selected for a close command or if any of the commands that doesn't need any selection have to close the apparatus. Output is used to activate the first close command relay.
EXE_CL_N_BO	BOOL	Out	Output is set when the apparatus is executed for a close command or if any of the commands that doesn't need any selection have to close the apparatus. Output is used to activate the second close command relay.
SEL_IND	BOOL	Out	Select is set when any or both of the selection inputs are set.

Table 11: Signal list for Process Interface (PI_1_5)

Signal	Type	In/out	Description
SEL_OP	BOOL	In	Signal is set when there will be an order to select the apparatus for an open command.
SEL_CL	BOOL	In	Signal is set when there will be an order to select the apparatus for a close command.
EXE_OP	BOOL	In	Signal is set when there will be an order to open the apparatus.
EXE_CL	BOOL	In	Signal is set when there will be an order to close the apparatus.
TRIP	BOOL	In	Signal is set when there is a trip, it causes the apparatus to open.
AR_CL	BOOL	In	Signal is set when the result of the auto reclose logic closes the apparatus.
SYN_CL	BOOL	In	Boolean Signal is set when the result of the sycnhronization logic closes the apparatus.
EXE_OP_P_BO	BOOL	Out	Output is set when the apparatus is selected for an open command or if any of the commands that doesn't need any selection have to open the apparatus. Output is used to activate the first potential of the open command relay.

Table 11: Signal list for Process Interface (PI_1_5) (Continued)

Signal	Type	In/out	Description
EXE_CL_P_BO	BOOL	Out	Output is set when the apparatus is selected for a close command or if any of the commands that doesn't need any selection have to close the apparatus. Output is used to activate the first potential of the close command relay.
EXE_N_BO	BOOL	Out	Output is set when the apparatus is executed for an open or close command or if any of the commands that doesn't need any selection have to operate the apparatus. Output is used to activate the common potential for all grouped command relays in a bay.
SEL_IND	BOOL	Out	Select is set when any or both of the selection inputs are set.

5.2.9 POSIND

Table 12: Signal list for Position Indication 1 (POSIND1)

Signal	Type	In/out	Description
BI_OP_POS	BOOL	In	Input for switch positions; open positions for all phases together.
BI_CL_POS	BOOL	In	Input for switch positions; close positions for all phases together.
IV_IN	BOOL	In	Invalid bit from base software interface for all phase signals together.
BL_IN	BOOL	In	Blocked bit from base software interface for all phase signals together.
SB_IN	BOOL	In	Substituted bit from base software interface all phase signals together.
IV_SET_BY_ASW	BOOL	In	Input for setting of invalid information from application SW (e.g. indication of voltage trip).
BLK_UPD	BOOL	In	Pulse input (from COMCON) for setting of blocking information, positions are frozen.
PROC_UPD	BOOL	In	Pulse input (from COMCON) for resetting of blocking information, positions are updated again.
STDY_BLK_UPD	BOOL	In	Steady input (e.g. from a switch) for setting of blocking information, positions are not updated.
SUBS_OP	BOOL	In	Signal for setting to open position, validity checked by COMCON logic.
SUBS_CL	BOOL	In	Signal for setting to closed position, validity checked by COMCON logic.
EXECUTING	BOOL	In	Input from SWICON, set as long as a command for that object is started or runs.
T_SPV_POS_FAIL	TIME		See setting table.
OP_DEFI	BOOL	Out	Set if definite open position, set by process inputs or substitution, reset if intermediate, disturbed or IV set. Output used for application SW (Interlocking, SWICON and horizontal communication).

Table 12: Signal list for Position Indication 1 (POSIND1) (Continued)

Signal	Type	In/out	Description
CL_DEFI	BOOL	Out	Set if definite close position, set by process inputs or substitution, reset if intermediate, disturbed or IV set. Output used for application SW (Interlocking, SWICON and horizontal communication).
IV_OUT	BOOL	Out	Invalid bit via base software interface for indication. Output used for application SW.
BL_OUT	BOOL	Out	Blocked bit via base software interface for indication. Output used for application SW.
SB_OUT	BOOL	Out	Substituted bit via base software interface for indication. Output used for application SW.
POS_ERR	BOOL	Out	No correct position, set if: • IV=1 • Intermediate position after elapse of T_SPV_POS_FAIL • Disturbed position (open and close =1 signal)
UNCTL_CHANGE_POS	BOOL	Out	Indication set if the position is changed without command, pulse output for minimum one cycle.
OP_IND	BOOL	Out	Position indication including disturbed state indication as 1-1.
CL_IND	BOOL	Out	Position indication including disturbed state indication as 1-1.
OPEN_SET	BOOL	Out	Set by application (e.g. substitution). Output used for writing process database inputs in base-SW.
CLOSE_SET	BOOL	Out	Set by application (e.g. substitution) Output used for writing process database inputs in base-SW.
IV_SET_INPUT	BOOL	Out	Invalid bit to base software interface used for writing process database inputs in base-SW.
BL_SET_INPUT	BOOL	Out	Block bit to base software interface used for writing process database inputs in base-SW.
SB_SET_INPUT	BOOL	Out	Substitution bit to base software interface to enable overwriting of signal value and quality attributes.

Table 13: Signal list for Position Indication 3 (POSIND3)

Signal	Type	In/out	Description
BI_OP_POS_ L1	BOOL	In	Input for switch position; open position for phase L1.
BI_CL_POS_ L1	BOOL	In	Input for switch position; close position for phase L1.
IV_IN_L1	BOOL	In	Invalid bit from base software interface for phase L1 signal.
BL_IN_L1	BOOL	In	Blocked bit from base software interface for phase L1 signal.
SB_IN_L1	BOOL	In	Substituted bit from base software interface for phase L1 signal.
BI_OP_POS_ L2	BOOL	In	Input for switch position; open position for phase L2.
BI_CL_POS_ L2	BOOL	In	Input for switch position; close position for phase L2.

Table 13: Signal list for Position Indication 3 (POSIND3) (Continued)

Signal	Type	In/out	Description
IV_IN_L2	BOOL	In	Invalid bit from base software interface for phase L2 signal.
BL_IN_L2	BOOL	In	Blocked bit from base software interface for phase L2 signal.
SB_IN_L2	BOOL	In	Substituted bit from base software interface for phase L2 signal.
BI_OP_POS_ L3	BOOL	In	Input for switch position; open position for phase L3.
BI_CL_POS_ L3	BOOL	In	Input for switch position; close position for phase L3.
IV_IN_L3	BOOL	In	Invalid bit from base software interface for phase L3 signal.
BL_IN_L3	BOOL	In	Blocked bit from base software interface for phase L3 signal.
SB_IN_L3	BOOL	In	Substituted bit from base software interface for phase L3 signal.
IV_SET_BY_ ASW	BOOL	In	Input for setting of invalid information from application SW (e.g. indication of voltage trip).
BLK_UPD	BOOL	In	Pulse input (from COMCON) for setting of blocking information, positions are frozen.
PROC_UPD	BOOL	In	Pulse input (from COMCON) for resetting of blocking information, positions are updated again.
STDY_BLK _UPD	BOOL	In	Steady input (e.g. from a switch) for setting of blocking information, positions are not updated.
SUBS_OP	BOOL	In	Signal for setting to open position, validity checked by COMCON logic.
SUBS_CL	BOOL	In	Signal for setting to closed position, validity checked by COMCON logic.
EXECUTING	BOOL	In	Input from SWICON, set as long as a command for that object is started or runs.
T_SPV_ POS_FAIL	TIME		See setting table.
T_SPV_ POLE_DISC	TIME		See setting table.
OP_DEFI	BOOL	Out	Set if definite open position, set by process inputs or substitution, reset if intermediate, disturbed or IV set. Output used for application SW (Interlocking, SWICON and horizontal communication).
CL_DEFI	BOOL	Out	Set if definite close position, set by process inputs or substitution, reset if intermediate, disturbed or IV set. Output used for application SW (Interlocking, SWICON and horizontal communication).
IV_OUT	BOOL	Out	Invalid bit via base software interface for indication, logical OR related to responding IV_IN_L1...L3. Output used for application SW.
BL_OUT	BOOL	Out	Blocked bit via base software interface for indication, logical OR related to responding BL_IN_L1..L3. Output used for application SW.
SB_OUT	BOOL	Out	Substituted bit via base software interface for indication, logical OR related to responding SB_IN_L1..L3. Output used for application SW.

Table 13: Signal list for Position Indication 3 (POSIND3) (Continued)

Signal	Type	In/out	Description
POS_ERR	BOOL	Out	No correct position, set if: • IV=1 • Intermediate position after elapse of T_SPV_POS_FAIL • Disturbed position (open and close =1 signal)
POLE_DISC	BOOL	Out	Pole discordance, set if not all phases of one direction are same after elapse of T_SPV_POLE_DISC. (i.e. L1 + L2 = open, L3 = closed).
UNCTL_ CHANGE_ POS	BOOL	Out	Indication set if the position is changed without command, pulse output for minimum one cycle.
OP_IND	BOOL	Out	Position indication including disturbed state indication as 1-1.
CL_IND	BOOL	Out	Position indication including disturbed state indication as 1-1.
OPEN_ SET_L1..L3	BOOL	Out	Set by application (e.g. substitution). Output used for writing process database inputs in base-SW.
CLOSE_ SET_L1..L3	BOOL	Out	Set by application (e.g. substitution) Output used for writing process database inputs in base-SW.
IV_SET_ INPUT_L13	BOOL	Out	Invalid bit to base software interface used for writing process database inputs in base-SW.
BL_SET_ INPUT_L13	BOOL	Out	Blocked bit to base software interface used for writing process database inputs in base-SW.
SB_SET_ INPUT_L13	BOOL	Out	Substituted bit to base software interface to enable overwriting of signal value and quality attributes.

5.2.10 SWICON

Table 14: Signal list for Switch Control (SWICON)

Signal	Type	In/out	Description
OP_DEFI	BOOL	In	Real indication of the apparatus is open.
CL_DEFI	BOOL	In	Real indication of the apparatus is closed.
SEL_GRT	BOOL	In	Apparatus is to asked to be controlled (all reservations are made).
FDBK_SEL	BOOL	In	Relay of apparatus energised.
CMD_OP	BOOL	In	Apparatus asks to work in open direction.
CMD_CL	BOOL	In	Apparatus asks to work in close direction.
CMD_EXE	BOOL	In	Apparatus asks to execute the command.
CMD_CAN	BOOL	In	Selection is cancelled.
ITL_OVR	BOOL	In	Proceed without regarding interlocking.
SYN_OVR	BOOL	In	Proceed without regarding sychrocheck.
BLK_OP	BOOL	In	Acting in open direction is blocked.
BLK_CL	BOOL	In	Acting in close direction is blocked.
ITL_OP	BOOL	In	Acting in open direction is interlocked.
ITL_CL	BOOL	In	Acting in close direction is blocked.

Table 14: Signal list for Switch Control (SWICON) (Continued)

Signal	Type	In/out	Description
SYN_FAIL	BOOL	In	Synchro-check fails.
SYN_OK	BOOL	In	Synchro-check ok.
T_SPV_SEL	TIME		See setting table.
T_SPV_ST_CMD	TIME		See setting table.
T_PLS	TIME		See setting table.
T_SPV_POS_FAIL	TIME		See setting table.
T_SYN_CHK	TIME		See setting table.
ALWAYS_ACT_OUT	BOOL	In	See setting table.
SEL_OP	BOOL	Out	Apparatus selected for open (or direction unknown).
SEL_CL	BOOL	Out	Apparatus selected for close (or direction unknown).
EXE_OP	BOOL	Out	Command execution open.
EXE_CL	BOOL	Out	Command execution close.
SEL_RES	BOOL	Out	End of apparatus control.
EXECUTING	BOOL	Out	A command is running.
SEL_ERR	BOOL	Out	End of apparatus control because an error occurred.
CMD_ERR	BOOL	Out	End of apparatus control because new position was not reached or apparatusdoes not start moving.
BLK_AR	BOOL	Out	Blocking of autoreclose in case of open command.
BLK_IND	BOOL	Out	End of apparatus control because of blocking condition, one execution cycle.
ITL_IND	BOOL	Out	End of apparatus control because of interlocking condition, one execution cycle.
SYN_FAIL_IND	BOOL	Out	End of apparatus control because synchrocheck fails, one execution cycle.
ST_SYN	BOOL	Out	Start of synchrocheck.

5.3 Setting tables

Table 15: Setting table for LON Switch Command Response (L_APPRSP)

Parameter	Type/ [unit]	Usable range	Default	Description
T_SUP_CONV_RSP2	REAL [s]	0.0 - 200.0	5.0	Supervision time for time between receiving order and getting acknowledge, common for all 4 functions, UPD, SUB, BLK and ITL.
T_SUP_TERM_RSP2	REAL [s]	0.0 - 200.0	5.0	Supervision time for time between executing order and getting confirmation of executed order, common for all 4 functions, UPD, SUB, BLK and ITL.

Table 16: Setting table for Bay Reserve (BAYRES)

Parameter	Type/ [unit]	Usable range	Default	Description
T_SPV_CAN_RSV	REAL [s]	0.0 - 200.0	30.0	For cancelling a reservation if the communication fails at incoming requests and the communication is not back within the supervision time.

Table 17: Setting table for Command Control (COMCON)

Parameter	Type/ [unit]	Usable range	Default	Description
T_SPV_LONG_OPR	REAL [s]	0.0 - 200.0	30.0	Maximum time between a select and the execute command coming from the operator. Also the maximum time between the request to override and the following select.
T_SPV_RSV	REAL [s]	0.0 - 200.0	30.0	Allowed time to make the reservation, that is, the time from selection request (REQ_SEL) to the response of granted reservation (SEL_GRT).

Table 18: Setting table for Position Indication (POSIND)

Parameter	Type/ [unit]	Usable range	Default	Description
T_SPV_POS_FAIL	REAL [s]	0.0 - 200.0	10.0	Allowed time for middle position.
T_SPV_POLE_DISC	REAL [s]	0.0 - 200.0	1.0	Time parameter for pole discordance. Allowed time to have discrepancy between the poles. Used only in POSIND3

Table 19: Setting table for Switch Control (SWICON)

Parameter	Type/ [unit]	Usable range	Default	Description
T_SPV_SEL	REAL [s}	0.0 - 200.0	3.0	Allowed time from selection to feedback select.
T_SPV_ST_CMD	REAL [s]	0.0 - 200.0	1.0	Allowed time from execute to position indication change.
T_PLS	REAL [s]	0.0 - 200.0	2.0	Time parameter for command output pulse length.
T_SPV_POS_FAIL	REAL [s]	0.0 - 200.0	10.0	Allowed time for middle position
T_SYN_CHK	REAL [s]	0.0 - 200.0	15.0	Parameter defining supervision time for the synchro-check. The timer starts when the ST_SYN output is set. The timer is stopped when SYN_OK or SYN_FAIL is set or the position indication is changed.
ALWAYS_ACT_OUT	BOOL		False	Is set to true if the command shall act in an already reached position.

1 Application

The interlocking of switchgear operation can have two main purposes:

- To avoid dangerous or damaging operation of switchgear
- To put restrictions on the operation of the substation for other reasons e.g. load configuration. Examples of the latter are to limit the number of parallel transformers to a maximum of two or to assure that energising is always made from one side, for example, the high voltage side of a transformer.

This document only deals with the first point, and only with restrictions caused by switching devices other than that one to be controlled. This means that switch interlock, because of device alarms, is not part of this document.

Disconnectors and earthing switches have a limited switching capacity. Disconnectors are allowed to operate:

- With basically zero current. The circuit is open at one side and has a small extension. The capacitive current is small (for example < 5A) and power transformers with inrush current are not allowed.
- To connect or disconnect a parallel circuit carrying load current. The switching voltage across the open contacts is thus virtually zero, thanks to the parallel circuit (for example < 1% of rated voltage). Paralleling of power transformers is not allowed.

Earthing switches are allowed to connect and disconnect earthing of isolated points. Due to capacitive or inductive coupling there may be some voltage (for example < 40% of rated voltage) before earthing and some current (for example < 100A) after earthing of a line.

Circuit breakers are usually not interlocked. Closing is only interlocked against running disconnectors in the same bay, and the bus-coupler opening is interlocked during a busbar transfer.

As conditions for operational interlocking, the positions of all switching devices of a bay and from some other bays are used. Conditions from other stations are usually not available. So a line earthing switch is usually not fully interlocked. The operator must be convinced that the line is not energised from the other side before closing the earthing switch. As an option, a voltage indication can be used for interlocking. Take care to avoid a dangerous *enable* condition at loss of VT secondary voltage, for example, because of a blown fuse.

The switch positions used in the operational interlocking logic are obtained from auxiliary contacts or position sensors. For each end position (open or close) a true indication is needed - thus forming a double indication. The apparatus control function continuously checks its consistency. If neither condition is high (1 or TRUE), the switch may be in intermediate position, for example, moving. This moving state may be in progress a certain time, for example, 10 seconds for disconnectors. Should both indications stay low for a longer time, the position is interpreted as

unknown. If both indications stay high, then there is something wrong, and the state is again treated as *unknown*. In both cases an alarm is given to the operator. Indication from position sensors shall be self-checked and system faults indicated by a fault signal. In the interlocking logic, the signals are used to avoid dangerous *enable* or *release* of operation conditions. Unknown positions are not allowed to release operation.

For switches with individual operation gear per phase, the evaluation must consider possible phase discrepancies. This is done by *ANDing* all three phases of open and close state. This leads to an unknown state double indication in case of phase discrepancies.

2 Theory of operation

The interlocking function consists of software modules located in each control terminal. The function is distributed and not dependent on any central function. Communication between modules in different bays is performed via the station bus.

The basic method is the use of the reservation function (see the section of apparatus control). This method ensures that the position of the HV apparatuses are not changed during the time gap, which arises between the position updatings. This can occur by reserving all of those HV apparatuses by means of the communication system, which might influence the interlocking condition of the intended operation. The reservation is intended to remain until the operation is performed.

After the selection and reservation of an apparatus, the function has full information on all positions of the apparatuses in the switchyard that are affected by the selection. This status cannot be affected by other operators because the selection is blocked for all apparatuses of which the status is important for the selected one.

The positions of the HV apparatuses are inputs to software modules distributed in the control terminals. Each module contains the interlocking logic for a bay. The interlocking logic in a module is different, depending on the bay function and the switchyard arrangements, that is, double-breaker or 1 1/2 breaker bays have different modules. Specific interlocking conditions and connections between standard interlocking modules are performed by an engineering tool. The signals involved in the bay-level interlocking can consist of these types:

- Positions of HV apparatuses (sometimes per phase)
- Valid positions (if evaluated in the control module)
- External release (to add special conditions for release)
- Line voltage (to block operation of line earthing switch)
- Output signals to release the HV apparatus

The interlocking module is connected to the surrounding functions within a bay as shown in Figure 1:.

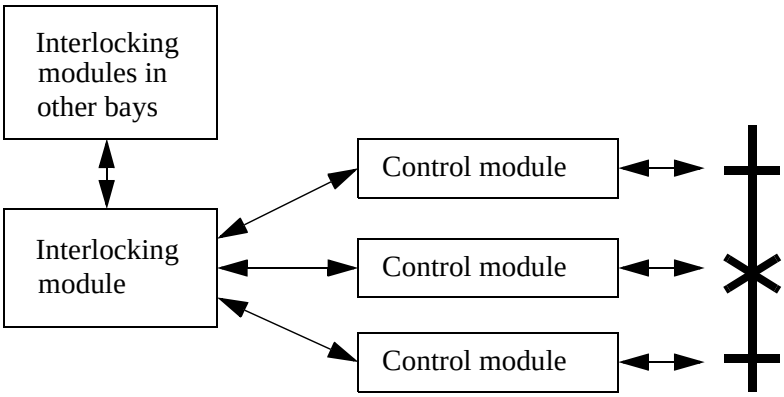

Figure 1: Interlocking module on bay level

The communication between different bays is performed via the station bus and can consist of signals of these types:

- Unearthed busbars
- The busbars are connected together
- Other bays connected to a busbar
- Received data from other bays are valid

Figure 2: shows the principle of data exchange.

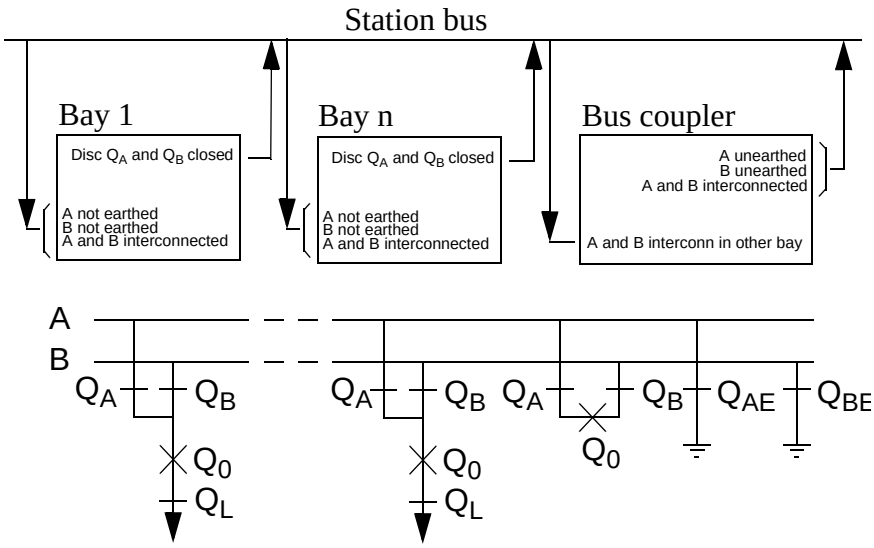

Figure 2: Data exchange between interlocking modules

The interlocking function in a bay that uses invalid data as conditions does not give a release for command. Invalid data of positions of HV apparatuses can be obtained, for example, at intermediate positions, loss of a control terminal, or at input board error.

On the station HMI an override function exists, which can be used to bypass the interlocking function if not all available data for the condition are valid.

For all included interlocking modules these general rules apply:

- The interlocking conditions for opening or closing of disconnectors and earthing switches are always identical.
- Earthing switches at line feeder end, e. g. rapid earthing switches, are normally interlocked only with reference to the conditions in the bay where they are located, not with reference to switches on the other side of the line. So a line voltage indication may be included into line interlocking modules. If there is no line voltage supervision within the bay, then the appropriate inputs must be set to *no voltage*, and the operator must consider this when operating.
- Earthing switches can only be operated at isolated sections e.g. without load/voltage. Circuit breaker contacts cannot be used for isolating of a section, i.e. the status of the circuit breaker is irrelevant for earthing switch operation.
- Disconnectors cannot break power current or connect different voltage systems. Disconnectors in series with a circuit breaker can only be operated if the circuit breaker is open, or if the disconnectors operate in parallel to other closed connection. Other disconnectors can be operated if one side is completely isolated, or if the disconnectors operate in parallel to other closed connection, or if they are earthed on both sides.
- Circuit breaker closing is only interlocked against running disconnectors in its bay or additionally in a transformer bay against the disconnectors and earthing switch on the other side of the transformer, if there is no disconnector between CB and transformer.
- Circuit breaker opening is only interlocked at a bus-coupler bay, if a busbar transfer is in progress.

3 Design

3.1 General

The implementation of the interlocking is distributed to each bay. There are different interlocking modules dependent on the topology kind of the substation (breaker and a half or various bus bar arrangements) and the bay types. The interlocking logic for each module is specified in boolean algebra for the switch states. To keep their amount easy to handle, only operating sequences in normal service are permitted. For other uncommon operations, the command handling has an interlock override feature.

3.2 Standard modules

To make the implementation of the interlocking function easy, several standard modules are available. The modules also have inputs that can be used for delivery-specific interlocking conditions. The switchyard arrangements are described below, to which the standard modules can be used. The appendix describes input and output details.

In REC 580, these standard modules are available:

- ABC_LINE
- ABC_BC
- AB_TRAFO
- A1A2_BS
- A1A2_DC
- BB_ES
- DB_BUS_A, DB_LINE, DB_BUS_B
- BH_LINE_A, BH_CONN, BH_LINE_B

3.2.1 Line for double and transfer busbars, ABC_LINE

ABC_LINE contains the interlocking for a line connected to a double busbar configuration and a transfer busbar. This module is also used for single busbar configurations and with no transfer busbar.

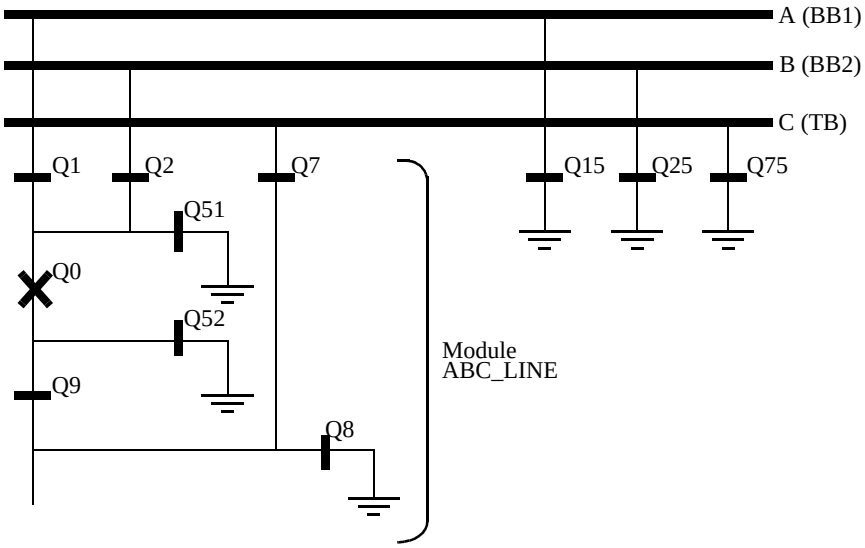

Figure 3: Switchyard layout ABC_LINE

3.2.2 Bus coupler for double and transfer busbars, ABC_BC

ABC_BC contains the interlocking for a bus-coupler bay that is connected to a double busbar configuration and a transfer busbar. This module is also used for single busbar with transfer busbar or double busbar without transfer busbar.

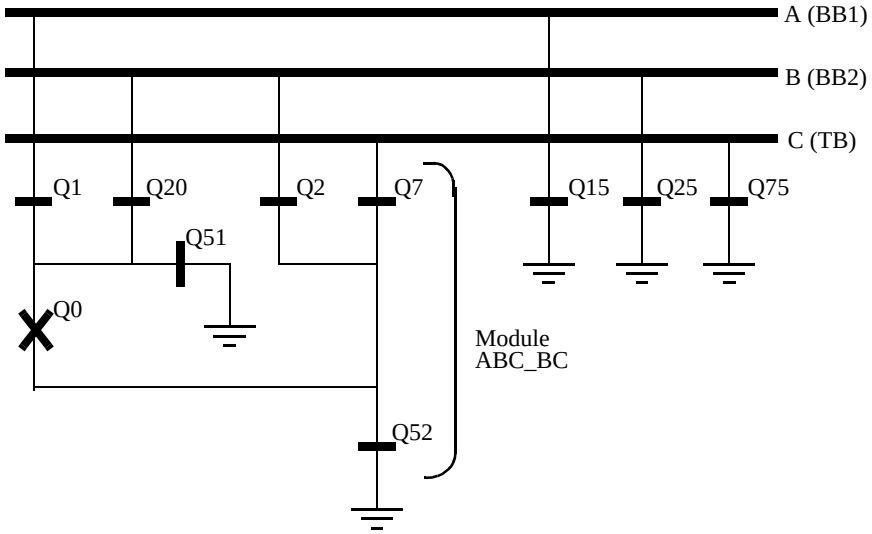

Figure 4: Switchyard layout ABC_BC

3.2.3 Transformer bay for double busbars, AB_TRAFO

AB_TRAFO contains the interlocking for a transformer bay that is connected to a double busbar configuration.This module is used if there is no disconnector between circuit breaker and transformer. Otherwise, the module ABC_LINE can be used. For safety reasons, the module assumes that the other side of the transformer is not interlocked. This module is also used for single busbar configuration.

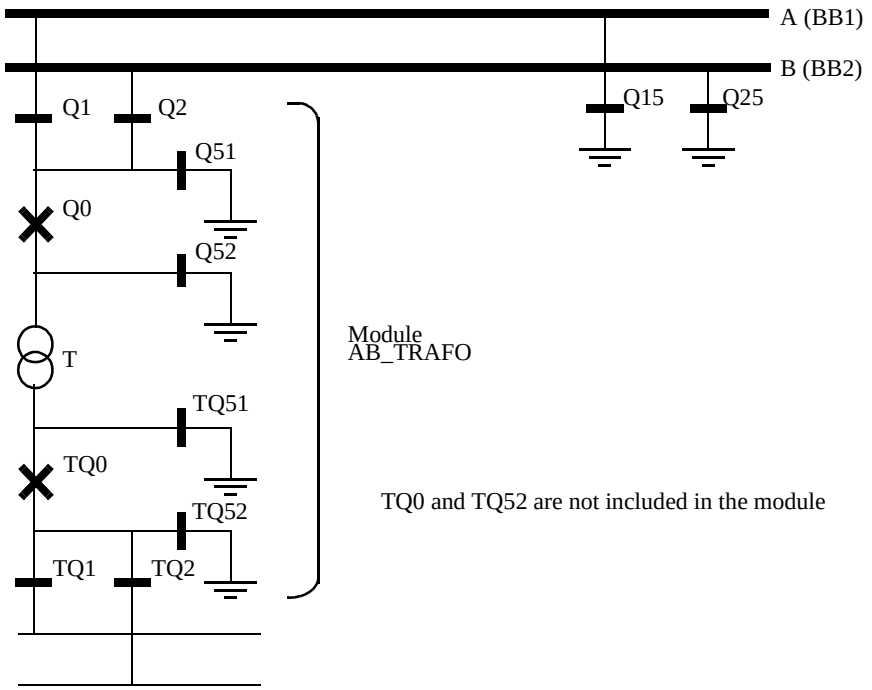

Figure 5: Switchyard layout AB_TRAFO

3.2.4 Bus-section breaker for double busbars, A1A2_BS

A1A2_BS contains the interlocking for one bus-section circuit breaker between section A1 and A2. This module is used for different busbars, which includes a bus-section circuit breaker, that is, not only busbar A.

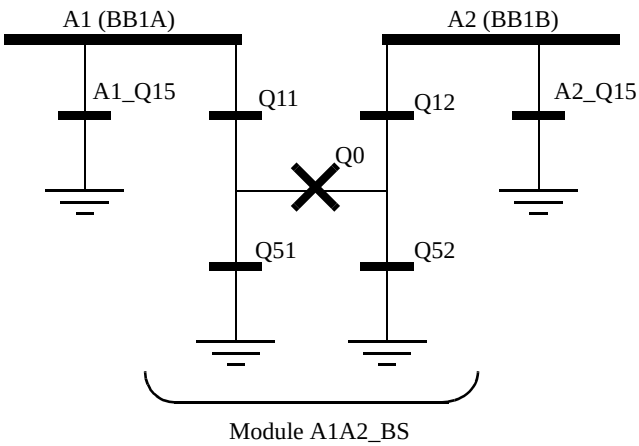

Figure 6: Switchyard layout A1A2_BS

3.2.5 Bus-section disconnector for double busbars, A1A2_DC

A1A2_DC contains the interlocking for one bus-section disconnector between section A1 and A2. This module is used for different busbars which includes a bus-section disconnector, that is, not only busbar A.

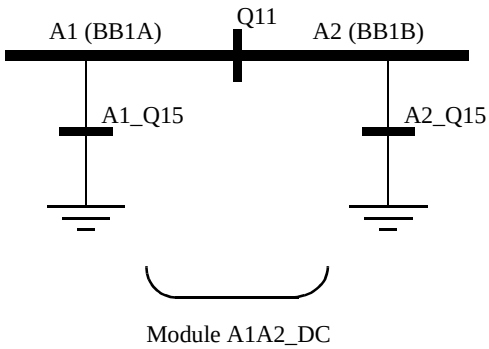

Figure 7: Switchyard layout A1A2_DC

3.2.6 Busbar earthing switch, BB_ES

BB_ES contains the interlocking for one busbar earthing switch on any busbar parts.

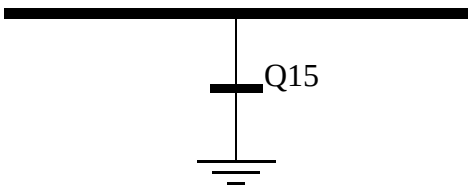

Figure 8: Switchyard layout BB_ES

3.2.7 Double CB bay, DB_BUS_A, DB_LINE, DB_BUS_B

Two types of interlocking modules per double circuit breaker bay are defined. DB_LINE is the connection from the line to the circuit breaker parts that are connected to the busbar. DB_BUS is the connection from DB_LINE to one busbar and is used for each busbar. The busbar earthing switches must also be interlocked as described in the BB_ES chapter.

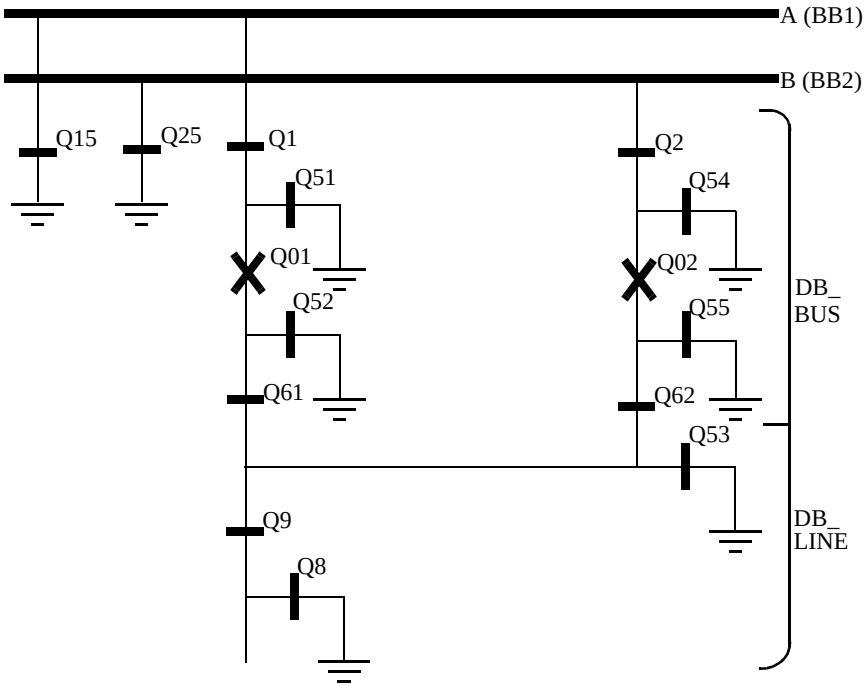

Figure 9: Switchyard layout double circuit breaker

3.2.8 1½-CB diameter, BH_LINE_A, BH_CONN, BH_LINE_B

Two types of interlocking modules per diameter are defined. BH_LINE is the connection from one line to the busbar and is used twice per diameter. BH_CONN is the connection between the two lines of a diameter. The busbar earthing switches must also be interlocked as described in the BB_ES chapter.

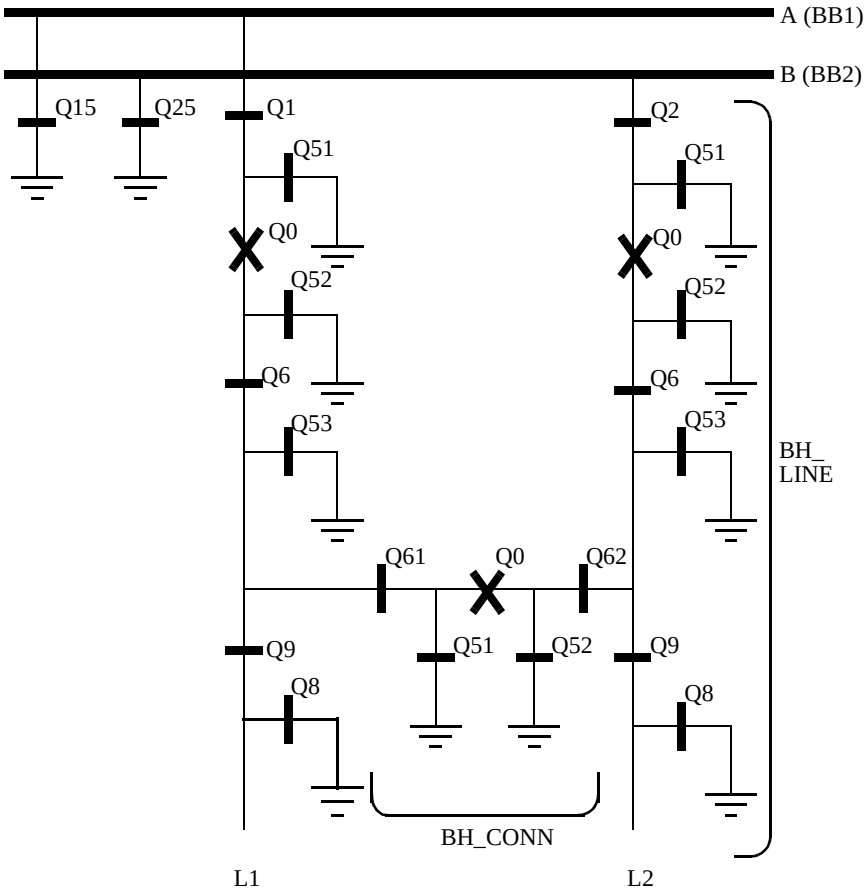

Figure 10: Switchyard layout breaker-and-a-half

3.2.9 Communication between modules

The interlocking module is implemented per bay. The modules needs the status indication of all switching devices in the own bay and some switching devices of other bays. The communication between modules in different bays is performed via the station bus. For the bay-bay communication, there is a need for two communication elements, one for sending and one for receiving. See the documentation for the Send and Receive function block.

The Send/Receive function block supervises the transmission itself. Each communication error results in a deactivation of the data valid signal in the receive function block, which is used as a condition in the interlocking logic.

4 Configurations

4.1 General

This section describes how the interlocking for a certain switchgear configuration can be realised by using standard interlocking modules and their interconnections. It also describes the input settings. The EXVVA_xx input signals, which are normally not used, are always set to 1=TRUE. The inputs for delivery specific conditions (QxEXy) are set to 1=TRUE, if they are not used except:

- Q9EX2 and Q9EX4 in modules BH_LINE_A and BH_LINE_B
- Q0EX3 in module AB_TRAFO

which are set to 0=FALSE.

4.2 Project-specific logic

4.2.1 Single breaker arrangement, line bay

The signals from other bays connected to the module ABC_LINE are described below.

4.2.1.1 Signals from transfer busbar

To derive the signals:

C_DC_OP

All line disconnectors on transfer busbar C except in the own bay are open.

VP_C_DC

The switch status of C_DC is valid.

EXDU_BPB

Signal if no transmission error from any bay connected to a transfer busbar.

These signals from each line bay (ABC_LINE) except that of the own bay are needed:

Q7OPTR

Q7 is open

VPQ7TR

The switch status Q7 is valid.

EXDU_BPB

Signal if there is no transmission error from the bay that contains the above information. This signal is taken from the data valid output on the receive function block.

For bay n, these conditions are valid:

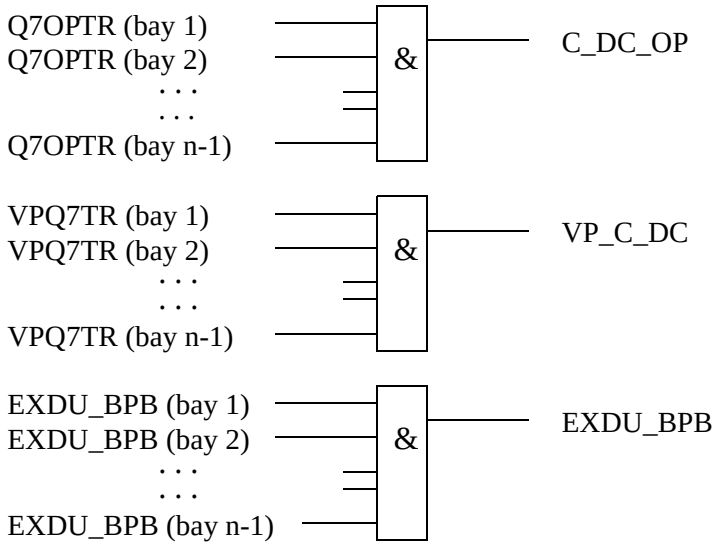

Figure 11: Signals from transfer busbar in line bay n

4.2.1.2 Signals from bus coupler

If the busbar is divided by bus-section disconnectors into bus sections, the busbar-busbar connection could exist via the bus-section disconnector and bus-coupler within the other bus section.

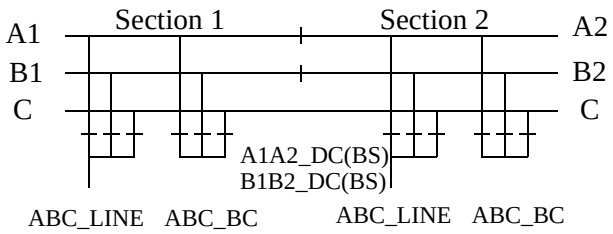

Figure 12: Busbars divided by bus-section disconnectors (circuit breakers)

To derive the signals:

BC_AB_CL

Signal if a bus-coupler connection exists between busbar A and B.

BC_AC_OP

Signal if there is no bus-coupler connection between busbar A and C.

BC_AC_CL

Signal if a bus-coupler connection exists between busbar A and C.

BC_BC_OP

Signal if there is no bus-coupler connection between busbar B and C.

BC_BC_CL

Signal if a bus-coupler connection exists between busbar B and C.

VP_BC_AB

The switch status of BC_AB is valid.

VP_BC_AC

The switch status of BC_AC is valid.

VP_BC_BC

The switch status of BC_BC is valid.

EXDUP_BC

Signal if there is no transmission error from bay BC (bus-coupler bay).

These signals from each bus-coupler bay (ABC_BC) are needed:

BCABCLTR

Signal if a bus-coupler connection through the own bus coupler exists between busbar A and B.

BCACOPTR

Signal if there is no bus-coupler connection through the own bus coupler between busbar A and C.

BCACCLTR

Signal if a bus-coupler connection through the own bus coupler exists between busbar A and C.

BCBCOPTR

Signal if there is no bus-coupler connection through the own bus coupler between busbar B and C.

BCBCCLTR

Signal if a bus-coupler connection through the own bus coupler exists between busbar B and C.

VPBCABTR

The switch status of BC_AB is valid.

VPBCACTR

The switch status of BC_AC is valid.

VPBCBCTR

The switch status of BC_BC is valid.

EXDUP_BC

Signal if there is no transmission error from the bay that contains the above information. This signal is taken from the data valid output on the receive function block.

These signals from each bus-section disconnector bay (A1A2_DC) are also needed. For B1B2_DC, corresponding signals from busbar B are used. The same type of module (A1A2_DC) is used for different busbars, that is, for both bus-section disconnector A1A2_DC and B1B2_DC.

DCOPTR

Signal if the bus-section disconnector is open.

DCCLTR

Signal if the bus-section disconnector is closed.

VPDCTR

The switch status of A1A2_DC is valid.

EXDUP_DC

Signal if there is no transmission error from the bay that contains the above information. This signal is taken from the data valid output on the receive function block.

If the busbar is divided by bus-section circuit breakers, the signals from the bus-section coupler bay (A1A2_BS), rather than the bus-section disconnector bay (A1A2_DC) must be used. For B1B2_BS, corresponding signals from busbar B are used. The same type of module (A1A2_BS) is used for different busbars, that is, for both bus-section circuit breakers A1A2_BS and B1B2_BS.

A1A2OPTR

Signal if there is no bus-section coupler connection between bus sections A1 and A2.

A1A2CLTR

Signal if a bus-section coupler connection exists between bus sections A1 and A2.

VPA1A2TR

The switch status of A1A2_DC is valid.

EXDUP_BS

Signal if there is no transmission error from the bay that contains the above information. This signal is taken from the data valid output on the receive function block.

For a line bay in section 1, these conditions are valid:

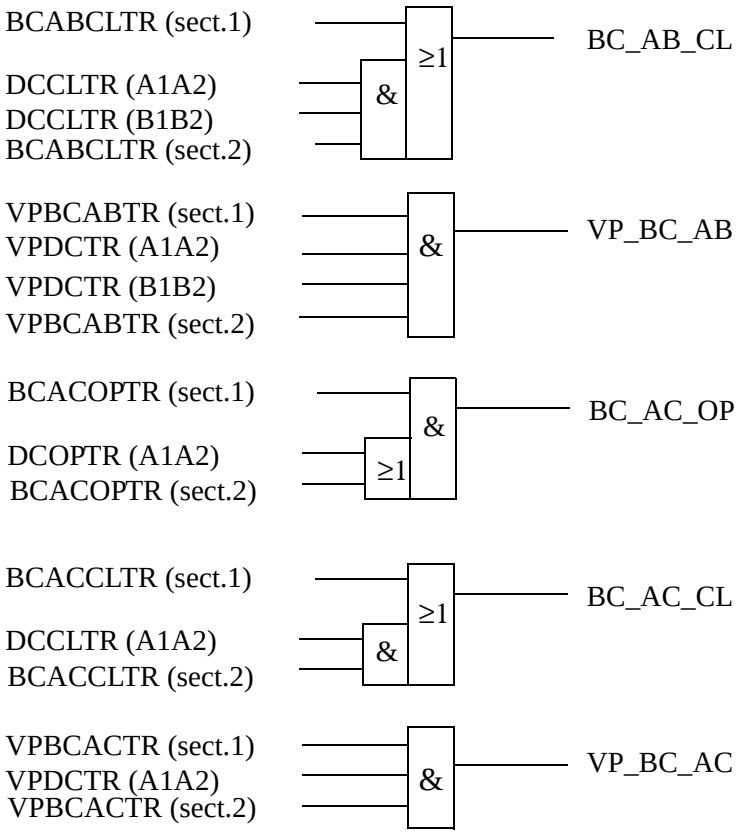

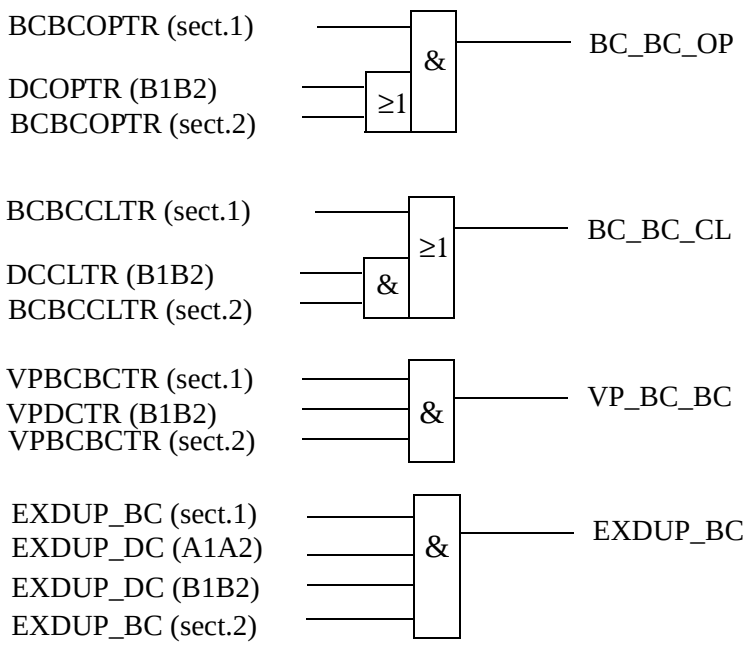

Figure 13: Signals to a line bay in section 1 from the bus-coupler bays in each section

For a line bay in section 2, the same conditions as above are valid by changing section 1 to section 2 and vice versa.

4.2.1.3 Input setting

If there is no transfer busbar and therefore no Q7 disconnector, then the interlocking for Q7 is not used. The states for Q7, Q75, C_DC, BC_AC, BC_BC are set to open by setting the appropriate module inputs as follows. In the functional block diagram, 0 and 1 are designated 0=FALSE and 1=TRUE:

- Q7_OP = 1
- Q7_CL = 0
- Q75_OP = 1
- Q75_CL = 0
- C_DC_OP = 1
- BC_AC_OP = 1
- BC_AC_CL = 0
- BC_BC_OP = 1
- BC_BC_CL = 0
- EXDU_BPB = 1

- VP_C_DC = 1
- VP_BC_AC = 1
- VP_BC_BC = 1

If there is no second busbar B and therefore no Q2 disconnector, then the interlocking for Q2 is not used. The state for Q2, Q25, BC_AB, BC_BC are set to open by setting the appropriate module inputs as follows. In the functional block diagram, 0 and 1 are designated 0=FALSE and 1=TRUE:

- Q2_OP = 1
- Q2_CL = 0

- Q25_OP = 1
- Q25_CL = 0

- BC_AB_CL = 0
- BC_BC_OP = 1
- BC_BC_CL = 0

- VP_BC_AB = 1

4.2.2 Single breaker arrangement, bus-coupler bay

4.2.2.1 Signals from all feeders

The signals from other bays connected to the bus-coupler module ABC_BC are described below.

To derive the signals:

BBTR_OP

Signal if no busbar transfer is in progress concerning this bus coupler.

VP_BBTR

The switch status of BBTR is valid.

EXDUP_AB

Signal if there is no transmission error from any bay connected to the AB busbars.

These signals from each line bay (ABC_LINE), each transformer bay (ABC_TRAFO), and bus-coupler bay (ABC_BC), except the own bus-coupler bay are needed:

Q1Q2OPTR

Signal if Q1 or Q2 or both are open.

VPQ1Q2TR

The switch status of Q1 and Q2 are valid.

EXDUP_AB

Signal if there is no transmission error from the bay that contains the above information. This signal is taken from the data valid output on the receive function block.

For bus-coupler bay n, these conditions are valid:

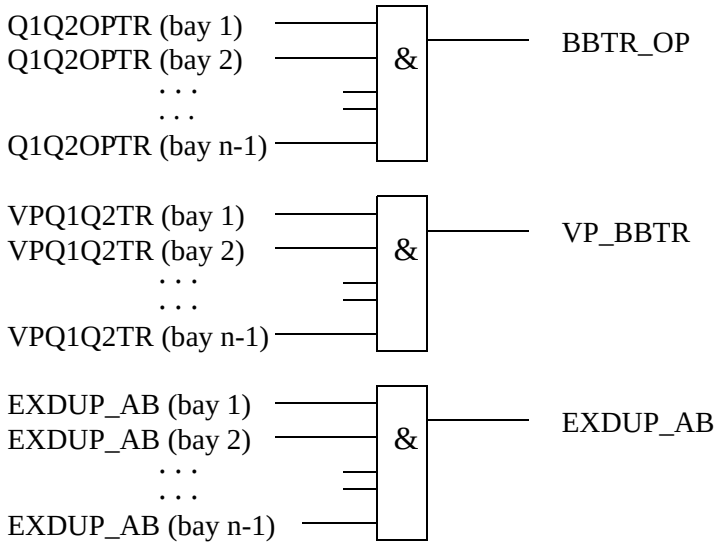

Figure 14: Signals from any bays in bus-coupler bay n

If the busbar is divided by bus-section disconnectors into bus sections, the signals BBTR are connected in parallel - if both bus-section disconnectors are closed. So for the basic project-specific logic for BBTR above, add this logic:

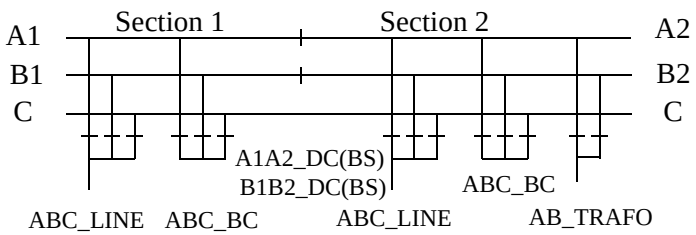

Figure 15: Busbars divided by bus-section disconnectors (circuit breakers)

The following signals from each bus-section disconnector bay (A1A2_DC) are needed. For B1B2_DC, corresponding signals from busbar B are used. The same type of module (A1A2_DC) is used for different busbars, that is, for both bus-section disconnector A1A2_DC and B1B2_DC.

DCOPTR

Signal if the bus-section disconnector is open.

VPDCTR

The switch status of A1A2_DC is valid.

EXDUP_DC

Signal if there is no transmission error from the bay that contains the above information. This signal is taken from the data valid output on the receive function block.

If the busbar is divided by bus-section circuit breakers, the signals from the bus-section coupler bay (A1A2_BS), rather than the bus-section disconnector bay (A1A2_DC), have to be used. For B1B2_BS, corresponding signals from busbar B are used. The same type of module (A1A2_BS) is used for different busbars, that is, for both bus-section circuit breakers A1A2_BS and B1B2_BS.

A1A2OPTR

Signal if there is no bus-section coupler connection between bus sections A1 and A2.

VPA1A2TR

The switch status of A1A2_DC is valid.

EXDUP_BS

Signal if there is no transmission error from the bay that contains the above information. This signal is taken from the data valid output on the receive function block.

For a bus-coupler bay in section 1, these conditions are valid:

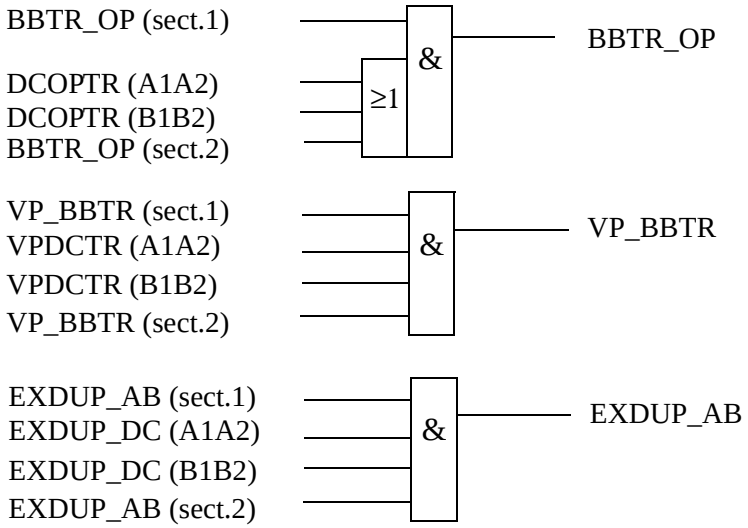

Figure 16: Signals to a bus-coupler bay in section 1 from any bays in each section

For a bus-coupler bay in section 2, the same conditions as above are valid by changing section 1 to section 2 and vice versa.

4.2.2.2 Signals from bus coupler

If the busbar is divided by bus-section disconnectors into bus sections, the signals BC_AB from the busbar coupler of the other busbar section must be transmitted to the own busbar coupler if both disconnectors are closed.

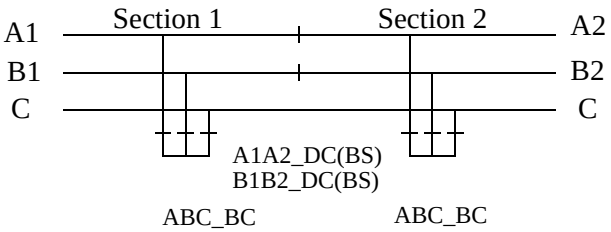

Figure 17: Busbars divided by bus-section disconnectors (circuit breakers)

To derive the signals:

BC_AB_CL

Signal if an other bus-coupler connection exists between busbar A and B.

VP_BC_AB

The switch status of BC_AB is valid.

EXDUP_BC

Signal if there is no transmission error from bay BC (bus-coupler bay).

These signals from each bus-coupler bay (ABC_BC), except the own bay are needed:

BCABCLTR

Signal if a bus-coupler connection through the own bus coupler exists between busbar A and B.

VPBCABTR

The switch status of BC_AB is valid.

EXDUP_BC

Signal if there is no transmission error from the bay that contains the above information. This signal is taken from the data valid output on the receive function block.

These signals from each bus-section disconnector bay (A1A2_DC) are also needed. For B1B2_DC, corresponding signals from busbar B are used. The same type of module (A1A2_DC) is used for different busbars, that is, for both bus-section disconnector A1A2_DC and B1B2_DC.

DCCLTR

Signal if the bus-section disconnector is closed.

VPDCTR

The switch status of A1A2_DC is valid.

EXDUP_DC

Signal if there is no transmission error from the bay that contains the above information. This signal is taken from the data valid output on the receive function block.

If the busbar is divided by bus-section circuit breakers, the signals from the bus-section coupler bay (A1A2_BS), rather than the bus-section disconnector bay (A1A2_DC), must be used. For B1B2_BS, corresponding signals from busbar B are used. The same type of module (A1A2_BS) is used for different busbars, that is, for both bus-section circuit breakers A1A2_BS and B1B2_BS.

A1A2CLTR

Signal if a bus-section coupler connection exists between bus sections A1 and A2.

VPA1A2TR

The switch status of Q0, Q11 and Q12 are valid.

EXDUP_BS

Signal if no transmission error from the bay containing the above information. This signal is taken from the data valid output on the receive function block.

For a bus-coupler bay in section 1, these conditions are valid:

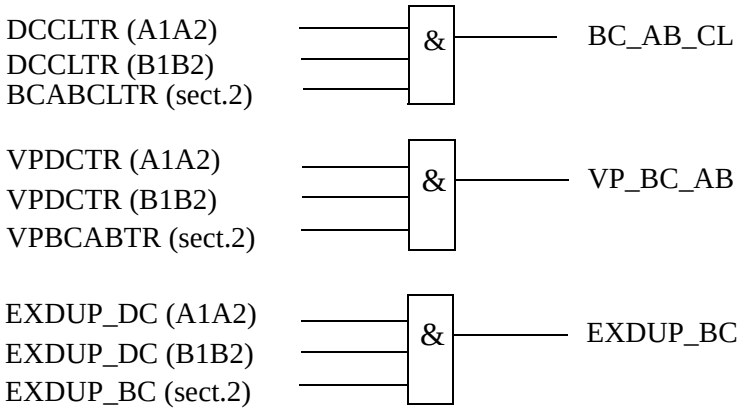

Figure 18: Signals to a bus-coupler bay in section 1 from a bus-coupler bay in an other section

For a bus-coupler bay in section 2, the same conditions as above are valid by changing section 1 to section 2 and vice versa.

4.2.2.3 Input setting

If there is no transfer busbar and therefore no Q20 and Q7 disconnectors, then the interlocking for Q20 and Q7 is not used. The states for Q20, Q7, Q75, BC_AB are set to open by setting the appropriate module inputs as follows. In the functional block diagram, 0 and 1 are designated 0=FALSE and 1=TRUE:

- Q20_OP = 1
- Q20_CL = 0
- Q7_OP = 1
- Q7_CL = 0
- Q75_OP = 1
- Q75_CL = 0
- BC_AB_CL = 0

If there is no second busbar B and therefore no Q20 and Q2 disconnectors, then the interlocking for Q20 and Q2 are not used. The states for Q20, Q2, Q25, BC_AB, BBTR are set to open by setting the appropriate module inputs as follows. In the functional block diagram, 0 and 1 are designated 0=FALSE and 1=TRUE:

- Q20_OP = 1
- Q20_CL = 0
- Q2_OP = 1
- Q2_CL = 0
- Q25_OP = 1
- Q25_CL = 0
- BC_AB_CL = 0
- BBTR_OP = 1

4.2.3 Single breaker arrangement, transformer bay

4.2.3.1 Signals from bus coupler

If the busbar is divided by bus-section disconnectors into bus sections, the busbar-busbar connection could exist via the bus-section disconnector and bus coupler within the other bus section.

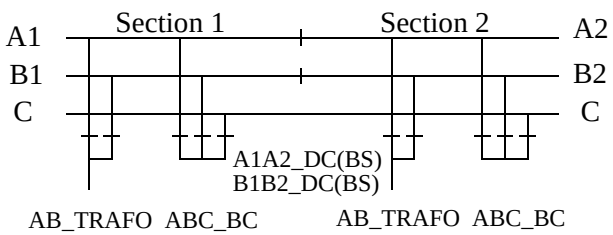

Figure 19: Busbars divided by bus-section disconnectors (circuit breakers)

The project-specific logic for input signals concerning bus coupler are the same as the specific logic for the line bay (ABC_LINE):

BC_AB_CL

Signal if a bus-coupler connection exists between busbar A and B.

VP_BC_AB

The switch status of BC_AB is valid.

EXDUP_BC

Signal if there is no transmission error from bay BC (bus-coupler bay).

See “Signals from bus coupler” on page 89.

4.2.3.2 Input setting

If there is no second busbar B and therefore no Q2 disconnector, then the interlocking for Q2 is not used. The state for Q2, Q25, BC_AB are set to open by setting the appropriate module inputs as follows. In the functional block diagram, 0 and 1 are designated 0=FALSE and 1=TRUE:

- Q2_OP = 1
- Q2_CL = 0

- Q25_OP = 1
- Q25_CL = 0

- BC_AB_CL = 0

If there is no second busbar B at the other side of the transformer and therefore no TQ2 disconnector, then the state for TQ2 is set to open by setting the appropriate module inputs as follows:

- TQ2_OP = 1
- TQ2_CL = 0

4.2.4 Double-breaker arrangement

For a double circuit-breaker bay, the modules DB_BUS_A, DB_LINE and DB_BUS_B must be used.

4.2.4.1 Input setting

For application without Q9 and Q8, just set the appropriate inputs to open state and disregard the outputs. In the functional block diagram, 0 and 1 are designated 0=FALSE and 1=TRUE:

- Q9_OP = 1
- Q9_CL = 0

- Q8_OP = 1
- Q8_CL = 0

If, in this case, a line voltage supervision is added, then rather than setting Q9 to open state, specify the state of the voltage supervision:

- Q9_OP = VOLT_OP
- Q9_CL = VOLT_CL

If there is no voltage supervision, then set the corresponding inputs as follows:

- VOLT_OP = 1
- VOLT_CL = 0

4.2.5 Breaker and a half arrangement

For a breaker-and-a-half arrangement, the modules BH_LINE_A, BH_CONN and BH_LINE_B must be used.

4.2.5.1 Input setting

For application without Q9 and Q8, just set the appropriate inputs to open state and disregard the outputs. In the functional block diagram, 0 and 1 are designated 0=FALSE and 1=TRUE:

- Q9_OP = 1
- Q9_CL = 0

- Q8_OP = 1
- Q8_CL = 0

If, in this case, a line voltage supervision is added, then rather than setting Q9 to open state, specify the state of the voltage supervision:

- Q9_OP = VOLT_OP
- Q9_CL = VOLT_CL

If there is no voltage supervision, then set the corresponding inputs as follows:

- VOLT_OP = 1
- VOLT_CL = 0

4.2.6 Bus-section breaker

4.2.6.1 Signals from all feeders

If the busbar is divided by bus-section circuit breakers into bus sections and both circuit breaker are closed, the opening of the circuit breaker must be blocked if a bus-coupler connection exists between busbar A and B on one bus-section side and if on the other bus-section side a busbar transfer is in progress:

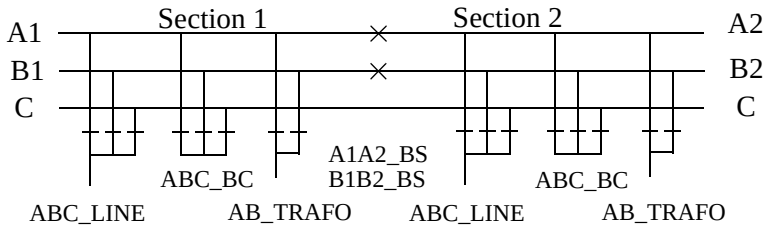

Figure 20: Busbars divided by bus-section circuit breakers

To derive the signals:

BBTR_OP

Signal if no busbar transfer is in progress concerning this bus section.

VP_BBTR

The switch status of BBTR is valid.

EXDUP_AB

Signal if there is no transmission error from any bay connected to the AB busbars.

These signals from each line bay (ABC_LINE), each transformer bay (ABC_TRAFO), and bus-coupler bay (ABC_BC) are needed:

Q1Q2OPTR

Signal if Q1 or Q2 or both are open.

VPQ1Q2TR

The switch status of Q1 and Q2 are valid.

EXDUP_AB

Signal if there is no transmission error from the bay that contains the above information. This signal is taken from the data valid output on the receive function block.

These signals from each bus-coupler bay (ABC_BC) are needed:

BCABOPTR

Signal if there is no bus-coupler connection through the own bus coupler between busbar A and B.

VPBCABTR

The switch status of BC_AB is valid.

EXDUP_BC

Signal if there is no transmission error from the bay that contains the above information. This signal is taken from the data valid output on the receive function block.

These signals from the bus-section circuit breaker bay (A1A2_BS, B1B2_BS) are needed.

A1A2OPTR

Signal if there is no bus-section coupler connection between bus sections A1 and A2.

VPA1A2TR

The switch status of A1A2_BS is valid.

EXDUP_BS

Signal if there is no transmission error from the bay that contains the above information. This signal is taken from the data valid output on the receive function block.

For a bus-section circuit breaker between A1 and A2 section busbars, these conditions are valid:

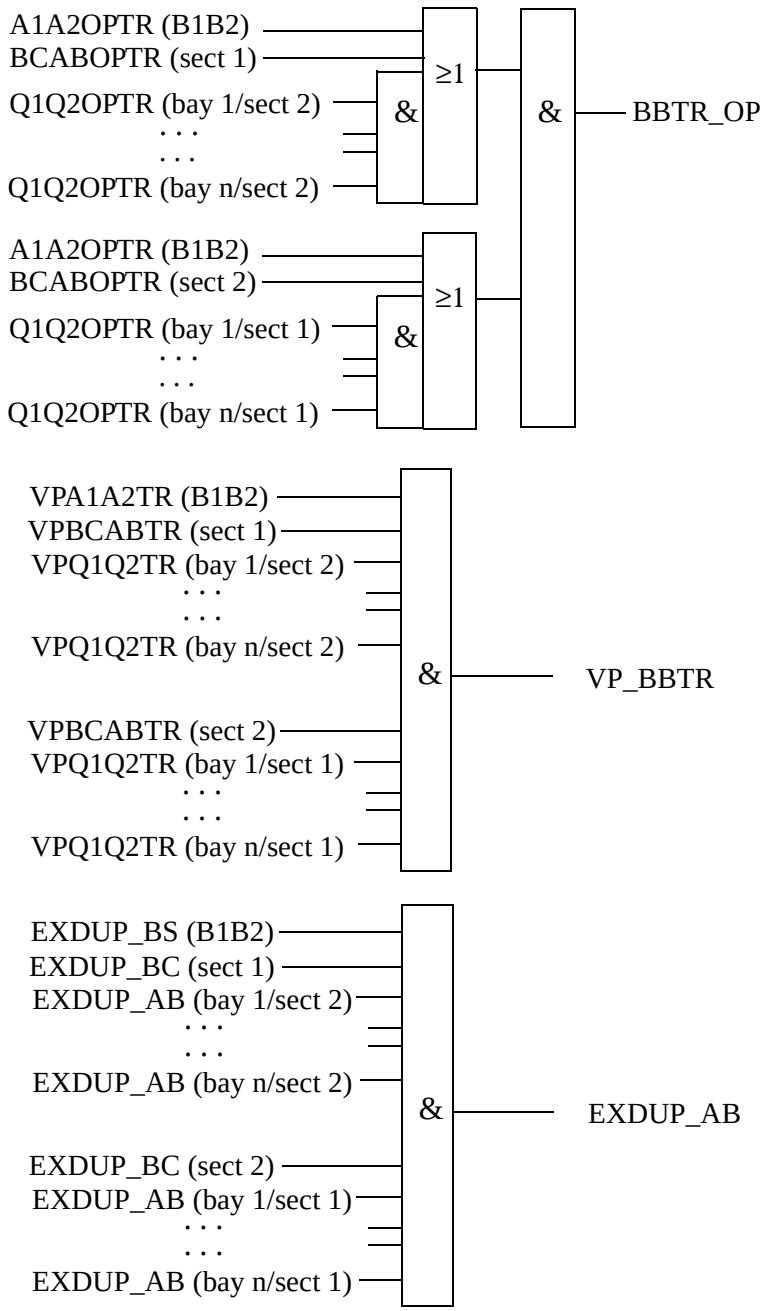

Figure 21: Signals from any bays for a bus-section circuit breaker between sections A1 and A2

For a bus-section circuit breaker between B1 and B2 section busbars, these conditions are valid:

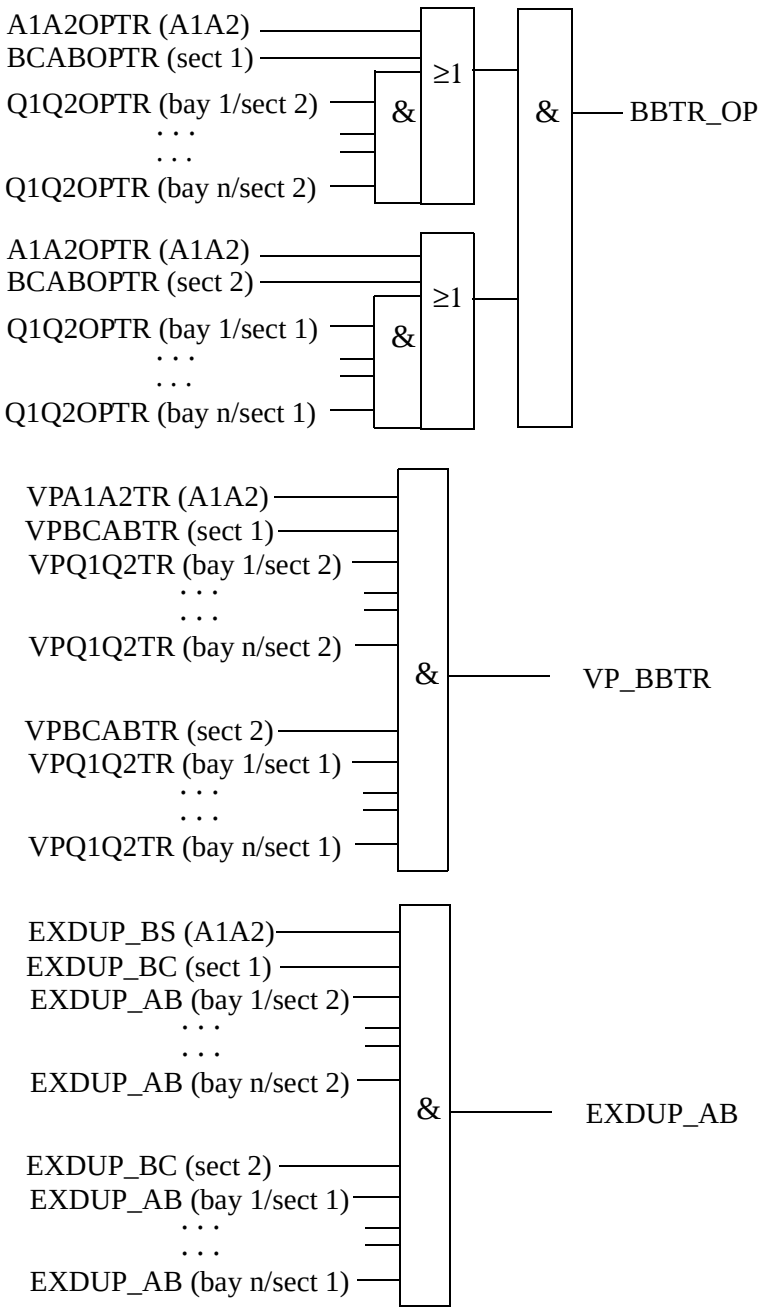

Figure 22: Signals from any bays for a bus-section circuit breaker between sections B1 and B2

4.2.6.2 Input setting

If there is no other busbar via the busbar loops that are possible, then either the interlocking for the Q0 open circuit breaker is not used or the state for BBTR is set to open. That is, no busbar transfer is in progress in this bus section:

- BBTR_OP = 1

4.2.7 Bus-section disconnector

4.2.7.1 Signals in single breaker arrangement

If the busbar is divided by bus-section disconnectors, the signal *no other disconnector connected to the bus section* must be made by a project-specific logic.

The same type of module (A1A2_DC) is used for different busbars, that is, for both bus-section disconnector A1A2_DC and B1B2_DC. But for B1B2_DC, corresponding signals from busbar B are used.

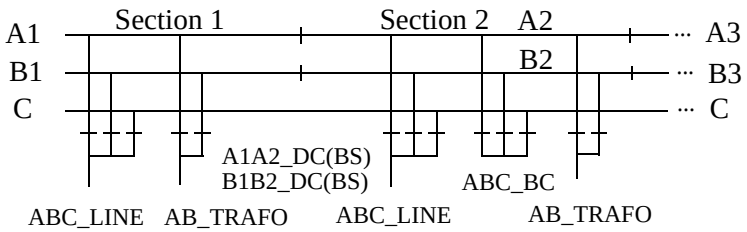

Figure 23: Busbars divided by bus-section disconnectors (circuit breakers)

To derive the signals:

A1DC_OP

Signal if all disconnectors on busbar A1 are open.

A2DC_OP

Signal if all disconnectors on busbar A2 are open.

VPA1_DC

The switch status of A1_DC is valid.

VPA2_DC

The switch status of A2_DC is valid.

EXDUP_BB

Signal if there is no transmission error from any bay that contains the above information.

These signals from each line bay (ABC_LINE), each transformer bay (AB_TRAFO), and each bus-coupler bay (ABC_BC) are needed:

Q1OPTR

Signal if Q1 is open.

Q2OPTR

Signal if Q2 (AB_TRAFO, ABC_LINE) is open.

Q20OPTR

Signal if Q20 (ABC_BC) is open.

VPQ1TR

The switch status of Q1 is valid.

VPQ2TR

The switch status of Q2 is valid.

VPQ20TR

The switch status of Q2 and Q20 are valid.

EXDUP_BB

Signal if there is no transmission error from the bay that contains the above information. This signal is taken from the data valid output on the receive function block.

If there is an additional bus-section disconnector, the signal from the bus-section disconnector bay (A1A2_DC) must be used:

DCOPTR

Signal if the bus-section disconnector is open.

VPDCTR

The switch status of A1A2_DC is valid.

EXDUP_DC

Signal if there is no transmission error from the bay that contains the above information. This signal is taken from the data valid output on the receive function block.

If there is an additional bus-section circuit breaker rather than an additional bus-section disconnector the signals from the bus-section, circuit-breaker bay (A1A2_BS) rather than the bus-section disconnector bay (A1A2_DC) must be used:

Q11OPTR

Signal if Q11 is open.

Q12OPTR

Signal if Q12 is open.

VPQ11TR

The switch status of Q11 is valid.

VPQ12TR

The switch status of Q12 is valid.

EXDUP_BS

Signal if there is no transmission error from the bay BS (bus-section coupler bay) that contains the above information. This signal is taken from the data valid output on the receive function block.

For a bus-section disconnector, these conditions from the A1 busbar section are valid:

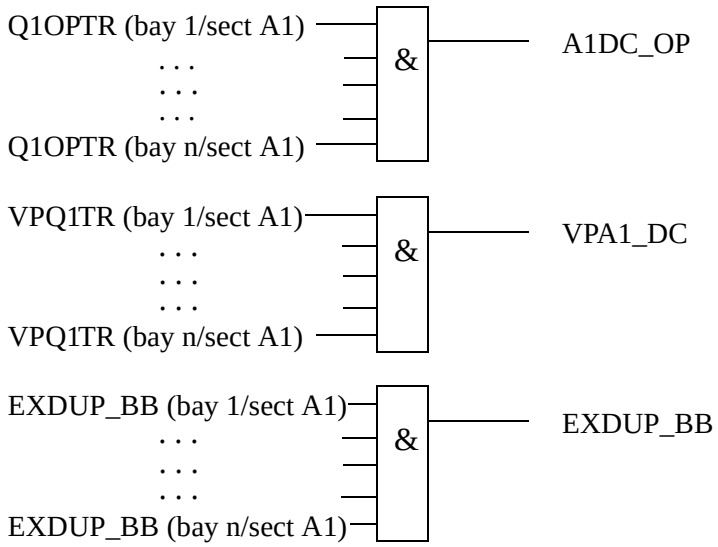

Figure 24: Signals from any bays in section A1 to a bus-section disconnector

For a bus-section disconnector, these conditions from the A2 busbar section are valid:

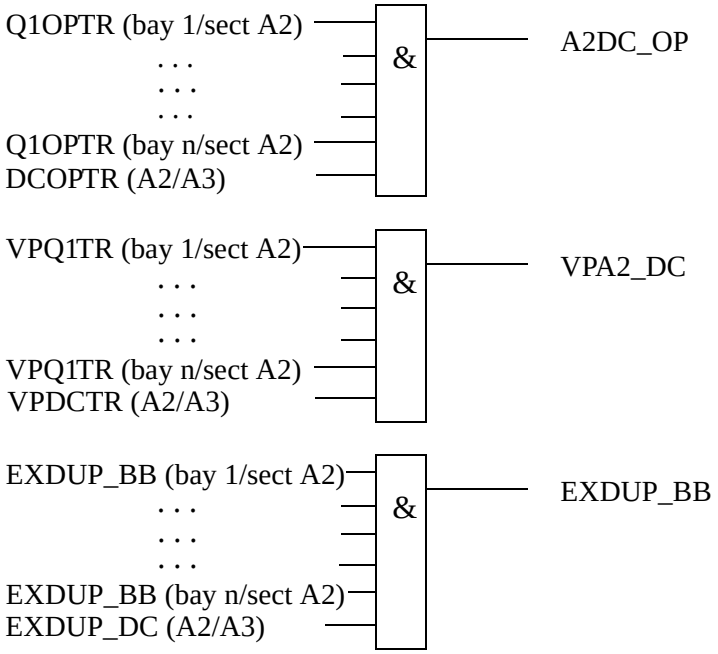

Figure 25: Signals from any bays in section A2 to a bus-section disconnector

For a bus-section disconnector, these conditions from the B1 busbar section are valid:

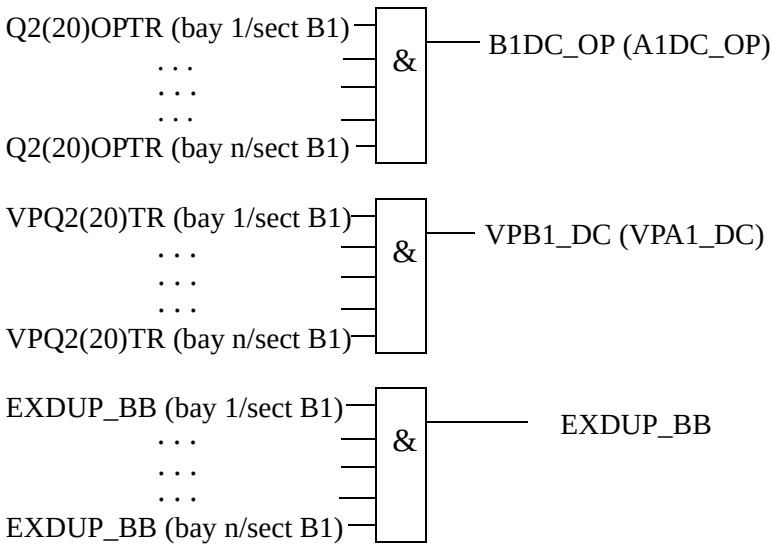

Figure 26: Signals from any bays in section B1 to a bus-section disconnector

For a bus-section disconnector, these conditions from the B2 busbar section are valid:

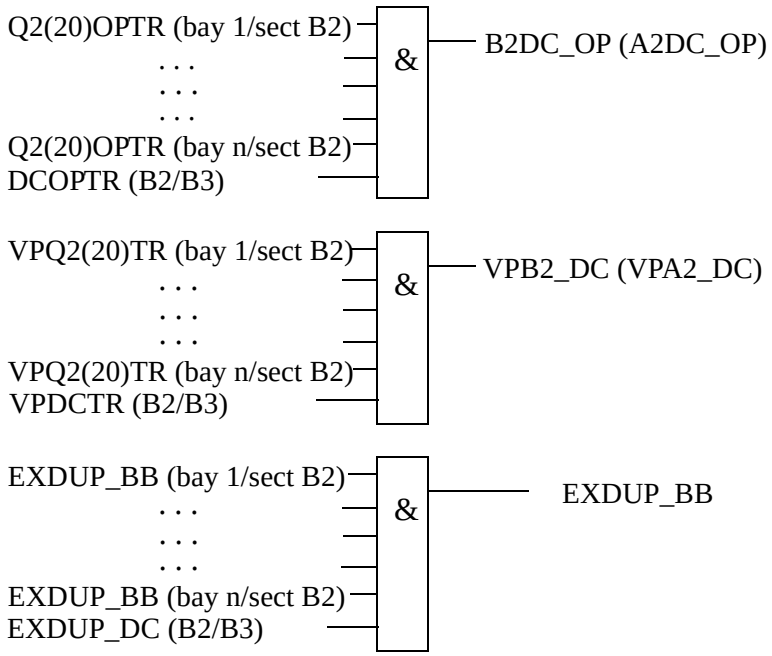

Figure 27: Signals from any bays in section B2 to a bus-section disconnector

4.2.7.2 Signals in double-breaker arrangement

If the busbar is divided by bus-section disconnectors, the signal for the busbar disconnector bay *no other disconnector connected to the bus section* must be made by a project-specific logic.

The same type of module (A1A2_DC) is used for different busbars, that is, for both bus-section disconnector A1A2_DC and B1B2_DC. But for B1B2_DC, corresponding signals from busbar B are used.

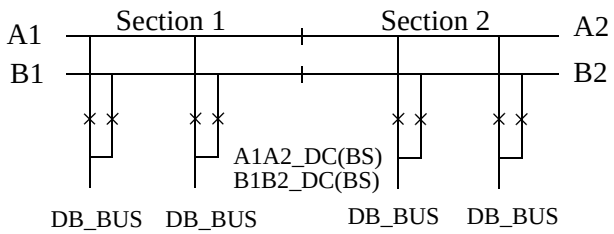

Figure 28: Busbars divided by bus-section disconnectors (circuit breakers)

To derive the signals:

A1DC_OP

Signal if all disconnectors on busbar A1 are open.

A2DC_OP

Signal if all disconnectors on busbar A2 are open.

VPA1_DC

The switch status of A1_DC is valid.

VPA2_DC

The switch status of A2_DC is valid.

EXDUP_BB

Signal if there is no transmission error from bay DB (double-breaker bay) that contains the above information.

These signals from each double-breaker bay (DB_BUS) are needed:

Q1OPTR

Signal if Q1 is open.

Q2OPTR

Signal if Q2 is open.

VPQ1TR

The switch status of Q1 is valid.

VPQ2TR

The switch status of Q2 is valid.

EXDUP_DB

Signal if there is no transmission error from the bay that contains the above information. This signal is taken from the data valid output on the receive function block.

The logic is identical to the double busbar configuration described in “4.2.7.1 Signals in single breaker arrangement”.

For a bus-section disconnector, these conditions from the A1 busbar section are valid:

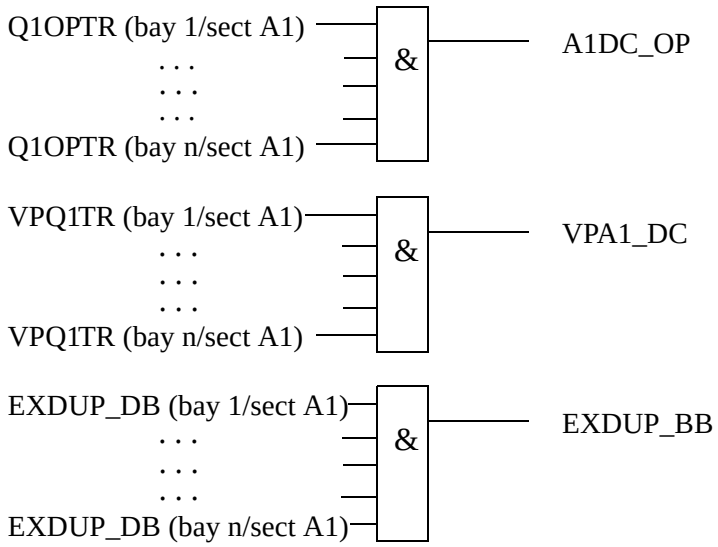

Figure 29: Signals from double-breaker bays in section A1 to a bus-section disconnector

For a bus-section disconnector, these conditions from the A2 busbar section are valid:

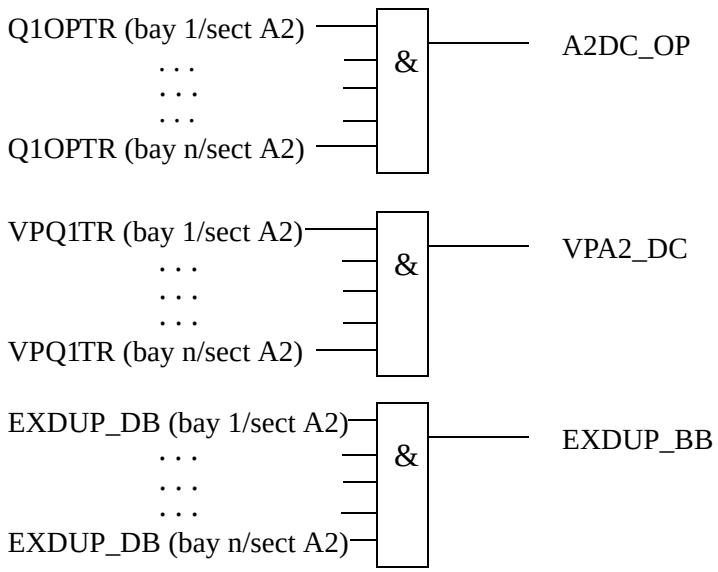

Figure 30: Signals from double-breaker bays in section A2 to a bus-section disconnector

For a bus-section disconnector, these conditions from the B1 busbar section are valid:

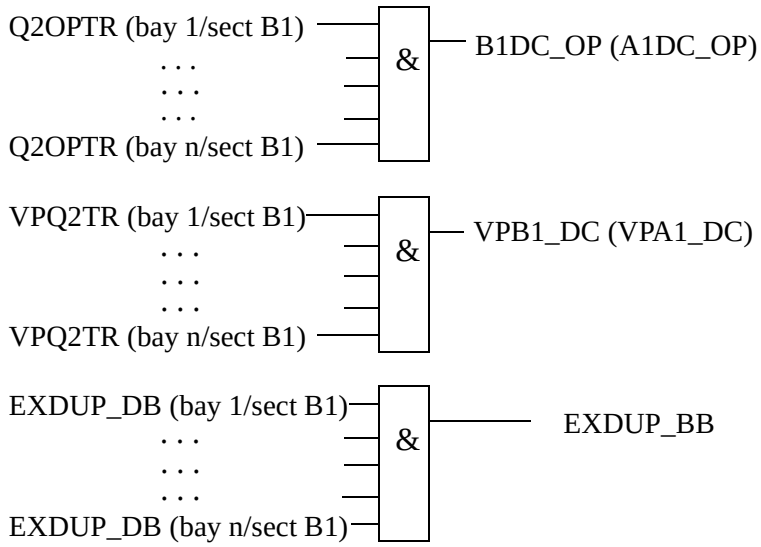

Figure 31: Signals from double-breaker bays in section B1 to a bus-section disconnector

For a bus-section disconnector, these conditions from the B2 busbar section are valid:

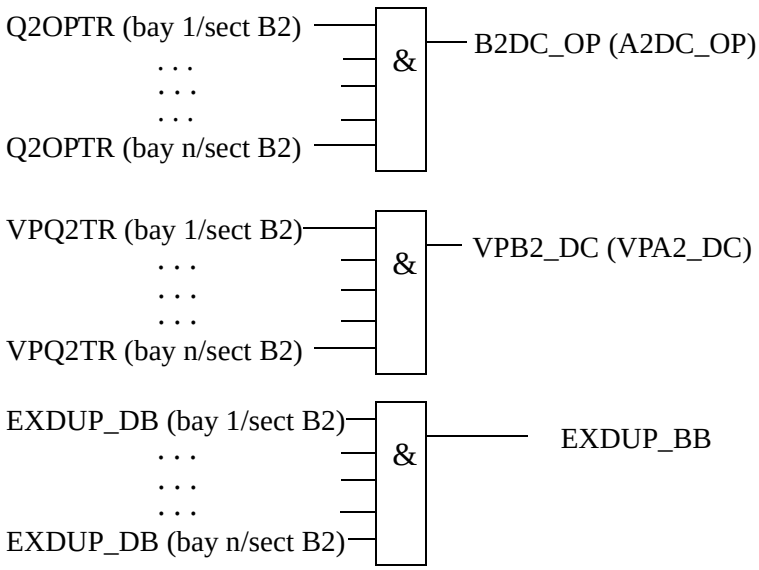

Figure 32: Signals from double-breaker bays in section B2 to a bus-section disconnector

4.2.7.3 Signals in breaker and a half arrangement

If the busbar is divided by bus-section disconnectors, the signal for the busbar disconnector bay *no other disconnector connected to the bus section* must be made by a project-specific logic.

The same type of module (A1A2_DC) is used for different busbars, that is, for both bus-section disconnector A1A2_DC and B1B2_DC. But for B1B2_DC, corresponding signals from busbar B are used.

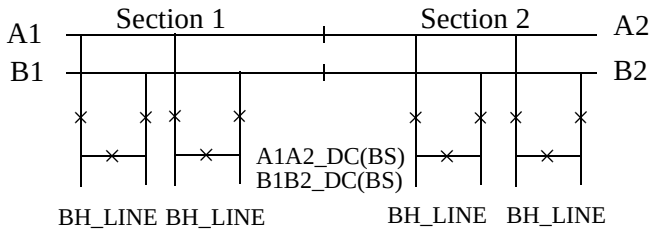

Figure 33: Busbars divided by bus-section disconnectors (circuit breakers)

The project-specific logic are the same as for the logic for the double-breaker configuration. See “Signals in double-breaker arrangement” on page 111.

A1DC_OP

Signal if all disconnectors on busbar A1 are open.

A2DC_OP

Signal if all disconnectors on busbar A2 are open.

VPA1_DC

The switch status of A1_DC is valid.

VPA2_DC

The switch status of A2_DC is valid.

EXDUP_BB

Signal if there is no transmission error from bay BH (breaker and a half) that contains the above information.

4.2.8 Bus earthing switch

4.2.8.1 Signals in single breaker arrangement

The busbar earthing switch is only allowed to operate if all disconnectors of the bus section are open.

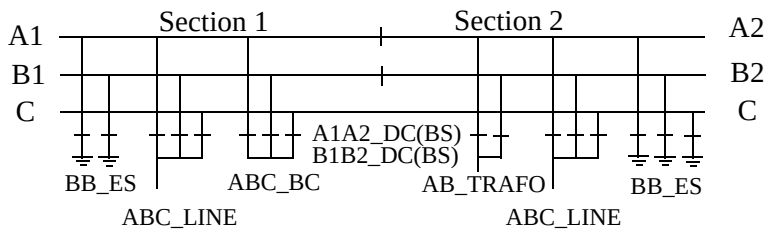

Figure 34: Busbars divided by bus-section disconnectors (circuit breakers)

To derive the signals:

ABCDC_OP

Signal if all disconnectors of this busbar section are open.

VP_ABCDC

The switch status of ABCDC is valid.

EXDUP_BB

Signal if no transmission error from any bay containing the above information.

These signals from each line bay (ABC_LINE), each transformer bay (AB_TRAFO), and each bus-coupler bay (ABC_BC) are needed:

Q1OPTR

Signal if Q1 is open.

Q2OPTR

Signal if Q2 (AB_TRAFO, ABC_LINE) is open.

Q20OPTR

Signal if Q2 and Q20 (ABC_BC) are open.

Q7OPTR

Signal if Q7 is open.

VPQ1TR

The switch status of Q1 is valid.

VPQ2TR

The switch status of Q2 is valid.

VPQ20TR

The switch status of Q2 and Q20 are valid.

VPQ7TR

The switch status of Q7 is valid.

EXDUP_BB

Signal if there is no transmission error from the bay that contains the above information.This signal is taken from the data valid output on the receive function block.

These signals from each bus-section disconnector bay (A1A2_DC) are also needed. For B1B2_DC, corresponding signals from busbar B are used. The same type of module (A1A2_DC) is used for different busbars, that is, for both bus-section disconnectors A1A2_DC and B1B2_DC.

DCOPTR

Signal if the bus-section disconnector is open.

VPDCTR

The switch status of A1A2_DC is valid.

EXDUP_DC

Signal if there is no transmission error from the bay that contains the above information. This signal is taken from the data valid output on the receive function block.

If no bus-section disconnector exists the signal DCOPTR, VPDCTR and EXDUP_DC are set to 1 (TRUE).

If the busbar is divided by bus-section circuit breakers, the signals from the bus-section coupler bay (A1A2_BS) rather than the bus-section disconnector bay (A1A2_DC) must be used. For B1B2_BS, corresponding signals from busbar B are used. The same type of module (A1A2_BS) is used for different busbars, that is, for both bus-section circuit breakers A1A2_BS and B1B2_BS.

Q11OPTR

Signal if Q11 is open.

Q12OPTR

Signal if Q12 is open.

VPQ11TR

The switch status of Q11 is valid.

VPQ12TR

The switch status of Q12 is valid.

EXDUP_BS

Signal if there is no transmission error from the bay (bus-section coupler bay) that contains the above information. This signal is taken from the data valid output on the receive function block.

For a busbar earthing switch, these conditions from the A1 busbar section are valid:

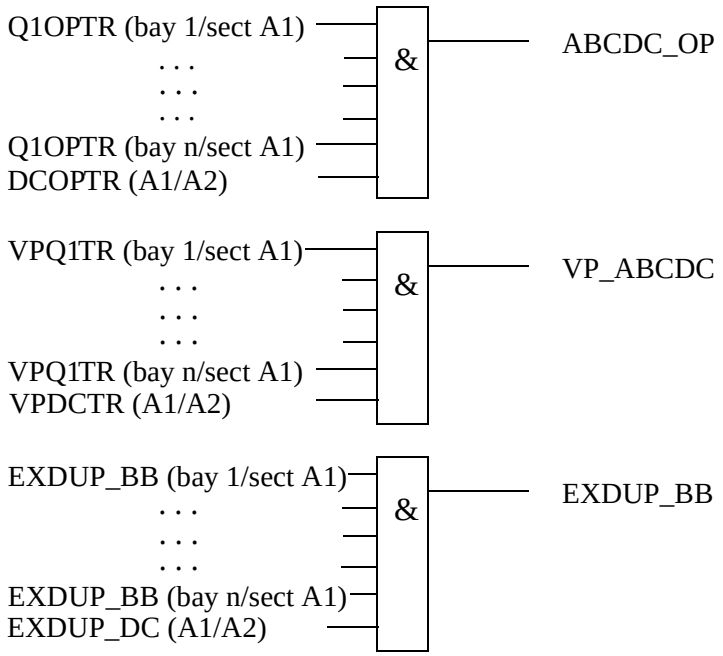

Figure 35: Signals from any bays in section A1 to a busbar earthing switch in the same section

For a busbar earthing switch, these conditions from the A2 busbar section are valid:

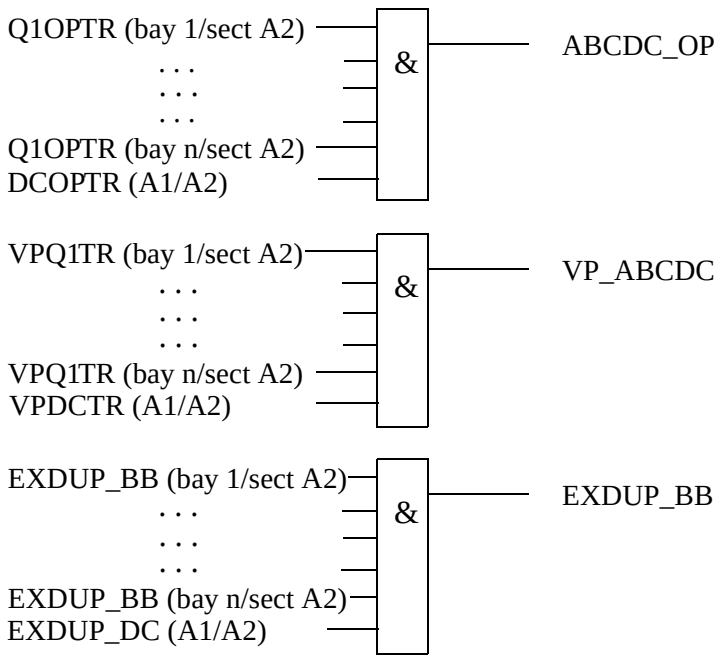

Figure 36: Signals from any bays in section A2 to a busbar earthing switch in the same section

For a busbar earthing switch, these conditions from the B1 busbar section are valid:

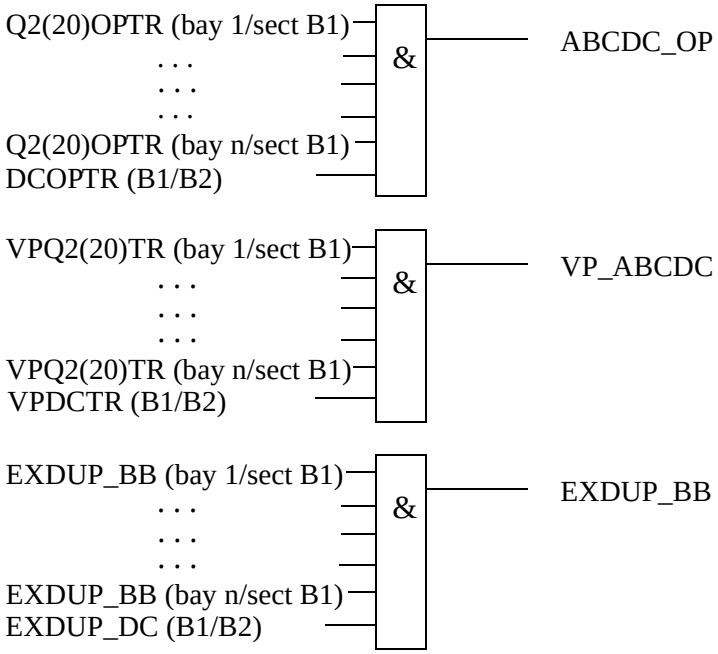

Figure 37: Signals from any bays in section B1 to a busbar earthing switch in the same section

For a busbar earthing switch, these conditions from the B2 busbar section are valid:

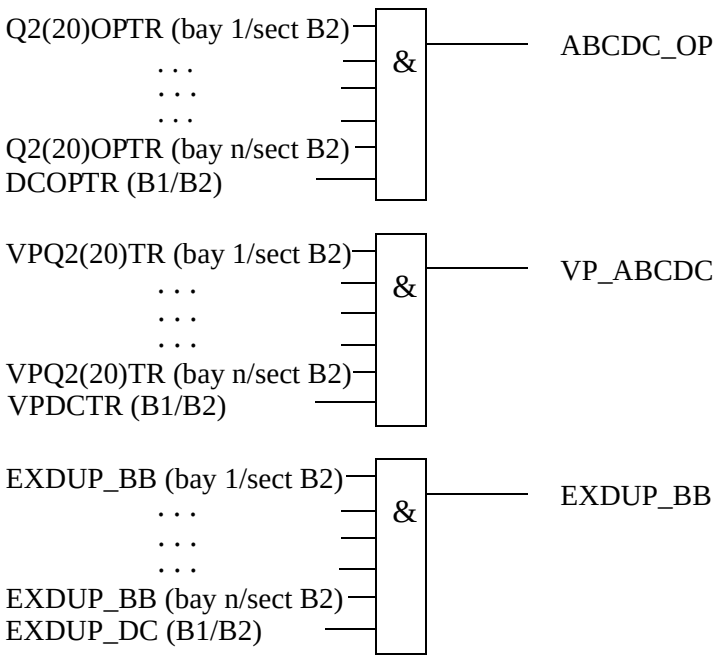

Figure 38: Signals from any bays in section B2 to a busbar earthing switch in the same section

For a busbar earthing switch on transfer busbar C, these conditions are valid:

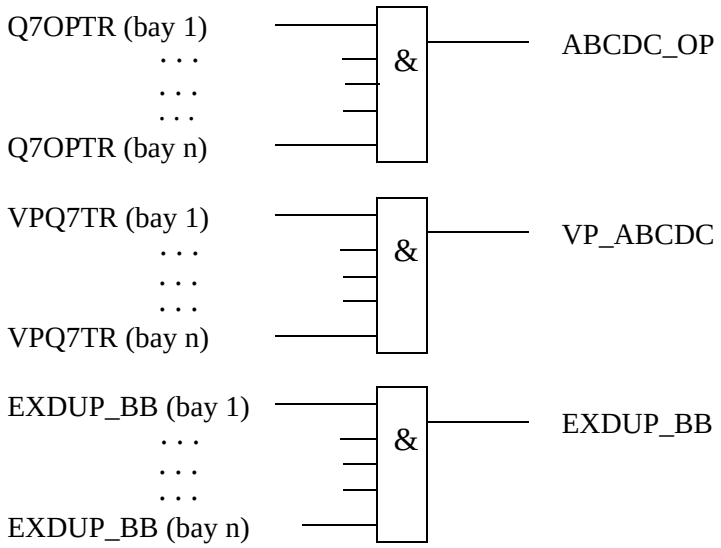

Figure 39: Signals from transfer busbar to busbar earthing switch

4.2.8.2 Signals in double-breaker arrangement

The busbar earthing switch is only allowed to operate if all disconnectors of the bus section are open.

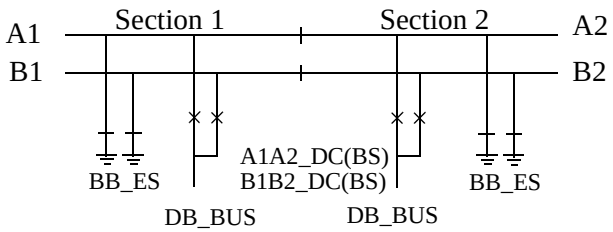

Figure 40: Busbars divided by bus-section disconnectors (circuit breakers)

To derive the signals:

ABCDC_OP

Signal if all disconnectors of this busbar section are open.

VP_ABCDC

The switch status of ABCDC is valid.

EXDUP_BB

Signal if there is no transmission error from any bay that contains the above information.

These signals from each double-breaker bay (DB_BUS) are needed:

Q1OPTR

Signal if Q1 is open.

Q2OPTR

Signal if Q2 is open.

VPQ1TR

The switch status of Q1 is valid.

VPQ2TR

The switch status of Q2 is valid.

EXDUP_DB

Signal if there is no transmission error from the bay that contains the above information. This signal is taken from the data valid output on the receive function block.

These signals from each bus-section disconnector bay (A1A2_DC) are also needed. For B1B2_DC, corresponding signals from busbar B are used. The same type of module (A1A2_DC) is used for different busbars, that is, for both bus-section disconnectors A1A2_DC and B1B2_DC.

DCOPTR

Signal if the bus-section disconnector is open.

VPDCTR

The switch status of A1A2_DC is valid.

EXDUP_DC

Signal if there is no transmission error from the bay that contains the above information. This signal is taken from the data valid output on the receive function block.

The logic is identical to the double busbar configuration described in “4.2.8.1 Signals in single breaker arrangement”.

4.2.8.3 Signals in breaker and a half arrangement

The busbar earthing switch is only allowed to operate if all disconnectors of the bus section are open.

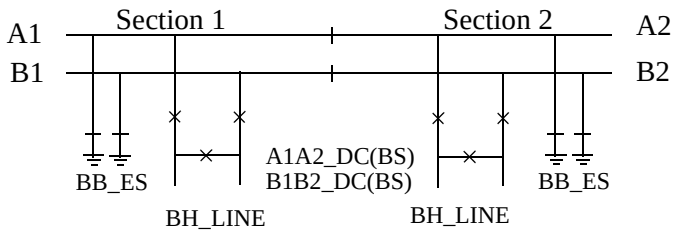

Figure 41: Busbars divided by bus-section disconnectors (circuit breakers)

The project-specific logic are the same as for the logic for the double busbar configuration. See “4.2.8.1 Signals in single breaker arrangement”

ABCDC_OP

Signal if all disconnectors of this busbar section are open.

VP_ABCDC

The switch status of ABCDC is valid.

EXDUP_BB

Signal if there is no transmission error from any bay that contains the above information.

5 Appendix

5.1 Function blocks and function block diagrams

5.1.1 ABC_LINE

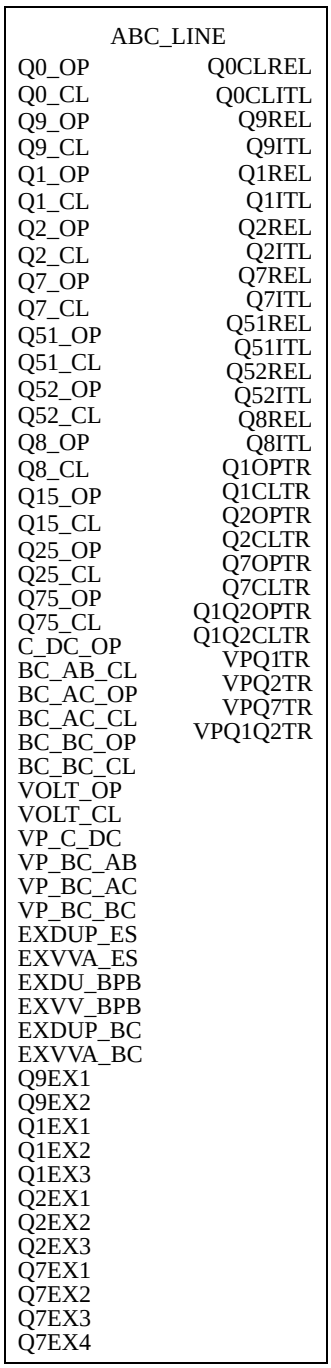

Figure 42: Function block ABC_LINE

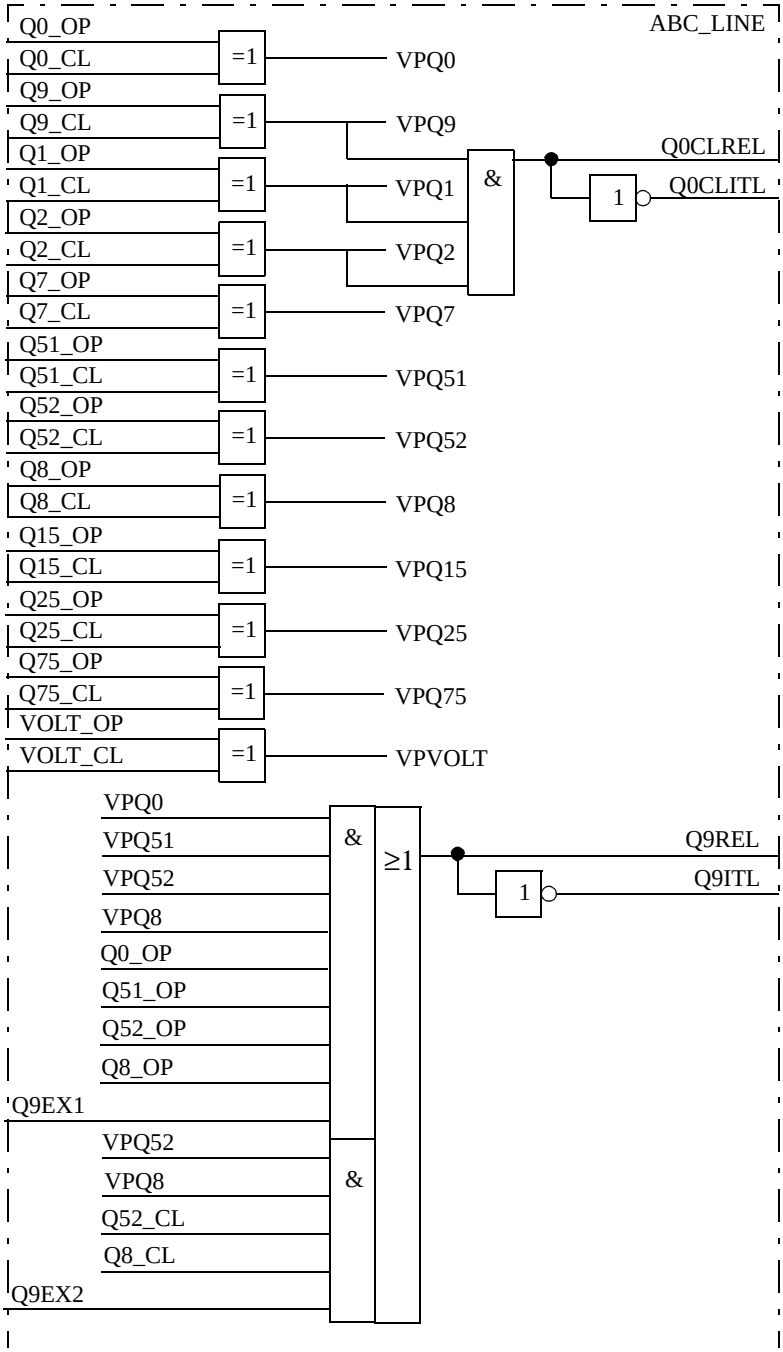
ABC_LINE
Q0_OP
Q0_CL
Q9_OP
Q9_CL
Q1_OP
Q1_CL
Q2_OP
Q2_CL
Q7_OP
Q7_CL
Q51_OP
Q51_CL
Q52_OP
Q52_CL
Q8_OP
Q8_CL
Q15_OP
Q15_CL
Q25_OP
Q25_CL
Q75_OP
Q75_CL
VOLT_OP
VOLT_CL
=1
VPQ0
VPQ9
VPQ1
VPQ2
VPQ7
VPQ51
VPQ52
VPQ8
VPQ15
VPQ25
VPQ75
VPVOLT
&
1
Q0CLREL
Q0CLITL
VPQ0
VPQ51
VPQ52
VPQ8
Q0_OP
Q51_OP
Q52_OP
Q8_OP
Q9EX1
VPQ52
VPQ8
Q52_CL
Q8_CL
Q9EX2
&
&
≥1
1
Q9REL
Q9ITL

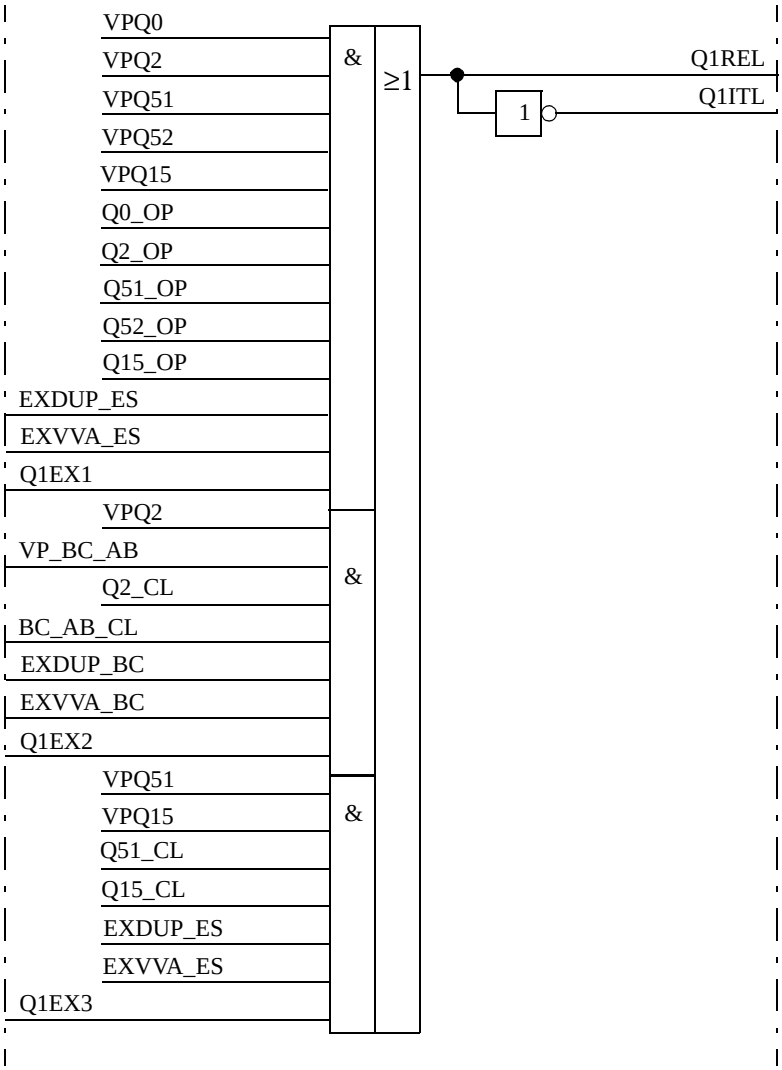
VPQ0
VPQ2
VPQ51
VPQ52
VPQ15
Q0_OP
Q2_OP
Q51_OP
Q52_OP
Q15_OP
EXDUP_ES
EXVVA_ES
Q1EX1
VPQ2
VP_BC_AB
Q2_CL
BC_AB_CL
EXDUP_BC
EXVVA_BC
Q1EX2
VPQ51
VPQ15
Q51_CL
Q15_CL
EXDUP_ES
EXVVA_ES
Q1EX3
&
&
&
≥1
1
Q1REL
Q1ITL

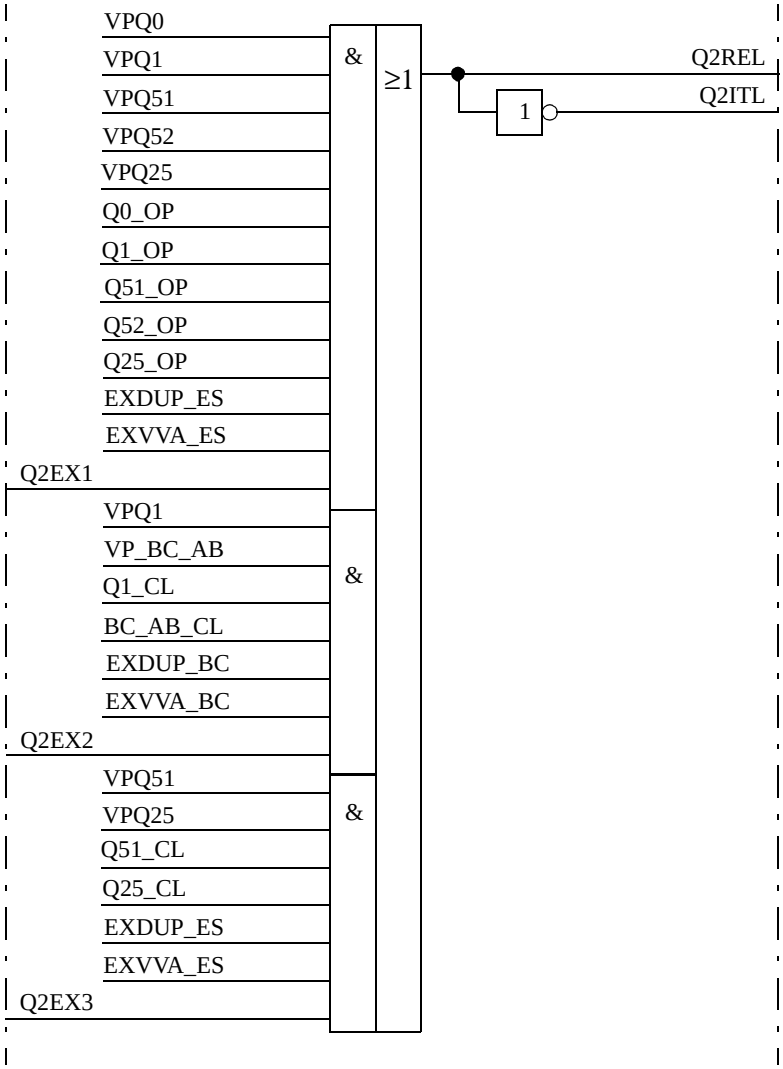
VPQ0
VPQ1
VPQ51
VPQ52
VPQ25
Q0_OP
Q1_OP
Q51_OP
Q52_OP
Q25_OP
EXDUP_ES
EXVVA_ES
Q2EX1
VPQ1
VP_BC_AB
Q1_CL
BC_AB_CL
EXDUP_BC
EXVVA_BC
Q2EX2
VPQ51
VPQ25
Q51_CL
Q25_CL
EXDUP_ES
EXVVA_ES
Q2EX3
&
&
&
≥1
1
Q2REL
Q2ITL

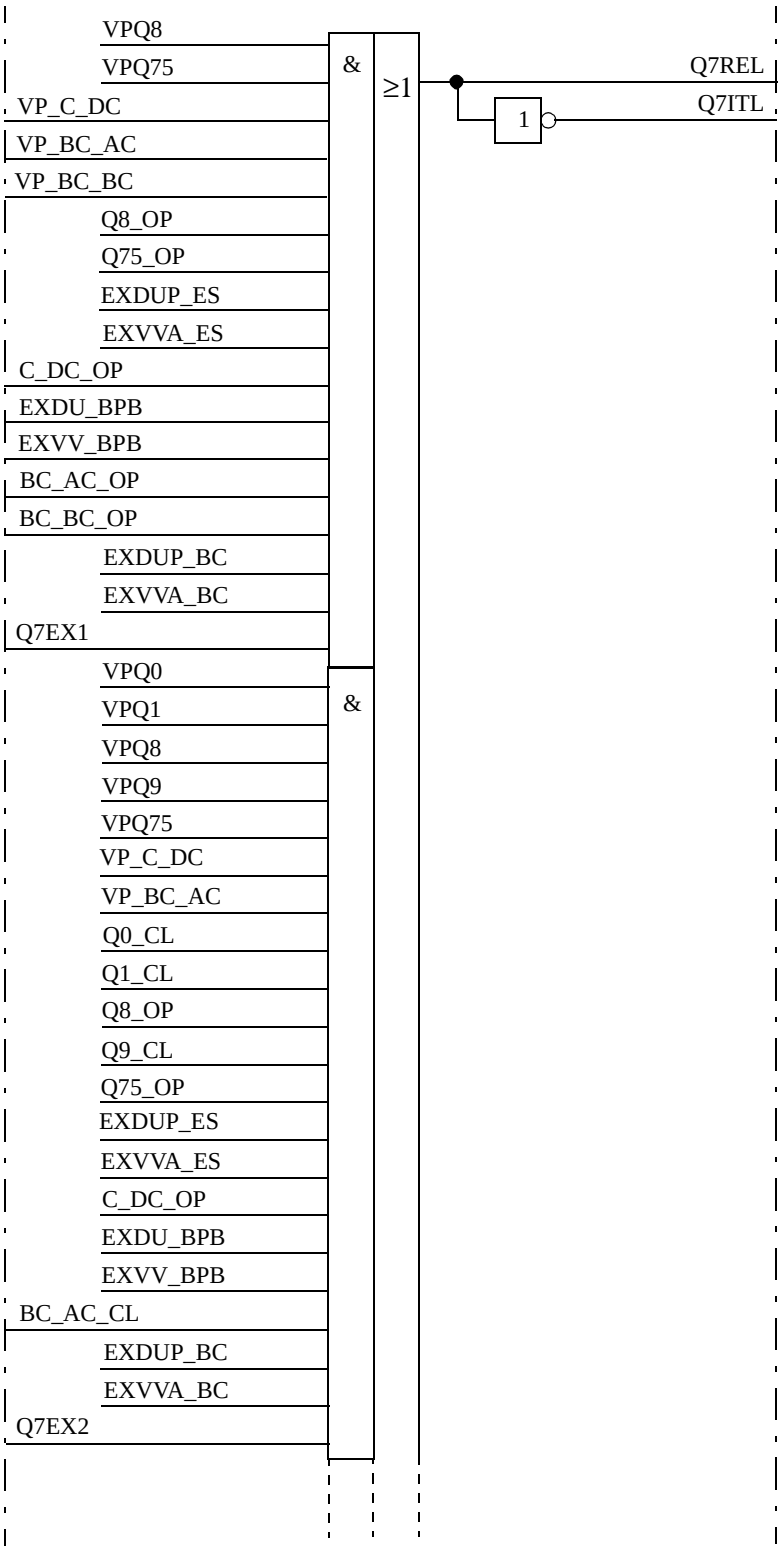
VPQ8
VPQ75
VP_C_DC
VP_BC_AC
VP_BC_BC
Q8_OP
Q75_OP
EXDUP_ES
EXVVA_ES
C_DC_OP
EXDU_BPB
EXVV_BPB
BC_AC_OP
BC_BC_OP
EXDUP_BC
EXVVA_BC
Q7EX1
&
≥1
1
Q7REL
Q7ITL
VPQ0
VPQ1
VPQ8
VPQ9
VPQ75
VP_C_DC
VP_BC_AC
Q0_CL
Q1_CL
Q8_OP
Q9_CL
Q75_OP
EXDUP_ES
EXVVA_ES
C_DC_OP
EXDU_BPB
EXVV_BPB
BC_AC_CL
EXDUP_BC
EXVVA_BC
Q7EX2
&

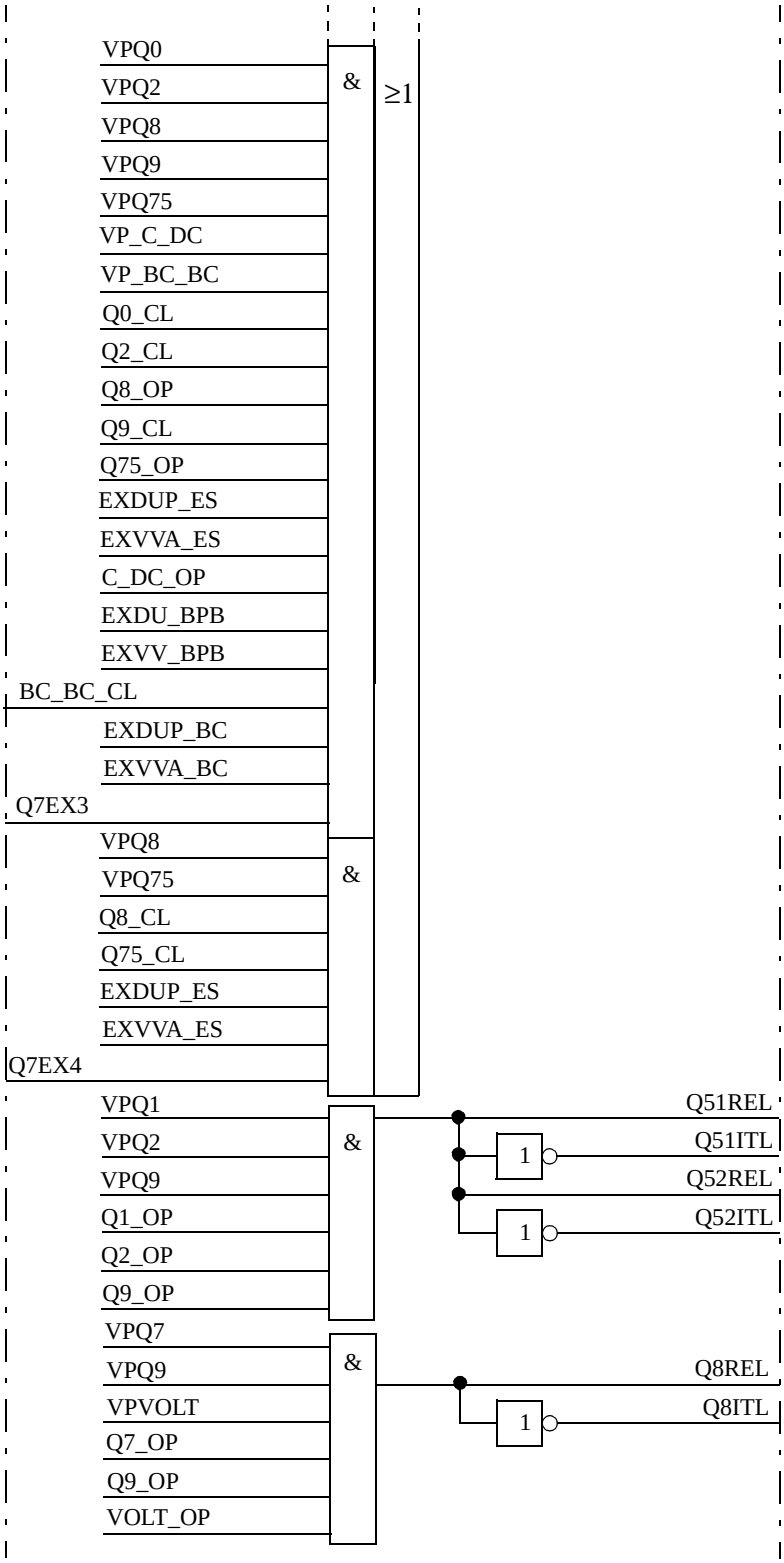
VPQ0
VPQ2
VPQ8
VPQ9
VPQ75
VP_C_DC
VP_BC_BC
Q0_CL
Q2_CL
Q8_OP
Q9_CL
Q75_OP
EXDUP_ES
EXVVA_ES
C_DC_OP
EXDU_BPB
EXVV_BPB
BC_BC_CL
EXDUP_BC
EXVVA_BC
Q7EX3
&
≥1
VPQ8
VPQ75
Q8_CL
Q75_CL
EXDUP_ES
EXVVA_ES
Q7EX4
&
VPQ1
VPQ2
VPQ9
Q1_OP
Q2_OP
Q9_OP
&
1
1
Q51REL
Q51ITL
Q52REL
Q52ITL
VPQ7
VPQ9
VPVOLT
Q7_OP
Q9_OP
VOLT_OP
&
1
Q8REL
Q8ITL

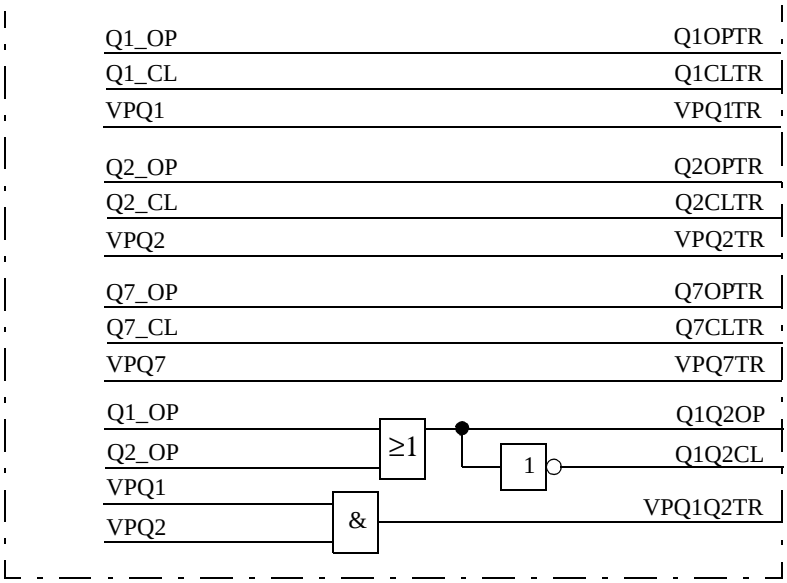

Figure 43: Function block diagram of ABC_LINE

5.1.2 ABC_BC

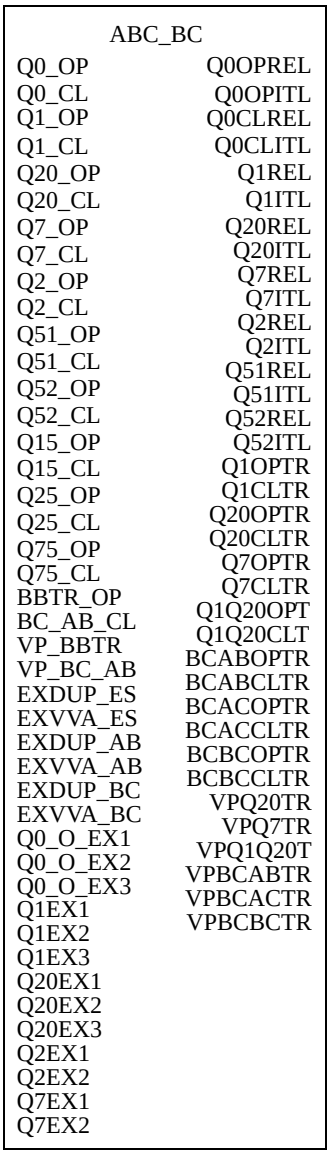

Figure 44: Function block ABC_BC

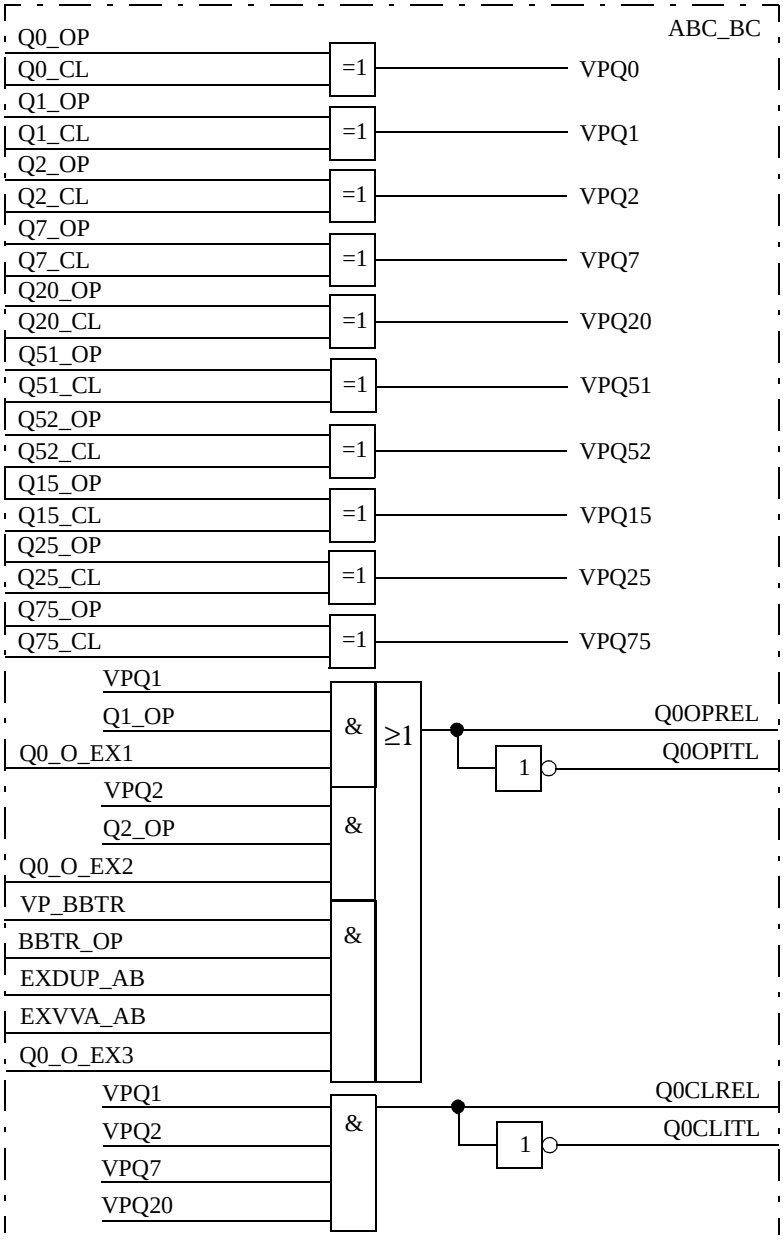
ABC_BC
Q0_OP
Q0_CL
Q1_OP
Q1_CL
Q2_OP
Q2_CL
Q7_OP
Q7_CL
Q20_OP
Q20_CL
Q51_OP
Q51_CL
Q52_OP
Q52_CL
Q15_OP
Q15_CL
Q25_OP
Q25_CL
Q75_OP
Q75_CL
=1
VPQ0
VPQ1
VPQ2
VPQ7
VPQ20
VPQ51
VPQ52
VPQ15
VPQ25
VPQ75
VPQ1
Q1_OP
Q0_O_EX1
VPQ2
Q2_OP
Q0_O_EX2
VP_BBTR
BBTR_OP
EXDUP_AB
EXVVA_AB
Q0_O_EX3
&
≥1
1
Q0OPREL
Q0OPITL
VPQ1
VPQ2
VPQ7
VPQ20
Q0CLREL
Q0CLITL

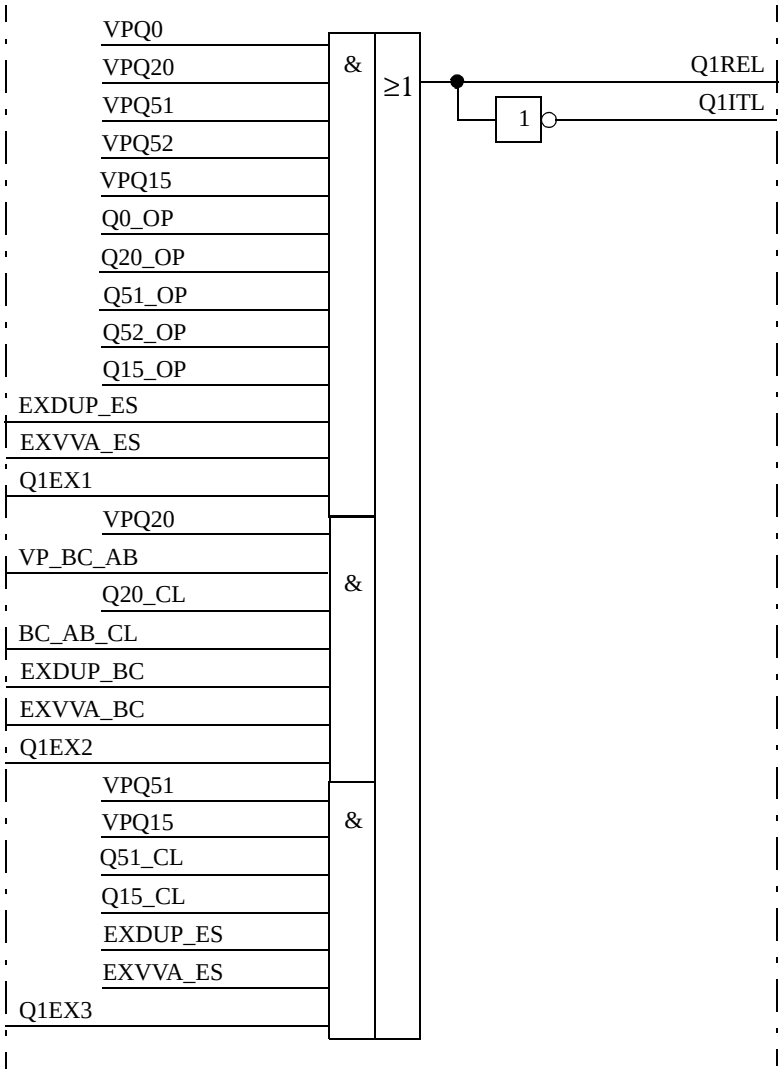
VPQ0
VPQ20
VPQ51
VPQ52
VPQ15
Q0_OP
Q20_OP
Q51_OP
Q52_OP
Q15_OP
EXDUP_ES
EXVVA_ES
Q1EX1
VPQ20
VP_BC_AB
Q20_CL
BC_AB_CL
EXDUP_BC
EXVVA_BC
Q1EX2
VPQ51
VPQ15
Q51_CL
Q15_CL
EXDUP_ES
EXVVA_ES
Q1EX3
&
&
&
≥1
1
Q1REL
Q1ITL

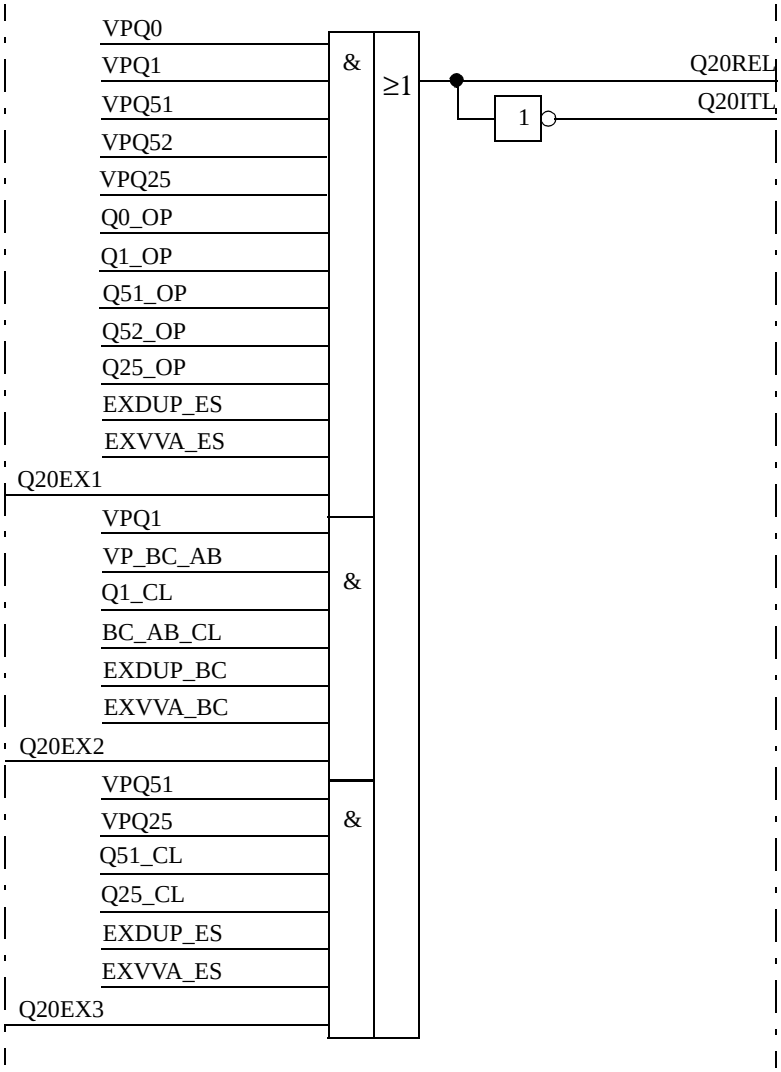
VPQ0
VPQ1
VPQ51
VPQ52
VPQ25
Q0_OP
Q1_OP
Q51_OP
Q52_OP
Q25_OP
EXDUP_ES
EXVVA_ES
Q20EX1
&
VPQ1
VP_BC_AB
Q1_CL
BC_AB_CL
EXDUP_BC
EXVVA_BC
Q20EX2
&
VPQ51
VPQ25
Q51_CL
Q25_CL
EXDUP_ES
EXVVA_ES
Q20EX3
&
≥1
1
Q20REL
Q20ITL

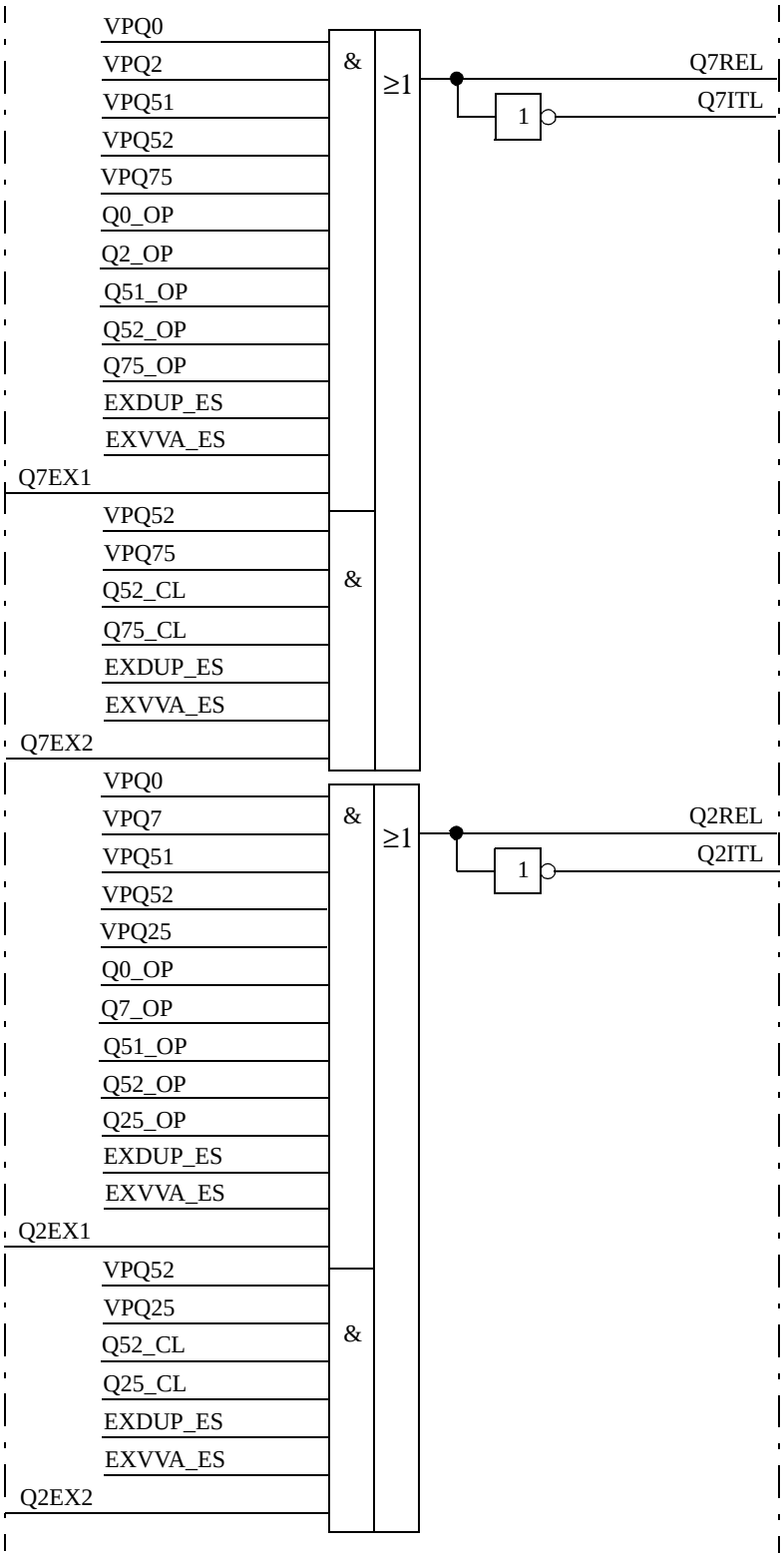
VPQ0
VPQ2
VPQ51
VPQ52
VPQ75
Q0_OP
Q2_OP
Q51_OP
Q52_OP
Q75_OP
EXDUP_ES
EXVVA_ES
Q7EX1
&
≥1
1
Q7REL
Q7ITL
VPQ52
VPQ75
Q52_CL
Q75_CL
EXDUP_ES
EXVVA_ES
Q7EX2
&
VPQ0
VPQ7
VPQ51
VPQ52
VPQ25
Q0_OP
Q7_OP
Q51_OP
Q52_OP
Q25_OP
EXDUP_ES
EXVVA_ES
Q2EX1
&
≥1
1
Q2REL
Q2ITL
VPQ52
VPQ25
Q52_CL
Q25_CL
EXDUP_ES
EXVVA_ES
Q2EX2
&

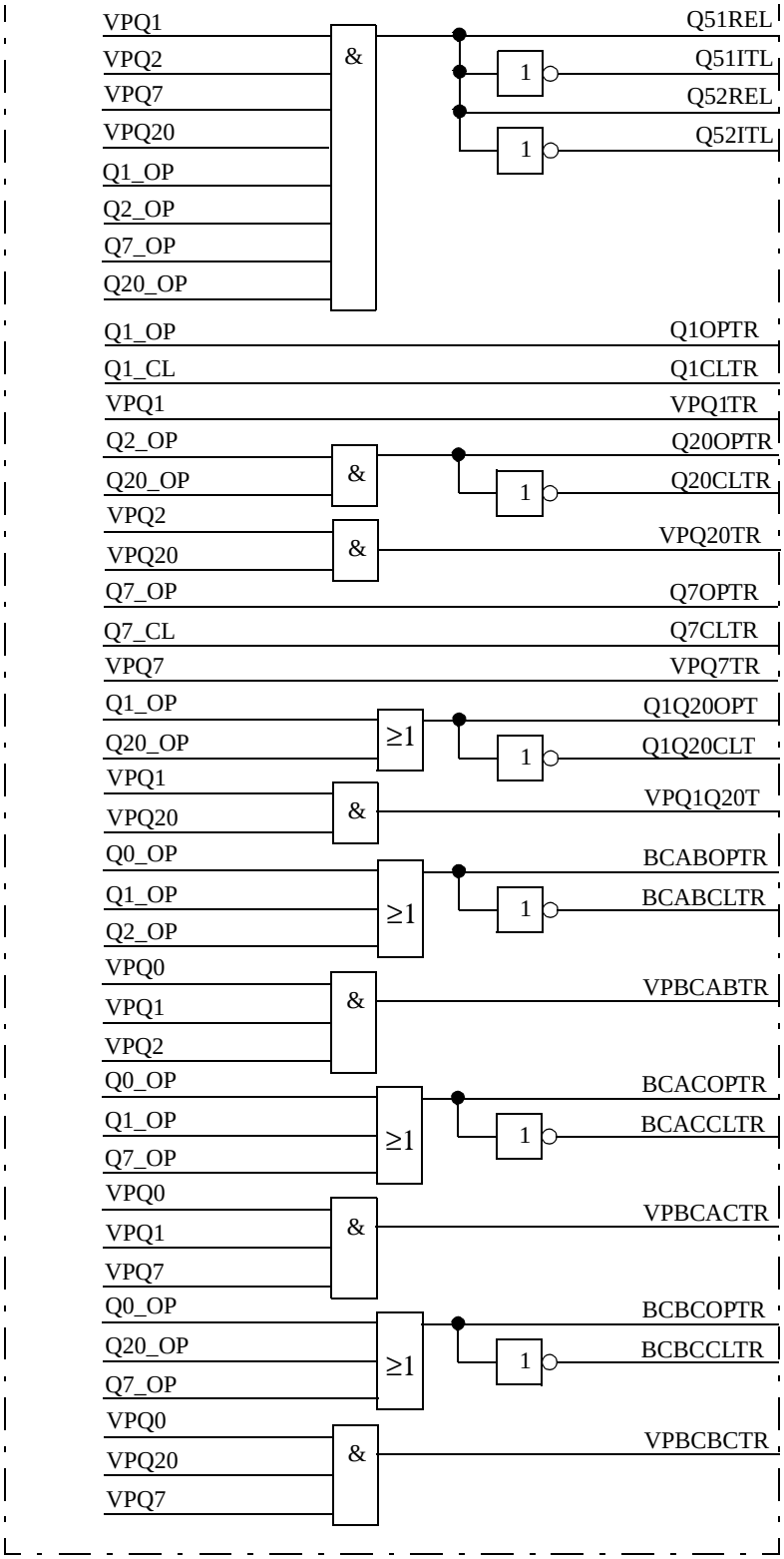

Figure 45: Function block diagram of ABC_BC

5.1.3 AB_TRAFO

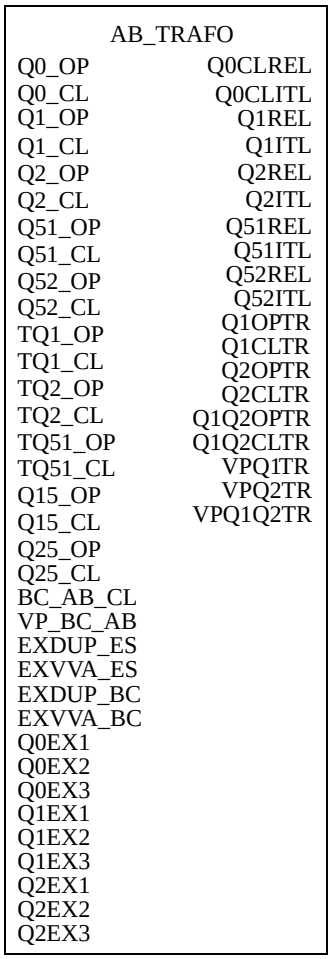

Figure 46: Function block AB_TRAFO

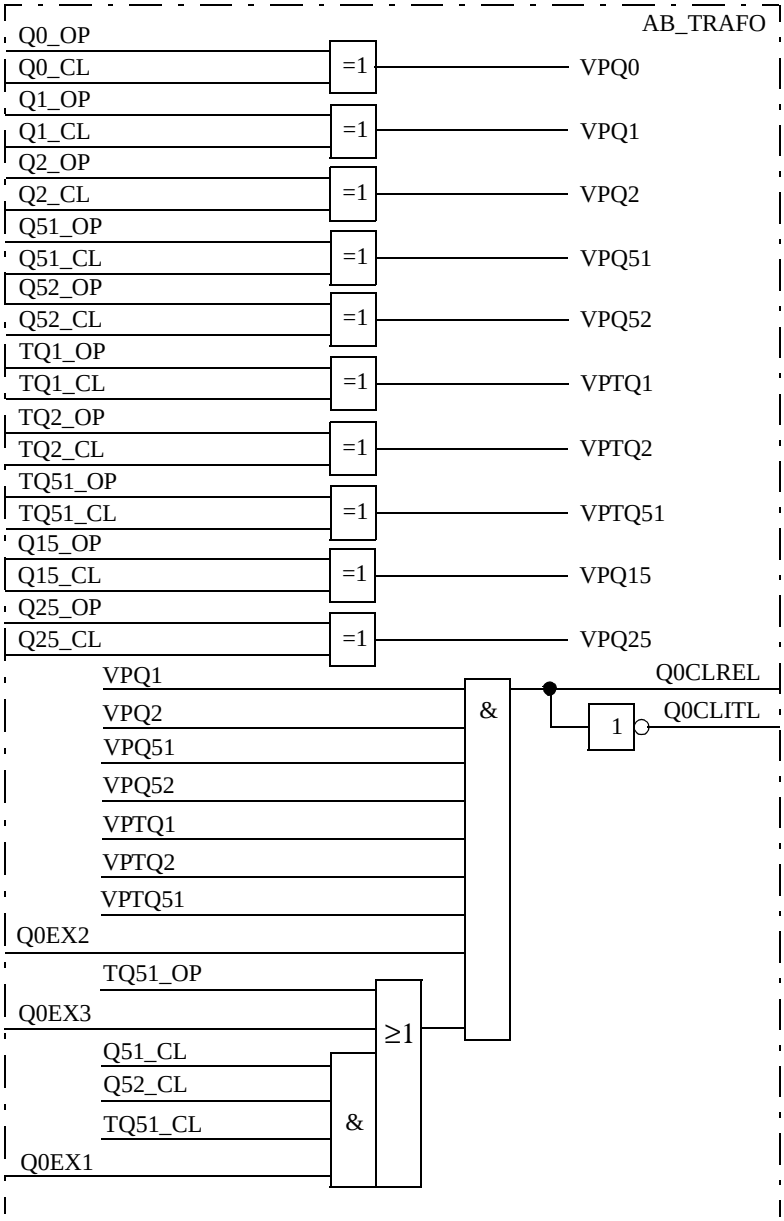
AB_TRAFO
Q0_OP
Q0_CL
Q1_OP
Q1_CL
Q2_OP
Q2_CL
Q51_OP
Q51_CL
Q52_OP
Q52_CL
TQ1_OP
TQ1_CL
TQ2_OP
TQ2_CL
TQ51_OP
TQ51_CL
Q15_OP
Q15_CL
Q25_OP
Q25_CL
=1
VPQ0
VPQ1
VPQ2
VPQ51
VPQ52
VPTQ1
VPTQ2
VPTQ51
VPQ15
VPQ25
VPQ1
VPQ2
VPQ51
VPQ52
VPTQ1
VPTQ2
VPTQ51
Q0EX2
TQ51_OP
Q0EX3
Q51_CL
Q52_CL
TQ51_CL
Q0EX1
&
≥1
&
1
Q0CLREL
Q0CLITL

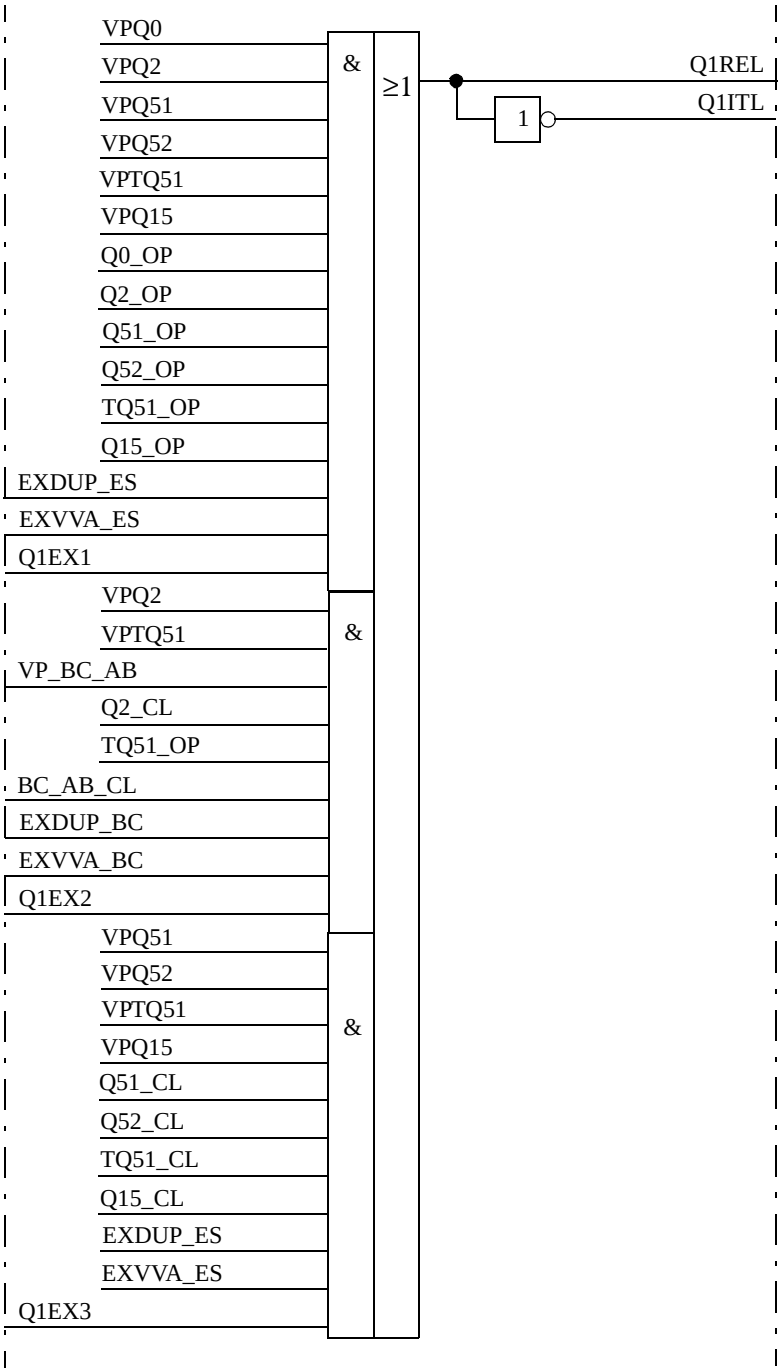
VPQ0
VPQ2
VPQ51
VPQ52
VPTQ51
VPQ15
Q0_OP
Q2_OP
Q51_OP
Q52_OP
TQ51_OP
Q15_OP
EXDUP_ES
EXVVA_ES
Q1EX1
&
VPQ2
VPTQ51
VP_BC_AB
Q2_CL
TQ51_OP
BC_AB_CL
EXDUP_BC
EXVVA_BC
Q1EX2
&
VPQ51
VPQ52
VPTQ51
VPQ15
Q51_CL
Q52_CL
TQ51_CL
Q15_CL
EXDUP_ES
EXVVA_ES
Q1EX3
&
≥1
1
Q1REL
Q1ITL

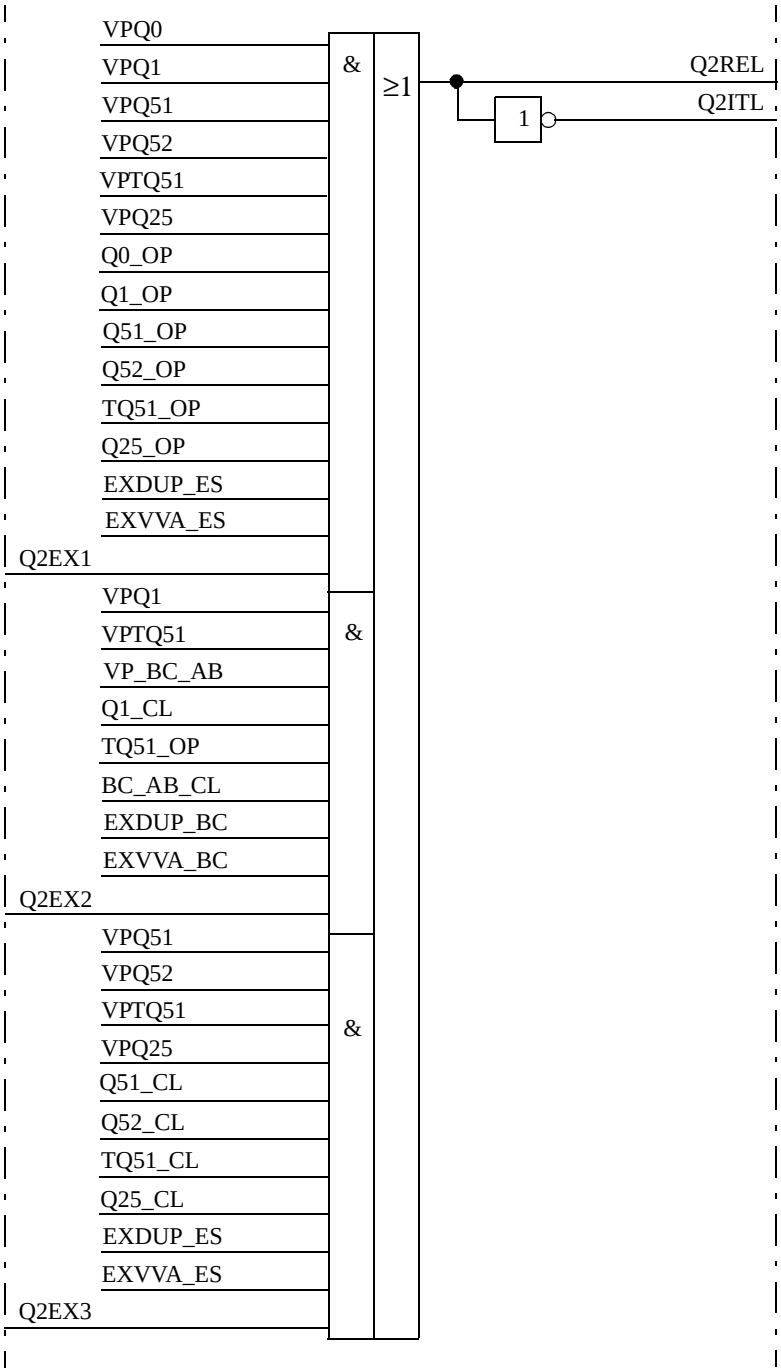
VPQ0
VPQ1
VPQ51
VPQ52
VPTQ51
VPQ25
Q0_OP
Q1_OP
Q51_OP
Q52_OP
TQ51_OP
Q25_OP
EXDUP_ES
EXVVA_ES
Q2EX1
&
VPQ1
VPTQ51
VP_BC_AB
Q1_CL
TQ51_OP
BC_AB_CL
EXDUP_BC
EXVVA_BC
Q2EX2
&
VPQ51
VPQ52
VPTQ51
VPQ25
Q51_CL
Q52_CL
TQ51_CL
Q25_CL
EXDUP_ES
EXVVA_ES
Q2EX3
&
≥1
1
Q2REL
Q2ITL

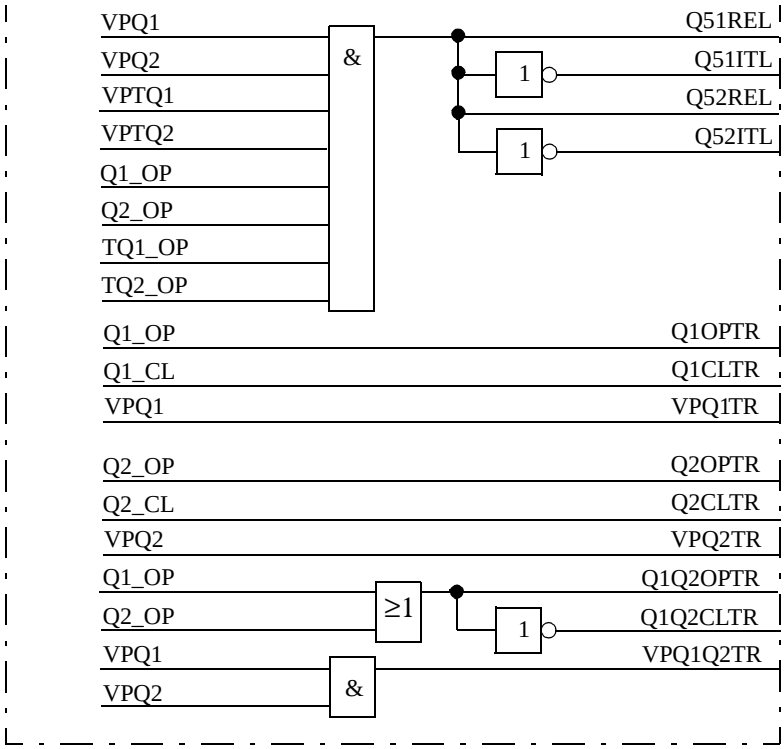

Figure 47: Function block diagram of AB_TRAFO

5.1.4 A1A2_BS

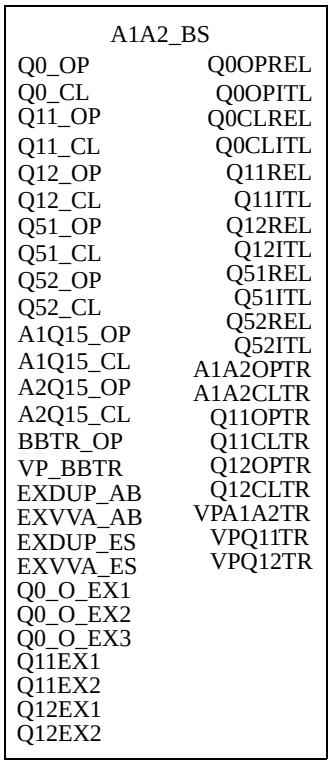

Figure 48: Function block A1A2_BS

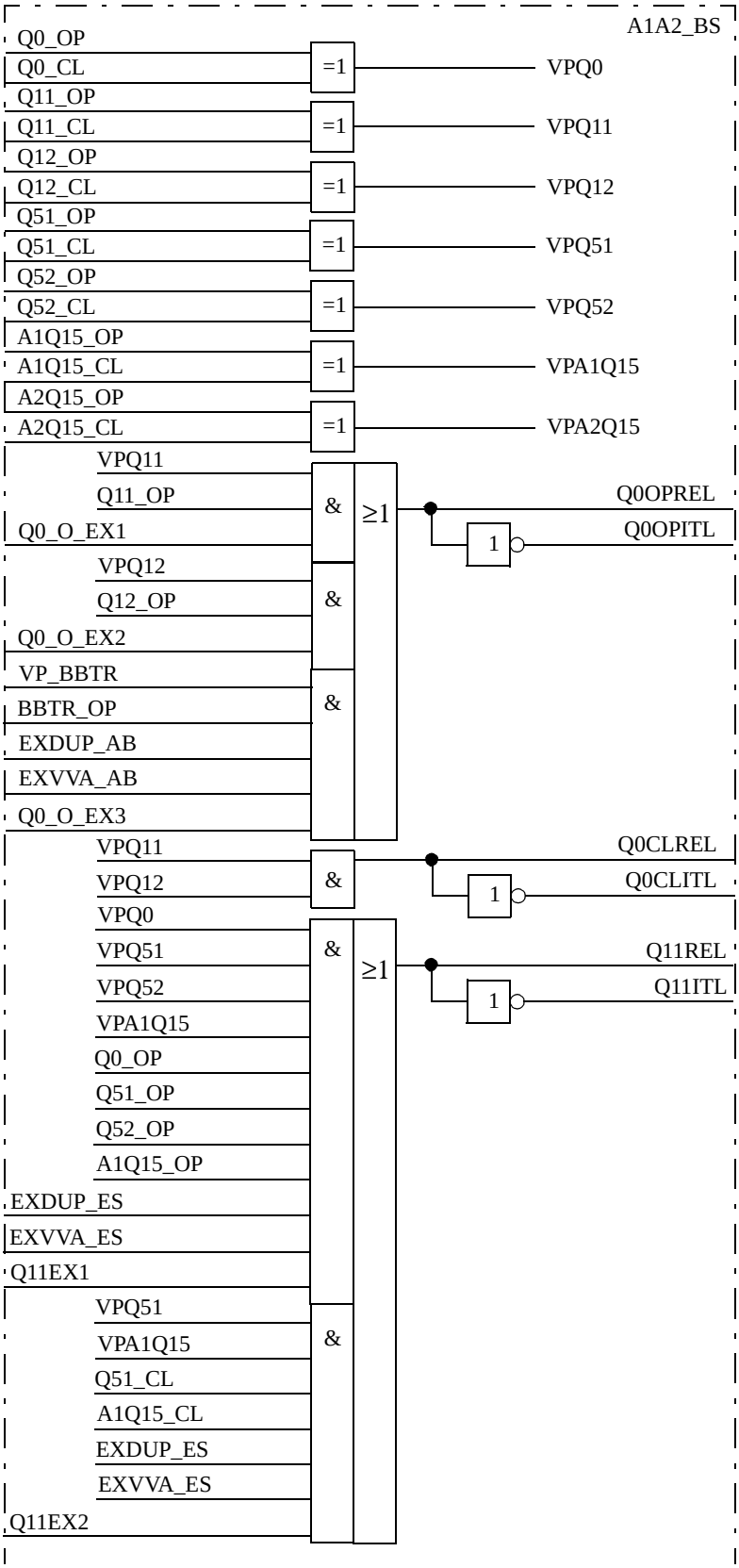
A1A2_BS
Q0_OP
Q0_CL
Q11_OP
Q11_CL
Q12_OP
Q12_CL
Q51_OP
Q51_CL
Q52_OP
Q52_CL
A1Q15_OP
A1Q15_CL
A2Q15_OP
A2Q15_CL
=1
VPQ0
VPQ11
VPQ12
VPQ51
VPQ52
VPA1Q15
VPA2Q15
VPQ11
Q11_OP
Q0_O_EX1
VPQ12
Q12_OP
Q0_O_EX2
VP_BBTR
BBTR_OP
EXDUP_AB
EXVVA_AB
Q0_O_EX3
&
≥1
1
Q0OPREL
Q0OPITL
VPQ11
VPQ12
VPQ0
VPQ51
VPQ52
VPA1Q15
Q0_OP
Q51_OP
Q52_OP
A1Q15_OP
EXDUP_ES
EXVVA_ES
Q11EX1
Q0CLREL
Q0CLITL
Q11REL
Q11ITL
VPQ51
VPA1Q15
Q51_CL
A1Q15_CL
EXDUP_ES
EXVVA_ES
Q11EX2

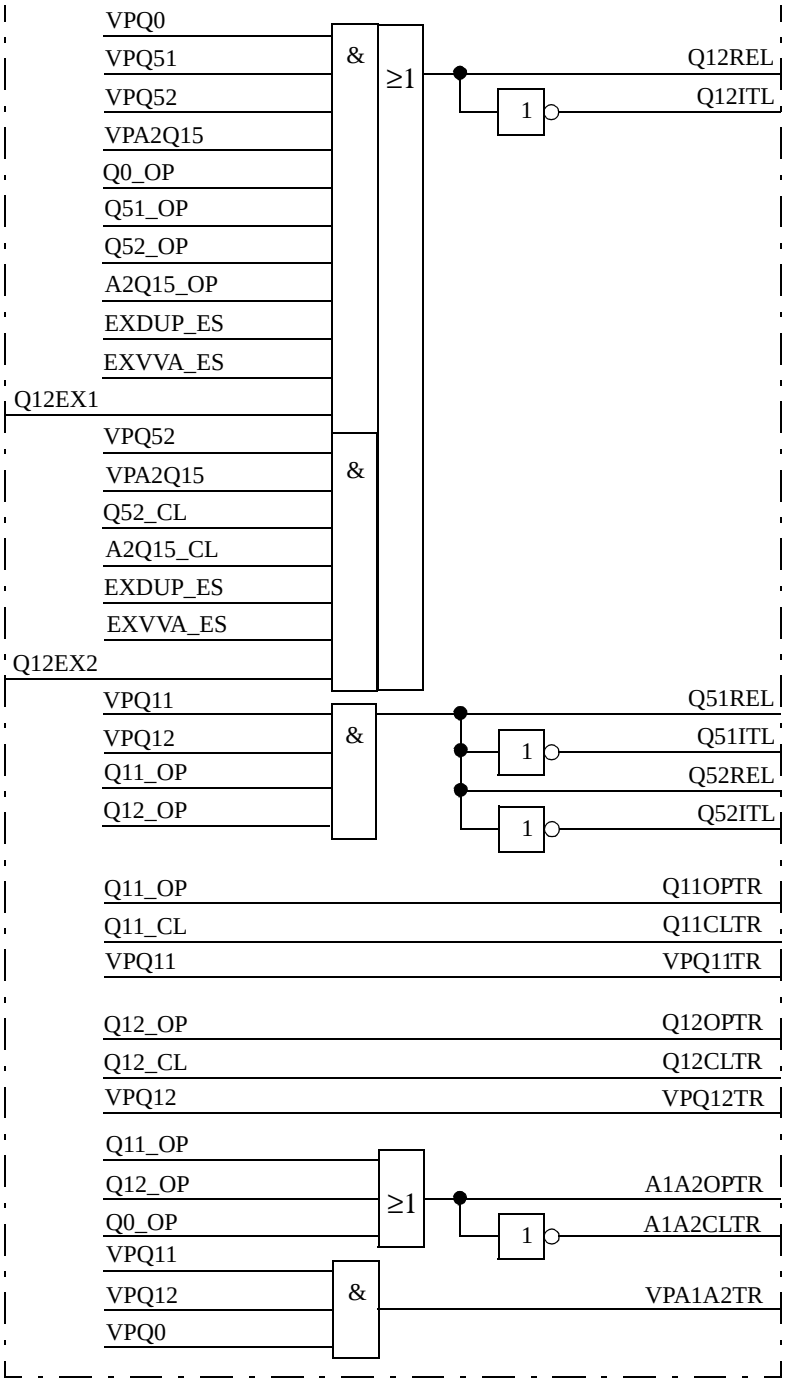

Figure 49: Function block diagram of A1A2_BS

5.1.5 A1A2_DC

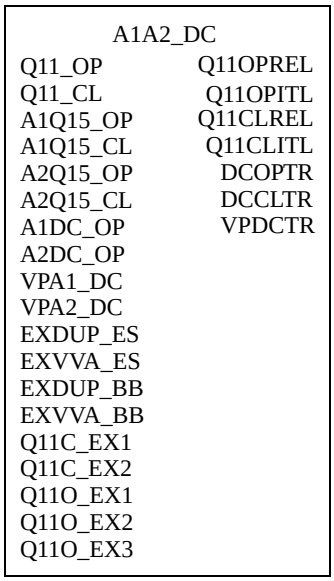

Figure 50: Function block A1A2_DC

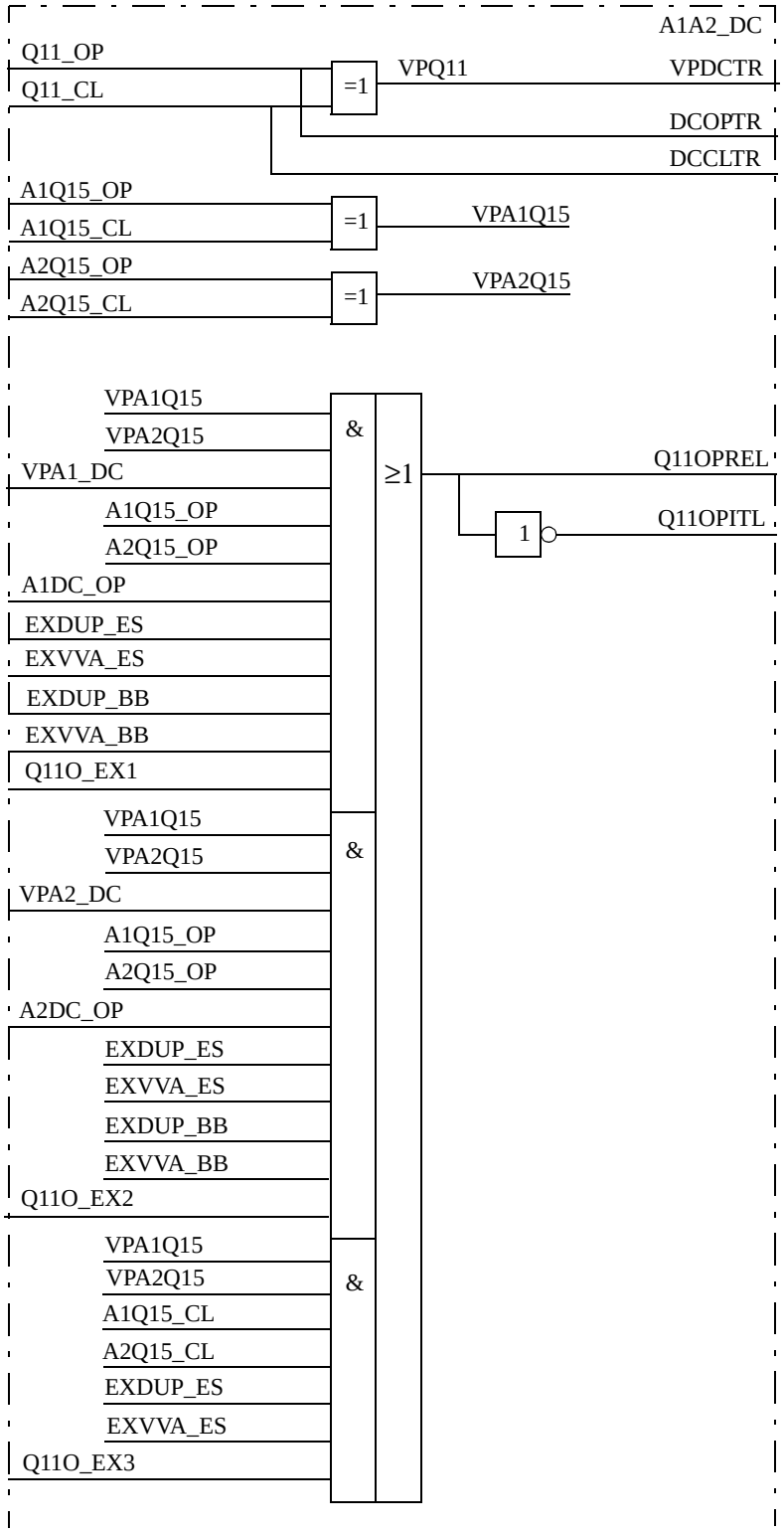
A1A2_DC
Q11_OP
Q11_CL
=1
VPQ11
VPDCTR
DCOPTR
DCCLTR
A1Q15_OP
A1Q15_CL
=1
VPA1Q15
A2Q15_OP
A2Q15_CL
=1
VPA2Q15
VPA1Q15
VPA2Q15
VPA1_DC
A1Q15_OP
A2Q15_OP
A1DC_OP
EXDUP_ES
EXVVA_ES
EXDUP_BB
EXVVA_BB
Q11O_EX1
&
≥1
Q11OPREL
1
Q11OPITL
VPA1Q15
VPA2Q15
VPA2_DC
A1Q15_OP
A2Q15_OP
A2DC_OP
EXDUP_ES
EXVVA_ES
EXDUP_BB
EXVVA_BB
Q11O_EX2
&
VPA1Q15
VPA2Q15
A1Q15_CL
A2Q15_CL
EXDUP_ES
EXVVA_ES
Q11O_EX3
&

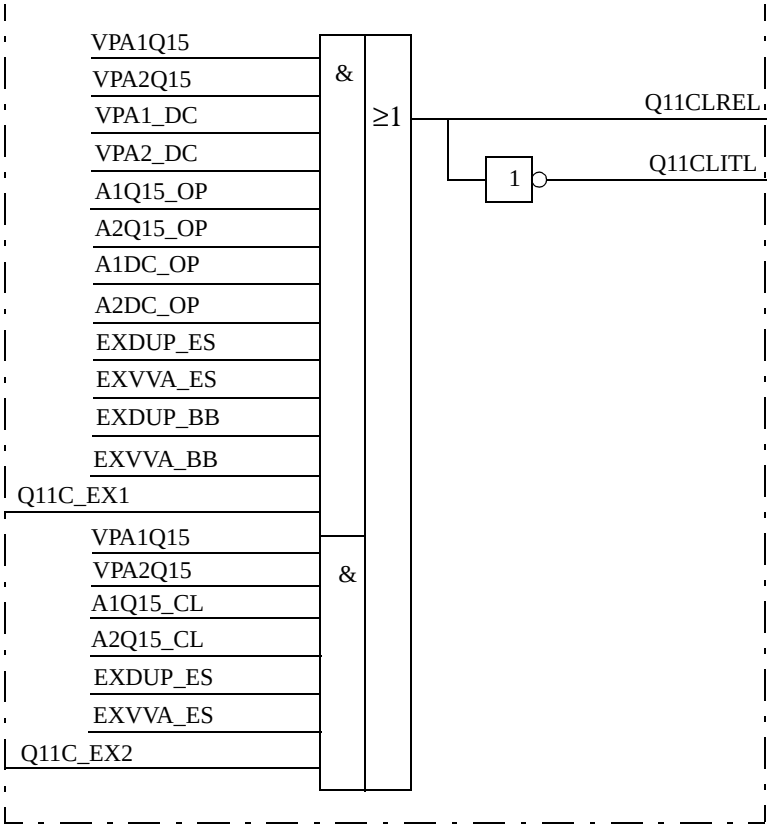

Figure 51: Function block diagram of A1A2_DC

5.1.6 BB_ES

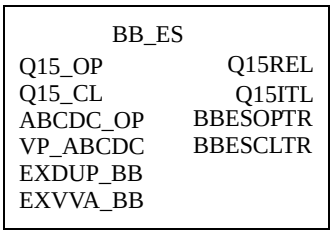

Figure 52: Function block BB_ES

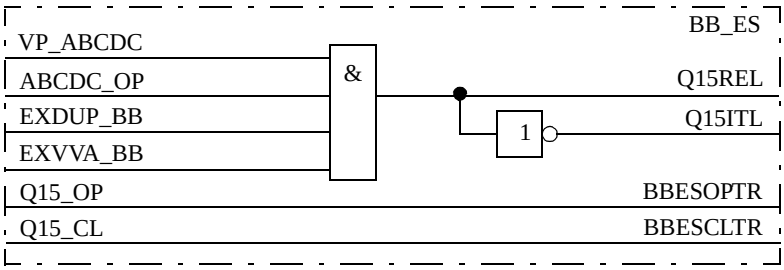

Figure 53: Function block diagram of BB_ES

5.1.7 DB_BUS_A

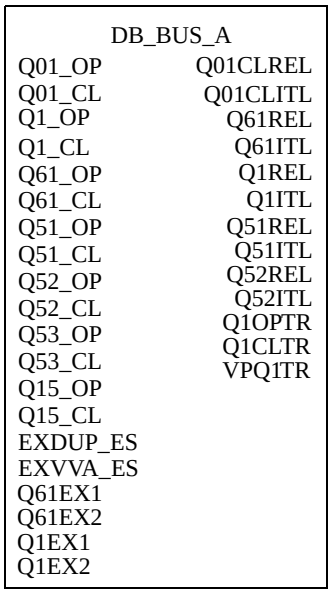

Figure 54: Function block DB_BUS_A

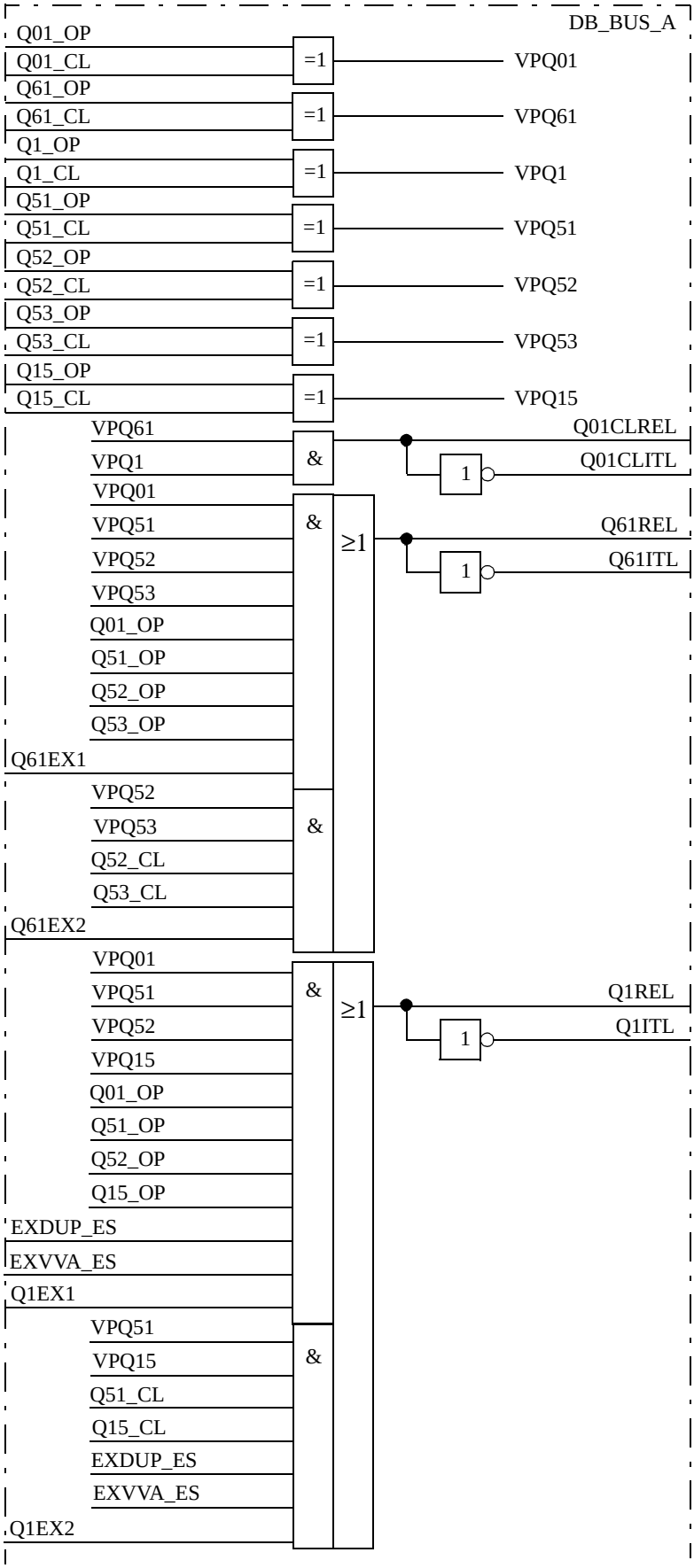
DB_BUS_A
Q01_OP
Q01_CL
Q61_OP
Q61_CL
Q1_OP
Q1_CL
Q51_OP
Q51_CL
Q52_OP
Q52_CL
Q53_OP
Q53_CL
Q15_OP
Q15_CL
=1
VPQ01
VPQ61
VPQ1
VPQ51
VPQ52
VPQ53
VPQ15
VPQ61
VPQ1
VPQ01
VPQ51
VPQ52
VPQ53
Q01_OP
Q51_OP
Q52_OP
Q53_OP
Q61EX1
&
Q01CLREL
1
Q01CLITL
≥1
Q61REL
Q61ITL
VPQ52
VPQ53
Q52_CL
Q53_CL
Q61EX2
VPQ01
VPQ51
VPQ52
VPQ15
Q01_OP
Q51_OP
Q52_OP
Q15_OP
EXDUP_ES
EXVVA_ES
Q1EX1
Q1REL
Q1ITL
VPQ51
VPQ15
Q51_CL
Q15_CL
EXDUP_ES
EXVVA_ES
Q1EX2

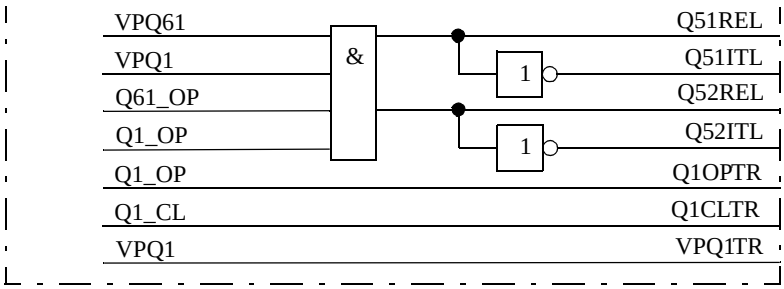

Figure 55: Function block diagram of DB_BUS_A

5.1.8 DB_LINE

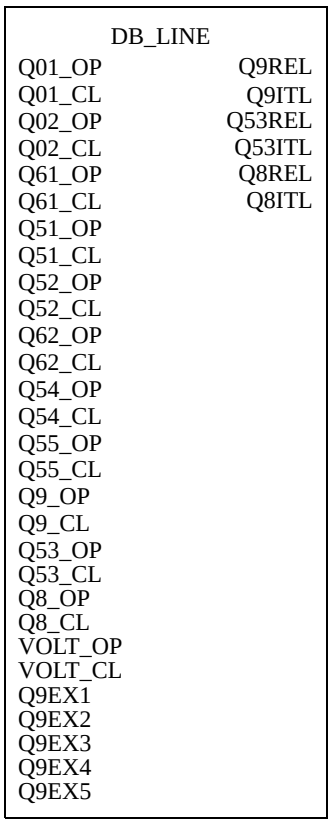

Figure 56: Function block DB_LINE

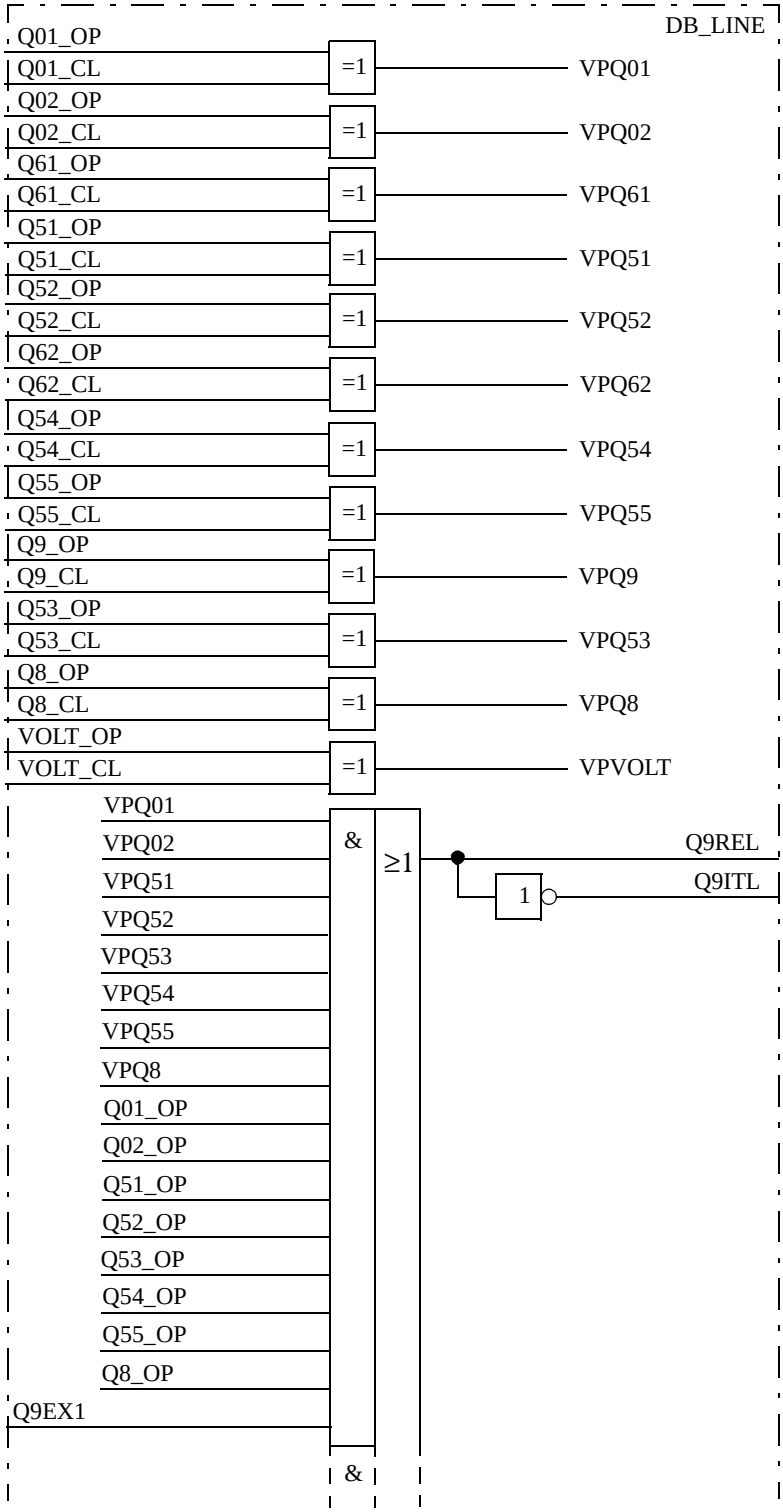
DB_LINE
Q01_OP
Q01_CL
Q02_OP
Q02_CL
Q61_OP
Q61_CL
Q51_OP
Q51_CL
Q52_OP
Q52_CL
Q62_OP
Q62_CL
Q54_OP
Q54_CL
Q55_OP
Q55_CL
Q9_OP
Q9_CL
Q53_OP
Q53_CL
Q8_OP
Q8_CL
VOLT_OP
VOLT_CL
=1
VPQ01
VPQ02
VPQ61
VPQ51
VPQ52
VPQ62
VPQ54
VPQ55
VPQ9
VPQ53
VPQ8
VPVOLT
VPQ01
VPQ02
VPQ51
VPQ52
VPQ53
VPQ54
VPQ55
VPQ8
Q01_OP
Q02_OP
Q51_OP
Q52_OP
Q53_OP
Q54_OP
Q55_OP
Q8_OP
Q9EX1
&
≥1
1
Q9REL
Q9ITL
&

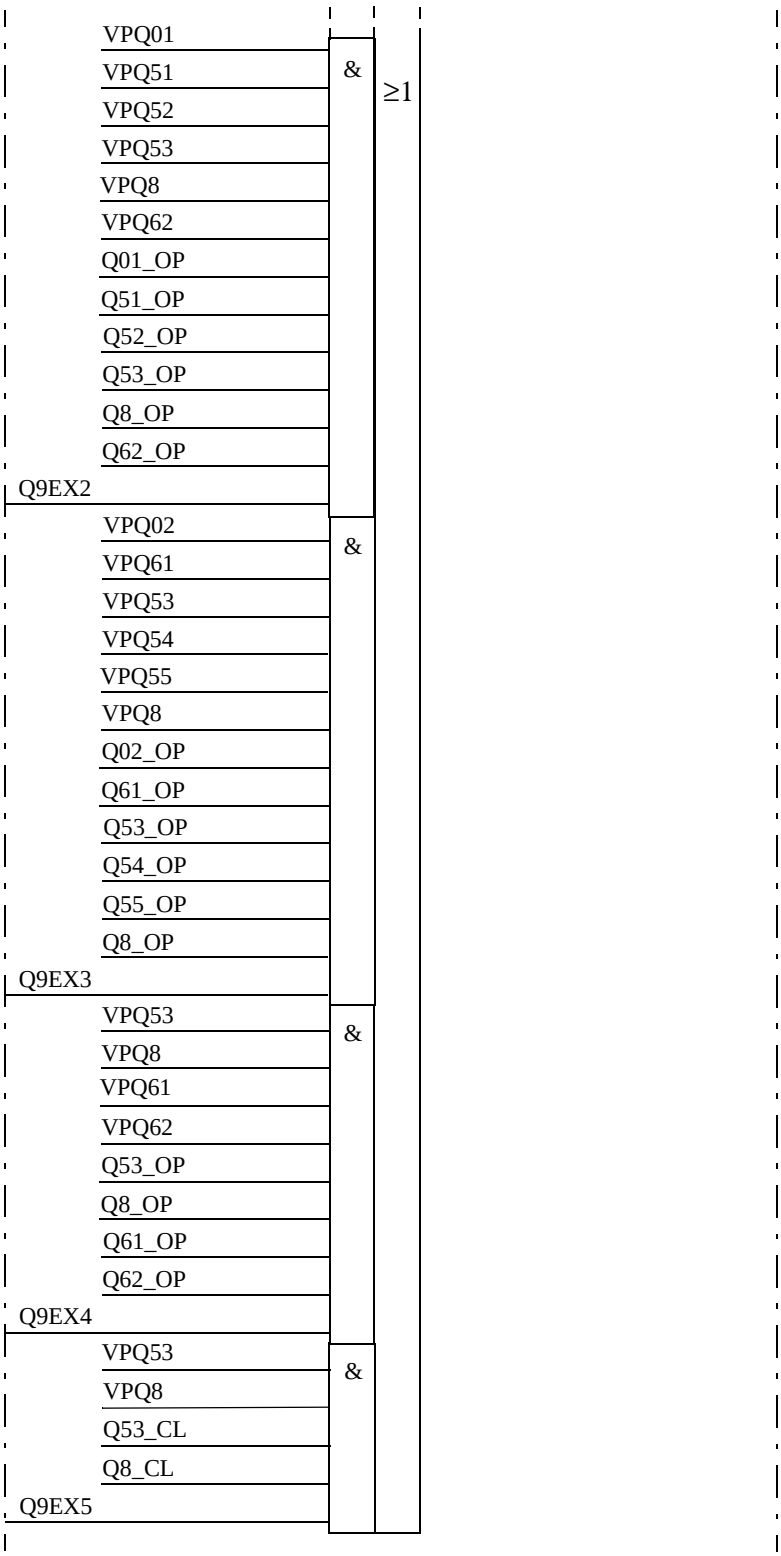
VPQ01
VPQ51
VPQ52
VPQ53
VPQ8
VPQ62
Q01_OP
Q51_OP
Q52_OP
Q53_OP
Q8_OP
Q62_OP
Q9EX2
&
VPQ02
VPQ61
VPQ53
VPQ54
VPQ55
VPQ8
Q02_OP
Q61_OP
Q53_OP
Q54_OP
Q55_OP
Q8_OP
Q9EX3
&
VPQ53
VPQ8
VPQ61
VPQ62
Q53_OP
Q8_OP
Q61_OP
Q62_OP
Q9EX4
&
VPQ53
VPQ8
Q53_CL
Q8_CL
Q9EX5
&
≥1

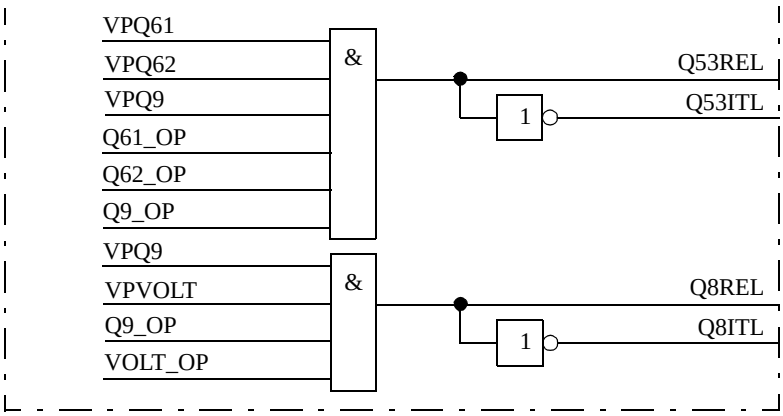

Figure 57: Function block diagram of DB_LINE

5.1.9 DB_BUS_B

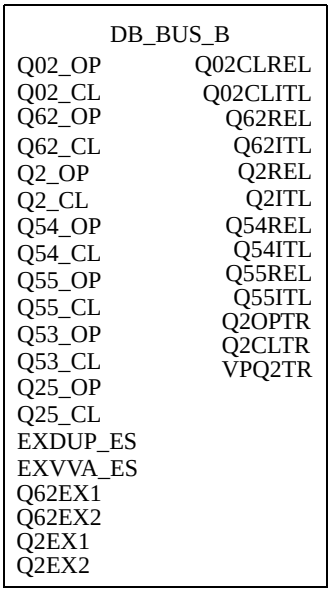

Figure 58: Function block DB_BUS_B

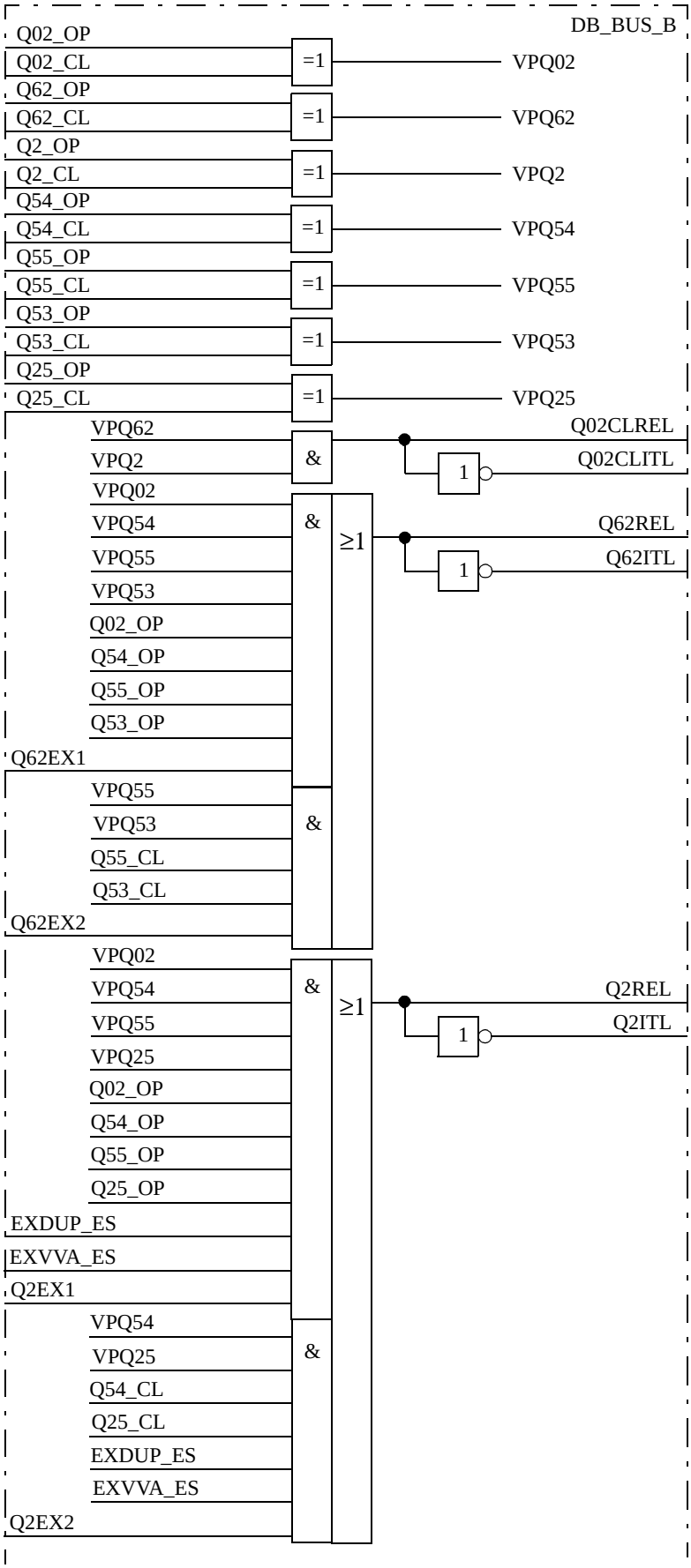
DB_BUS_B
Q02_OP
Q02_CL
=1
VPQ02
Q62_OP
Q62_CL
=1
VPQ62
Q2_OP
Q2_CL
=1
VPQ2
Q54_OP
Q54_CL
=1
VPQ54
Q55_OP
Q55_CL
=1
VPQ55
Q53_OP
Q53_CL
=1
VPQ53
Q25_OP
Q25_CL
=1
VPQ25
VPQ62
VPQ2
&
Q02CLREL
1
Q02CLITL
VPQ02
VPQ54
VPQ55
VPQ53
Q02_OP
Q54_OP
Q55_OP
Q53_OP
Q62EX1
&
≥1
Q62REL
1
Q62ITL
VPQ55
VPQ53
Q55_CL
Q53_CL
Q62EX2
&
VPQ02
VPQ54
VPQ55
VPQ25
Q02_OP
Q54_OP
Q55_OP
Q25_OP
EXDUP_ES
EXVVA_ES
Q2EX1
&
≥1
Q2REL
1
Q2ITL
VPQ54
VPQ25
Q54_CL
Q25_CL
EXDUP_ES
EXVVA_ES
Q2EX2
&

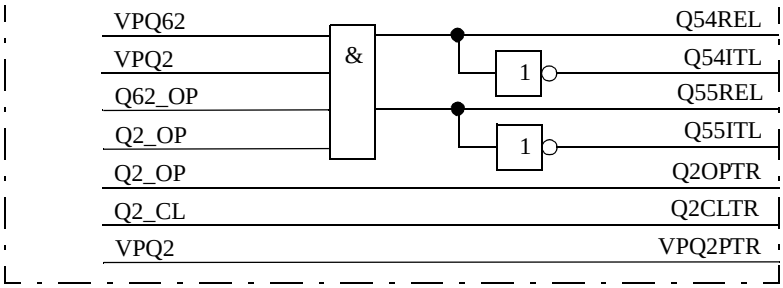

Figure 59: Function block diagram of DB_BUS_B

5.1.10 BH_LINE_A

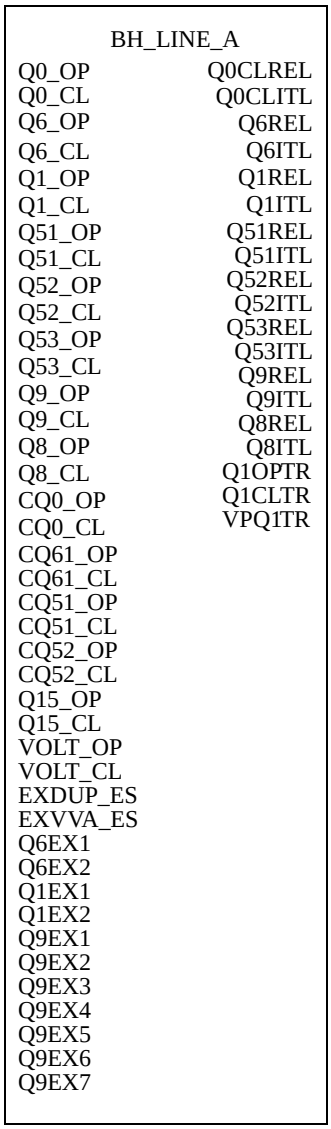

Figure 60: Function block BH_LINE_A

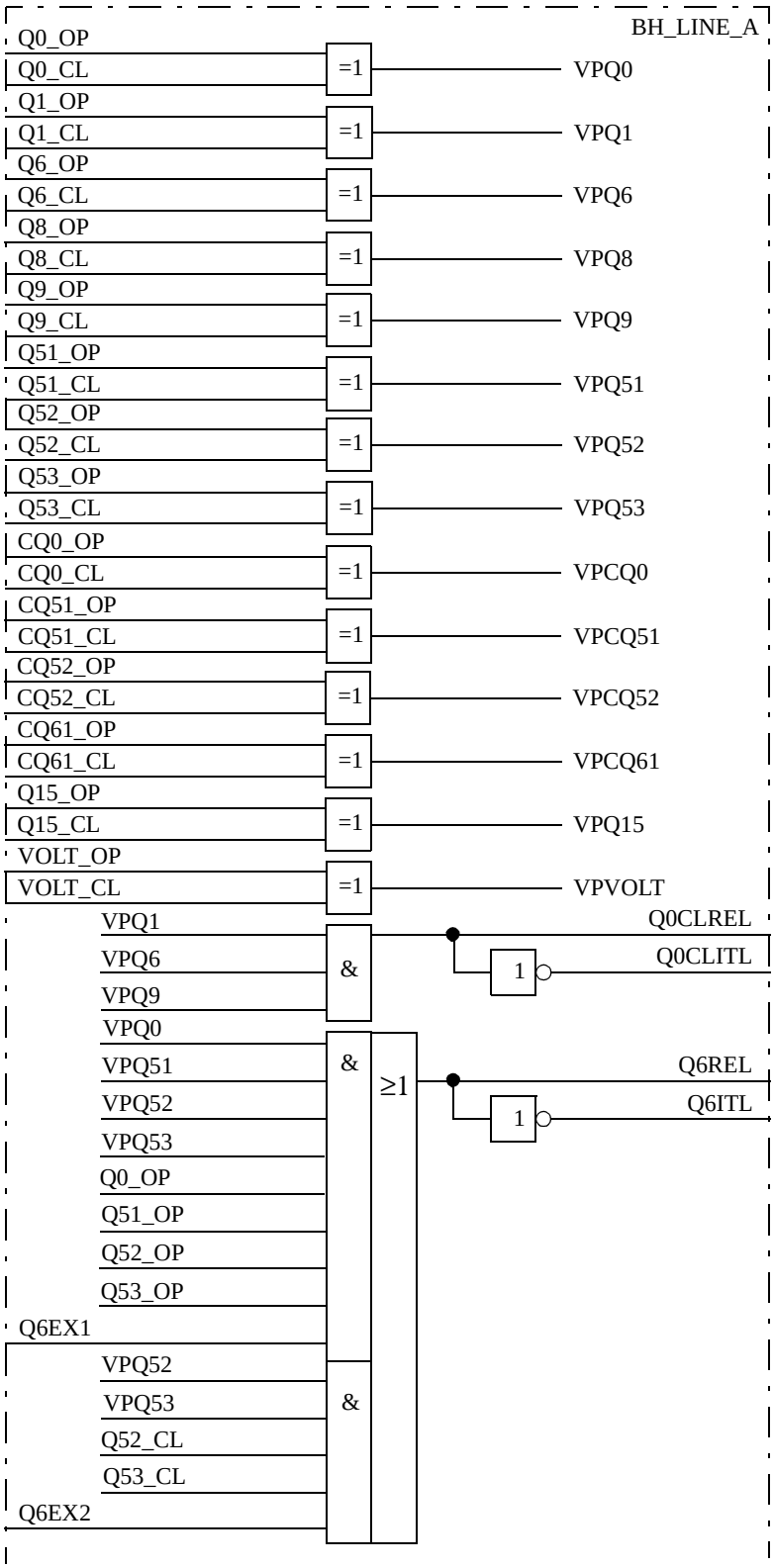
BH_LINE_A
Q0_OP
Q0_CL
Q1_OP
Q1_CL
Q6_OP
Q6_CL
Q8_OP
Q8_CL
Q9_OP
Q9_CL
Q51_OP
Q51_CL
Q52_OP
Q52_CL
Q53_OP
Q53_CL
CQ0_OP
CQ0_CL
CQ51_OP
CQ51_CL
CQ52_OP
CQ52_CL
CQ61_OP
CQ61_CL
Q15_OP
Q15_CL
VOLT_OP
VOLT_CL
=1
VPQ0
VPQ1
VPQ6
VPQ8
VPQ9
VPQ51
VPQ52
VPQ53
VPCQ0
VPCQ51
VPCQ52
VPCQ61
VPQ15
VPVOLT
VPQ1
VPQ6
VPQ9
&
Q0CLREL
1
Q0CLITL
VPQ0
VPQ51
VPQ52
VPQ53
Q0_OP
Q51_OP
Q52_OP
Q53_OP
Q6EX1
&
≥1
Q6REL
1
Q6ITL
VPQ52
VPQ53
Q52_CL
Q53_CL
Q6EX2
&

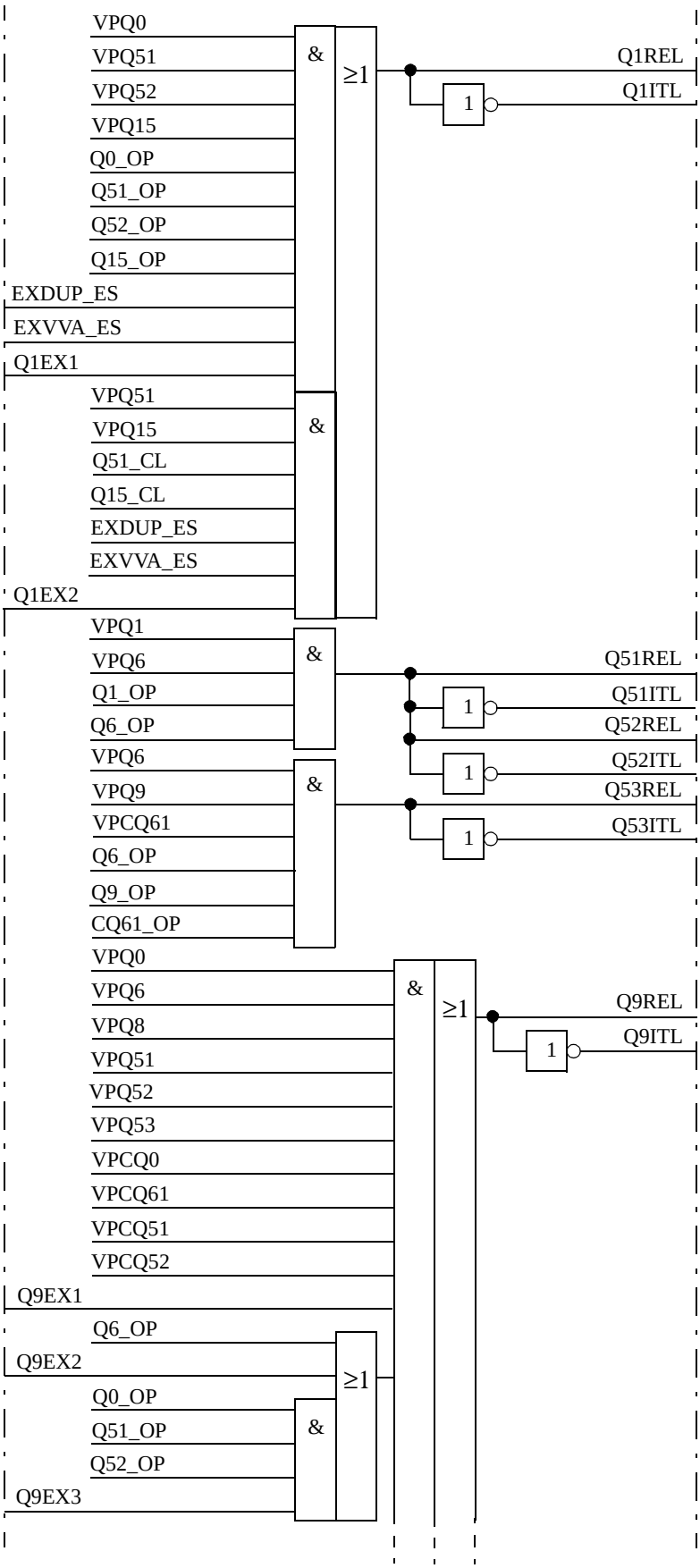
VPQ0
VPQ51
VPQ52
VPQ15
Q0_OP
Q51_OP
Q52_OP
Q15_OP
EXDUP_ES
EXVVA_ES
Q1EX1
&
≥1
Q1REL
1
Q1ITL
VPQ51
VPQ15
Q51_CL
Q15_CL
EXDUP_ES
EXVVA_ES
Q1EX2
&
VPQ1
VPQ6
Q1_OP
Q6_OP
&
Q51REL
1
Q51ITL
Q52REL
VPQ6
VPQ9
VPCQ61
Q6_OP
Q9_OP
CQ61_OP
&
1
Q52ITL
Q53REL
1
Q53ITL
VPQ0
VPQ6
VPQ8
VPQ51
VPQ52
VPQ53
VPCQ0
VPCQ61
VPCQ51
VPCQ52
Q9EX1
&
≥1
Q9REL
1
Q9ITL
Q6_OP
Q9EX2
Q0_OP
Q51_OP
Q52_OP
Q9EX3
&
≥1

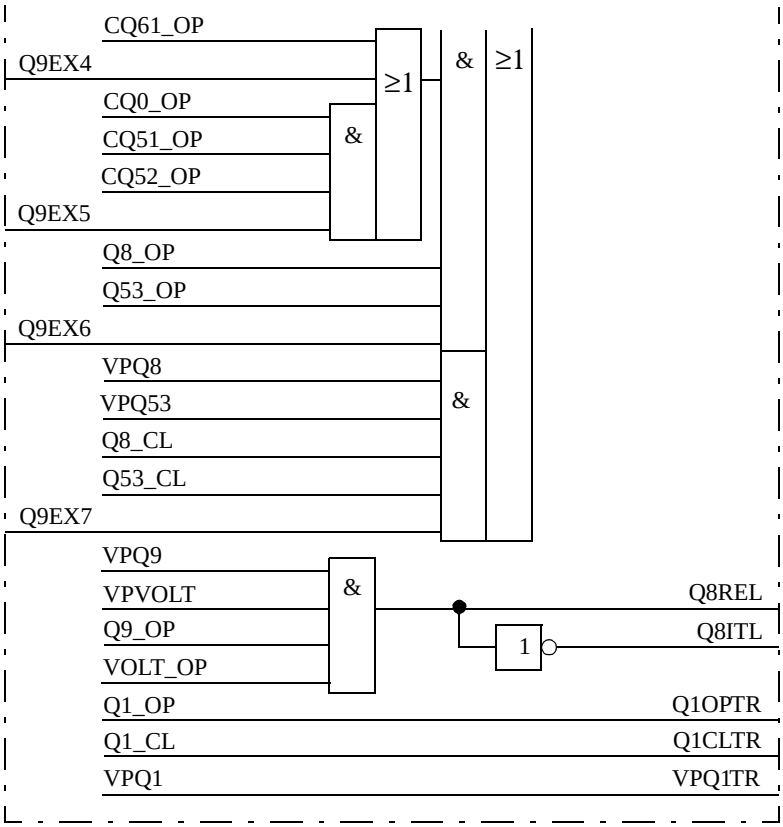

Figure 61: Function block diagram of BH_LINE_A

5.1.11 BH_CONN

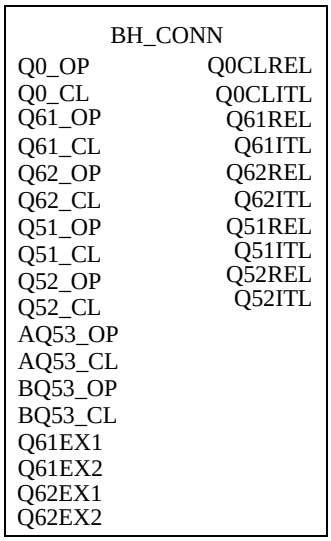

Figure 62: Function block BH_CONN

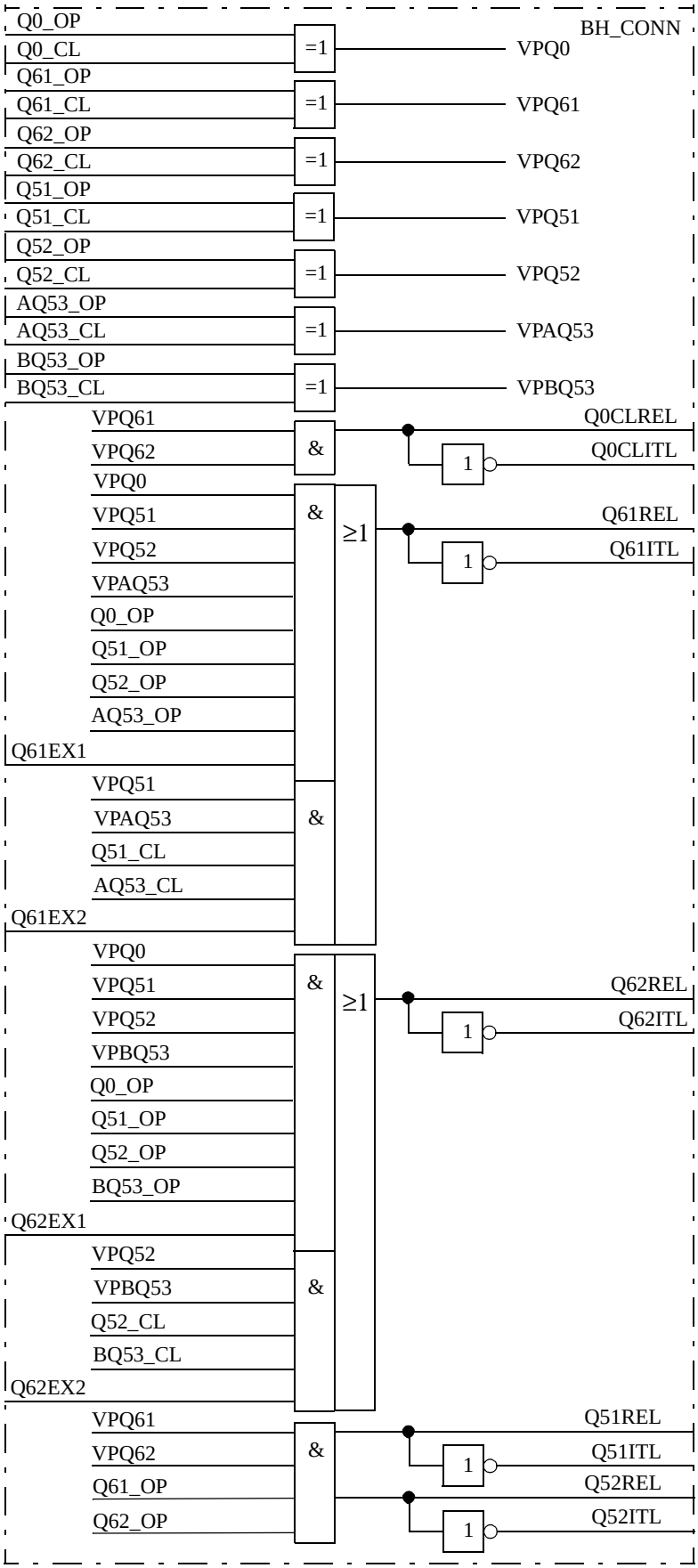

Figure 63: Function block diagram of BH_CONN

5.1.12 BH_LINE_B

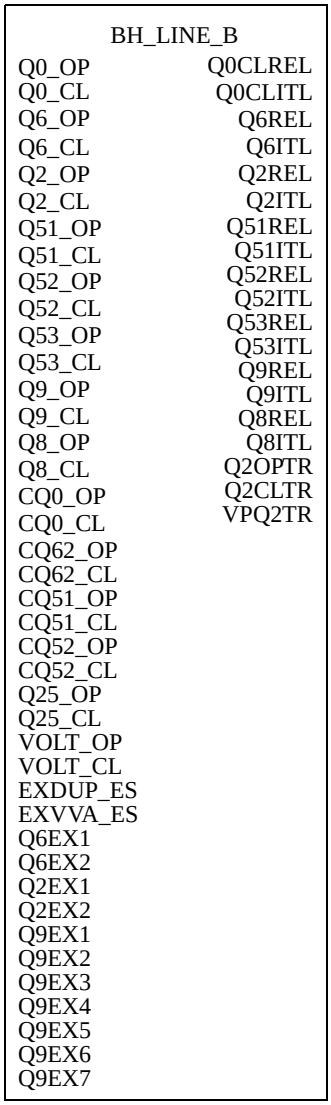

Figure 64: Function block BH_LINE_B

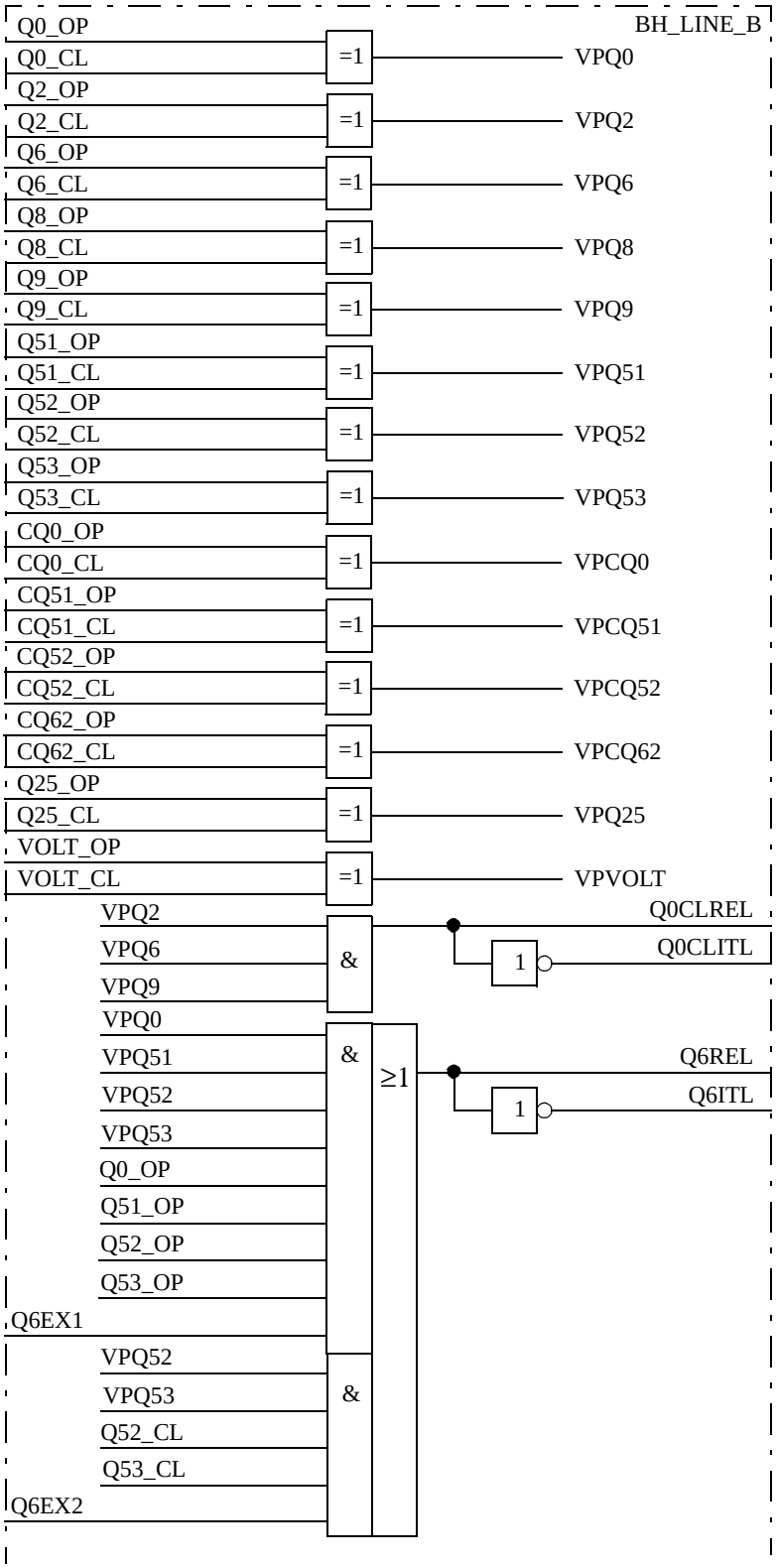
BH_LINE_B
Q0_OP
Q0_CL
Q2_OP
Q2_CL
Q6_OP
Q6_CL
Q8_OP
Q8_CL
Q9_OP
Q9_CL
Q51_OP
Q51_CL
Q52_OP
Q52_CL
Q53_OP
Q53_CL
CQ0_OP
CQ0_CL
CQ51_OP
CQ51_CL
CQ52_OP
CQ52_CL
CQ62_OP
CQ62_CL
Q25_OP
Q25_CL
VOLT_OP
VOLT_CL
=1
VPQ0
VPQ2
VPQ6
VPQ8
VPQ9
VPQ51
VPQ52
VPQ53
VPCQ0
VPCQ51
VPCQ52
VPCQ62
VPQ25
VPVOLT
VPQ2
VPQ6
VPQ9
&
Q0CLREL
1
Q0CLITL
VPQ0
VPQ51
VPQ52
VPQ53
Q0_OP
Q51_OP
Q52_OP
Q53_OP
Q6EX1
&
≥1
Q6REL
1
Q6ITL
VPQ52
VPQ53
Q52_CL
Q53_CL
Q6EX2
&

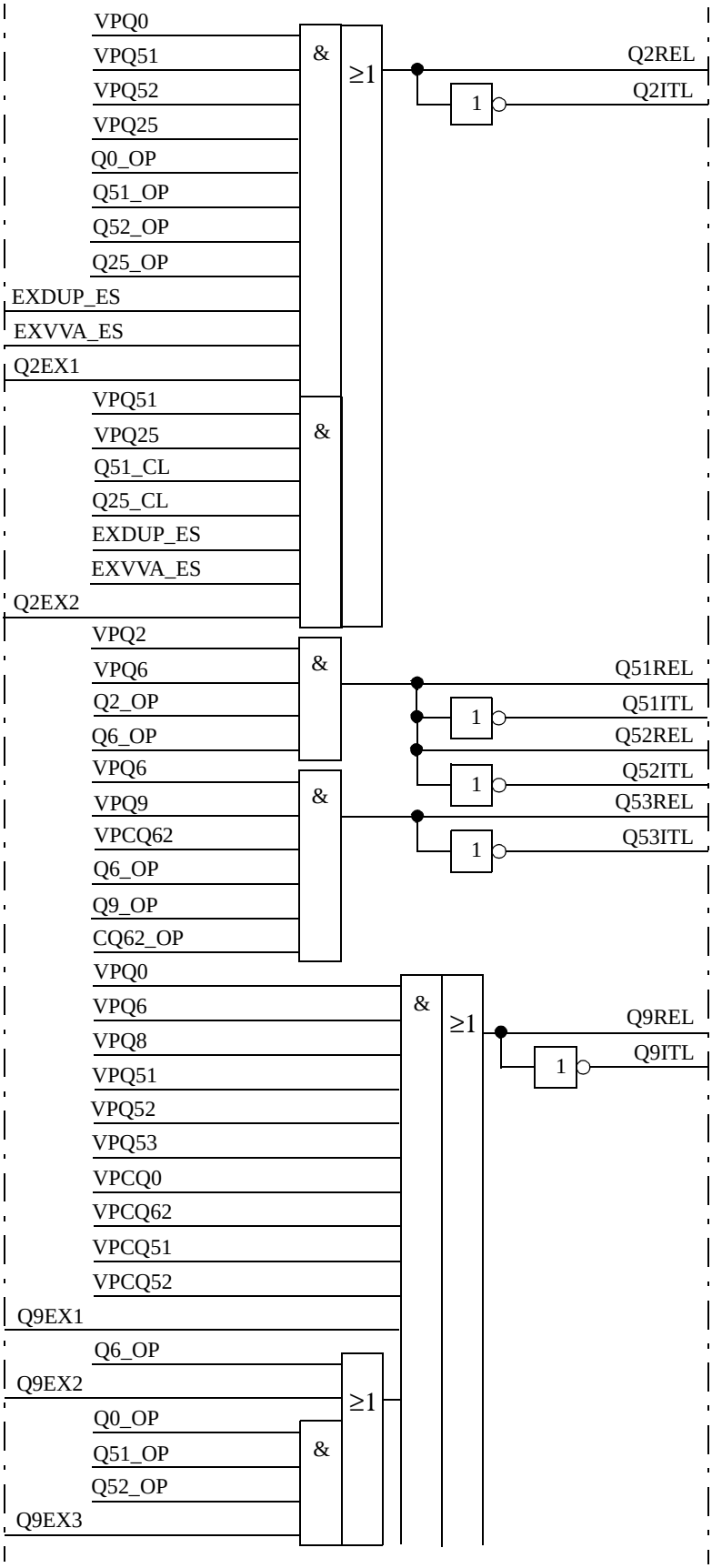
VPQ0
VPQ51
VPQ52
VPQ25
Q0_OP
Q51_OP
Q52_OP
Q25_OP
EXDUP_ES
EXVVA_ES
Q2EX1
&
≥1
Q2REL
1
Q2ITL
VPQ51
VPQ25
Q51_CL
Q25_CL
EXDUP_ES
EXVVA_ES
Q2EX2
&
VPQ2
VPQ6
Q2_OP
Q6_OP
&
Q51REL
1
Q51ITL
Q52REL
1
Q52ITL
VPQ6
VPQ9
VPCQ62
Q6_OP
Q9_OP
CQ62_OP
&
Q53REL
1
Q53ITL
VPQ0
VPQ6
VPQ8
VPQ51
VPQ52
VPQ53
VPCQ0
VPCQ62
VPCQ51
VPCQ52
Q9EX1
&
≥1
Q9REL
1
Q9ITL
Q6_OP
Q9EX2
Q0_OP
Q51_OP
Q52_OP
Q9EX3
&
≥1

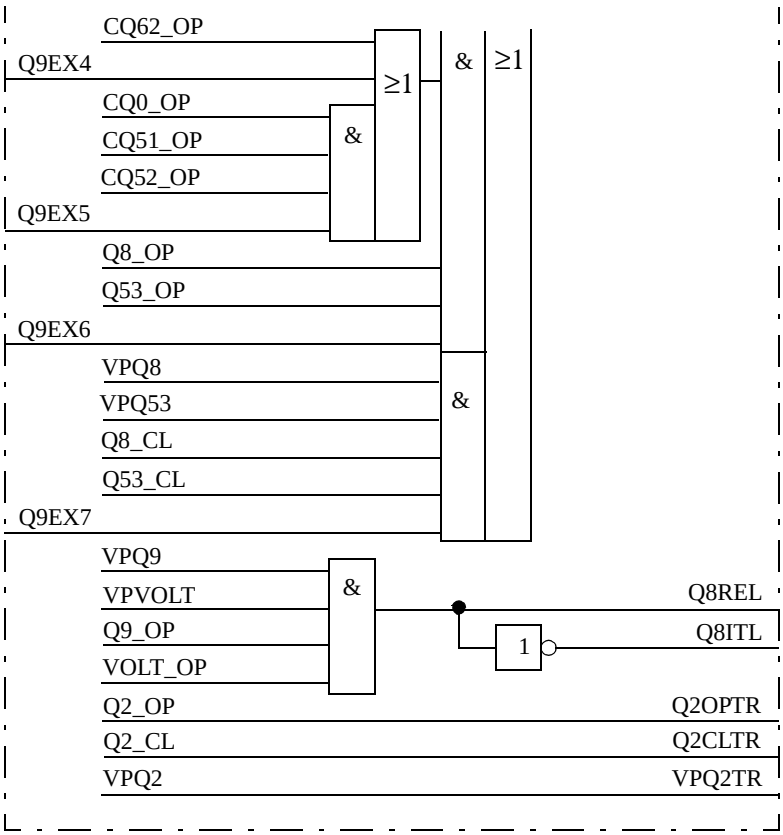

Figure 65: Function block diagram of BH_LINE_B

5.2 Signal lists

5.2.1 ABC_LINE

Table 1: Signal list for ABC_LINE

Signal	Type	In/out	Description
BC_AB_CL	BOOL	In	There exists a bus coupler connection between busbar A and B
BC_AC_CL	BOOL	In	There exists a bus coupler connection between busbar A and C
BC_AC_OP	BOOL	In	There is no bus coupler connection between busbar A and C
BC_BC_CL	BOOL	In	There exists a bus coupler connection between busbar B and C
BC_BC_OP	BOOL	In	There is no bus coupler connection between busbar B and C
C_DC_OP	BOOL	In	All line disconnectors on transfer busbar C except in the own bay are open
EXDU_BPB	BOOL	In	Signal is 1 if there is no transmission error from bay BPB
EXDUP_BC	BOOL	In	Signal is 1 if there is no transmission error from any bus coupler bay
EXDUP_ES	BOOL	In	Signal is 1 if there is no transmission error from any bay containing earthing switches Q15, Q25 or Q75
EXVV_BPB	BOOL	In	Signal is 1 if there is no transmission error from any bay containing disconnectors on transfer busbar C
EXVVA_BC	BOOL	In	Signal is 1 if the interlocking programs in all bus coupler bays are running
EXVVA_ES	BOOL	In	Signal is 1 if the interlocking programs in all bays containing earthing switches Q15, Q25 or Q75 are running
Q0_CL	BOOL	In	Signal is 1 if Q0 is closed
Q0_OP	BOOL	In	Signal is 1 if Q0 is open
Q1_CL	BOOL	In	Signal is 1 if Q1 is closed
Q1_OP	BOOL	In	Signal is 1 if Q1 is open
Q15_CL	BOOL	In	Signal is 1 if Q15 on busbar A is closed
Q15_OP	BOOL	In	Signal is 1 if Q15 on busbar A is open
Q1EX1	BOOL	In	Input for an external condition for apparatus Q1
Q1EX2	BOOL	In	Input for an external condition for apparatus Q1
Q1EX3	BOOL	In	Input for an external condition for apparatus Q1
Q2_CL	BOOL	In	Signal is 1 if Q2 is closed
Q2_OP	BOOL	In	Signal is 1 if Q2 is open
Q25_CL	BOOL	In	Signal is 1 if Q25 on busbar B is closed
Q25_OP	BOOL	In	Signal is 1 if Q25 on busbar B is open
Q2EX1	BOOL	In	Input for an external condition for apparatus Q2
Q2EX2	BOOL	In	Input for an external condition for apparatus Q2
Q2EX3	BOOL	In	Input for an external condition for apparatus Q2
Q51_CL	BOOL	In	Signal is 1 if Q51 is closed
Q51_OP	BOOL	In	Signal is 1 if Q51 is open
Q52_CL	BOOL	In	Signal is 1 if Q52 is closed
Q52_OP	BOOL	In	Signal is 1 if Q52 is open

Table 1: Signal list for ABC_LINE (Continued)

Signal	Type	In/out	Description
Q7_CL	BOOL	In	Signal is 1 if Q7 is closed
Q7_OP	BOOL	In	Signal is 1 if Q7 is open
Q75_CL	BOOL	In	Signal is 1 if Q75 on busbar C is closed
Q75_OP	BOOL	In	Signal is 1 if Q75 on busbar C is open
Q7EX1	BOOL	In	Input for an external condition for apparatus Q7
Q7EX2	BOOL	In	Input for an external condition for apparatus Q7
Q7EX3	BOOL	In	Input for an external condition for apparatus Q7
Q7EX4	BOOL	In	Input for an external condition for apparatus Q7
Q8_CL	BOOL	In	Signal is 1 if Q8 is closed
Q8_OP	BOOL	In	Signal is 1 if Q8 is open
Q9_CL	BOOL	In	Signal is 1 if Q9 is closed
Q9_OP	BOOL	In	Signal is 1 if Q9 is open
Q9EX1	BOOL	In	Input for an external condition for apparatus Q9
Q9EX2	BOOL	In	Input for an external condition for apparatus Q9
VOLT_CL	BOOL	In	There is voltage on the line or there is a VT (fuse) failure
VOLT_OP	BOOL	In	There is no voltage on the line and not fuse failure
VP_BC_AB	BOOL	In	Switch status of the bus coupler apparatuses connected between busbar A and B are valid (open or closed)
VP_BC_AC	BOOL	In	Switch status of the bus coupler apparatuses connected between busbar A and C are valid (open or closed)
VP_BC_BC	BOOL	In	Switch status of the bus coupler apparatuses connected between busbar B and C are valid (open or closed)
VP_C_DC	BOOL	In	Switch status of the disconnectors on transfer busbar C are valid (open or closed)
Q0CLITL	BOOL	Out	Closing of Q0 is forbidden
Q0CLREL	BOOL	Out	Closing of Q0 is allowed
Q1CLTR	BOOL	Out	Signal is 1 if Q1 is closed
Q1ITL	BOOL	Out	Switching of Q1 is forbidden
Q1OPTR	BOOL	Out	Signal is 1 if Q1 is open
Q1Q2CLTR	BOOL	Out	Signal is 1 if Q1 and Q2 are closed
Q1Q2OPTR	BOOL	Out	Signal is 1 if Q1 or Q2 or both are open
Q1REL	BOOL	Out	Switching of Q1 is allowed
Q2CLTR	BOOL	Out	Signal is 1 if Q2 is closed
Q2ITL	BOOL	Out	Switching of Q2 is forbidden
Q2OPTR	BOOL	Out	Signal is 1 if Q2 is open
Q2REL	BOOL	Out	Switching of Q2 is allowed
Q51ITL	BOOL	Out	Switching of Q51 is forbidden
Q51REL	BOOL	Out	Switching of Q51 is allowed
Q52ITL	BOOL	Out	Switching of Q52 is forbidden
Q52REL	BOOL	Out	Switching of Q52 is allowed
Q7CLTR	BOOL	Out	Signal is 1 if Q7 is closed

Table 1: Signal list for ABC_LINE (Continued)

Signal	Type	In/out	Description
Q7ITL	BOOL	Out	Switching of Q7 is forbidden
Q7OPTR	BOOL	Out	Signal is 1 if Q7 is open
Q7REL	BOOL	Out	Switching of Q7 is allowed
Q8ITL	BOOL	Out	Switching of Q8 is forbidden
Q8REL	BOOL	Out	Switching of Q8 is allowed
Q9ITL	BOOL	Out	Switching of Q9 is forbidden
Q9REL	BOOL	Out	Switching of Q9 is allowed
VPQ1Q2TR	BOOL	Out	Switch status of Q1 and Q2 are valid (open or closed)
VPQ1TR	BOOL	Out	Switch status of Q1 is valid (open or closed)
VPQ2TR	BOOL	Out	Switch status of Q2 is valid (open or closed)
VPQ7TR	BOOL	Out	Switch status of Q7 is valid (open or closed)

5.2.2 ABC_BC

Table 2: Signal list for ABC_BC

Signal	Type	In/out	Description
BBTR_OP	BOOL	In	Signal is 1 if no busbar transfer is in progress concerning this bus coupler
BC_AB_CL	BOOL	In	There exists a bus coupler connection between busbar A and B
EXDUP_AB	BOOL	In	Signal is 1 if there is no transmission error from any bay connected to the AB busbars
EXDUP_BC	BOOL	In	Signal is 1 if there is no transmission error from any bay connected to the BC busbars
EXDUP_ES	BOOL	In	Signal is 1 if there is no transmission error from any bay containing earthing switches Q15, Q25 or Q75
EXVVA_AB	BOOL	In	Signal is 1 if the interlocking programs in all bays connected to the AB busbars are running
EXVVA_BC	BOOL	In	Signal is 1 if the interlocking programs in all bays connected to the BC busbars are running
EXVVA_ES	BOOL	In	Signal is 1 if the interlocking programs in all bays containing earthing switches Q15, Q25 or Q75 are running
Q0_CL	BOOL	In	Signal is 1 if Q0 is closed
Q0_O_EX1	BOOL	In	Input for an external open condition for apparatus Q0
Q0_O_EX2	BOOL	In	Input for an external open condition for apparatus Q0
Q0_O_EX3	BOOL	In	Input for an external open condition for apparatus Q0
Q0_OP	BOOL	In	Signal is 1 if Q0 is open
Q1_CL	BOOL	In	Signal is 1 if Q1 is closed
Q1_OP	BOOL	In	Signal is 1 if Q1 is open
Q15_CL	BOOL	In	Signal is 1 if Q15 on busbar A is closed
Q15_OP	BOOL	In	Signal is 1 if Q15 on busbar A is open
Q1EX1	BOOL	In	Input for an external condition for apparatus Q1

Table 2: Signal list for ABC_BC (Continued)

Signal	Type	In/out	Description
Q1EX2	BOOL	In	Input for an external condition for apparatus Q1
Q1EX3	BOOL	In	Input for an external condition for apparatus Q1
Q2_CL	BOOL	In	Signal is 1 if Q2 is closed
Q2_OP	BOOL	In	Signal is 1 if Q2 is open
Q20_CL	BOOL	In	Signal is 1 if Q20 is closed
Q20_OP	BOOL	In	Signal is 1 if Q20 is open
Q20EX1	BOOL	In	Input for an external condition for apparatus Q20
Q20EX2	BOOL	In	Input for an external condition for apparatus Q20
Q20EX3	BOOL	In	Input for an external condition for apparatus Q20
Q25_CL	BOOL	In	Signal is 1 if Q25 on busbar B is closed
Q25_OP	BOOL	In	Signal is 1 if Q25 on busbar B is open
Q2EX1	BOOL	In	Input for an external condition for apparatus Q2
Q2EX2	BOOL	In	Input for an external condition for apparatus Q2
Q51_CL	BOOL	In	Signal is 1 if Q51 is closed
Q51_OP	BOOL	In	Signal is 1 if Q51 is open
Q52_CL	BOOL	In	Signal is 1 if Q52 is closed
Q52_OP	BOOL	In	Signal is 1 if Q52 is open
Q7_CL	BOOL	In	Signal is 1 if Q7 is closed
Q7_OP	BOOL	In	Signal is 1 if Q7 is open
Q75_CL	BOOL	In	Signal is 1 if Q75 on busbar C is closed
Q75_OP	BOOL	In	Signal is 1 if Q75 on busbar C is open
Q7EX1	BOOL	In	Input for an external condition for apparatus Q7
Q7EX2	BOOL	In	Input for an external condition for apparatus Q7
VP_BBTR	BOOL	In	Switch status are valid for all apparatuses involved in the busbar transfer
VP_BC_AB	BOOL	In	Switch status of the bus coupler apparatuses connected between busbar A and B are valid (open or closed)
BCABCLTR	BOOL	Out	Bus coupler connection via the own buscoupler between busbar A and B
BCABOPTR	BOOL	Out	No bus coupler connection via the own buscoupler between busbar A and B
BCACCLTR	BOOL	Out	Bus coupler connection via the own buscoupler between busbar A and C
BCACOPTR	BOOL	Out	No bus coupler connection via the own buscoupler between busbar A and C
BCBCCLTR	BOOL	Out	Bus coupler connection via the own buscoupler between busbar B and C
BCBCOPTR	BOOL	Out	No bus coupler connection via the own buscoupler between busbar B and C
Q0CLITL	BOOL	Out	Closing of Q0 is forbidden
Q0CLREL	BOOL	Out	Closing of Q0 is allowed
Q0OPITL	BOOL	Out	Opening of Q0 is forbidden

Table 2: Signal list for ABC_BC (Continued)

Signal	Type	In/out	Description
Q1EX2	BOOL	In	Input for an external condition for apparatus Q1
Q1EX3	BOOL	In	Input for an external condition for apparatus Q1
Q2_CL	BOOL	In	Signal is 1 if Q2 is closed
Q2_OP	BOOL	In	Signal is 1 if Q2 is open
Q20_CL	BOOL	In	Signal is 1 if Q20 is closed
Q20_OP	BOOL	In	Signal is 1 if Q20 is open
Q20EX1	BOOL	In	Input for an external condition for apparatus Q20
Q20EX2	BOOL	In	Input for an external condition for apparatus Q20
Q20EX3	BOOL	In	Input for an external condition for apparatus Q20
Q25_CL	BOOL	In	Signal is 1 if Q25 on busbar B is closed
Q25_OP	BOOL	In	Signal is 1 if Q25 on busbar B is open
Q2EX1	BOOL	In	Input for an external condition for apparatus Q2
Q2EX2	BOOL	In	Input for an external condition for apparatus Q2
Q51_CL	BOOL	In	Signal is 1 if Q51 is closed
Q51_OP	BOOL	In	Signal is 1 if Q51 is open
Q52_CL	BOOL	In	Signal is 1 if Q52 is closed
Q52_OP	BOOL	In	Signal is 1 if Q52 is open
Q7_CL	BOOL	In	Signal is 1 if Q7 is closed
Q7_OP	BOOL	In	Signal is 1 if Q7 is open
Q75_CL	BOOL	In	Signal is 1 if Q75 on busbar C is closed
Q75_OP	BOOL	In	Signal is 1 if Q75 on busbar C is open
Q7EX1	BOOL	In	Input for an external condition for apparatus Q7
Q7EX2	BOOL	In	Input for an external condition for apparatus Q7
VP_BBTR	BOOL	In	Switch status are valid for all apparatuses involved in the busbar transfer
VP_BC_AB	BOOL	In	Switch status of the bus coupler apparatuses connected between busbar A and B are valid (open or closed)
BCABCLTR	BOOL	Out	Bus coupler connection via the own buscoupler between busbar A and B
BCABOPTR	BOOL	Out	No bus coupler connection via the own buscoupler between busbar A and B
BCACCLTR	BOOL	Out	Bus coupler connection via the own buscoupler between busbar A and C
BCACOPTR	BOOL	Out	No bus coupler connection via the own buscoupler between busbar A and C
BCBCCLTR	BOOL	Out	Bus coupler connection via the own buscoupler between busbar B and C
BCBCOPTR	BOOL	Out	No bus coupler connection via the own buscoupler between busbar B and C
Q0CLITL	BOOL	Out	Closing of Q0 is forbidden
Q0CLREL	BOOL	Out	Closing of Q0 is allowed
Q0OPITL	BOOL	Out	Opening of Q0 is forbidden

Table 2: Signal list for ABC_BC (Continued)

Signal	Type	In/out	Description
Q0OPREL	BOOL	Out	Opening of Q0 is allowed
Q1CLTR	BOOL	Out	Signal is 1 if Q1 is closed
Q1ITL	BOOL	Out	Switching of Q1 is forbidden
Q1OPTR	BOOL	Out	Signal is 1 if Q1 is open
Q1Q20CLT	BOOL	Out	Signal is 1 if Q1 and Q20 are closed
Q1Q20OPT	BOOL	Out	Signal is 1 if Q1 or Q20 or both are open
Q1REL	BOOL	Out	Switching of Q1 is allowed
Q20CLTR	BOOL	Out	Signal is 1 if Q2 or Q20 or both are closed
Q20ITL	BOOL	Out	Switching of Q20 is forbidden
Q20OPTR	BOOL	Out	Signal is 1 if Q20 and Q2 are open
Q20REL	BOOL	Out	Switching of Q20 is allowed
Q2ITL	BOOL	Out	Switching of Q2 is forbidden
Q2REL	BOOL	Out	Switching of Q2 is allowed
Q51ITL	BOOL	Out	Switching of Q51 is forbidden
Q51REL	BOOL	Out	Switching of Q51 is allowed
Q52ITL	BOOL	Out	Switching of Q52 is forbidden
Q52REL	BOOL	Out	Switching of Q52 is allowed
Q7CLTR	BOOL	Out	Signal is 1 if Q7 is closed
Q7ITL	BOOL	Out	Switching of Q7 is forbidden
Q7OPTR	BOOL	Out	Signal is 1 if Q7 is open
Q7REL	BOOL	Out	Switching of Q7 is allowed
VPBCABTR	BOOL	Out	Switch status of the bus coupler apparatuses (Q0, Q1 and Q2) connected between busbar A and B are valid (open or closed)
VPBCACTR	BOOL	Out	Switch status of the bus coupler apparatuses (Q0, Q1 and Q7) connected between busbar A and C are valid (open or closed)
VPBCBCTR	BOOL	Out	Switch status of the bus coupler apparatuses (Q0, Q20 and Q7) connected between busbar B and C are valid (open or closed)
VPQ1Q20T	BOOL	Out	Switch status of Q1 and Q20 are valid (open or closed)
VPQ1TR	BOOL	Out	Switch status of Q1 is valid (open or closed)
VPQ20TR	BOOL	Out	Switch status of Q2 and Q20 are valid (open or closed)
VPQ7TR	BOOL	Out	Switch status of Q7 is valid (open or closed)

5.2.3 AB_TRAFO

Table 3: Signal list for AB_TRAFO

Signal	Type	In/out	Description
BC_AB_CL	BOOL	In	There exists a bus coupler connection between busbar A and B
EXDUP_BC	BOOL	In	Signal is 1 if there is no transmission error from any bus coupler bay
EXDUP_ES	BOOL	In	Signal is 1 if there is no transmission error from any bay containing earthing switches Q15 or Q25

Table 3: Signal list for AB_TRAFO (Continued)

Signal	Type	In/out	Description
EXVVA_BC	BOOL	In	Signal is 1 if the interlocking programs in all bus coupler bays are running
EXVVA_ES	BOOL	In	Signal is 1 if the interlocking programs in all bays containing earthing switches Q15 or Q25 are running
Q0_CL	BOOL	In	Signal is 1 if Q0 is closed
Q0_OP	BOOL	In	Signal is 1 if Q0 is open
Q0EX1	BOOL	In	Input for an external condition for apparatus Q0
Q0EX2	BOOL	In	Input for an external condition for apparatus Q0
Q0EX3	BOOL	In	Input for an external condition for apparatus Q0
Q1_CL	BOOL	In	Signal is 1 if Q1 is closed
Q1_OP	BOOL	In	Signal is 1 if Q1 is open
Q15_CL	BOOL	In	Signal is 1 if Q15 on busbar A is closed
Q15_OP	BOOL	In	Signal is 1 if Q15 on busbar A is open
Q1EX1	BOOL	In	Input for an external condition for apparatus Q1
Q1EX2	BOOL	In	Input for an external condition for apparatus Q1
Q1EX3	BOOL	In	Input for an external condition for apparatus Q1
Q2_CL	BOOL	In	Signal is 1 if Q2 is closed
Q2_OP	BOOL	In	Signal is 1 if Q2 is open
Q25_CL	BOOL	In	Signal is 1 if Q25 on busbar B is closed
Q25_OP	BOOL	In	Signal is 1 if Q25 on busbar B is open
Q2EX1	BOOL	In	Input for an external condition for apparatus Q2
Q2EX2	BOOL	In	Input for an external condition for apparatus Q2
Q2EX3	BOOL	In	Input for an external condition for apparatus Q2
Q51_CL	BOOL	In	Signal is 1 if Q51 is closed
Q51_OP	BOOL	In	Signal is 1 if Q51 is open
Q52_CL	BOOL	In	Signal is 1 if Q52 is closed
Q52_OP	BOOL	In	Signal is 1 if Q52 is open
TQ1_CL	BOOL	In	Signal is 1 if T_Q1 is closed
TQ1_OP	BOOL	In	Signal is 1 if T_Q1 is open
TQ2_CL	BOOL	In	Signal is 1 if T_Q2 is closed
TQ2_OP	BOOL	In	Signal is 1 if T_Q2 is open
TQ51_CL	BOOL	In	Signal is 1 if T_Q51 is closed
TQ51_OP	BOOL	In	Signal is 1 if T_Q51 is open
VP_BC_AB	BOOL	In	Switch status of the bus coupler apparatuses are valid (open or closed)
Q0CLITL	BOOL	Out	Closing of Q0 is forbidden
Q0CLREL	BOOL	Out	Closing of Q0 is allowed
Q1CLTR	BOOL	Out	Signal is 1 if Q1 is closed
Q1ITL	BOOL	Out	Switching of Q1 is forbidden
Q1OPTR	BOOL	Out	Signal is 1 if Q1 is open
Q1Q2CLTR	BOOL	Out	Signal is 1 if Q1 and Q2 are closed

Table 3: Signal list for AB_TRAFO (Continued)

Signal	Type	In/out	Description
Q1Q2OPTR	BOOL	Out	Signal is 1 if Q1,Q2 or both are open
Q1REL	BOOL	Out	Switching of Q1 is allowed
Q2CLTR	BOOL	Out	Signal is 1 if Q2 is closed
Q2ITL	BOOL	Out	Switching of Q2 is forbidden
Q2OPTR	BOOL	Out	Signal is 1 if Q2 is open
Q2REL	BOOL	Out	Switching of Q2 is allowed
Q51ITL	BOOL	Out	Switching of Q51 is forbidden
Q51REL	BOOL	Out	Switching of Q51 is allowed
Q52ITL	BOOL	Out	Switching of Q52 is forbidden
Q52REL	BOOL	Out	Switching of Q52 is allowed
VPQ1Q2TR	BOOL	Out	Switch status of Q1 and Q2 are valid (open or closed)
VPQ1TR	BOOL	Out	Switch status of Q1 is valid (open or closed)
VPQ2TR	BOOL	Out	Switch status of Q2 is valid (open or closed)

5.2.4 A1A2_BS

Table 4: Signal list for A1A2_BS

Signal	Type	In/out	Description
A1Q15_CL	BOOL	In	Signal is 1 if Q15 on busbar A1 is closed
A1Q15_OP	BOOL	In	Signal is 1 if Q15 on busbar A1 is open
A2Q15_CL	BOOL	In	Signal is 1 if Q15 on busbar A2 is closed
A2Q15_OP	BOOL	In	Signal is 1 if Q15 on busbar A2 is open
BBTR_OP	BOOL	In	No busbar transfer is going on concerning this bus section
EXDUP_AB	BOOL	In	Signal is 1 if there is no transmission error from any bay connected to the AB busbars
EXDUP_ES	BOOL	In	Signal is 1 if there is no transmission error from any bay containing earthing switches Q15 in section A1 and A2
EXVVA_AB	BOOL	In	Signal is 1 if the interlocking programs in all bays connected to the AB busbars are running
EXVVA_ES	BOOL	In	Signal is 1 if the interlocking programs in all bays containing earthing switches Q15 in section A1 and A2 are running
Q0_CL	BOOL	In	Signal is 1 if Q0 is closed
Q0_O_EX1	BOOL	In	Input for an external open condition for apparatus Q0
Q0_O_EX2	BOOL	In	Input for an external open condition for apparatus Q0
Q0_O_EX3	BOOL	In	Input for an external open condition for apparatus Q0
Q0_OP	BOOL	In	Signal is 1 if Q0 is open
Q11_CL	BOOL	In	Signal is 1 if Q11 is closed
Q11_OP	BOOL	In	Signal is 1 if Q11 is open
Q11EX1	BOOL	In	Input for an external condition for apparatus Q11
Q11EX2	BOOL	In	Input for an external condition for apparatus Q11

Table 4: Signal list for A1A2_BS (Continued)

Signal	Type	In/out	Description
Q12_CL	BOOL	In	Signal is 1 if Q12 is closed
Q12_OP	BOOL	In	Signal is 1 if Q12 is open
Q12EX1	BOOL	In	Input for an external condition for apparatus Q12
Q12EX2	BOOL	In	Input for an external condition for apparatus Q12
Q51_CL	BOOL	In	Signal is 1 if Q51 is closed
Q51_OP	BOOL	In	Signal is 1 if Q51 is open
Q52_CL	BOOL	In	Signal is 1 if Q52 is closed
Q52_OP	BOOL	In	Signal is 1 if Q52 is open
VP_BBTR	BOOL	In	Switch status are valid for all apparatuses involved in the bus-bar transfer
A1A2CLTR	BOOL	Out	Bus coupler connection between bus section A1 and A2
A1A2OPTR	BOOL	Out	No bus coupler connection between bus section A1 and A2
Q0CLITL	BOOL	Out	Closing of Q0 is forbidden
Q0CLREL	BOOL	Out	Closing of Q0 is allowed
Q0OPITL	BOOL	Out	Opening of Q0 is forbidden
Q0OPREL	BOOL	Out	Opening of Q0 is allowed
Q11CLTR	BOOL	Out	Signal is 1 if Q11 is closed
Q11ITL	BOOL	Out	Switching of Q11 is forbidden
Q11OPTR	BOOL	Out	Signal is 1 if Q11 is open
Q11REL	BOOL	Out	Switching of Q11 is allowed
Q12CLTR	BOOL	Out	Signal is 1 if Q12 is closed
Q12ITL	BOOL	Out	Switching of Q12 is forbidden
Q12OPTR	BOOL	Out	Signal is 1 if Q12 is open
Q12REL	BOOL	Out	Switching of Q12 is allowed
Q51ITL	BOOL	Out	Switching of Q51 is forbidden
Q51REL	BOOL	Out	Switching of Q51 is allowed
Q52ITL	BOOL	Out	Switching of Q52 is forbidden
Q52REL	BOOL	Out	Switching of Q52 is allowed
VPA1A2TR	BOOL	Out	Switch status of Q0, Q11 and Q12 are valid (open or closed)
VPQ11TR	BOOL	Out	Switch status of Q11 is valid (open or closed)
VPQ12TR	BOOL	Out	Switch status of Q12 is valid (open or closed)

5.2.5 A1A2_DC

Table 5: Signal list for A1A2_DC

Signal	Type	In/out	Description
A1DC_OP	BOOL	IN	Signal is 1 if all disconnectors on busbar A1 are open
A1Q15_CL	BOOL	IN	Signal is 1 if Q15 on busbar A1 is closed
A1Q15_OP	BOOL	IN	Signal is 1 if Q15 on busbar A1 is open
A2DC_OP	BOOL	IN	Signal is 1 if all disconnectors on busbar A2 are open

Table 5: Signal list for A1A2_DC (Continued)

Signal	Type	In/out	Description
A2Q15_CL	BOOL	In	Signal is 1 if Q15 on busbar A2 is closed
A2Q15_OP	BOOL	In	Signal is 1 if Q15 on busbar A2 is open
EXDUP_BB	BOOL	In	Signal is 1 if there is no transmission error from any bay containing disconnectors connected to the busbar sections A1 and A2
EXDUP_ES	BOOL	In	Signal is 1 if there is no transmission error from any bay containing earthing switches Q15 in section A1 and A2
EXVVA_BB	BOOL	In	Signal is 1 if the interlocking programs in all bays containing disconnectors connected to the busbar sections A1 and A2
EXVVA_ES	BOOL	In	Signal is 1 if the interlocking programs in all bays containing earthing switches Q15 in section A1 and A2 are running
Q11_CL	BOOL	In	Signal is 1 if Q11 is closed
Q11_OP	BOOL	In	Signal is 1 if Q11 is open
Q11C_EX1	BOOL	In	Input for an external close condition for apparatus Q11
Q11C_EX2	BOOL	In	Input for an external close condition for apparatus Q11
Q11O_EX1	BOOL	In	Input for an external open condition for apparatus Q11
Q11O_EX2	BOOL	In	Input for an external open condition for apparatus Q11
Q11O_EX3	BOOL	In	Input for an external open condition for apparatus Q11
VPA1_DC	BOOL	In	Switch status of disconnectors on busbar A1 are valid
VPA2_DC	BOOL	In	Switch status of disconnectors on busbar A2 are valid
DCCLTR	BOOL	Out	Signal is 1 if the bus section disconnector is closed
DCOPTR	BOOL	Out	Signal is 1 if the bus section disconnector is open
Q11CLITL	BOOL	Out	For GIS closing of Q11 is forbidden
Q11CLREL	BOOL	Out	For GIS closing of Q11 is allowed
Q11OPITL	BOOL	Out	Switching of Q11 is forbidden. For GIS opening of Q11 is forbidden
Q11OPREL	BOOL	Out	Switching of Q11 is allowed. For GIS opening of Q11 is allowed
VPDCTR	BOOL	Out	Switch status of Q11 is valid (open or closed)

5.2.6 BB_ES

Table 6: Signal list for BB_ES

Signal	Type	In/out	Description
ABCDC_OP	BOOL	In	Signal is 1 if all disconnectors on this busbar part are open
EXDUP_BB	BOOL	In	Signal is 1 if no transmission error from any bay containing all disconnectors on this busbar part
EXVVA_BB	BOOL	In	Signal is 1 if the interlocking programs in all bays containing all disconnectors on this busbar part are running
Q15_CL	BOOL	In	Signal is 1 if Q15 on this busbar part is closed
Q15_OP	BOOL	In	Signal is 1 if Q15 on this busbar part is open
VP_ABCDC	BOOL	In	The switch status of all disconnectors on this busbar part are valid.

Table 6: Signal list for BB_ES (Continued)

Signal	Type	In/out	Description
BBESCLTR	BOOL	Out	Signal is 1 if Q15 on this busbar part is closed
BBESOPTR	BOOL	Out	Signal is 1 if Q15 on this busbar part is open
Q15ITL	BOOL	Out	Switching of Q15 is forbidden
Q15REL	BOOL	Out	Switching of Q15 is allowed

5.2.7 DB_BUS_A

Table 7: Signal list for DB_BUS_A

Signal	Type	In/out	Description
EXDUP_ES	BOOL	In	Signal is 1 if there is no transmission error from any bay containing earthing switches Q15
EXVVA_ES	BOOL	In	Signal is 1 if the interlocking programs in all bays containing earthing switches Q15 are running
Q01_CL	BOOL	In	Signal is 1 if Q01 is closed
Q01_OP	BOOL	In	Signal is 1 if Q01 is open
Q1_CL	BOOL	In	Signal is 1 if Q1 is closed
Q1_OP	BOOL	In	Signal is 1 if Q1 is open
Q15_CL	BOOL	In	Signal is 1 if Q15 on busbar A is closed
Q15_OP	BOOL	In	Signal is 1 if Q15 on busbar A is open
Q1EX1	BOOL	In	Input for an external condition for apparatus Q1
Q1EX2	BOOL	In	Input for an external condition for apparatus Q1
Q51_CL	BOOL	In	Signal is 1 if Q51 is closed
Q51_OP	BOOL	In	Signal is 1 if Q51 is open
Q52_CL	BOOL	In	Signal is 1 if Q52 is closed
Q52_OP	BOOL	In	Signal is 1 if Q52 is open
Q53_CL	BOOL	In	Signal is 1 if Q53 is closed
Q53_OP	BOOL	In	Signal is 1 if Q53 is open
Q61_CL	BOOL	In	Signal is 1 if Q61 is closed
Q61_OP	BOOL	In	Signal is 1 if Q61 is open
Q61EX1	BOOL	In	Input for an external condition for apparatus Q61
Q61EX2	BOOL	In	Input for an external condition for apparatus Q61
Q01CLITL	BOOL	Out	Closing of Q01 is forbidden
Q01CLREL	BOOL	Out	Closing of Q01 is allowed
Q1CLTR	BOOL	Out	Signal is 1 if Q1 is closed
Q1ITL	BOOL	Out	Switching of Q1 is forbidden
Q1OPTR	BOOL	Out	Signal is 1 if Q1 is open
Q1REL	BOOL	Out	Switching of Q1 is allowed
Q51ITL	BOOL	Out	Switching of Q51 is forbidden
Q51REL	BOOL	Out	Switching of Q51 is allowed
Q52ITL	BOOL	Out	Switching of Q52 is forbidden

Table 7: Signal list for DB_BUS_A (Continued)

Signal	Type	In/out	Description
Q52REL	BOOL	Out	Switching of Q52 is allowed
Q61ITL	BOOL	Out	Switching of Q61 is forbidden
Q61REL	BOOL	Out	Switching of Q61 is allowed
VPQ1TR	BOOL	Out	Switch status of Q1 is valid (open or closed)

5.2.8 DB_LINE

Table 8: Signal list for DB_LINE

Signal	Type	In/out	Description
Q01_CL	BOOL	In	Signal is 1 if Q01 is closed
Q01_OP	BOOL	In	Signal is 1 if Q01 is open
Q02_CL	BOOL	In	Signal is 1 if Q02 is closed
Q02_OP	BOOL	In	Signal is 1 if Q02 is open
Q51_CL	BOOL	In	Signal is 1 if Q51 is closed
Q51_OP	BOOL	In	Signal is 1 if Q51 is open
Q52_CL	BOOL	In	Signal is 1 if Q52 is closed
Q52_OP	BOOL	In	Signal is 1 if Q52 is open
Q53_CL	BOOL	In	Signal is 1 if Q53 is closed
Q53_OP	BOOL	In	Signal is 1 if Q53 is open
Q54_CL	BOOL	In	Signal is 1 if Q54 is closed
Q54_OP	BOOL	In	Signal is 1 if Q54 is open
Q55_CL	BOOL	In	Signal is 1 if Q55 is closed
Q55_OP	BOOL	In	Signal is 1 if Q55 is open
Q61_CL	BOOL	In	Signal is 1 if Q61 is closed
Q61_OP	BOOL	In	Signal is 1 if Q61 is open
Q62_CL	BOOL	In	Signal is 1 if Q62 is closed
Q62_OP	BOOL	In	Signal is 1 if Q62 is open
Q8_CL	BOOL	In	Signal is 1 if Q8 is closed
Q8_OP	BOOL	In	Signal is 1 if Q8 is open
Q9_CL	BOOL	In	Signal is 1 if Q9 is closed
Q9_OP	BOOL	In	Signal is 1 if Q9 is open
Q9EX1	BOOL	In	Input for an external condition for apparatus Q9
Q9EX2	BOOL	In	Input for an external condition for apparatus Q9
Q9EX3	BOOL	In	Input for an external condition for apparatus Q9
Q9EX4	BOOL	In	Input for an external condition for apparatus Q9
Q9EX5	BOOL	In	Input for an external condition for apparatus Q9
VOLT_CL	BOOL	In	There is voltage on the line or a VT (fuse) failure
VOLT_OP	BOOL	In	There is no voltage on the line and no fuse failure
Q53ITL	BOOL	Out	Switching of Q53 is forbidden

Table 8: Signal list for DB_LINE (Continued)

Signal	Type	In/out	Description
Q53REL	BOOL	Out	Switching of Q53 is allowed
Q8ITL	BOOL	Out	Switching of Q8 is forbidden
Q8REL	BOOL	Out	Switching of Q8 is allowed
Q9ITL	BOOL	Out	Switching of Q9 is forbidden
Q9REL	BOOL	Out	Switching of Q9 is allowed

5.2.9 DB_BUS_B

Table 9: Signal list for DB_BUS_B

Signal	Type	In/out	Description
EXDUP_ES	BOOL	In	Signal is 1 if there is no transmission error from any bay containing earthing switches Q25
EXVVA_ES	BOOL	In	Signal is 1 if the interlocking programs in all bays containing earthing switches Q25 are running
Q02_CL	BOOL	In	Signal is 1 if Q02 is closed
Q02_OP	BOOL	In	Signal is 1 if Q02 is open
Q2_CL	BOOL	In	Signal is 1 if Q2 is closed
Q2_OP	BOOL	In	Signal is 1 if Q2 is open
Q25_CL	BOOL	In	Signal is 1 if Q25 on busbar A is closed
Q25_OP	BOOL	In	Signal is 1 if Q25 on busbar A is open
Q2EX1	BOOL	In	Input for an external condition for apparatus Q2
Q2EX2	BOOL	In	Input for an external condition for apparatus Q2
Q53_CL	BOOL	In	Signal is 1 if Q53 on busbar A is closed
Q53_OP	BOOL	In	Signal is 1 if Q53 on busbar A is open
Q54_CL	BOOL	In	Signal is 1 if Q54 is closed
Q54_OP	BOOL	In	Signal is 1 if Q54 is open
Q55_CL	BOOL	In	Signal is 1 if Q55 is closed
Q55_OP	BOOL	In	Signal is 1 if Q55 is open
Q62_CL	BOOL	In	Signal is 1 if Q62 is closed
Q62_OP	BOOL	In	Signal is 1 if Q62 is open
Q62EX1	BOOL	In	Input for an external condition for apparatus Q62
Q62EX2	BOOL	In	Input for an external condition for apparatus Q62
Q02CLITL	BOOL	Out	Closing of Q02 is forbidden
Q02CLREL	BOOL	Out	Closing of Q02 is allowed
Q2CLTR	BOOL	Out	Signal is 1 if Q2 is closed
Q2ITL	BOOL	Out	Switching of Q2 is forbidden
Q2OPTR	BOOL	Out	Signal is 1 if Q2 is open
Q2REL	BOOL	Out	Switching of Q2 is allowed
Q54ITL	BOOL	Out	Switching of Q54 is forbidden
Q54REL	BOOL	Out	Switching of Q54 is allowed

Table 9: Signal list for DB_BUS_B (Continued)

Signal	Type	In/out	Description
Q55ITL	BOOL	Out	Switching of Q55 is forbidden
Q55REL	BOOL	Out	Switching of Q55 is allowed
Q62ITL	BOOL	Out	Switching of Q62 is forbidden
Q62REL	BOOL	Out	Switching of Q62 is allowed
VPQ2TR	BOOL	Out	Switch status of Q2 is valid (open or closed)

5.2.10 BH_LINE_A

Table 10: Signal list for BH_LINE_A

Signal	Type	In/out	Description
CQ0_CL	BOOL	In	Signal is 1 if Q0 in module BH_CONN is open
CQ0_OP	BOOL	In	Signal is 1 if Q0 in module BH_CONN is open
CQ51_CL	BOOL	In	Signal is 1 if Q51 in module BH_CONN is closed
CQ51_OP	BOOL	In	Signal is 1 if Q51 in module BH_CONN is open
CQ52_CL	BOOL	In	Signal is 1 if Q52 in module BH_CONN is closed
CQ52_OP	BOOL	In	Signal is 1 if Q52 in module BH_CONN is open
CQ61_CL	BOOL	In	Signal is 1 if Q61 in module BH_CONN is closed
CQ61_OP	BOOL	In	Signal is 1 if Q61 in module BH_CONN is open
EXDUP_ES	BOOL	In	Signal is 1 if there is no transmission error from any bay containing earthing switches Q15
EXVVA_ES	BOOL	In	Signal is 1 if the interlocking programs in all bays containing earthing switches Q15
Q0_CL	BOOL	In	Signal is 1 if Q0 is closed
Q0_OP	BOOL	In	Signal is 1 if Q0 is open
Q1_CL	BOOL	In	Signal is 1 if Q1 is closed
Q1_OP	BOOL	In	Signal is 1 if Q1 is open
Q15_CL	BOOL	In	Signal is 1 if Q15 on busbar A is closed
Q15_OP	BOOL	In	Signal is 1 if Q15 on busbar A is open
Q1EX1	BOOL	In	Input for an external condition for apparatus Q1
Q1EX2	BOOL	In	Input for an external condition for apparatus Q1
Q51_CL	BOOL	In	Signal is 1 if Q51 is closed
Q51_OP	BOOL	In	Signal is 1 if Q51 is open
Q52_CL	BOOL	In	Signal is 1 if Q52 is closed
Q52_OP	BOOL	In	Signal is 1 if Q52 is open
Q53_CL	BOOL	In	Signal is 1 if Q53 is closed
Q53_OP	BOOL	In	Signal is 1 if Q53 is open
Q6_CL	BOOL	In	Signal is 1 if Q6 is closed
Q6_OP	BOOL	In	Signal is 1 if Q6 is open
Q6EX1	BOOL	In	Input for an external condition for apparatus Q6
Q6EX2	BOOL	In	Input for an external condition for apparatus Q6

Table 10: Signal list for BH_LINE_A (Continued)

Signal	Type	In/out	Description
Q8_CL	BOOL	In	Signal is 1 if Q8 is closed
Q8_OP	BOOL	In	Signal is 1 if Q8 is open
Q9_CL	BOOL	In	Signal is 1 if Q9 is closed
Q9_OP	BOOL	In	Signal is 1 if Q9 is open
Q9EX1	BOOL	In	Input for an external condition for apparatus Q9
Q9EX2	BOOL	In	Input for an external condition for apparatus Q9
Q9EX3	BOOL	In	Input for an external condition for apparatus Q9
Q9EX4	BOOL	In	Input for an external condition for apparatus Q9
Q9EX5	BOOL	In	Input for an external condition for apparatus Q9
Q9EX6	BOOL	In	Input for an external condition for apparatus Q9
Q9EX7	BOOL	In	Input for an external condition for apparatus Q9
VOLT_CL	BOOL	In	There is voltage on the line or there is a VT (fuse) failure
VOLT_OP	BOOL	In	There is no voltage on the line and not fuse failure
Q0CLITL	BOOL	Out	Closing of Q0 is forbidden
Q0CLREL	BOOL	Out	Closing of Q0 is allowed
Q1CLTR	BOOL	Out	Signal is 1 if Q1 is closed
Q1ITL	BOOL	Out	Switching of Q1 is forbidden
Q1OPTR	BOOL	Out	Signal is 1 if Q1 is open
Q1REL	BOOL	Out	Switching of Q1 is allowed
Q51ITL	BOOL	Out	Switching of Q51 is forbidden
Q51REL	BOOL	Out	Switching of Q51 is allowed
Q52ITL	BOOL	Out	Switching of Q52 is forbidden
Q52REL	BOOL	Out	Switching of Q52 is allowed
Q53ITL	BOOL	Out	Switching of Q53 is forbidden
Q53REL	BOOL	Out	Switching of Q53 is allowed
Q6ITL	BOOL	Out	Switching of Q6 is forbidden
Q6REL	BOOL	Out	Switching of Q6 is allowed
Q8ITL	BOOL	Out	Switching of Q8 is forbidden
Q8REL	BOOL	Out	Switching of Q8 is allowed
Q9ITL	BOOL	Out	Switching of Q9 is forbidden
Q9REL	BOOL	Out	Switching of Q9 is allowed
VPQ1TR	BOOL	Out	Switch status of Q1 is valid (open or closed)

5.2.11 BH_CONN

Table 11: Signal list for BH_CONN

Signal	Type	In/out	Description
AQ53_CL	BOOL	In	Signal is 1 if Q53 on line 1 is closed
AQ53_OP	BOOL	In	Signal is 1 if Q53 on line 1 is open
BQ53_CL	BOOL	In	Signal is 1 if Q53 on line 2 is closed

Table 11: Signal list for BH_CONN (Continued)

Signal	Type	In/out	Description
BQ53_OP	BOOL	In	Signal is 1 if Q53 on line 2 is open
Q0_CL	BOOL	In	Signal is 1 if Q0 is closed
Q0_OP	BOOL	In	Signal is 1 if Q0 is open
Q51_CL	BOOL	In	Signal is 1 if Q51 is closed
Q51_OP	BOOL	In	Signal is 1 if Q51 is open
Q52_CL	BOOL	In	Signal is 1 if Q52 is closed
Q52_OP	BOOL	In	Signal is 1 if Q52 is open
Q61_CL	BOOL	In	Signal is 1 if Q61 is closed
Q61_OP	BOOL	In	Signal is 1 if Q61 is open
Q61EX1	BOOL	In	Input for an external condition for apparatus Q61
Q61EX2	BOOL	In	Input for an external condition for apparatus Q61
Q62_CL	BOOL	In	Signal is 1 if Q62 is closed
Q62_OP	BOOL	In	Signal is 1 if Q62 is open
Q62EX1	BOOL	In	Input for an external condition for apparatus Q62
Q62EX2	BOOL	In	Input for an external condition for apparatus Q62
Q0CLITL	BOOL	Out	Closing of Q0 is forbidden
Q0CLREL	BOOL	Out	Closing of Q0 is allowed
Q51ITL	BOOL	Out	Switching of Q51 is forbidden
Q51REL	BOOL	Out	Switching of Q51 is allowed
Q52ITL	BOOL	Out	Switching of Q52 is forbidden
Q52REL	BOOL	Out	Switching of Q52 is allowed
Q61ITL	BOOL	Out	Switching of Q61 is forbidden
Q61REL	BOOL	Out	Switching of Q61 is allowed
Q62ITL	BOOL	Out	Switching of Q62 is forbidden
Q62REL	BOOL	Out	Switching of Q62 is allowed

5.2.12 BH_LINE_B

Table 12: Signal list for BH_LINE_B

Signal	Type	In/out	Description
CQ0_CL	BOOL	In	Signal is 1 if Q0 in module BH_CONN is closed
CQ0_OP	BOOL	In	Signal is 1 if Q0 in module BH_CONN is open
CQ51_CL	BOOL	In	Signal is 1 if Q51 in module BH_CONN is closed
CQ51_OP	BOOL	In	Signal is 1 if Q51 in module BH_CONN is open
CQ52_CL	BOOL	In	Signal is 1 if Q52 in module BH_CONN is closed
CQ52_OP	BOOL	In	Signal is 1 if Q52 in module BH_CONN is open
CQ62_CL	BOOL	In	Signal is 1 if Q62 in module BH_CONN is closed
CQ62_OP	BOOL	In	Signal is 1 if Q62 in module BH_CONN is open
EXDUP_ES	BOOL	In	Signal is 1 if there is no transmission error from any bay containing earthing switches Q25

Table 12: Signal list for BH_LINE_B (Continued)

Signal	Type	In/out	Description
EXVVA_ES	BOOL	In	Signal is 1 if the interlocking programs in all bays containing earthing switches Q25
Q0_CL	BOOL	In	Signal is 1 if Q0 is closed
Q0_OP	BOOL	In	Signal is 1 if Q0 is open
Q2_CL	BOOL	In	Signal is 1 if Q2 is closed
Q2_OP	BOOL	In	Signal is 1 if Q2 is open
Q25_CL	BOOL	In	Signal is 1 if Q25 on busbar B is closed
Q25_OP	BOOL	In	Signal is 1 if Q25 on busbar B is open
Q2EX1	BOOL	In	Input for an external condition for apparatus Q2
Q2EX2	BOOL	In	Input for an external condition for apparatus Q2
Q51_CL	BOOL	In	Signal is 1 if Q51 is closed
Q51_OP	BOOL	In	Signal is 1 if Q51 is open
Q52_CL	BOOL	In	Signal is 1 if Q52 is closed
Q52_OP	BOOL	In	Signal is 1 if Q52 is open
Q53_CL	BOOL	In	Signal is 1 if Q53 is closed
Q53_OP	BOOL	In	Signal is 1 if Q53 is open
Q6_CL	BOOL	In	Signal is 1 if Q6 is closed
Q6_OP	BOOL	In	Signal is 1 if Q6 is open
Q6EX1	BOOL	In	Input for an external condition for apparatus Q6
Q6EX2	BOOL	In	Input for an external condition for apparatus Q6
Q8_CL	BOOL	In	Signal is 1 if Q8 is closed
Q8_OP	BOOL	In	Signal is 1 if Q8 is open
Q9_CL	BOOL	In	Signal is 1 if Q9 is closed
Q9_OP	BOOL	In	Signal is 1 if Q9 is open
Q9EX1	BOOL	In	Input for an external condition for apparatus Q9
Q9EX2	BOOL	In	Input for an external condition for apparatus Q9
Q9EX3	BOOL	In	Input for an external condition for apparatus Q9
Q9EX4	BOOL	In	Input for an external condition for apparatus Q9
Q9EX5	BOOL	In	Input for an external condition for apparatus Q9
Q9EX6	BOOL	In	Input for an external condition for apparatus Q9
Q9EX7	BOOL	In	Input for an external condition for apparatus Q9
VOLT_CL	BOOL	In	There is voltage on the line or there is a VT (fuse) failure
VOLT_OP	BOOL	In	There is no voltage on the line and not fuse failure
Q0CLITL	BOOL	Out	Closing of Q0 is forbidden
Q0CLREL	BOOL	Out	Closing of Q0 is allowed
Q2CLTR	BOOL	Out	Signal is 1 if Q2 is closed
Q2ITL	BOOL	Out	Switching of Q2 is forbidden
Q2OPTR	BOOL	Out	Signal is 1 if Q2 is open
Q2REL	BOOL	Out	Switching of Q2 is allowed
Q51ITL	BOOL	Out	Switching of Q51 is forbidden
Q51REL	BOOL	Out	Switching of Q51 is allowed

Table 12: Signal list for BH_LINE_B (Continued)

Signal	Type	In/out	Description
Q52ITL	BOOL	Out	Switching of Q52 is forbidden
Q52REL	BOOL	Out	Switching of Q52 is allowed
Q53ITL	BOOL	Out	Switching of Q53 is forbidden
Q53REL	BOOL	Out	Switching of Q53 is allowed
Q6ITL	BOOL	Out	Switching of Q6 is forbidden
Q6REL	BOOL	Out	Switching of Q6 is allowed
Q8ITL	BOOL	Out	Switching of Q8 is forbidden
Q8REL	BOOL	Out	Switching of Q8 is allowed
Q9ITL	BOOL	Out	Switching of Q9 is forbidden
Q9REL	BOOL	Out	Switching of Q9 is allowed
VPQ2TR	BOOL	Out	Switch status of Q2 is valid (open or closed)

1 Application

The transformer voltage control function provides voltage control for on-load tap changers for up to six transformers in parallel operation. The single transformer control module is used for the control of a single transformer. For parallel operation one single transformer control module and one parallel transformer control module are used for each transformer. The transformer voltage control function has the following main features:

- Adjustable inverse time characteristic.
- Constant time characteristic.
- Single or parallel transformer operation mode.
- Parallel operation based on minimum reactive power circulation.
- Tap changer supervision.
- Overvoltage blocking.
- Undervoltage blocking.
- Overvoltage detection and fast step down mode.
- Undervoltage detection and fast step up mode.

The transformer voltage controller serves for automatic control of transformers with a motor driven on-load tap changer. The control follows the step-by-step principle, i.e. a single control pulse operates the tap changer from one service position to the next. Motor drive units without step-by-step function require a continuous control pulse, which is also available. In both cases the **Raise** or **Lower** control signals are generated by the transformer voltage controller and issued to the motor drive whenever the measured voltage deviates from preset conditions.

2 Theory of operation

The time delay from the detection of a deviation, between the selected voltage setpoint and the measured busbar voltage, to the output of the control pulse depends on the magnitude of the deviation and corresponds to an inverse time characteristic; the time delay is shorter for larger deviations. The inverse time characteristic is illustrated in figure 1, where the small voltage deviation corresponds to a long time delay, t1, while the large voltage deviation results in a short delay, t2.

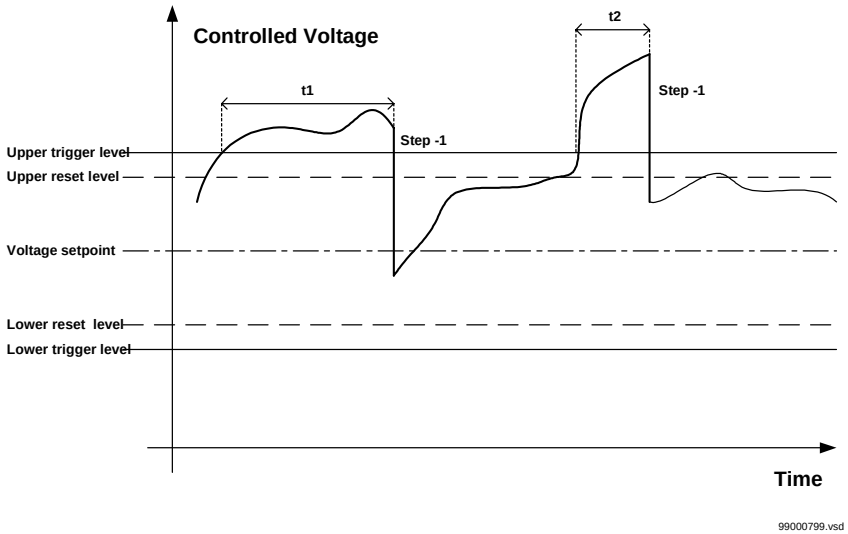

Figure 1: Controlled voltage as a function of time, for inverse time characteristic

The inverse time characteristic can be modified by three parameters, according to figure 2:

a) *U_sensitivity*, depending on the size of the taps.
U_sensitivity is equal to
(upper trigger level) - (voltage setpoint) and
(voltage setpoint) - (lower trigger level)

b) *Maximum delay time*, t_{max}, between the detection of the lowest unacceptable voltage deviation and the control command to the tap changer, in case of a deviation of 1 x U_sensitivity.

c) *Minimum delay time*, t_{15}, in case of a deviation of 15 x U_sensitivity.

In figure 2 the command output delay time t_d is plotted against the control deviation, du, where

$$du = \frac{|U_{setpoint} - U_{actual}|}{U_{sensitivity}} \qquad \text{(Equation 1)}$$

The reset ratio (Upper reset level)/(Upper trigger level) = 1.00, is a fixed not setable value.

FSDL is the Fast Step Down Limit (see section 3.5 and 3.6). If the control deviation is larger than FSDL, the delay will be set to t_{fsd}. If the controller is in parallel operation mode, the minimum circulating current criteria (see section 3.2) creates a voltage correction term that is added to the actual voltage, that is:

$$U_{actual} = U_{measured} + U_{correction} \qquad \text{(Equation 2)}$$

The characteristic is shown for three different time settings in figure 2 for different values of constant voltage deviation. If the voltage deviation, after the trigger level is hit, is not constant, the time delay will correspond to the time-integral of the voltage deviation. If the voltage is still outside the dead-band, after a raise/lower command the timer is reset and the process starts all over again.

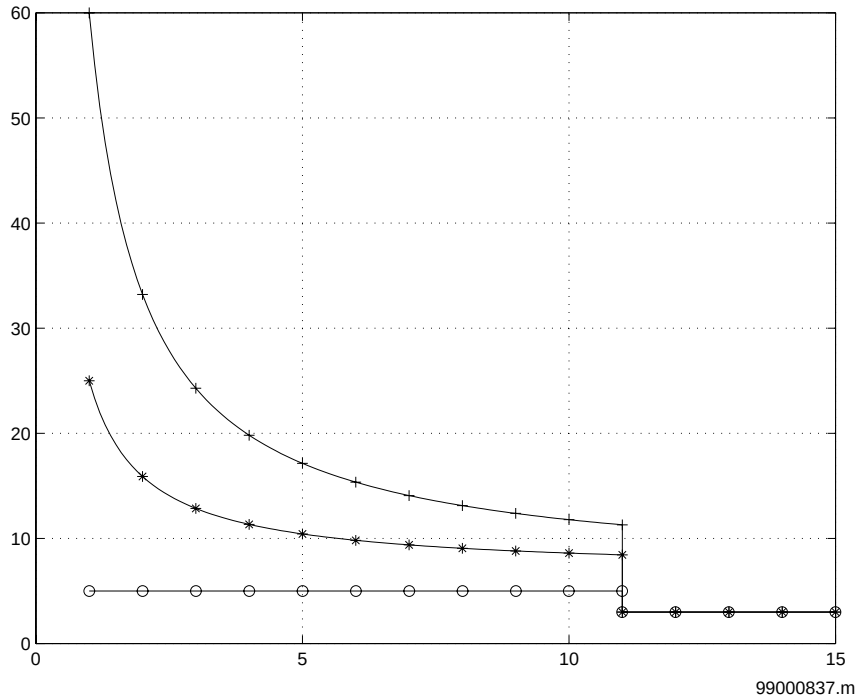

Figure 2: Inverse time characteristic for the transformer voltage controller function.

In parallel mode of operation (see section 3.2) each regulator calculates the circulating reactive currents between the transformers. These reactive currents cause additional reactive loads in the transformers and therefore-they have to be minimised. The currents are used to calculate a signed influencing quantity added to the measured busbar voltage in order to minimise the voltage deviation as well as the circulating currents. At each transformer bay the reactive power Qi is measured. At each node the ratio of the sums of the reactive power values, Qi, and the rated transformer power, SNi, are calculated to yield a reference value for the distribution of the reactive power among the parallel power transformers:

$$\frac{Q}{S_N} = \frac{\sum_{i=1}^{k} Q_i}{\sum_{i=1}^{k} S_{Ni}} \qquad \text{(Equation 3)}$$

where k is the number of transformers in parallel operation.

The condition for each power transformer to fulfil is that the ratio Q_i/S_{Ni} is as close as possible to the reference value Q/S_N. Therefore, the deviation from the optimal reactive power of each transformer is described by

$$\Delta Q_i = Q_i - \left(\frac{Q}{S_N} \cdot S_{Ni}\right) \qquad \text{(Equation 4)}$$

The deviation of the reactive power ΔQ_i is related to the deviation of the imaginary part of the current according to

$$\Delta(\mathrm{Im}\{I_i\}) = \frac{\Delta Q_i}{U_B} \qquad \text{(Equation 5)}$$

where U_B is the actual phase busbar voltage.

The deviation of the imaginary part of the current $\Delta(\mathrm{Im}\{I_i\})$ is converted into a correction of the measured busbar voltage U_{Bi}, which is the measured value of the busbar voltage at node i. The busbar voltage correction is added to the measured busbar voltage U_{Bi}, to obtain the compensated busbar voltage U_{BCi}, as input for the Single Tap Changer Control module, which treats it as an ordinary measured value of the busbar voltage.

The busbar corrections are finally obtained from expressions involving no-load (NL) voltages. The general expression reads

$$\Delta U_{NLi} = C_i \cdot \Delta(\mathrm{Im}\{I_i\}) \cdot Z_i \cdot \frac{\Sigma(1/Z_m)}{(\Sigma(1/Z_m) - 1/Z_i)} \qquad \text{(Equation 6)}$$

The factor C_i is a compensation parameter, which is usually set to 1, and m is a summation index m=[1,k].

To operate the controller in a “constant time delay” mode, the two parameters for the minimum delay time (t_{15}) and the maximum delay time (t_{max}) have to be given the same value; equal to the desired time delay. The principle way of operation is shown in figure 3.

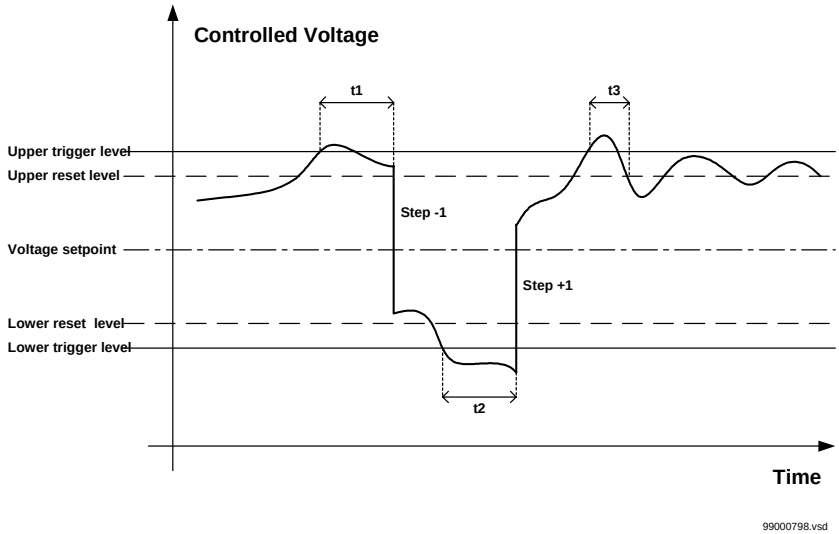

Figure 3: Controlled voltage as a function of time, for constant time delay.

In figure 3, the parameters have been chosen to achieve a constant time delay, irrespective of the voltage deviation. When a trigger level is hit (upper or lower) a timer is started. If the reset level is reached before the timer has ran out the timer is reset and no tap changer operation is performed. The time t3, in figure 3, is shorter than the chosen delay time, which is equal to t1 and t2. If the voltage level not hits the reset level, within the delay time, a tap changer operation command will be sent.

3 Design

The regulator can be used for a single transformer tap changer as well as for up to six transformers in parallel, equipped with tap changers. Minimum circulating reactive power is used as the criterion for the parallel mode operation.

3.1 Control modes

The control mode can be AUTOMATIC or MANUAL. The actual control mode is indicated at the local control panel and sent to the station HMI (Human Machine Interface) as well as to the master station.

In the control mode AUTOMATIC the regulator operates the tap changer of the corresponding power transformer by single control pulses **Raise** or **Lower** in order to keep the voltage of the controlled busbar section inside a specified limited range.

In the control mode AUTOMATIC the operator can not control the tap changer by manual **Raise** or **Lower** commands.

In the control mode MANUAL the operator can control the tap changer by single **Raise** or **Lower** commands from every operator level according to the authorities ‘Local’, ‘Station’ and ‘Remote’. The commands are processed by the regulator and forwarded to the tap changer by single control pulses as in the AUTOMATIC mode. The regulator itself generates no control commands in case of an unacceptable voltage deviation.

3.2 Operation modes

If only one transformer is connected to a MV busbar section the corresponding regulator is in SINGLE operation mode. In this mode the regulator operates only on the MV busbar voltage irrespective of another regulator according to the functionality described above.

In case two or more transformers are connected to MV busbar segments being interconnected by sectionalizer bays every affected regulator is in PARALLEL operation mode. In this mode each regulator calculates the circulating reactive currents between the transformers.

In parallel operation up to six transformers can be controlled at the same time.

In order to guarantee minimisation of circulating currents all regulators operating together in PARALLEL mode must have the same voltage setpoint.

If one of the regulators in PARALLEL operation mode is in MANUAL control mode and the other regulators are in AUTOMATIC control mode the regulator in MANUAL mode becomes the *Master* and the other regulators become *Followers*. In this special case the Followers only minimise the circulating currents between their own transformer and the Master’s transformer without regarding the voltage deviation. It is only permitted

to have one Master in a group of regulators operating in PARALLEL mode. If this constraint is disregarded, any regulator set to AUTOMATIC mode is blocked.

3.3 Tap changer supervision

The tap changer is supervised continuously by the regulator regarding static indications and dynamic operation behaviour.

If no plausible tap position can be calculated, the regulator is blocked and an alarm is initiated. In MANUAL mode operator control commands to the tap changer are still possible. If the device reaches the configured upper (lower) end position, **Raise** (**Lower**) commands are inadmissible in MANUAL as well as in AUTOMATIC mode.

If the regulator generates a command that is not executed by the tap changer, the command is repeated a configurable number of times (normally 3 repetitions). In case the tap changer does not operate after this number of repetitions the regulator is blocked and an alarm is initiated.

If the expected tap position after an operation command differs from the indicated new position (e.g. the position is increased by one tap although a LOWER command has been generated), the regulator is blocked as well and an alarm is initiated.

In both cases operator control commands to the tap changer are still possible in MANUAL mode.

3.4 Blocking

In case the controlled voltage falls below a configurable limit value the regulator is blocked and an alarm is initiated. In MANUAL mode operator commands are still possible.

In case the controlled voltage exceeds a configurable limit value the regulator is blocked and an alarm is initiated. In MANUAL mode operator commands are still possible.

In order to avoid an increase of circulating currents in parallel operation of two or more transformers due to malfunction of a single tap changer all regulators being in parallel mode are affected by a blocked state of at least one of the units.

As soon as one regulator is blocked due to reasons listed above all other units interacting in parallel mode with this regulator are blocked as well and an alarm is initiated. When the cause for the blocking of the unit is removed the blocking of all other units is reset as well.

3.5 Fast step down mode

If the controlled voltage exceeds a configurable limit value the delay time between two operating commands from the regulator is set to a configurable minimum time in order to return the voltage level into the admissi-

ble sector within the shortest possible range of time. As soon as the measured voltage falls under the limit value the delay follows the characteristic line again.

3.6 Fast step up mode

If the controlled voltage falls below a configurable limit value the delay time between two operating commands from the regulator is set to a configurable minimum time in order to return the voltage level into the admissible sector within the shortest possible range of time. As soon as the measured voltage exceeds the limit value the delay follows the characteristic line again.

3.7 Input process Interface

To realize a voltage regulation with the function blocks described above it is necessary among other things to detect the tap changer position at any time.

Generally there are several possibilities, dependent on the construction of the on-load tap changer, to encode the exact position:

- Position is binary coded (BC-Code), which means that every tap position is represented by a binary input signal.
- Position is binary decimal coded (BCD-Code), which means that the tap positions are coded by 5 or 6 binary input signals.
- Position is coded via an analog value, which means that every tap position is mapped in a defined current or voltage range. This value can be read via an analog input channel.

The analog process interface is used to connect the transformer voltage control function to a process where the tap changer information (tap position) is given as an analog value.

4 Setting

The setting parameters are accessible through the CAP 580 configuration tool. The parameters for the transformer voltage control function consist mainly of time and limit settings together with rated data for the controlled transformers.

The appendix shows the parameters and their setting ranges.

4.1 Single mode of operation

For a step-down transformer with the following rated voltages:
20000 (+/-13 x 500) V / 6000 V, the settings could be according to the function block below.

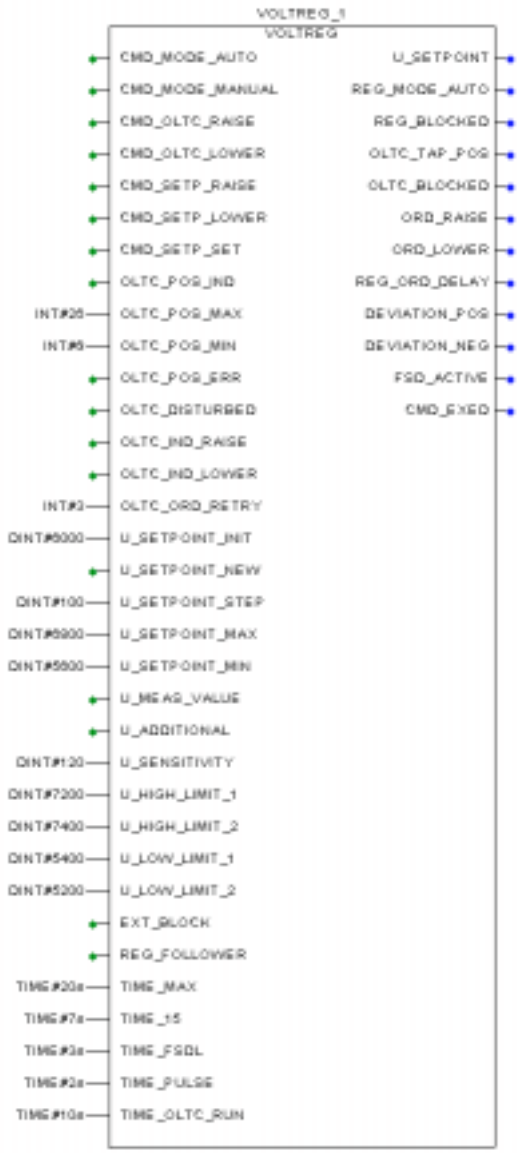

99000979.vsd

Figure 4: Voltage regulator function block example for a single step down transformer.

The tap-changer is on the primary side, with quite large steps (2.5%). On the secondary, controlled, side this corresponds to 150 V. The U_sensitivity is chosen to 120 V, which is a bit less than the tap size. If the voltage exceeds the upper trigger level just a little, the voltage level, after the time delay and tap-changer operation, will be 30 V below the setpoint.

4.2 Parallel mode of operation

For parallel operation of two identical transformers as in section 4.1, with Z_k=0.1 pu and S_n=12 MVA, each transformer needs both the single transformer control function block and the parallel transformer control function block.

For transformer 1, input values example for the parallel function block are shown in the following figure. Corresponding values are used for transformer 2.

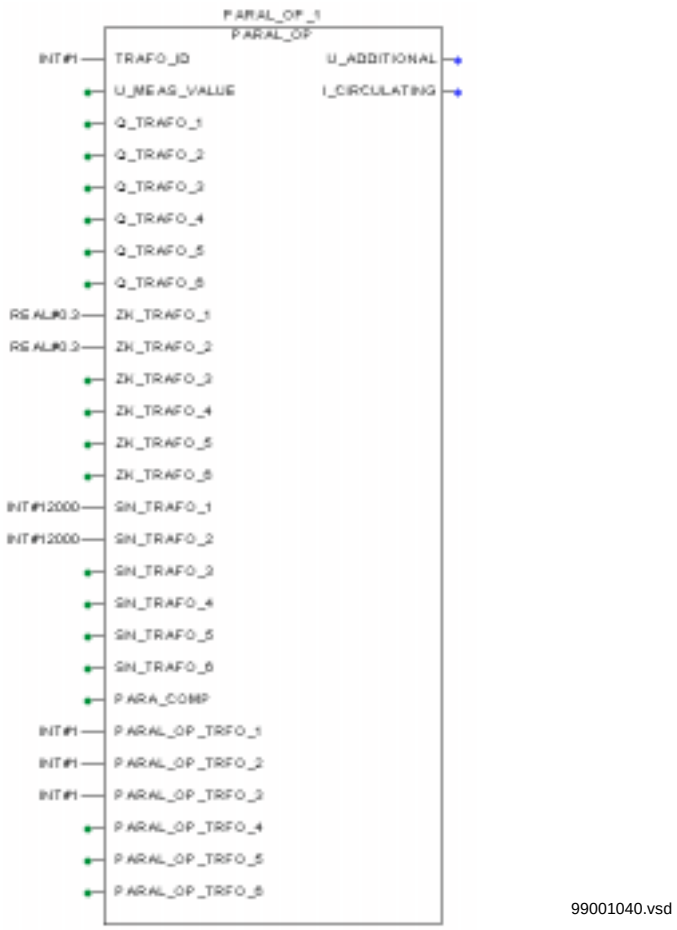

Figure 5: Parallell operation input values (example)

5 Appendix

5.1 Function blocks

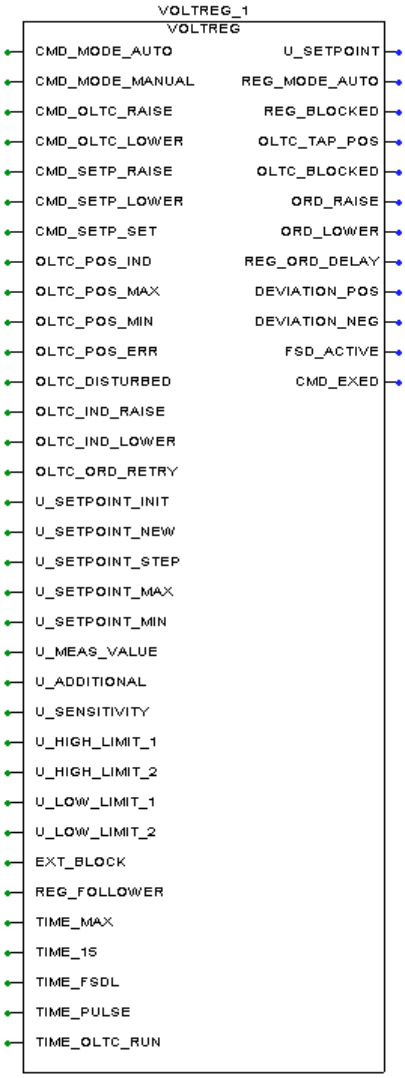

Figure 6: Single mode transformer voltage control

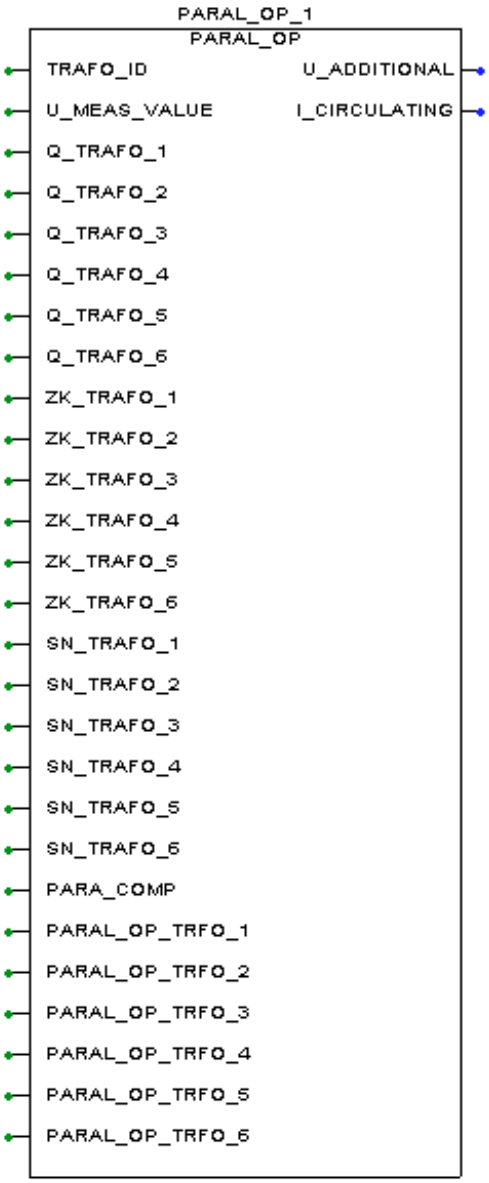

Figure 7: Parallel mode transformer voltage control

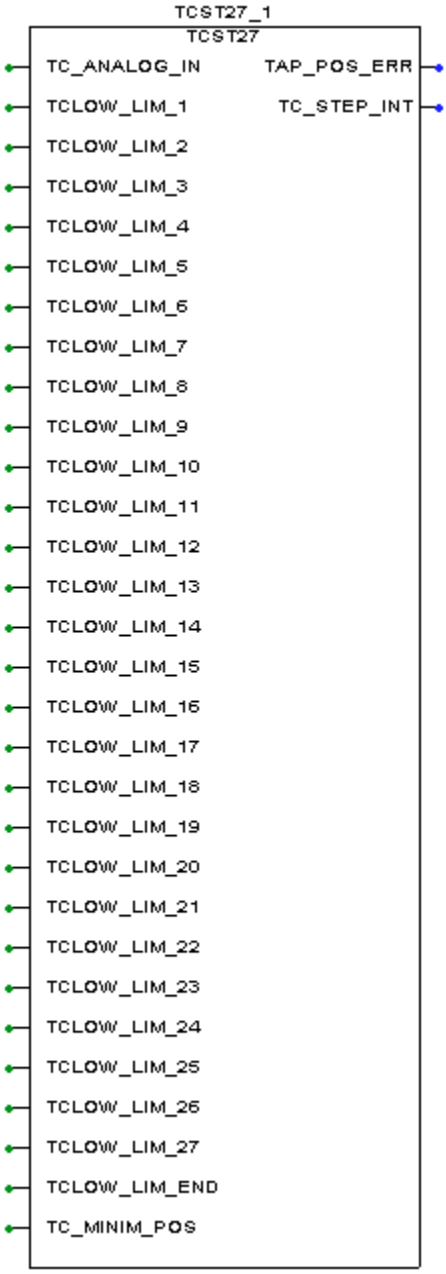

Figure 8: Analog process interface

5.2 Function block diagrams

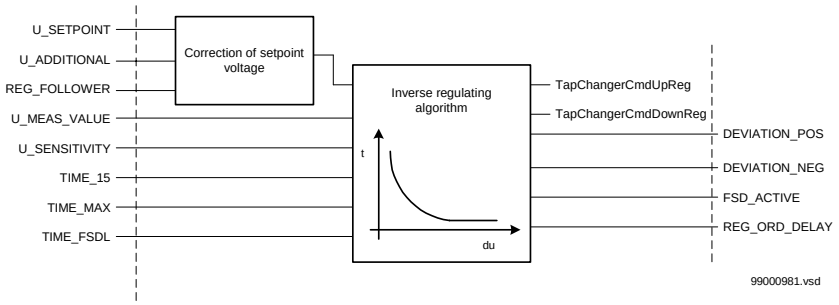

Figure 9: Calculation of the inverse regulating characteristic

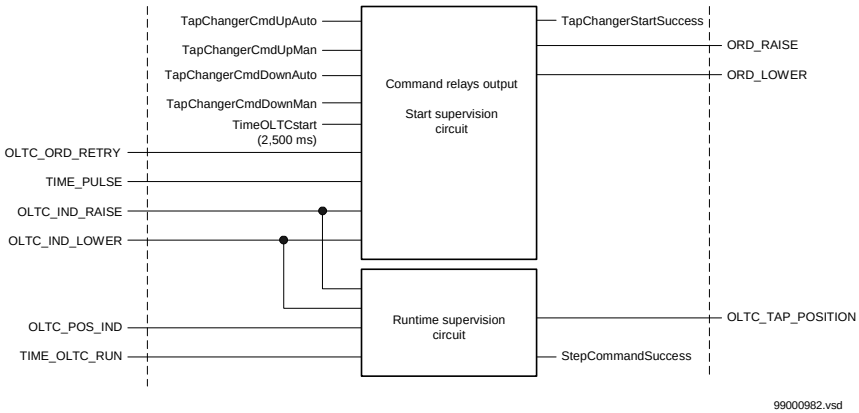

Figure 10: OLTC supervision circuit

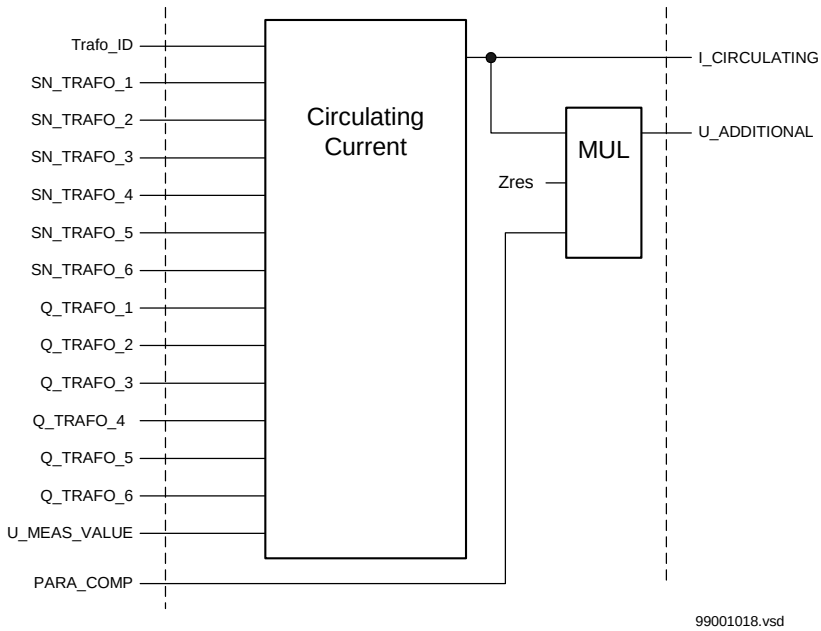

Figure 11: Calculating the circulating current and the additional voltage

5.3 Signal lists

Table 1: Single mode transformer voltage control

Signal	Type	In/out	Description
CMD_MODE_AUTO	BOOL	In	Command to switch the regulator to automatic mode
CMD_MODE_MANUAL	BOOL	In	Command to switch the regulator to manual mode
CMD_OLTC_RAISE	BOOL	In	Command to step up the tap changer
CMD_OLTC_LOWER	BOOL	In	Command to step down the tap changer
CMD_SETP_RAISE	BOOL	In	Command to raise the setpoint value
CMD_SETP_LOWER	BOOL	In	Command to decrease the setpoint value
CMD_SETP_SET	BOOL	In	Command to set a new setpoint value
OLTC_POS_IND	INT	In	Position of the tap changer (without suppression of undefined positions while stepping)
OLTC_POS_MAX	INT	In	Highest possible tap changer position, for example 19
OLTC_POS_MIN	INT	In	Lowest possible tap changer position, normally 1
OLTC_POS_ERR	BOOL	In	Invalid position indication of the tap changer, that is, information from the process is invalid, for instance a broken cable
OLTC_DISTURBED	BOOL	In	Tap changer is disturbed, a hardware signal directly from the tap changer
OLTC_IND_RAISE	BOOL	In	Tap changer is running up indication
OLTC_IND_LOWER	BOOL	In	Tap changer is running down indication
OLTC_ORD_RETRY	INT	In	Max. number of retries of step commands in case of malfunction
U_SETPOINT_INIT	DINT	In	Initial value of setpoint
U_SETPOINT_NEW	DINT	In	New setpoint value to take over by CMD_SETP_SET
U_SETPOINT_STEP	DINT	In	Difference of two successive setpoint values, when the commands CMD_SETP_RAISE or CMD_SETP_LOWER are used
U_SETPOINT_MAX	DINT	In	Max. permissible setpoint value
U_SETPOINT_MIN	DINT	In	Min. permissible setpoint value
U_MEAS_VALUE	DINT	In	Measured secondary voltage
U_ADDITIONAL	DINT	In	Additional secondary voltage caused by the compensation of circulating current
U_SENSITIVITY	DINT	In	Sensitivity of control characterization dependent on the size of the tap changer step
U_HIGH_LIMIT_1	DINT	In	Overvoltage limit for Fast Step Down mode
U_HIGH_LIMIT_2	DINT	In	Overvoltage limit for regulator blocking
U_LOW_LIMIT_1	DINT	In	Undervoltage limit for Fast Step Up mode
U_LOW_LIMIT_2	DINT	In	Undervoltage limit for regulator blocking
EXT_BLOCK	BOOL	In	Input for an external blocking of the regulator
REG_FOLLOWER	BOOL	In	Input which forces the regulator to run in follower mode
TIME_MAX	TIME	In	Max. delay time between the detection of the lowest voltage deviation and the control command to the tap changer, in case of a deviation of 1x relative sensitivity
TIME_15	TIME	In	Min. delay time in case of a deviation of 15x relative sensitivity

Table 1: Single mode transformer voltage control

Signal	Type	In/out	Description
TIME_FSDL	TIME	In	Delay time between two step commands in case of Fast Step Down Limit Operation
TIME_PULSE	TIME	In	Duration of step command
TIME_OLTC_RUN	TIME	In	Max. runtime of tap changer, used for runtime supervision
U_SETPOINT	DINT	Out	Setpoint voltage
REG_MODE_AUTO	BOOL	Out	Operation mode of regulator: 0: Manual 1: Automatic
REG_BLOCKED	BOOL	Out	Regulator is blocked
OLTC_TAP_POS	INT	Out	Position of the tap changer (with suppression of undefined positions while stepping)
OLTC_BLOCKED	BOOL	Out	Tap changer is blocked
ORD_RAISE	BOOL	Out	Step command up
ORD_LOWER	BOOL	Out	Step command down
REG_ORD_DELAY	TIME	Out	Calculated delay time until the next step command will occur
DEVIATION_POS	BOOL	Out	Positive voltage derivation (measured voltage > setpoint voltage)
DEVIATION_NEG	BOOL	Out	Negative voltage derivation (measured voltage < setpoint voltage)
FSD_ACTIVE	BOOL	Out	Fast step operation is active
CMD_EXED	BOOL	Out	Command was executed successfully

Table 2: Parallell mode transformer voltage control

Signal	Type	In/out	Description
TRAFO_ID	INT	In	Identity number of the transformer
U_MEAS_VALUE	DINT	In	Measured secondary voltage
Q_TRAFO_1	DINT	In	Reactive power of transformer 1, measured on the controlled side
Q_TRAFO_2	DINT	In	Reactive power of transformer 2, measured on the controlled side
Q_TRAFO_3	DINT	In	Reactive power of transformer 3, measured on the controlled side
Q_TRAFO_4	DINT	In	Reactive power of transformer 4, measured on the controlled side
Q_TRAFO_5	DINT	In	Reactive power of transformer 5, measured on the controlled side
Q_TRAFO_6	DINT	In	Reactive power of transformer 6, measured on the controlled side
ZK_TRAFO_1	REAL	In	Short-circuit impedance of transformer 1, referred to the secondary side
ZK_TRAFO_2	REAL	In	Short-circuit impedance of transformer 2
ZK_TRAFO_3	REAL	In	Short-circuit impedance of transformer 3
ZK_TRAFO_4	REAL	In	Short-circuit impedance of transformer 4
ZK_TRAFO_5	REAL	In	Short-circuit impedance of transformer 5
ZK_TRAFO_6	REAL	In	Short-circuit impedance of transformer 6

Table 2: Parallell mode transformer voltage control

Signal	Type	In/out	Description
SN_TRAFO_1	DINT	In	Rated power of transformer 1
SN_TRAFO_2	DINT	In	Rated power of transformer 2
SN_TRAFO_3	DINT	In	Rated power of transformer 3
SN_TRAFO_4	DINT	In	Rated power of transformer 4
SN_TRAFO_5	DINT	In	Rated power of transformer 5
SN_TRAFO_6	DINT	In	Rated power of transformer 6
PARA_COMP	REAL	In	Compensation parameter for commissioning. This parameter is used to adjust the sensitivity of the compensation behaviour. Normally this parameter should be set to 1.
PARAL_OP_TRFO_1	BOOL	In	Set to 1, if transformer 1 is working in parallel mode
PARAL_OP_TRFO_2	BOOL	In	Set to 1, if transformer 2 is working in parallel mode
PARAL_OP_TRFO_3	BOOL	In	Set to 1, if transformer 3 is working in parallel mode
PARAL_OP_TRFO_4	BOOL	In	Set to 1, if transformer 4 is working in parallel mode
PARAL_OP_TRFO_5	BOOL	In	Set to 1, if transformer 5 is working in parallel mode
PARAL_OP_TRFO_6	BOOL	In	Set to 1, if transformer 6 is working in parallel mode
U_ADDITIONAL	DINT	Out	Additional voltage to add to measured bus bar voltage
I_CIRCULATING	DINT	Out	Calculated circulating current

Table 3: Analog process interface

Signal	Type	In/out	Description
TC_ANALOG_IN	INT	In	Analog coded position of the tap changer
TCLOW_LIM_1	INT	In	Lower limit for recognizing physical tap position 1
TCLOW_LIM_2	INT	In	Lower limit for recognizing physical tap position 2
TCLOW_LIM_3	INT	In	Lower limit for recognizing physical tap position 3
TCLOW_LIM_26	INT	In	Lower limit for recognizing physical tap position 26
TCLOW_LIM_27	INT	In	Lower limit for recognizing physical tap position 27
TCLOW_LIM_END	INT	In	Upper limit for recognizing physical tap position 27
TC_MINIM_POS	REAL	In	Lowest logical tap position
TAP_POS_ERR	BOOL	Out	No valid position detected
TC_STEP_INT	INT	Out	Calculated logical tap position

5.4 Setting tables

Table 4: Single mode transformer voltage control

Parameter	Type/ [unit]	Usable range	Description
OLTC_POS_MAX	INT	-30-+30	Upper position of the tap changer, for example 19

Table 4: Single mode transformer voltage control

Parameter	Type/ [unit]	Usable range	Description
OLTC_POS_MIN	INT	-30-+30	Lower position of the tap changer, for example -5
OLTC_ORD_RETRY	INT	0-10	Max. number of retries of step commands in case of malfunction
U_SETPOINT_INIT	INT [V]	0-100000	Initial value of setpoint
U_SETPOINT_NEW	INT [V]	0-100000	New setpoint value to take over by CMD_SETP_SET
U_SETPOINT_STEP	INT [V]	0-1000	Difference of two successive setpoint values, when the commands CMD_SETP_RAISE or CMD_SETP_LOWER are used.
U_SETPOINT_MAX	INT [V]	0-100000	Max. permissible setpoint value
U_SETPOINT_MIN	INT [V]	0-100000	Min. permissible setpoint value
U_SENSITIVITY	INT [V]	0-1000	Sensitivity of control characterization depen-dend on a step of the tap changer
U_HIGH_LIMIT_1	INT [V]	0-100000	Overvoltage limit for Fast Step Down mode
U_HIGH_LIMIT_2	INT [V]	0-100000	Overvoltage limit for regulator blocking
U_LOW_LIMIT_1	INT [V]	0-100000	Undervoltage limit for Fast Step Up mode
U_LOW_LIMIT_2	INT [V]	0-100000	Undervoltage limit for regulator blocking
EXT_BLOCK	BOOL		Input for an external blocking of the regulator
REG_FOLLOWER	BOOL		Input which forces the regulator to run in fol-lower mode
TIME_MAX	TIME [s]	0-100	Max. delay time between the detection of the lowest voltage deviation and the control com-mand to the tap changer, in case of a deviation of 1x relative sensitivity.
TIME_15	TIME [s]	0-100	Min. delay time in case of a deviation of 15x rel-ative sensitivity.
TIME_FSDL	TIME [s]	0-100	Delay time between two step commands in case of Fast Step Down Limit Operation
TIME_PULSE	TIME [s]	0-10	Duration of step command
TIME_OLTC_RUN	TIME [s]	0-100	Max. runtime of tap changer, used for runtime supervision

Table 5: Parallell mode transformer voltage control

Parameter	Type [Unit]	Usable range	Description
TRAFO_ID	INT	1-6	Identity number of the transformer
ZK_TRAFO_1	REAL [ohm]	0.0-5.0	Short-circuit impedance of transformer 1, referred to the secondary side
ZK_TRAFO_2	REAL [ohm]	0.0-5.0	Short-circuit impedance of transformer 2
ZK_TRAFO_3	REAL [ohm]	0.0-5.0	Short-circuit impedance of transformer 3
ZK_TRAFO_4	REAL [ohm]	0.0-5.0	Short-circuit impedance of transformer 4
ZK_TRAFO_5	REAL [ohm]	0.0-5.0	Short-circuit impedance of transformer 5
ZK_TRAFO_6	REAL [ohm]	0.0-5.0	Short-circuit impedance of transformer 6
SN_TRAFO_1	INT [kVA]	0-500000	Rated power of transformer 1
SN_TRAFO_2	INT [kVA]	0-500000	Rated power of transformer 2
SN_TRAFO_3	INT [kVA]	0-500000	Rated power of transformer 3
SN_TRAFO_4	INT [kVA]	0-500000	Rated power of transformer 4
SN_TRAFO_5	INT [kVA]	0-500000	Rated power of transformer 5
SN_TRAFO_6	INT [kVA]	0-500000	Rated ppower of transformer 6
PARA_COMP	REAL	0.0-1.0	Max. runtime of tap changer, used for runtime supervision
PARAL_OP_TRFO_1	BOOL		Set to 1, if transformer 1 is working in parallel mode
PARAL_OP_TRFO_2	BOOL		Set to 1, if transformer 2 is working in parallel mode
PARAL_OP_TRFO_3	BOOL		Set to 1, if transformer 3 is working in parallel mode
PARAL_OP_TRFO_4	BOOL		Set to 1, if transformer 4 is working in parallel mode
PARAL_OP_TRFO_5	BOOL		Set to 1, if transformer 5 is working in parallel mode
PARAL_OP_TRFO_6	BOOL		Set to 1, if transformer 6 is working in parallel mode

1 Application

Automatic reclosing (AR) is a well-established method to restore the service of a power line after a transient line fault. The majority of line faults are flashover arcs, which are transient by nature. When the power line is switched off by operation of line protection and line breakers, the arc de-ionises and recovers voltage withstand at a somewhat variable rate. So a certain line *dead time* is needed. But then line service can resume by the auto-reclosing of the line breakers. Select the length of the dead time to enable good probability of fault arc de-ionisation and successful reclosing.

For the individual line breakers and auto-reclosing equipment, the Auto-reclose open time (AR open time) expression is used. At simultaneous tripping and reclosing at the two line ends, Auto-reclose open time equals the dead time of the line. Otherwise these two times may differ. In case of a permanent fault as shown in figure 1, the line protection trips again at reclosing to clear the fault.

The reclosing function can be selected to perform single-phase and/or three-phase reclosing from four single-shot to multiple-shot reclosing programs. The three-phase auto-reclose open time can be set to give either high-speed auto-reclosing (HSAR) or delayed auto-reclosing (DAR). The auto-reclosing can be performed with or without the use of synchro-check and energising check.

Single-phase tripping and single-phase reclosing is a way to limit the effect of a single-phase line fault to system operation. Especially at the higher voltages, the majority of line faults are of the single-phase type. The method is of particular value to maintain system stability in systems with limited meshing or parallel routing. It requires individual operation of each phase of the breakers, which is most common at the higher transmission voltages.

A somewhat longer dead time may be required at single-phase reclosing compared to high-speed three-phase reclosing, due to influence on the fault arc of the non-tripped phases.

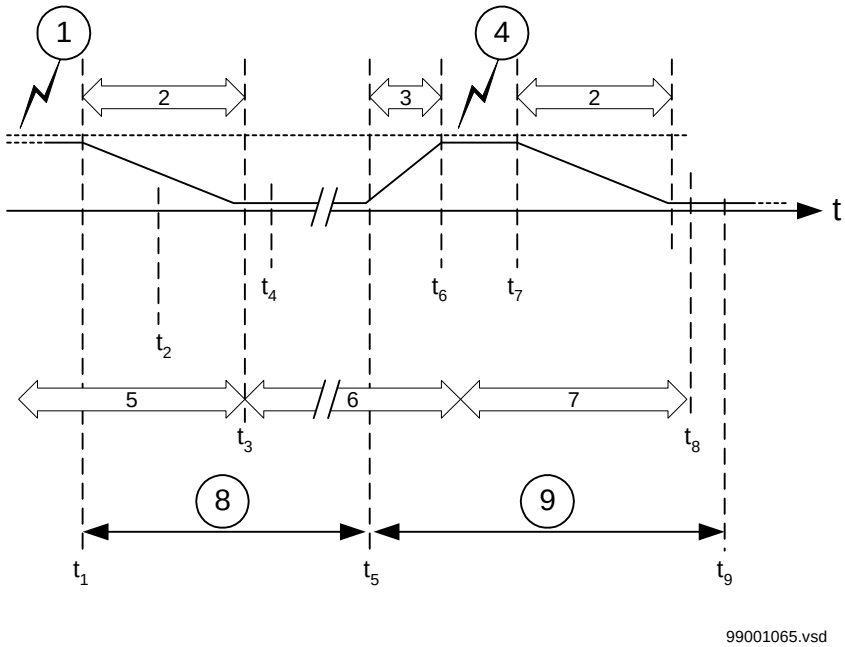

Figure 1: Single shot automatic reclosing sequence in the event of a permanent fault

Table 1:

1	Fault occurs
t1	The autoreclosing function activates (Start AR) the same time as the line protection function trips
2	Break time
t2	Contact separation
t3	Arc extinguishes
t4	Line protection function resets
3	Closing time
t5	The autoreclosing function makes a reclose attempt
t6	Contact closed
4	Fault recurs
t7	The line protection function trips
t8	Line protection function reset
t9	Autoreclosing function reset
5	Fault duration
6	AR open time for breaker
7	Fault duration
8	Set AR open time
9	Reclaim time

2 Theory of operation

The autorecloser function can perform from one to four single or three phase autorecloser attempts. The type and number is determined by the parameters AR_1_MODE (four different modes for the first reclosure cycle) and AR_2_4_MODE. Single phase reclosure is only performed for the first reclosure attempt.

The function can operate in conjunction with an external distance protection relay or with an internal protection function. It can also operate in a scheme comprising two or more distance relays.

It recloses the circuit breaker after a trip by the protection unit, if not blocked by the synchrocheck function. It can be applied for single or three phase autorecloser. Main features of the autorecloser function are:

- Up to four fast or slow reclosure attempts.
- First cycle with four separate single and/or three-phase attempts.
- Individual signals for every reclosure cycle.
- Wide dead time setting range.
- Provision for bypassing the synchrocheck unit and extending the dead time for the first zone by an external signal.
- Clearly defined response to changing fault conditions during the dead time (evolving faults).
- Logic for first and second main protection, duplex and master/follower schemes.

2.1 Autorecloser and distance protection connections

The autorecloser function determines from the states of the input signals START, TRIP_CB and TRIP_CB_3P, whether the distance protection has picked up and whether it has issued a single-phase (TRIP_CB) or a three-phase (TRIP_CB_3P) tripping signal.

The distance protection decides whether single or three phase tripping should take place. The autorecloser function can send two signals to the distance protection. The TRIP_3_POL signal informs the distance protection whether it should perform a single or a three phase trip. The ZEXTENSION signal switches the distance protection’s overreaching zone on and off.

Where the SOTF logic in distance protection function is not required to operate during autorecloser, connect the AR_IN_PROG signal to the EXTBLKSOTF binary input of the distance function. The SOFT_10_S timer in the distance function’s SOTF logic is normally activated for dead times shorter than 10 s and in this case the above connection is not necessary.

An autorecloser cycle can be inhibited by connecting trip switch-onto-fault from the distance function to the COND_BLK_AR input of the autorecloser function, if the SOTF logic initiates tripping.

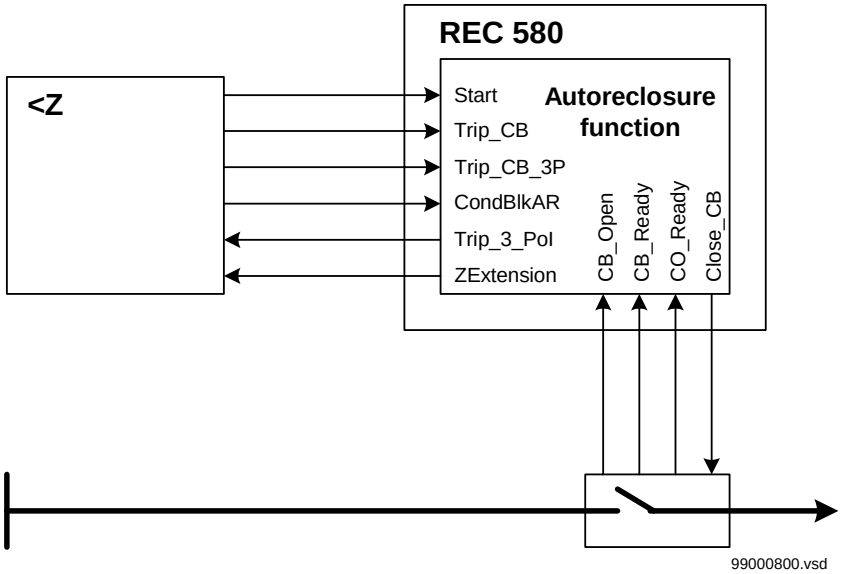

Figure 2: Distance protection and autorecloser functions signal exchange

2.2 Autorecloser and overcurrent protection connections

To prevent the discrimination timer from operating, the overcurrent TRIP signal must be connected to the START and TRIP_CB_3P inputs of the autorecloser function.

The time value T_CLOSE must be set so that it covers the maximum operating time of the activated (graded) overcurrent functions:

$$t_CLOSE > t_{max\ overcurrent\ time\ delay} \quad \text{(Equation 1)}$$

In cases where the zone extension signal is used in conjunction with overcurrent functions (see zone extension settings), the terms *overreach* and *underreach* have the following meanings:

overreach,enabling of an overcurrent function having a short (non-graded) time delay

underreach,enabling of an overcurrent function having a long (graded) time delay.

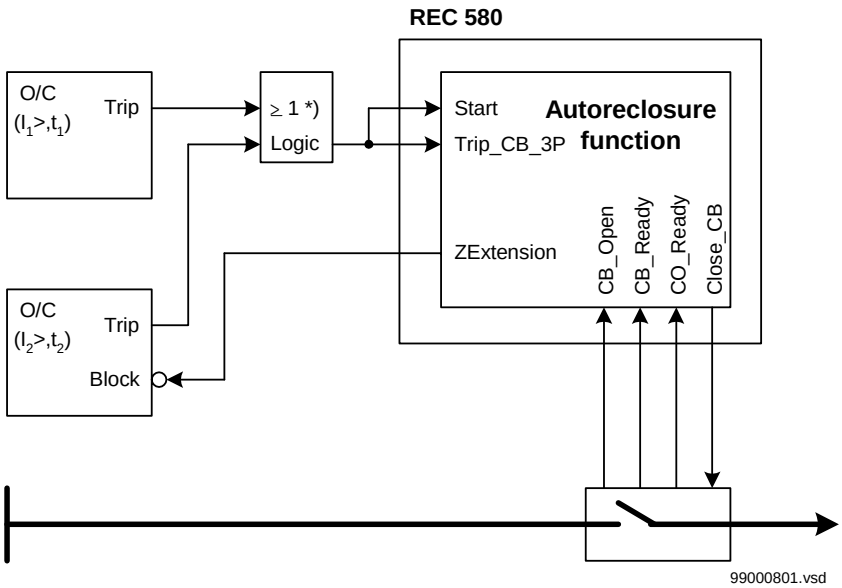

t_1	standard delay (0.5-1.5 s)
t_2	short delay (0.02-02 s)
$I_1>$, $I_2>$	pick up value I_SET for TRIP

Note:
The TRIP signal from the second current function may be connected to the inputs START_2 and TRIP_CB2_3P instead of the logic function.

Figure 3: Overcurrent protection and autorecloser signal exchange

2.3 Redundant schemes

Provision is made for coordinating the operation of two distance relays and one or two autorecloser relays per line terminal (see figure 4 and 5). A master/follower logic has to be used to avoid any time-race problems due to differing timer tolerances.

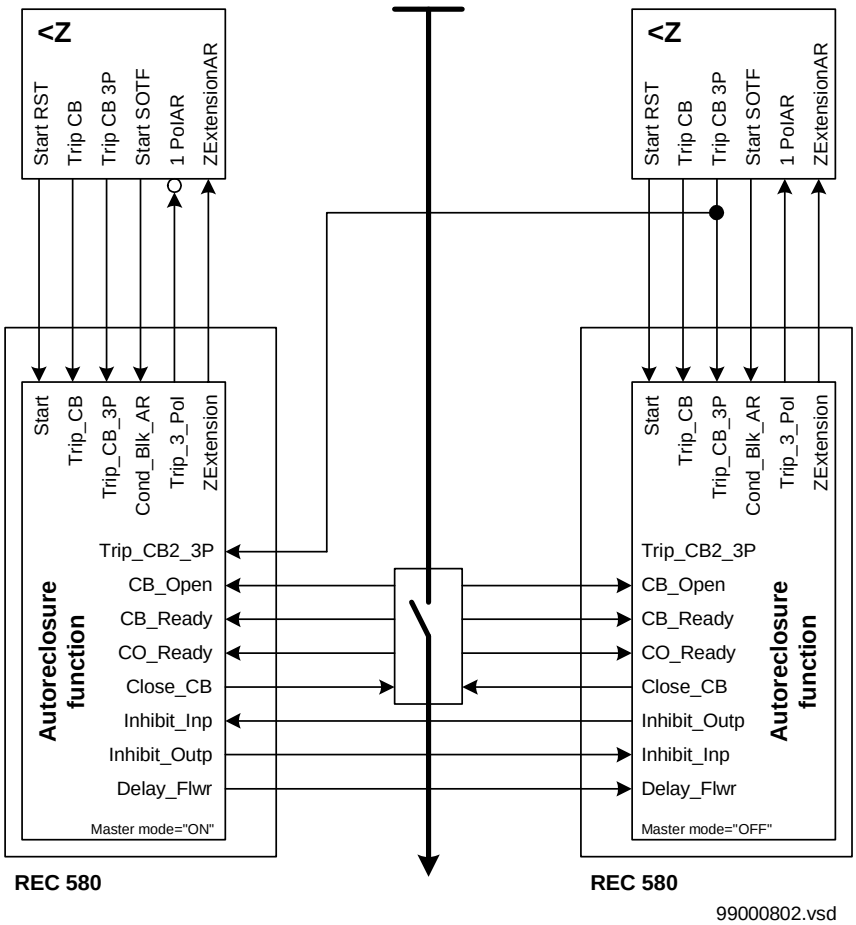

Figure 4: Redundant scheme (redundant sets of <Z and autorecloser functions) with master/follower logic

2.3.1 Blocking

In a redundant scheme, both sets of protection must be instantly blocked when the inhibit time in either of the autoreclosure functions starts to run.

This is achieved by applying a signal from the INHIBIT_OUTP output of one autorecloser function to the INHIBIT_INP input of the other.

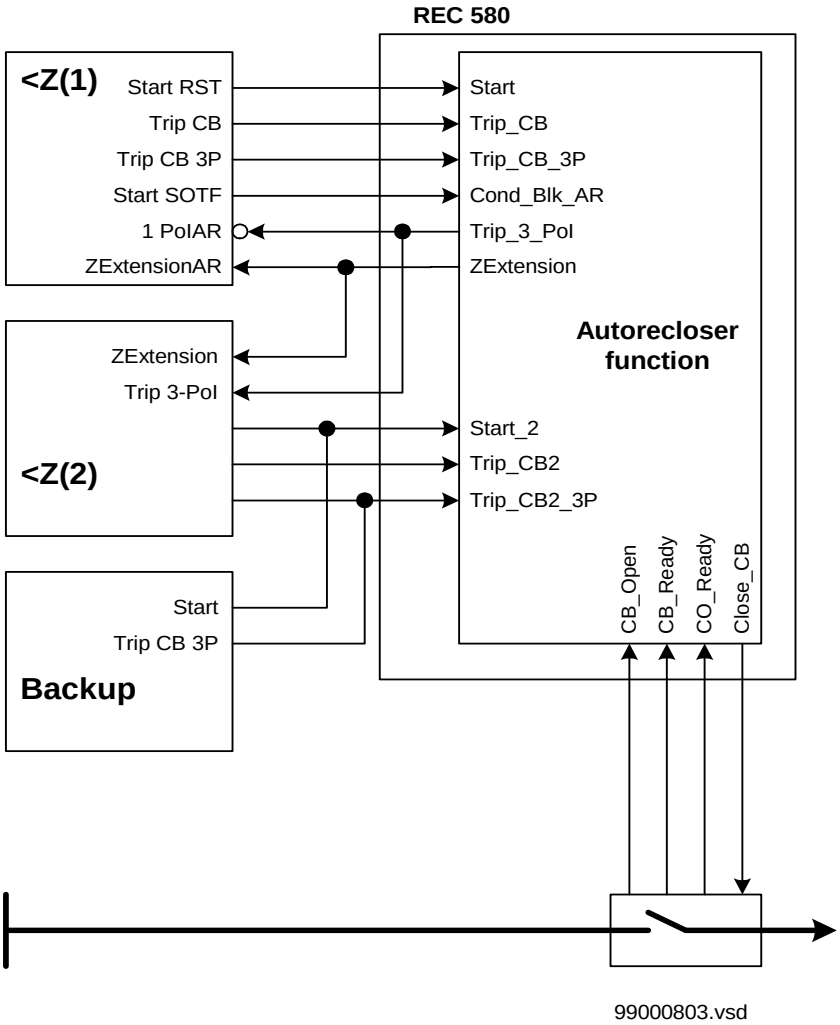

Figure 5: Redundant distance protection and a common autorecloser function

2.4 Master/follower logic

Provision is made for a master/follower logic in one single distance protection and an autorecloser function per circuit breaker.

One of the autorecloser functions is assigned the role of master by appropriately setting the parameter MASTER_MODE. After a successful reclosure, the master circuit breaker enables the FOLLOWER_AR autorecloser function, respectively its circuit breaker (see figure 6).

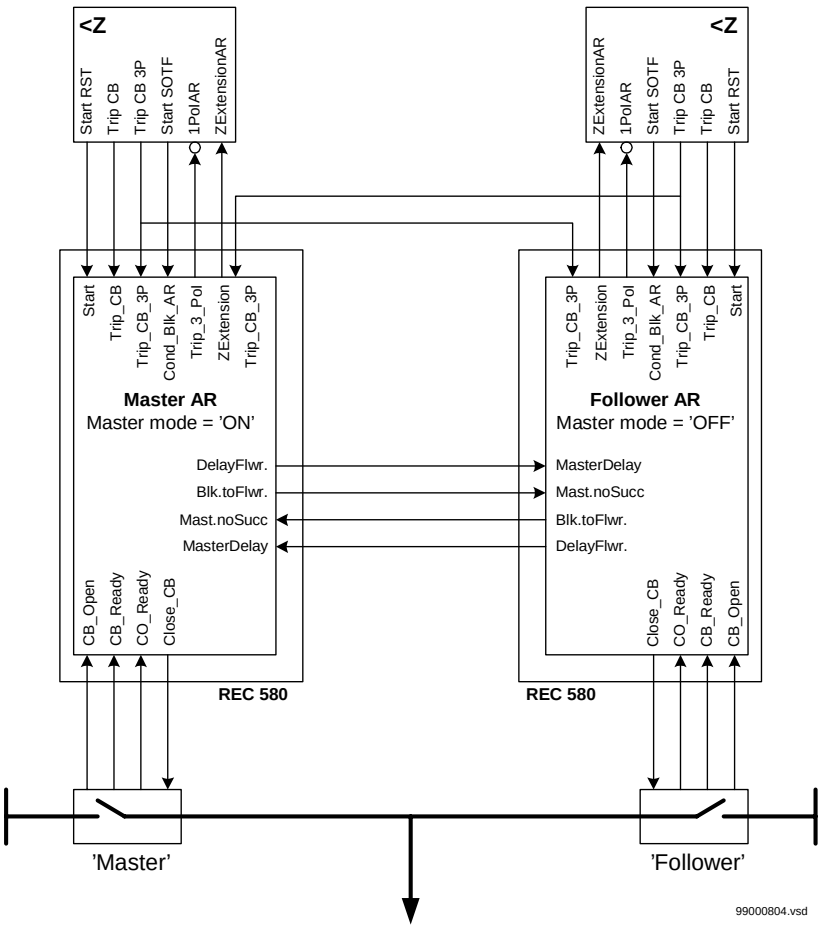

Figure 6: Master/follower scheme

2.4.1 Follower CB delay

The master recloser function sends an active DELAY_FLWR signal to the MASTERDELAY input of the follower recloser function where it delays the CLOSE_CB command to the follower circuit breaker until the master recloser function has completed its reclosure cycle (DELAY_FLWR signal resets).

Should this signal reset before the end of the follower dead time, the close command to the follower circuit breaker is issued at the end of the dead time.

2.4.2 Blocking the follower reclosure

The master reclosure function sends an active BLK_TOFLWR signal to the MAST_NOSUCC input of the follower reclosure function and blocks reclosure by the follower.

2.4.3 Duplex logic

A duplex logic for two circuit-breakers on a line is also included (see figure 7).

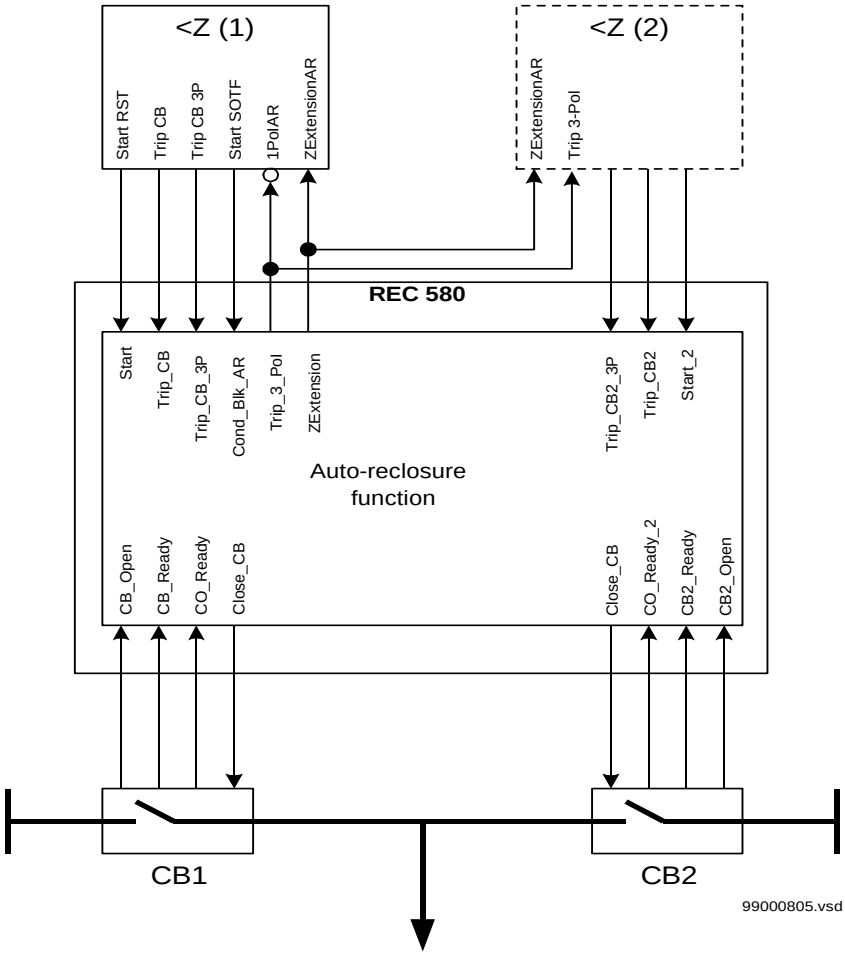

Figure 7: Duplex scheme (<Z possibly redundant)

The corresponding circuit breaker signals must be connected to the CB_OPEN and CB2_OPEN inputs for the duplex logic to operate correctly (setting to FALSE inhibits the duplex logic).

If separate CB_READY and CB_OPEN signals are not available from the circuit breakers, do the following:

1. **Connect the two signalling contacts CB_READY (air pressure or spring charging) and CB_CLOSED on the circuit breakers in series**

   For this, T_CLOSE must be set longer than the maximum spring charging time to suppress the definitive trip signal in the case of a successful reclosure.

2. **Assign the combined signals to the corresponding CB_READY inputs**

3. **Assign the same signals but inverted to the corresponding CB_OPEN inputs.**

   The CB_READY and CB2_READY inputs must be applied to an OR logic in the autoreclosure function. If both circuit breakers were closed prior to the fault, the lockout signal will be generated the instant at least one of the circuit breakers does not reclose.

3 Design

3.1 Timers

Any timer setting must not exceed 300 s and must not be changed after the settings procedure.

3.1.1 Dead times

The dead time is the period between the tripping signal (TRIP_CB) and the close signal (CLOSE_CB). The required dead time must be entered separately for each reclosure cycle.
This necessitates setting the parameters T_DEAD1_1P, T_DEAD1_3P, T_DEAD2, T_DEAD3 and T_DEAD4.

Provision is made for externally switching the dead times T_DEAD1_1P and T_DEAD1_3P for the first (fast) reclosure attempt to a second setting. The corresponding additional time period can be set with the aid of the parameter T_DEAD1_EXT and activated via the binary input EXTEND_T1.

The 2nd., 3rd. and 4th. reclosure attempts are always three-phase.

3.1.2 Extended dead time

The timer T_DEAD1_EXT provides for extending the dead time (for example should the communications channel be defective or for a master/follower scheme with two autorecloser functions). The extended dead time is enabled by the binary input EXTEND_T1.

3.1.3 Maximum fault duration for a reclosure attempt

If a fault has persisted for some time, the probability of a successful reclosure reduces. The likelihood of the power system becoming unstable is also greater for an unsuccessful autoreclosure attempt following a fault which has persisted for a longer period. It is for these reasons that the time after the inception of a fault during which reclosure can be initiated is limited. The fault duration is set using parameter T_OPER.

The timer for the fault duration is started by the pick-up signal from the protection function (START). Faults resulting in tripping after T_OPER are locked out (DEF_TRIP) and reclosure does not take place.

Should the fault duration time expire before the protection trips, autoreclosure is blocked and the reclaim time is started.

Example: Time T_OPER < $Delay_2$ of the distance function means that auto-reclosure only takes place for faults in the first distance zone ($Delay_1$).

This function is not required by schemes only using current functions. The binary inputs START and TRIP_CB_3P are connected together.

3.1.4 Reclaim time

Following successful reclosure or a definitive trip (see output signal DEF_TRIP), the auto-reclosure function is disabled for the duration of the inhibit time set for parameter T_INHIBIT. The purpose of the inhibit time is among other things to permit the circuit-breaker to recover its full withstand.

3.1.5 Close signal duration

The maximum duration of the circuit-breaker close signal (command output CLOSE_CB) is determined by the parameter T_CLOSE. Any tripping signal which occurs during this time overrides the close signal. A second, third or fourth reclosure attempt can only take place, if the next trip occurs within the time T_CLOSE.

3.1.6 Discrimination times

The discrimination time determines the procedure in the event of a different kind of fault occurring during the dead time (evolving fault), i.e. one of the other two phases also picks up or the tripping signal resets and picks up again. The discrimination time is started together with the dead time. Should a tripping signal recur due to an evolving fault between the expiry of the discrimination time and before the end of the dead time, the reclaim timer is started and a definitive trip (DEF_TRIP) initiated. The dead time is also discontinued and the signal AR_IN_PROG reset.

If the first fault was initially a single-phase fault and evolves during the time T_DEAD1_1P, but before the end of the discrimination time T_DISCRIM_1P, then the dead time T_DEAD1_3P is started and three phase reclosure takes place.

The discrimination time T_DISCRIM_3P is also needed for 2 or 1 1/2 breaker schemes, where each circuit-breaker has its own autorecloser function.

Typical settings for the parameters T_DISCRIM_1P or T_DISCRIM_3P for single and three phase reclosure are 50% of the shortest dead time.

The minimum permissible setting for the discrimination time is:

$$t_{discrim} = 100\ ms + t_{CB} \qquad \text{(Equation 2)}$$

Note: The time T1EVOLFAULTS during which a subsequent fault has to be detected (evolving or unsuccessful reclosure) is a distance function setting (see the section “Distance protection”).

The distance protection parameter T1EVOLFAULTS enables the time to be set during which a subsequent fault (evolving or unsuccessful reclosure) results in a three phase trip, i.e. every second trip by the distance protection function trips all three poles. The autorecloser function also signals the switch-over to three phase tripping by exciting the signal TRIP_3_POL at the end of the fault duration time T_DISCRIM_1P.
It is advisable to set the time T1EVOLFAULTS longer than the autoreclosure dead time T_DEAD1_1P.

3.1.7 Close assertion time-out

The parameter T_TIMEOUT determines the period after the dead time within which the close signal must be issued, otherwise a lock-out trip is generated and no further reclosure attempt is made. Before a close command is issued at the end of every dead time, the boolean expression

$$(SYNCROCHCK \cdot CO_READY) + DEAD_LINE + EXTSCBYPASS \quad \text{(Equation 3)}$$

is evaluated and the command is only enabled providing all the criteria are correct within the setting of T_TIMEOUT.

3.1.8 Blocking time

The autorecloser function can be enabled or disabled by the binary input signals:

- EXT_BLK_AR – also blocks during the reclosure cycle
- MANUAL_CLOSE – also blocks during the reclosure cycle
- INHIBIT_INP – also blocks during the reclosure cycle
- CB_READY – blocks excepting during the reclosure cycle
- CB2_READY – blocks excepting during the reclosure cycle[1]
- CO_READY – blocks at the end of the reclosure cycle after expiry of the T_TIMEOUT window
- CO_READY_2 – blocks at the end of the reclosure cycle after expiry of the t_timeout window1
- MAST_NOSUCC – blocks the master CB following its unsuccessful reclosure attempt
- COND_BLK_AR – blocks excepting during the reclosure cycle.

Should a COND_BLK_AR signal occur during a reclosure cycle (i.e. the AR_IN_PROG signal is active), it is only observed from the end of the current reclosure cycle.

A reclosure cycle remains blocked for the duration of the set blocking time T_AR_BLOCK after the last binary input has been enabled. Blocking also takes place during initialization of the protection relay when its auxiliary supply is switched on or the parameter settings are being loaded.

3.2 External binary inputs

3.2.1 Start and trip signals from the distance protection function

In order to control the autorecloser function, it is necessary to configure the three input signals TRIP_CB (general trip), TRIP_CB_3P (three phase trip) and START. Since the autorecloser function is completely independent, signals from other functions may also be selected.

1. The figure ‘2’ denotes the CB 2 I/O’s in a duplex scheme (see “Redundant schemes” on page 209).

In a 1st. and 2nd. main protection scheme with one autorecloser function (see “Autorecloser and overcurrent protection connections” on page 208), the input signals TRIP_CB2, TRIP_CB2_3P and START_2 must also be connected to the second distance protection function.

3.2.2 Circuit breaker ready signals

The inputs for the parameters CO_READY and CB_READY (or CO_READY_2 and CB2_READY in a duplex scheme) must be connected to the circuit breakers in order to signal that they are ready to perform a complete reclosure cycle. In cases where one of the inputs is not used, it must thus be set to TRUE, while taking into account that the two inputs CB_READY and CB2_READY are applied to an OR logic.

An active CB_READY signal informs the autorecloser function that reclose is permissible (i.e. sufficient energy is available for a full open/close/open cycle). Once a reclosure cycle has started, this signal is ignored (because the pressure varies during a reclosure cycle of an air-blast breaker).

The CO_READY signal (close-open cycle can be carried out) is only evaluated during a reclosure cycle, i.e. during the dead time. Should there be insufficient energy to open the circuit-breaker again following closure, the close signal is disabled and a DEF_TRIP (definitive trip) is generated.

This input is only used in conjunction with circuit-breakers, which provide the corresponding information (C-O query), for example spring-charged and air-blast circuit breakers with two switching energy levels.

3.2.3 Circuit breaker open

It is also necessary to include the initial status of the circuit-breakers to prevent one from receiving a close signal, which was already open before the fault occurred.

The binary input CB_OPEN (and CB2_OPEN in a duplex scheme) is thus provided to determine the initial status of a circuit-breaker.

These signals have an operating delay of 100 ms, so that no unwanted blocking takes place in the case of fast circuit-breakers.

A circuit breaker which was already open before the start signal was received (CB_OPEN at logical 1) is not closed by the autorecloser function.

Where a circuit breaker does not provide the necessary information (CB_OPEN signal), the input must be permanently set to FALSE and if it also is not a duplex scheme (only one CB) the binary input CB2_OPEN must be permanently set to on (T or True). Accordingly these are also the default settings for CB_OPEN and CB2_OPEN.

The auto-recloser function can then operate with a single circuit-breaker without a CB_OPEN signal and no superfluous close signal is generated for the non-existing CB2.

3.2.4 De-energized line and checking synchronism

Before the CLOSE_CB (or CLOSE_CB2) instruction can be issued, either the DEAD_LINE or the SYNCHROCHCK input (or DEAD_LINE_2 or SYNCHROCHCK2 in a duplex scheme) must be at logical 1. See the following boolean expressions:

$$(SYNCHROCHCK \cdot CO_READY) + DEAD_LINE + EXTSCBYPASS \quad \text{(Equation 4)}$$

$$(SYNCROCHCK2 \cdot CO_READY_2) + DEAD_LINE_2 + EXTSCBYPASS \quad \text{(Equation 5)}$$

3.2.5 External blocking

The reclosure function is always blocked by an active EXT_BLK_AR input. An active COND_BLK_AR input will only block the function, providing a reclosure cycle is not running (i.e. the AR_IN_PROG signal is at logical 0).

The COND_BLK_AR signal is only needed to prevent a reclosure cycle, when the first trip was initiated by the switch-onto-fault protection (SOTF).

The COND_BLK_AR signal must be connected to the distance protection signal SOTF_start.

The autorecloser function is immediately blocked (for the blocking time T_AR_BLOCK) by the MANUAL_CLOSE signal. This signal is also needed for the overreaching logic to switch the ZEXTENSION signal to on.

3.2.6 External synchrocheck bypass signal

This input provides facility for bypassing the SYNCHROCHCK and CO_READY (or SYNCHROCHCK2 and CO_READY_2 for CB2) enabling inputs. It is only used for a first fast three phase or single phase reclosure.

3.2.7 External extension of the dead time

A logical 1 at the EXTEND_T1 input extends the dead times T_DEAD1_1P and T_DEAD1_3P by the setting T_DEAD1_EXT for the first (fast) reclosure attempt. This could be necessary, for example, in the event of a communication channel failure or in a master/follower scheme when using a separate autorecloser function per circuit-breaker.

3.3 Close CB and signalling outputs

The most important autorecloser output is the CLOSE_CB command, which must be assigned to a heavy-duty auxiliary output relay. This and a number of other outputs are available for signalling purposes.

3.3.1 Function status

The signal AR_READY is generated when the auto-reclosure function is ready to perform a reclosure cycle and the AR_BLOCKED that a reclosure cycle is blocked. The AR_READY signal is at logical 1, whenever a

reclosure cycle is not blocked (no AR_BLOCKED signal) and a dead time is not in progress. The AR_READY signal is active during a reclosure command for purposes of enabling the synchrocheck function.

3.3.2 Autoreclosure cycle in progress

There are six signals which show that a reclosure cycle is running and what stage has been reached:

- AR_IN_PROG – reclosure cycle in progress
- FIRST_AR_1P – first single-phase cycle
- FIRST_AR_3P – first three-phase cycle
- SECOND_AR – second cycle
- THIRD_AR – third cycle
- FOURTH_AR – fourth cycle.

3.3.3 Circuit-breaker closing signals

The CB closing instruction is normally assigned to a heavy-duty auxiliary output relay by correspondingly setting the parameter CLOSE_CB (and also CLOSE_CB2 in a duplex scheme). It is also possible to assign the same signal to a signalling output under the same parameter name.

A trip during a close command ($time = t_{close} + 300\ ms$) switches the dead time step (second, third and fourth AR) or initiates a lock-out trip (according to setting). A close command is reset immediately after a trip.

3.3.4 Definitive trip

The DEF_TRIP signal indicates that the circuit-breaker will remain tripped and no further reclosure attempts will be made. A definitive trip can be caused when:

- all reclosure attempts were unsuccessful
- a starting or tripping signal was generated after the discrimination time or during the reclaim time
- tripping takes place while a reclosure cycle is blocked (either via the blocking I/P or by the reclaim time)
- the SYNCHROCHCK (or DEAD_LINE) and/or CO_READY inputs were not enabled during T_TIMEOUT due to lack of synchronism
- The CB_OPEN signal is still active 300 ms after the close signal has reset (i.e. the CB has not responded to the close signal).

3.3.5 Perform three phase trip

The TRIP_3_POL output instructs the line protection to trip all three phases. The signal can be externally connected or internally via the binary circle function. This signal is generated automatically, if reclosure is blocked, after a three phase trip or at the end of the discrimination time (T_1P/3P_DISCRIM).

3.3.6 Zone extension

The setting of the autorecloser parameter ZE_PREFAULT determines the prefault reach of the distance protection when the autorecloser function is inactive (before the first fault), i.e. setting ZE_PREFAULT to on activates the output signal ZEXTENSION which then switches the distance function to overreach.

The parameters ZE_AR_1 to ZE_AR_4 provide facility for individually switching the reach for each reclosure attempt. Setting one of these parameters to on means that the ZEXTENSION output is at logical 1 and the distance relay is switched to overreach for the corresponding reclosure cycle, otherwise the distance relay is set to underreach. The signal to switch the reach is issued at the same time as the CLOSE_CB SIGNAL.

The distance relay is switched to overreaching for a MANUAL_CLOSE. It is switched to under-reaching when the auto-reclosure function is blocked.

Note also that the ZEXTENSION signal is connected to the binary input ZEMODE_AR of the zone extension logic of the distance protection.

The parameters ZE_PREFAULT and ZE_AR1 to ZE_AR4 must not be changed after the settings procedure.

4 Appendix

4.1 Function block

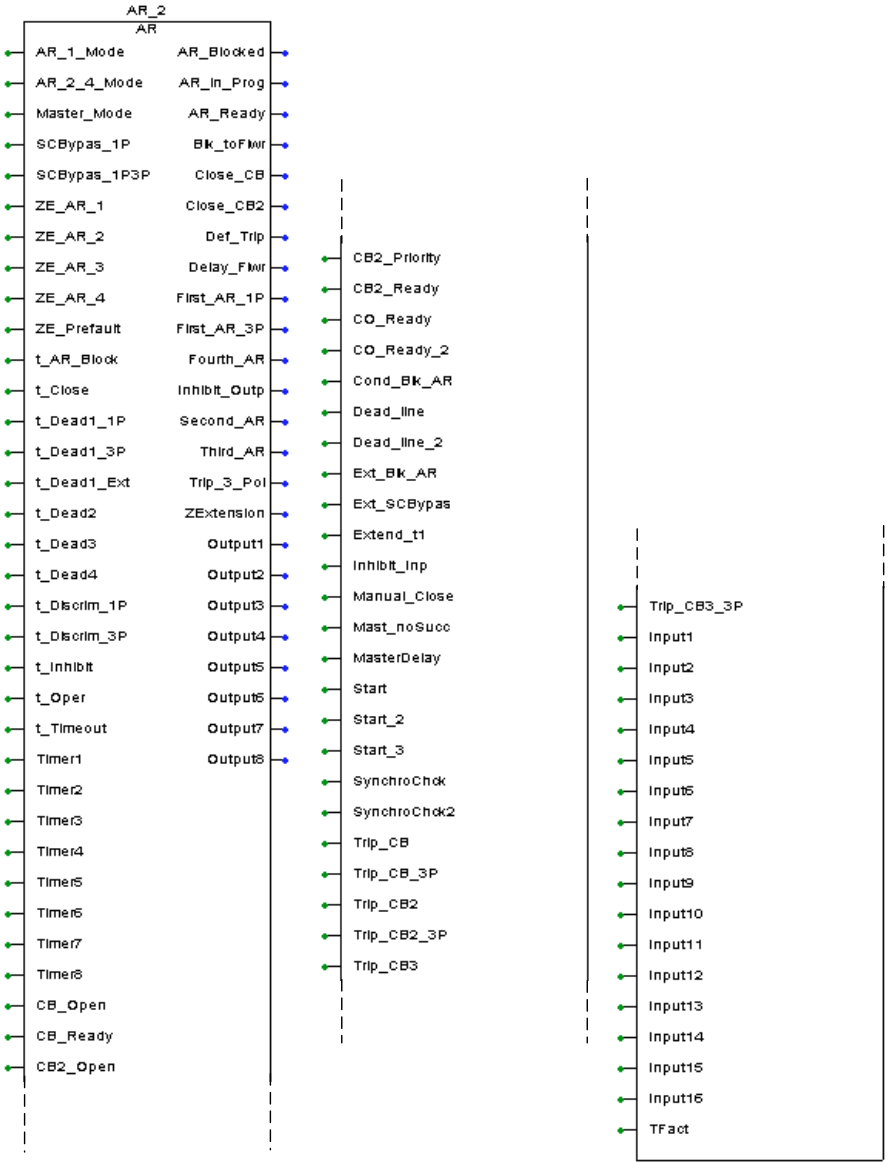

99000818.vsd

4.2 Signal list

Signal	Type	In/Out	Description
Start	BOOL	In	Start of a reclosure cycle
TRIP_CB_3P	BOOL	In	Three phase trip signal
TRIP_CB	BOOL	In	General trip signal
CB_READY	BOOL	In	CB is ready (open/close/open cycle)

Signal	Type	In/Out	Description
CO_READY	BOOL	In	CB ready for close/open cycle
CB_OPEN	BOOL	In	CB open
SYNCHROCHCK	BOOL	In	Input from synchrocheck which enables the close CB command
DEAD_LINE	BOOL	In	Line is de-energized (CB_Open and v.t's on the bus-bar side)
EXT_BLK_AR	BOOL	In	Block autorecloser
COND_BLK_AR	BOOL	In	Conditional blocking signal. The switch-onto-fault signal from a distance protection function can be connected to this input to prevent an autoreclosure cycle when tripped from the SOTF logic
MANUAL_CLOSE	BOOL	In	Manual CB close signal
EXT_SCBYPAS	BOOL	In	Bypass the synchroChck and CO_Ready signals
EXTEND_T1	BOOL	In	Conditionally extend the t1 dead time for the first (fast) reclosure (single and three phase)
MASTERDELAY	BOOL	In	Delay the dead time of the master CB
MAST_NOSUCC	BOOL	In	Blocking signal from the master CB
INHIBIT_INP	BOOL	In	Block the 2nd. reclosure in a 1st. and 2nd. main protection scheme (during its dead time)
START_2	BOOL	In	AR start signal. In redundant protection schemes, the general start signal from the 2nd. protection is connected to this input
TRIP_CB2_3P	BOOL	In	Three phase trip signal. In redundant protection schemes, the three phase trip signal from the 2nd. protection is connected to this input
TRIP_CB2	BOOL	In	General trip signal. In redundant protection schemes, the general start signal from the 2nd. protection is connected to this input
CB2_READY	BOOL	In	CB2 ready (open/close/open cycle). In a duplex scheme, either an active CB_Ready or CB2_Ready input enables the autoreclosure cycle
CO_READY_2	BOOL	In	CB2 ready for close/open cycle
CB2_OPEN	BOOL	In	CB2 open
SYNCHROCHCK2	BOOL	In	Input from second synchrocheck which enables the close CB command in a duplex scheme
DEAD_LINE_2	BOOL	In	Line 2 is de-energized (CB2_Open and v.t's 2 on the bus-bar side)
START_3	BOOL	In	AR start signal. In redundant protection schemes, the general start signal from the 3rd. protection is connected to this input
TRIP_CB3_3P	BOOL	In	Three phase trip signal. In redundant protection schemes, the three phase trip signal from the 2nd. protection is connected to this input
TRIP_CB3	BOOL	In	General trip signal. In redundant protection schemes, the general start signal from the 3rd. protection is connected to this input
DELAY_FLWR	BOOL	Out	Delay the follower CB while the master circuit-breaker has not completed its autoreclosure cycle
BLK_TOFLWR	BOOL	Out	Block the follower CB as long as reclosure of the master CB is unsuccessful
CLOSE_CB	BOOL	Out	Auxiliary relay output for the CB close command

Signal	Type	In/Out	Description
TRIP_3_POL	BOOL	Out	Signals the distance function to carry out a three phase trip for an earth fault
ZEXTENSION	BOOL	Out	Signals the distance function to switch to overreach or enable an overcurrent function with a short delay.
DEF_TRIP	BOOL	Out	Lock-out tripping of the CB
AR_READY	BOOL	Out	Reclosure relay ready for a reclosure cycle
AR_IN_PROG	BOOL	Out	Reclosure cycle is in progress
AR_BLOCKED	BOOL	Out	Autorecloser is blocked
FIRST_AR_3P	BOOL	Out	1st. three phase reclosure cycle is in progress
FIRST_AR_1P	BOOL	Out	1st. single phase reclosure cycle is in progress
SECOND_AR	BOOL	Out	2nd. reclosure cycle is in progress (always three phase)
THIRD_AR	BOOL	Out	3rd. reclosure cycle is in progress (always three phase)
FOURTH_AR	BOOL	Out	4th. reclosure cycle is in progress (always three phase)
INHIBIT_OUTP	BOOL	Out	Block the 2nd. reclosure in a 1st. and 2nd. main protection scheme
CLOSE_CB2	BOOL	Out	Auxiliary relay output for the CB2 close command

4.3 Settings table

Note: Parameters must be set during the setting procedure and must not be changed afterwords.

Parameter	Type/ [unit]	Usable range	Default	Description
AR_1_MODE	INT	0-4	0	Type of first reclosure: 0: Off 1: 1 ph. reclosure, earth fault only, no reclosure for 3 ph. faults 2: 3 ph. reclosure, earth fault only, no reclosure for 3 ph. faults 3: 3ph. reclosure, earth and phase faults 4: 1 ph. reclosure, earth fault only, 3 ph. faults reclosure
AR_2_4_MODE	INT	0-3	0	Maximum number of reclosure attempts (all three-phase) after first reclosure
MASTER_MODE	BOOL		FALSE	Selection of the particular autorecloser function to be master. Used only in 1 1/2 and 2 breaker schemes
ZE_PREFAULT	BOOL		TRUE	Distance relay reach setting before the first fault. FALSE: underreaching (ZExtension signal inactive), TRUE: overreaching (ZExtension signal active)
ZE_AR_1	BOOL		FALSE	Distance relay reach for the 1st. reclosure attempt FALSE: underreaching (Zextension signal inactive), TRUE: overreaching (Zextension signal active)

Parameter	Type/ [unit]	Usable range	Default	Description
ZE_AR_2	BOOL		FALSE	Distance relay reach for the 2nd. reclosure attempt FALSE: underreaching (Zextension signal inactive), TRUE: overreaching (Zextension signal active)
ZE_AR_3	BOOL		FALSE	Distance relay reach for the 3rd. reclosure attempt FALSE: underreaching (Zextension signal inactive), TRUE: overreaching (Zextension signal active)
ZE_AR_4	BOOL		FALSE	Distance relay reach for the 4th. reclosure attempt FALSE: underreaching (Zextension signal inactive), TRUE: overreaching (Zextension signal active)
SCBYPAS_1P	BOOL		FALSE	Bypass of the synchrocheck and close/open ready signals for the first single phase reclosure
SCBYPAS_1P3P	BOOL		FALSE	Bypass of the synchrocheck and close/open ready signals for the first single and three phase reclosure
T_DEAD1_1P	REAL [s]	0.05-300	001.20	1st. dead time for single phase reclosure. Increment in steps of 0.01 s
T_DEAD1_3P	REAL [s]	0.05-300	000.60	1st. dead time for three-phase reclosure. Increment in steps of 0.01 s
T_DEAD1_EXT	REAL [s]	0.05-300	001.00	Extension of 1st. dead time for single and three phase reclosure (only effective, if a logical 1 is applied to the Extend_t1 input). Increment in steps of 0.01 s
T_DEAD2	REAL [s]	0.05-300	001.20	2nd. dead time. Increment in steps of 0.01 s
T_DEAD3	REAL [s]	0.05-300	005.00	3rd. dead time. Increment in steps of 0.01 s
T_DEAD4	REAL [s]	0.05-300	060.00	4th. dead time. Increment in steps of 0.01 s
T_OPER	REAL [s]	0.05-300	000.50	Maximum duration of a fault for which a reclosure attempt is made. Increment in steps of 0.01 s
T_INHIBIT	REAL [s]	0.05-300	005.00	Period (CB recovery time) after re-closing during which another trip causes definitive trip. Increment in steps of 0.01 s
T_CLOSE	REAL [s]	0.05-300	000.25	Duration of CB close signal. Increment in steps of 0.01 s
T_DISCRIM_1P	REAL [s]	0.10-300	000.60	Evolving fault discrimination time for single phase reclosure. Increment in steps of 0.01 s
T_DISCRIM_3P	REAL [s]	0.10-300	000.30	Evolving fault discrimination time for three-phase reclosure. Increment in steps of 0.01 s

Parameter	Type/ [unit]	Usable range	Default	Description
T_TIMEOUT	REAL [s]	0.05-300	001.00	Period after the dead time during which the close_CB signal must occur. If this is not the case, the Def_Trip signal is generated. Increment in steps of 0.01 s
T_AR_BLOCK	REAL [s]	0.05-300	005.00	Time during which reclosure is blocked. t_AR_Block is started by every blocking signal (Ext_Blk_AR or Cond_Blk_AR). Increment in steps of 0.01 s

4.4 Timing diagrams

The diagrams only show unsuccessful reclosure attempts. In the case of a successful attempt:

- the close signal would reach its full length
- the reclaim time would start at the end of the close signal
- the definitive trip would not be generated.

Table 2: Acronyms and definitions

TRIP_CB	single phase trip by the protection function
TRIP_CB_3P	three phase trip by the protection function
START	protection function pick-up
CLOSE_CB	closing signal to the circuit-breaker
ZEXTENSION	overreach/underreach control signal (logical 1 for over-reaching enabled)
DEF_TRIP	CB trips and remains locked out
FIRST_AR_1P	first single phase reclosure cycle running
SECOND_AR	2nd. three phase reclosure cycle running
THIRD AR	3rd. three phase reclosure cycle running
AR_IN_PROG	function in operation
AR_READY	function ready for a reclosure cycle
AR BLOCKED	function blocked
T_DEAD_2	2nd. dead time before three phase reclosure
T_DEAD_3	3rd. dead time before three-phase reclosure
T_INHIBIT	reclaim time
T_OPER	default duration beyond which no reclosure takes place

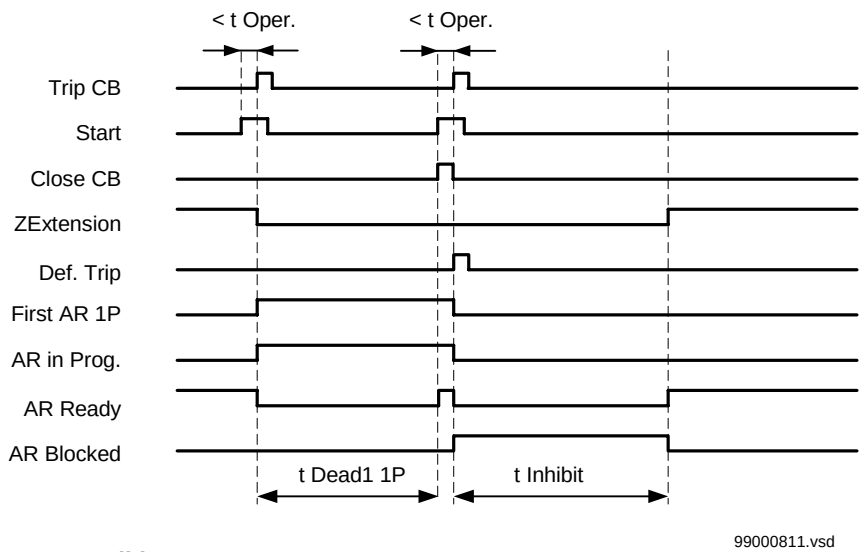

Conditions:
single phase, ZE_AR_1_REACH set to FALSE

Figure 8: Timing diagram for one reclosure cycle

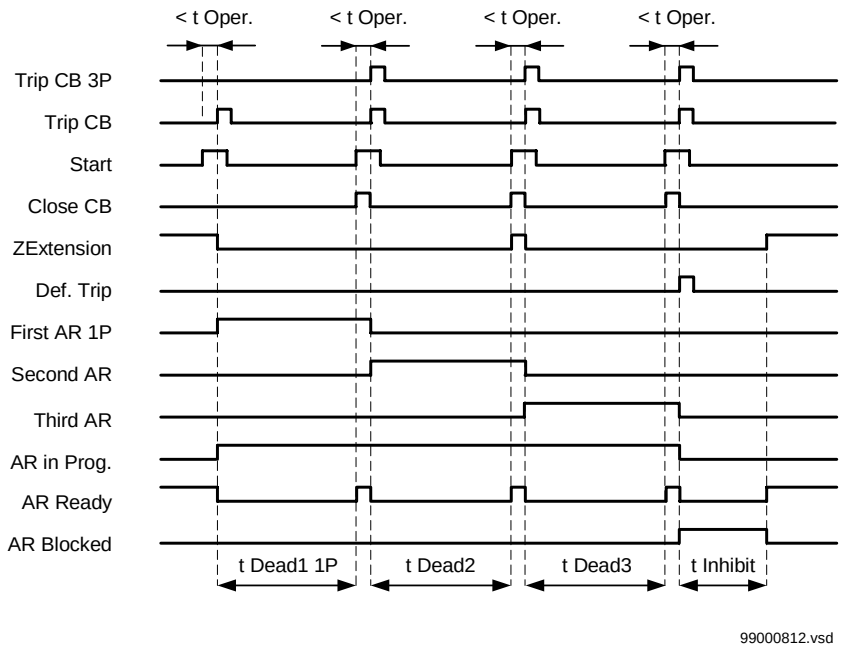

Conditions:
FIRST_AR_1P, SECOND_AR, THIRD_AR, ZE_PREFAULT, ZE_AR_1 FALSE, ZE_AR_2 on, ZE_AR_3 FALSE).

Figure 9: Timing diagram for three phase autoreclosure

1 Application

The synchrocheck function is designed for applications where the conditions prevailing between two parts of a power system have to be checked before it is permissible to connect them in parallel. It is intended to control a circuit-breaker in substations with double busbars and 1½ breaker configurations.

The function performs a full check of the differences between the voltages, phase-angles and frequencies or simply checks for voltage on the two sides of the circuit-breaker. The full synchrocheck function is necessary to parallel two power systems that are both live, while a simple voltage check is needed when one power system is live and the other is not.

2 Theory of operation

2.1 Features

- Controlling a circuit-breaker in substations with double busbars and 1½ breaker configurations.
- No additional hardware required.
- All the features of the terminal are available.
- Multiple usage.
- Supervision of the synchronization criteria:
  Check of differences in amplitude, frequency and phase angle of single-phase voltages
  Determination of these variables based on a circuit comprising a bandpass filter and A/D converter.
- Voltage supervision:
  Three-phase voltage measurement (single-phase reference voltage)
  Calculation of the r.m.s. values following a bandpass filter and A/D conversion.
- Adjustable voltage supervision for paralleling a live power system with a dead power system.
- Supervision of the line orientated current transformer.
- Provision for displaying the values of all inputs and outputs.
- Switching between four sets of settings.
- Local control via local machine interface.
- Inputs for blocking and bypassing the synchrocheck function.
- Programming of the synchrocheck function when engineering a scheme using a function plan programming language according to the IEC 1131.

The effective zero-crossings (t_0) of the voltage signals are determined by linearly interpolating the sample values before and after each zero-crossing (t_1 and t_1+t_s). The frequency and phase-angle differences are then determined by comparing the resulting signals.

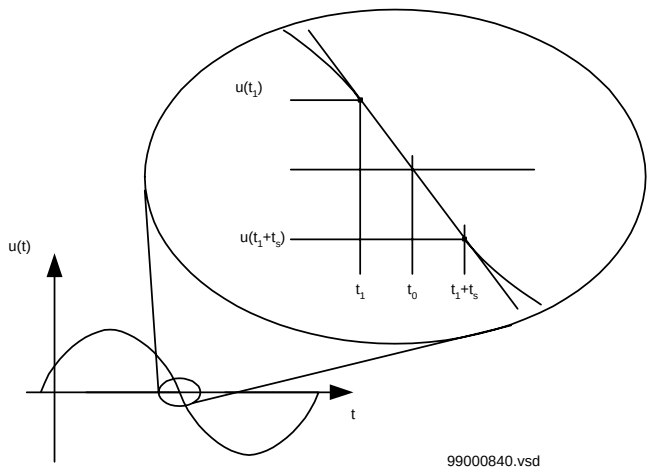

Figure 1: Zero-crossing detection and linear approximation of the effective zero-crossing

2.2 Voltage supervision operating modes

The voltage supervision function integrated in the synchrocheck device enables a live or dead power system to be connected to a dead power system. The voltages of the line and the ring bus are declared to be live or dead in relation to the parameters *Umax*, *Umin* and additionally the reset ratio defining parameters *ResetRatioUmax* and *ResetRatioUmin*. The voltage supervision function can operate in the following modes as determined by the status of the user input parameter *VoltageCheckMode*:

- No paralleling for dead line or dead ring bus.
- Paralleling for live line and dead ring bus.
- Paralleling for dead line and live ring bus.
- Paralleling for live line and dead ring bus or dead line and live ring bus.
- Paralleling for dead line and dead ring bus.

The assignment of the subnetworks (line, ring bus) depends on the busbar transfer with the user inputs *UL_Active*, *UB1_Active* and *UB2_Active*.

The following figure shows the ranges in which the line or ring bus is deemed to be live, respectively dead (settings *ResetRatioUmin* and *ResetRatioUmax* = 100%). The default settings of *Umax*=0.3*U_n and *Umin*=0.7*U_n are assumed. The parameters *Umax* and *Umin* can be set within the minimum and maximum limits. Voltages higher than U_n are also considered to be live. Voltages smaller than 0.1*U_n are considered to be dead.

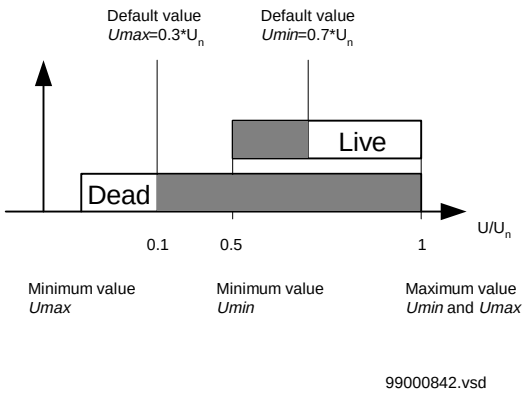

Figure 2: Definition of the voltage limits

An overlapping of the parameters *Umax* and *Umin* can be configured (i.e. *Umax*=0.7*U_n and *Umin*=0.6*U_n). Therefore a subnet assigned as live and dead. In configuring an overlapping of these values no disturbance of the functionality is caused, but has to avoided in general.

2.3 Continuous mode

In the continuous mode, the synchrocheck device enables or disables a CB close command issued by a control device (FUP). The synchrocheck function controls the control device which is directly connected to the CB. In this mode, the interlock signal from the synchrocheck device becomes

active when the criteria for synchronization (ΔU, Δf and ΔPhi) and the voltage supervision condition are fulfilled for at least the duration of the check time (t_{Check}). The command signal is inactive as long as the synchronization criteria are not fulfilled. The check period is determined by the setting for the parameter t_{Check} .

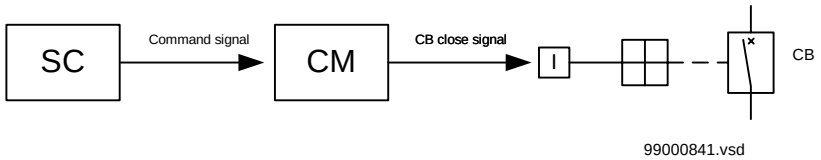

Figure 3: Block diagram of the synchrocheck device (SC) an control module (CM) in the continuous mode

2.4 Busbar transfer

At maximum three sub-nets could be involved for the synchrocheck.

- three phase voltage of the feeder
- one phase voltage of the first reference voltage
- one phase voltage of the second reference voltage

The sub-nets to checked by the synchrocheck are defined by the busbar transfer:

- feeder and first reference voltage
- feeder and second reference voltage
- first and second reference voltage

The verification of the synchronism of the first and second reference voltage is used in switchgear with 1½ breaker configurations.

The busbar transfer is made by the user inputs *UL_Active*, *UB1_active* and *UB2_Active*.

2.5 Multiplication of the synchrocheck function

2.5.1 Multiplication by hardware

Two slots are foreseen for each analog input module 500AIM02 and the mixed transformer module in the basic and the extension rack.

Maximum configurations of the synchrocheck:

- Two analog input modules and mixed transition modules in the basic rack and the extension rack.

2.6 Response times

The response time t_{OpCont} between the change in a process variable (AI) and the generation of the corresponding control signal to the circuit-breaker (BO) is determined by the following.

- AI module processing time
- Data transfer time to the processor unit
- CPU processing time (FUP)
- Data transfer time to the BO module
- BO module processing and command output time

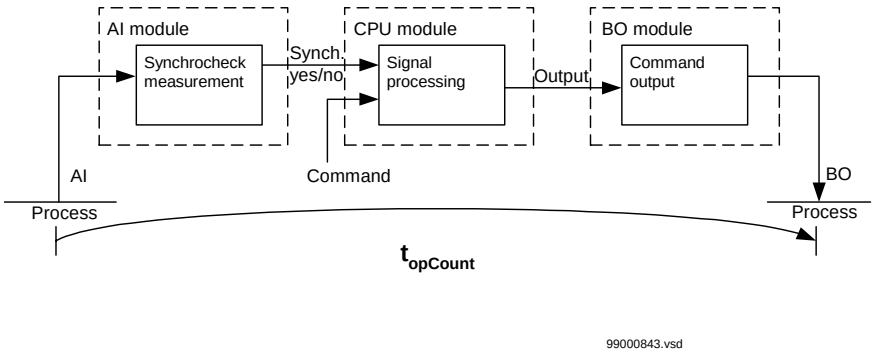

Figure 4: Definition of the response time t_{OpCont} in the continuous mode

3 Design

The synchrocheck function is based on the 500AIM02 analog input module. The analog measured variables obtained from the main VT's are applied to the input transformer module 500MTM02 which reduces them to a level of ±10V. The module 500MTM is connected via the analog bus on the backplane to the analog input module 500AIM02, in which after a band-pass filter and A/D conversion, the RMS values are calculated and zero-crossing detectors and linear approximation determine the differences of voltage, phase-angle and frequency. The analog input module is connected to the processor unit 500CPU03 via the process bus, which is engineered to take account of the user inputs in the function plan. Depending on the operating mode, the circuit-breaker is controlled via the binary output module 500BOM01 either by the processor unit 500CPU03 or directly by the analog input module 500AIM02 connected to the VME bus. The binary input module 500BIM01 provides facility for connecting the m.c.b's in the VT circuits.

3.1 Block diagram of the synchrocheck function

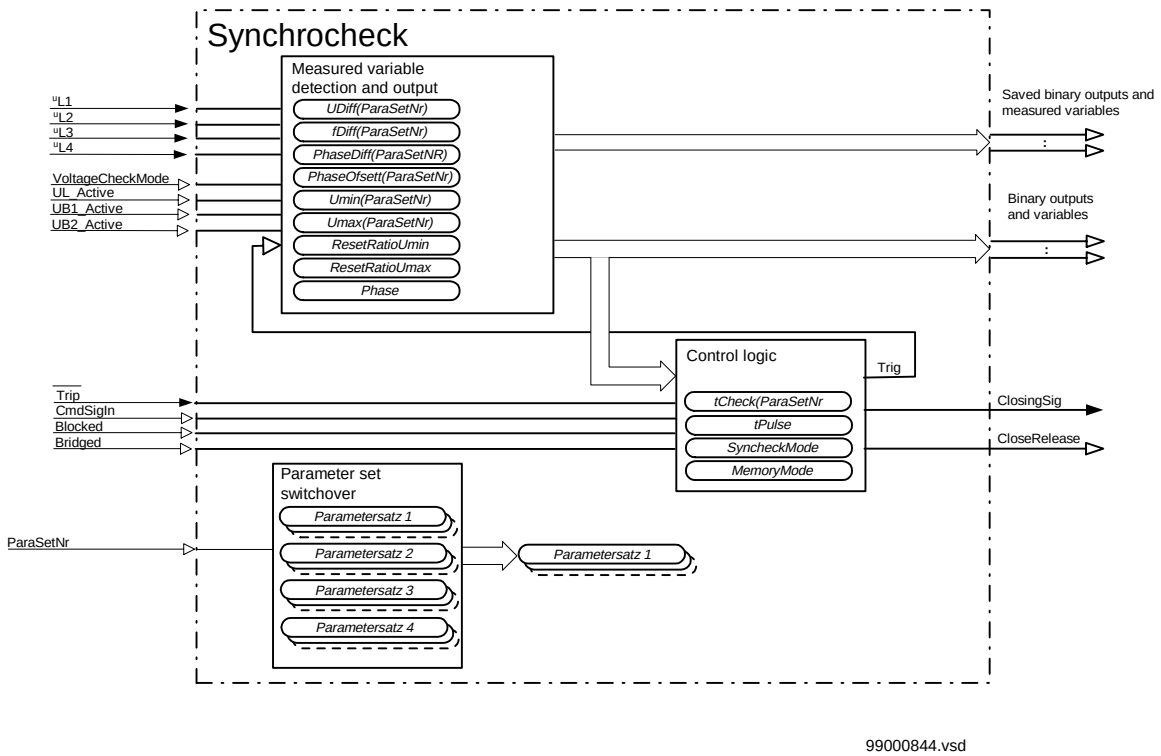

Figure 5: Block diagram of the synchrocheck function

3.1.1 Measurement input and output function block

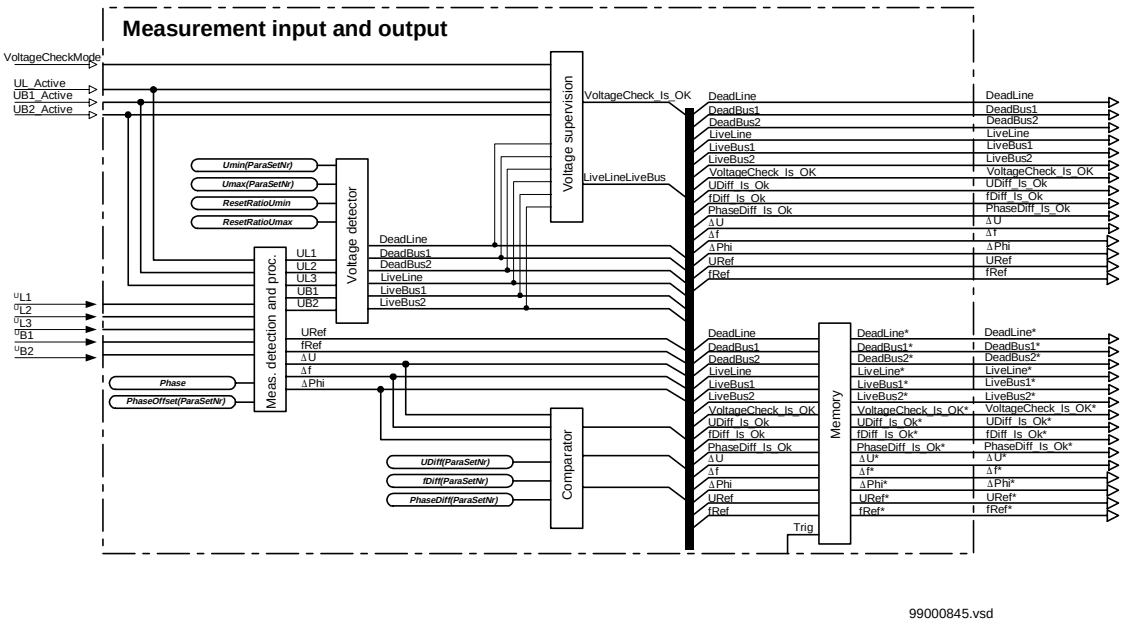

Figure 6: Measurement detection and output function block

3.1.1.1 Measurement detection and processing

Following a bandpass filter and A/D conversion, the measurement input and processing function block determines the r.m.s. values of the analog input variables u_1, u_2, u_3 u_{B1} and u_{B2} and then determines the voltage, phase-angle and frequency differences between them by detecting the respective zero-crossings using a detector operating with linear approximation. The setting of the parameter *Phase* determines which input variable is compared with the reference voltage of the ring busbar.

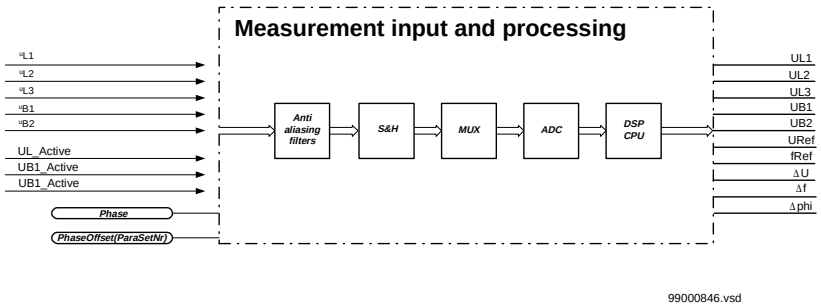

Figure 7: .Measurement input and processing function block

For the application in isolated networks (with earth faults) phase-to-phase voltages are processed internally.
The calculation of the voltage, phase and frequency difference and also the calculation of the rms value and frequency of the reference voltage depends on the busbar transfer with the user inputs UL_Active, UB1_Active and UB2_Active.
The verification of the synchronism between the line and a reference is

defined by the parameter *Phase* (designation of the phase of the line current).
In case of missing configuration information for the busbar transfer with the user inputs UL_Active, UB1_Active and UB2_Active the calculated values (URef, fRef, ΔU, Δf and ΔPhi) will be set on the maximum. The calculation of the phase difference still depends on the parameter *PhaseOffset* to compensate a constant phase shift.

The following table displays how values are calculated for three cases, synchrocheck between UB1 and UB2 (line 1), between UL and UB1 (line 2), and between UL and UB2 (line 3).

Table 1: Definitions depending on the busbar transfer

UL_active	UB1_active	UB2_active	U_{Ref}	f_{Ref}	ΔU	Δf	Δφ
FALSE	TRUE	TRUE	U_{B1}	f_{B1}	$U_{B2} - U_{B1}$	$f_{B2} - f_{B1}$ [a]	$\varphi_{B2} - \varphi_{B1} - Ph_{off}$ [a]
TRUE	TRUE	FALSE	U_{B1}	f_{B1}	$U_{Ln} - U_{B1}$ [a]	$f_{Ln} - f_{B1}$ [a]	$\varphi_{Ln} - \varphi_{B1} - Ph_{off}$ [a]
TRUE	FALSE	TRUE	U_{B2}	f_{B2}	$U_{Ln} - U_{B2}$ [a]	$f_{Ln} - f_{B2}$ [a]	$\varphi_{Ln} - \varphi_{B2} - Ph_{off}$ [a]
FALSE	FALSE	FALSE	All at maximum value[b]				
FALSE	FALSE	TRUE					
FALSE	TRUE	FALSE					
TRUE	FALSE	FALSE					
TRUE	TRUE	TRUE					

a. Use the parameter PHASE to select phase.

b. For voltage and frequency, the maximum value is 327.25% of U_n or f_n respectively. For phase angle, the maximum angle is 180.00°

The analog input variables are sampled at a frequency of 1000 Hz (50 Hz) or 1200 Hz (60 Hz).

3.1.2 Voltage detection function block

The voltage detection function block builds the user outputs LiveLine, LiveBus1, LiveBus2, DeadLine, DeadBus1 and DeadBus2 dependent on the parameters *Umax* and *Umin* for the voltage limits and the parameters *ResetRatioUmax* and *ResetRatioUmin* for the reset ratios.

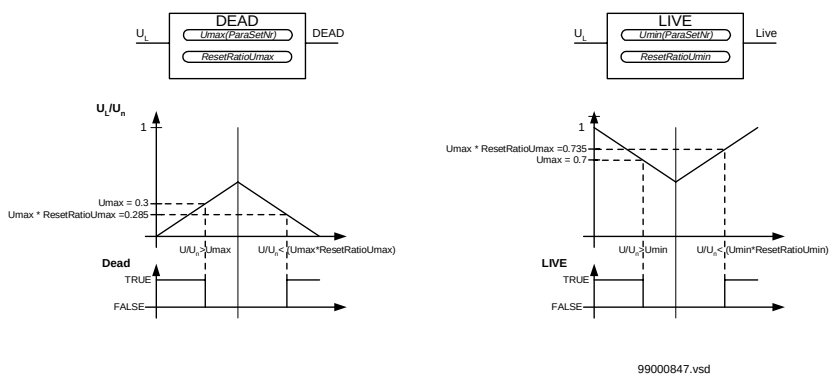

Figure 8: Definition of voltage detection

The user outputs LiveLine and DeadLine were build by the three of the line currents.

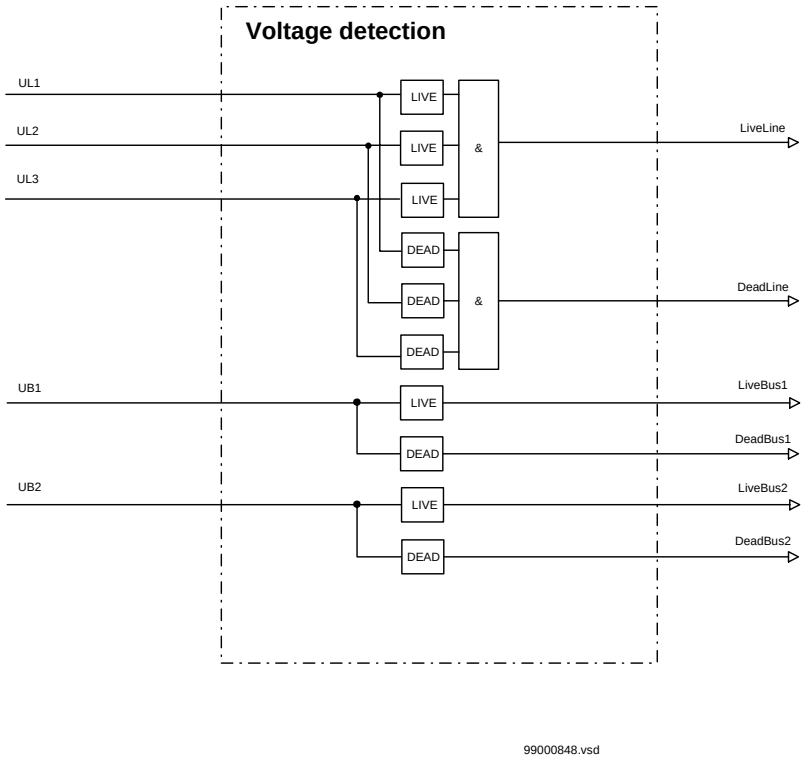

Figure 9: Function block voltage detection

3.1.2.1 Voltage supervision block

In accordance with its set operating mode, the voltage supervision function block generates the criterion (Voltag_Check_Is_OK) for enabling the paralleling of a live and a dead power system on the basis of the inputs LiveLine, DeadBus, DeadLine and LiveBus. The operating mode of the voltage supervision function is determined by the status of the user input VoltageCheckMode (LLDB, DLLB, LLDB_DLLB, NONE).

The integrated voltage supervision enables the paralleling of a dead and a dead or a live and a dead power system. The function block voltage supervision processes the user input VoltageCheckMode (function block VCM) and builds dependent on the busbar transfer with the user inputs UL_Active, UB1_Active and UB2_Active (function block SSU) together with LiveLine, LiveBus1, LiveBus2, DeadLine, DeadBus1 and DeadBus2 the criteria for paralleling of the power networks (Voltage_Check_Is_Ok).

The function block also provides the criterion live bus and live line (LiveLineLiveBus) as the condition for performing the synchrocheck function.

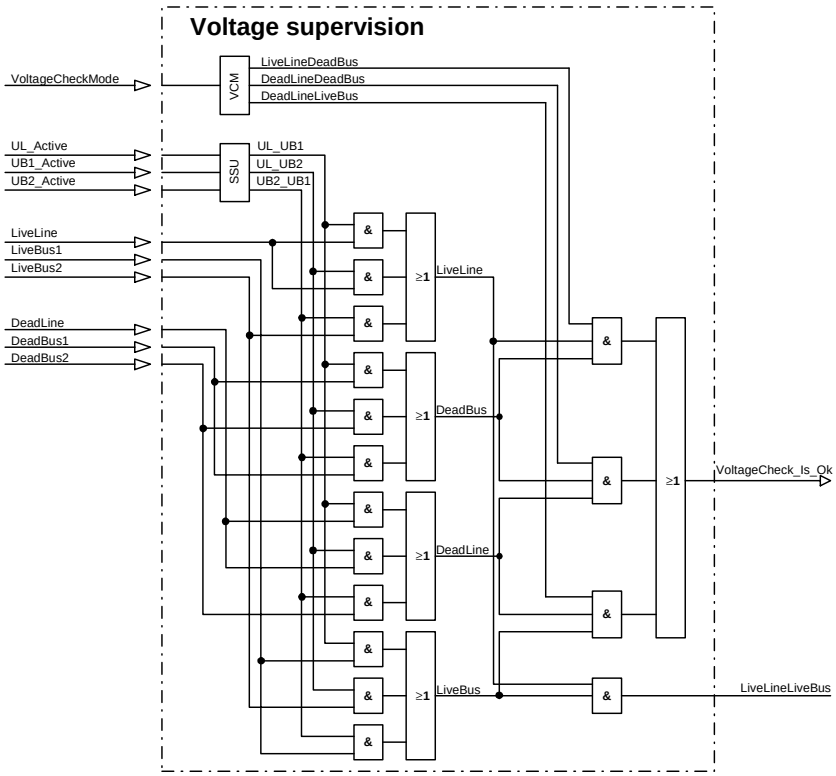

Figure 10: Function block voltage supervision

The function block SSU defines dependent on the busbar transfer with the user inputs UL_Active, UB1_Active and UB2_Active, the power networks to be checked for synchronism. In case of no clear choice of the two power networks the function will be blocked (see next table).

Table 2: Behavior of function block SSU

UL_Active	UB1_Active	UB2_Active	UL_UB1	UL_UB2	UB2_UB1	Description
FALSE	TRUE	TRUE	FALSE	FALSE	TRUE	Synchrocheck between u_{B1} und u_{B2}
TRUE	TRUE	FALSE	TRUE	FALSE	FALSE	Synchrocheck between u_L und u_{B1}
TRUE	FALSE	TRUE	FALSE	TRUE	FALSE	Synchrocheck between u_L und u_{B2}
FALSE	FALSE	FALSE	FALSE	FALSE	FALSE	Blocking of the synchrocheck function
FALSE	FALSE	TRUE	FALSE	FALSE	FALSE	Blocking of the synchrocheck function
FALSE	TRUE	FALSE	FALSE	FALSE	FALSE	Blocking of the synchrocheck function
TRUE	FALSE	FALSE	FALSE	FALSE	FALSE	Blocking of the synchrocheck function
TRUE	TRUE	TRUE	FALSE	FALSE	FALSE	Blocking of the synchrocheck function

The following table shows the response of the operating mode function block. For example, in the voltage supervision operating mode VoltageCheckMode = 2 (LLDB_DLLB), the two outputs LiveLineDeadBus and DeadLine LiveBus of the operating mode function block are active and the paralleling of a live line (LiveLine) and a dead bus (DeadBus) or a dead line (DeadLine) and a live bus (LiveBus) is enabled.

Table 3: Behavior of the function block VCM

VoltageCheckMode		LiveLineDeadBus	DeadLineLiveBus	DeadLineDeadBus
0	LLDB	TRUE	FALSE	FALSE
1	DLLB	FALSE	TRUE	FALSE
2	DLDB	FALSE	FALSE	TRUE
3	LLDB_DLLB	TRUE	TRUE	FALSE
4	NONE	FALSE	FALSE	FALSE

The verify the synchronism between the first and the second reference voltage (UL_Active = FALSE, UB1_Active = TRUE, UB2_Active = TRUE => UB2_UB1 = TRUE) the second reference voltage is designed as line and the first reference voltage is designed as bus to build up the user output Voltage_Check_Is_Ok.

Table 4: Definition for the voltage supervision

UL_UB1	UL_UB2	UB2_UB1	LiveLine	DeadLine	LiveBus	DeadBus	Description
TRUE	FALSE	FALSE	LiveLine	DeadLine	LiveBus1	DeadBus1	Synchrocheck between u_L und u_{B1}
FALSE	TRUE	FALSE	LiveLine	DeadLine	LiveBus2	DeadBus2	Synchrocheck between u_L und u_{B2}
FALSE	FALSE	TRUE	LiveBus2	DeadBus2	LiveBus1	DeadBus2	Synchrocheck between u_{B2} und u_{B1}

3.1.3 Comparator function block

The comparator function block compares the voltage, frequency and phase-angle differences with the set maximum values and generates the criteria for synchronism UDiff_IS_OK, fDiff_Is_OK and

PhaseDiff_Is_OK. The corresponding outputs of the function block are active, providing the differences are less than the settings of the respective parameters.

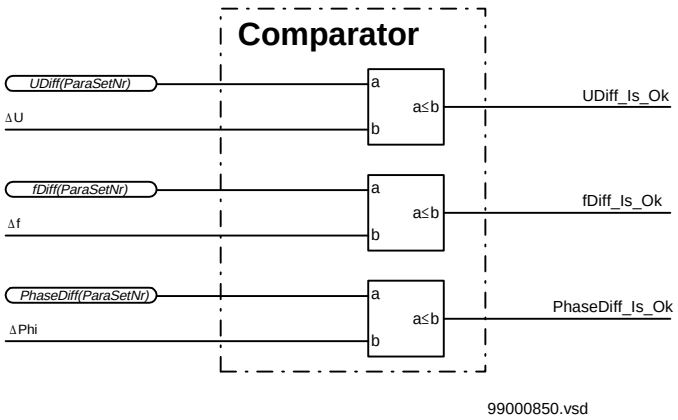

Figure 11: : Comparator function block

3.1.3.1 Memory function block

When a positive-going edge is applied to the control input “Trig” of the memory function block, the statuses of the binary outputs and the values of the measured variables are saved until the next positive-going edge.

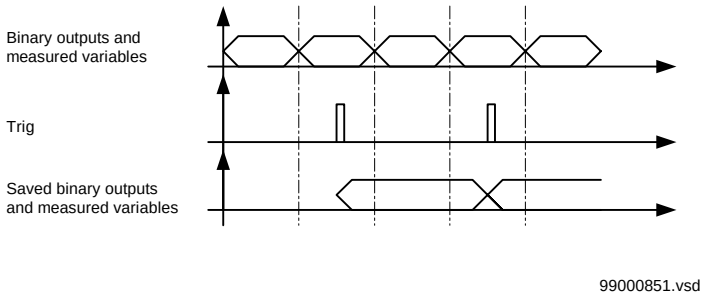

Figure 12: Response of the memory function block

3.1.4 Control logic function block

The control generates the user output CmdSigOut and the process output ClosingSig.

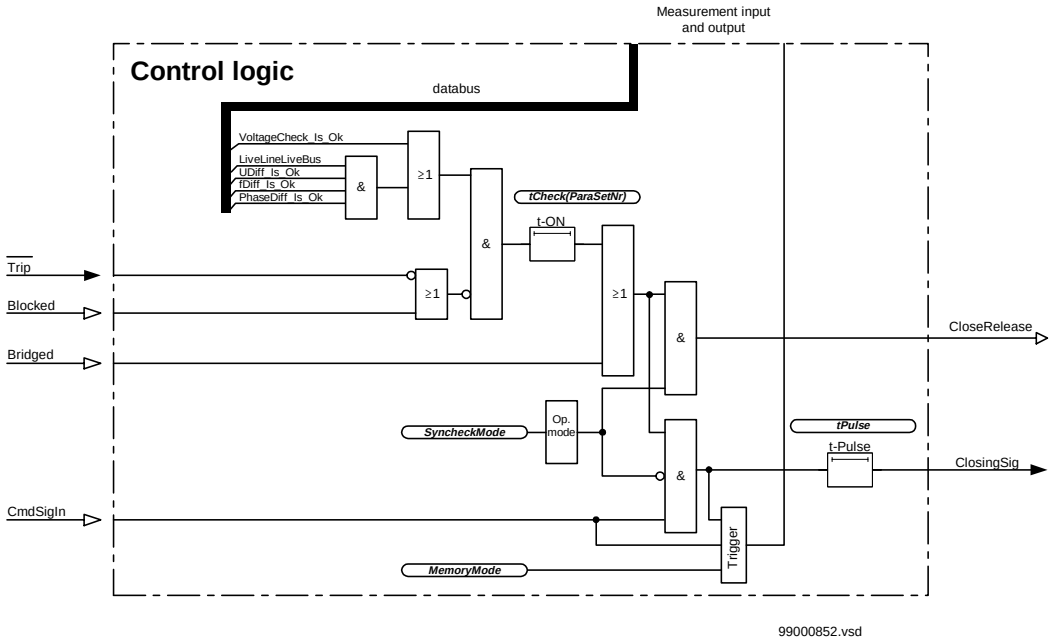

Figure 13: Control logic function block

Depending on the setting of the parameter *MemoryMode*, the trigger function block generates the trigger signal for the memory function block on the basis of the user input CmdSigIn and the process output ClosingSig. In the memory operating modes UNSUCC and SUCC_UNSUCC, the memory function block is triggered when the user input CmdSigIn is reset without the process output ClosingSig ever being active (unsuccessful CB close command).

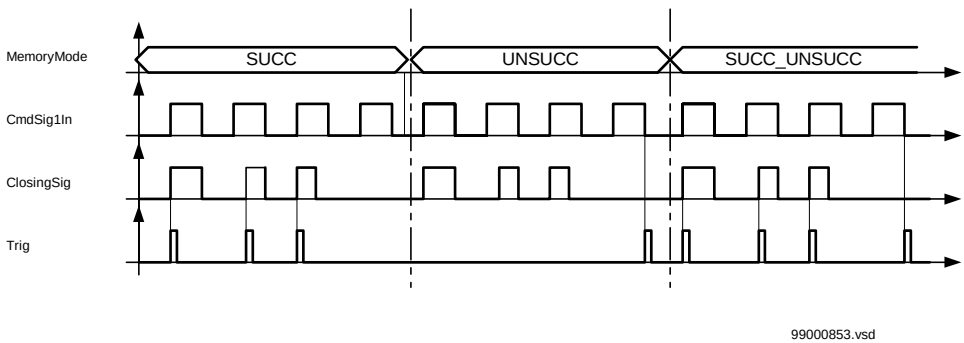

Figure 14: Response of the trigger function block

3.1.5 Parameter set switch-over function block

Depending on the setting of the user input ParaSetNr, the parameter set switch-over function block enables and disables the various sets of parameter settings.

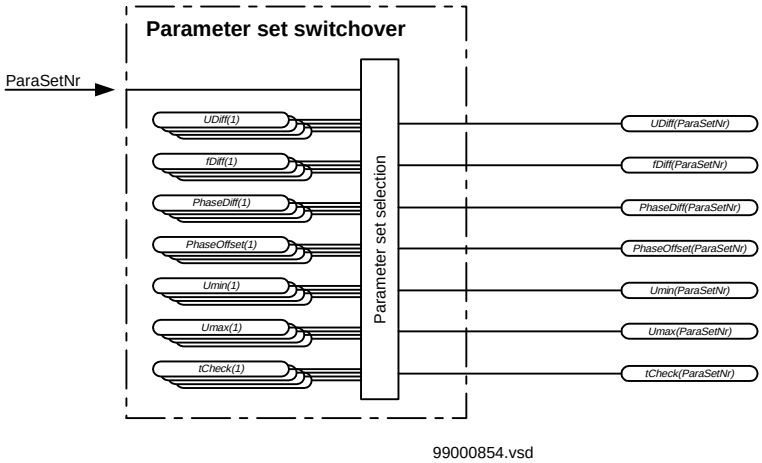

Figure 15: Parameter set switch-over function block

4 Appendix

4.1 Signal list

Signal	Type	In/out	Description
UL1	REAL	In	Phase 1 of the synchrocheck-function of the feeder oriented voltage.
UL2	REAL	In	Phase 2 of the synchrocheck-function of the feeder oriented voltage.
UL3	REAL	In	Phase 3 of the synchrocheck-function of the feeder oriented voltage.
UB1	REAL	In	The first reference voltage; (phase-to-phase ore phase-to ground)
UB2	REAL	In	The second reference voltage; (phase-to-phase ore phase-to ground)
TRIP	BOOL	In	Supervision of the feeder orientated current transformers.
BLOCKED	BOOL	In	Blocking
BRIDGED	BOOL	In	Bridge over
VOLTAGECHECKMODE	INT	In	Voltage supervision.
UL_ACTIVE	BOOL	In	Input for busbar transfer
UB1_ACTIVE	BOOL	In	Input for busbar transfer
UB2_ACTIVE	BOOL	In	Input for busbar transfer
PARASETNR	INT	In	Select set of parameters.
CLOSERELEASE	BOOL	Out	Enabling signal for the CB close command in the continuous mode
DEADLINE	BOOL	Out	Dead line signal
DEADBUS1	BOOL	Out	Dead busbar signal
DEADBUS2	BOOL	Out	Dead busbar signal
LIVELINE	BOOL	Out	Live line signal
LIVEBUS1	BOOL	Out	Live busbar signal
LIVEBUS2	BOOL	Out	Live busbar signal
VOLTAGECHECK_IS_OK	BOOL	Out	Voltage supervision condition fulfilled
UDIFF_IS_OK	BOOL	Out	Amplitude difference in permissible range signal
FDIFF_IS_OK	BOOL	Out	Frequency difference in permissible range signal
PHASEDIFF_IS_OK	BOOL	Out	Phase-shift in permissible range signal
DEADLINE*	BOOL	Out	Available for future application. Do not use
DEADBUS1*	BOOL	Out	Available for future application. Do not use
DEADBUS2*	BOOL	Out	Available for future application. Do not use
LIVELINE*	BOOL	Out	Available for future application. Do not use
LIVEBUS1*	BOOL	Out	Available for future application. Do not use
LIVEBUS2*	BOOL	Out	Available for future application. Do not use
VOLTAGECHECK_IS_OK*	BOOL	Out	Available for future application. Do not use
UDIFF_IS_OK*	BOOL	Out	Available for future application. Do not use
FDIFF_IS_OK*	BOOL	Out	Available for future application. Do not use

Signal	Type	In/out	Description
PHASEDIFF_IS_OK*	BOOL	Out	Available for future application. Do not use
U_DELTA	REAL	Out	Amplitude difference measurement
F_DELTA	REAL	Out	Frequency difference measurement
PHI_DELTA	REAL	Out	Phase-shift measurement
UREF	REAL	Out	Reference voltage amplitude measurement
FREF	REAL	Out	Reference voltage frequency measurement
U_DELTA*	REAL	Out	Available for future application. Do not use
F_DELTA*	REAL	Out	Available for future application. Do not use
PHI_DELTA*	REAL	Out	Available for future application. Do not use
UREF*	REAL	Out	Available for future application. Do not use
FREF*	REAL	Out	Available for future application. Do not use

4.2 Settings table

Parameter	Type/ [unit]	Usable range	Default	Parameter description
UDiff[a]	REAL [pu]	0.05-0.40	0.20	Maximum permissible difference between the voltage amplitudes of two power systems, expressed as a magnitude of rated voltage.
fDiff[a]	REAL [Hz]	0.01-0.50	0.20	Maximum permissible difference between the frequencies of two power systems
PhaseDiff[a]	REAL [degr]	1-80	10	Maximum permissible phase-shift between two power systems
PhaseOffset[a]	REAL [degr]	-179-180	0	Offset value for phase for compensation of a constant phase shift
Umax[a]	REAL [pu]	0.1-1.00	0.30	Lower voltage limit below which a subnet is declared to be dead, expressed as a magnitude of rated voltage.
Umin[a]	REAL [pu]	0.50-1.00	0.70	Upper voltage limit above which a subnet is declared to be live, expressed as a magnitude of rated voltage.
ResetRatioUmax	REAL	0.90-1.00	0.95	Reset ratio of the pickup of the parameter *Umax*
ResetRatioUmin	REAL	1.00-1.10	1.05	Reset ratio of the pickup of the parameter *Umin*
tCheck[a]	TIME [s]	0.01-30.00	0.2	Duration of synchronism checking period
Phase	INT	0-5	3	Selection of which of the three phase voltages of the line shall be compared with the single-phase reference voltage. 0: L1-Ground 1: L2-Ground 2: L3-Ground 3: L1-L2 4: L2-L3 5: L3-L1

Parameter	Type/ [unit]	Usable range	Default	Parameter description
SyncheckMode	INT	0	0	Selection of synchrocheck operating mode. 0: Continuous

a. The parameter can exist in more than one instance depending on the selected parameter set. Use the input PARASETNR to select a parameter set.

4.3 Wiring diagram

The following figure shows the external connections to the terminal that are required by the synchrocheck device in the case of double busbars for two phase-to-phase reference voltages.

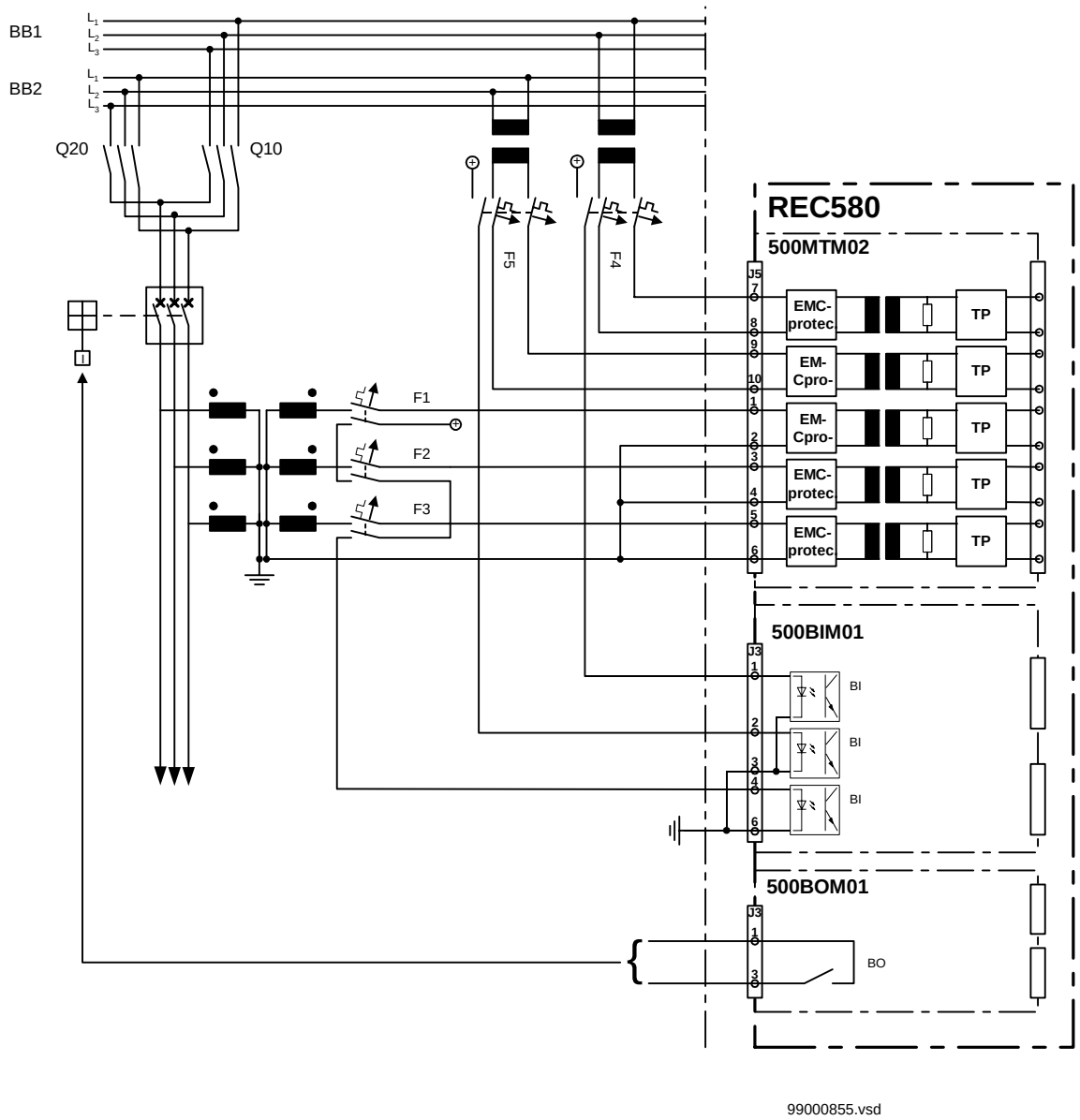

Figure 16: Wiring diagram for a synchrocheck device connected to two phase-to-phase voltages of the busbar

1 Application

Use the additional configurable logic function blocks to:

- convert between binary coded decimal and integers.
- convert between binary coded booleans and integers.
- create pulses and oscillating signals.

2 Design

2.1 BCD8_I (C6000)

2.1.1 Function

The element converts binary coded decimal code (BCD) to integer.

The following table shows the decimal values of the binary inputs In1..In8.

Table 1: Decimal values of the binary inputs in BCD8_I

In1	In2	In3	In4	In5	In6	In7	In8
1	2	4	8	10	20	40	80

2.1.2 Supervision

When converting data which cannot be represented as binary coded decimal code (BCD), the error signal output will be set. The output for converted data is undefined.

2.2 I_BCD8 (C6001)

2.2.1 Function

The element converts integers to binary coded decimal code (BCD).

The following table shows the decimal values of the binary outputs Out1..Out8.

Table 2: Decimal values of the binary outputs in I_BCD8

Out1	Out2	Out3	Out4	Out5	Out6	Out7	Out8
1	2	4	8	10	20	40	80

2.2.2 Supervision

When converting data from integers to binary coded dcimal code (BCD), the numbers are restricted to 0 to 99. If the integer value to be converted exceeds the value which can be represented at the outputs, the error signal output is set. The outputs for converted data are undefined.

2.3 I_1of32 (C6002)

2.3.1 Function

The element converts integers to 1-of-N code.

2.3.2 Supervision

When converting data from integers to 1-of-N code, the numbers are restricted to 0 to 32. If the integer value to be converted exceeds the value which can be represented at the outputs, the error signal output is set. In this case the outputs for converted data are set to zero.

2.4 1of32_I (C6003)

2.4.1 Function

The element converts 1-of-N code to integer.

2.4.2 Supervision

When converting data from 1-of-N code to integer, the setting of only one of the inputs In1..In32 is supervised. If two or more inputs are set, the value with the lowest number is shown at the output and the error signal output is set.

2.5 B8_I (C6010)

2.5.1 Function

Converts eight binary coded booleans to an integer.

$$OUTPUT = B1 \cdot 2^0 + B2 \cdot 2^1 + B3 \cdot 2^2 + B4 \cdot 2^3 + B5 \cdot 2^4 + B6 \cdot 2^5 + B7 \cdot 2^6 + B8 \cdot 2^7$$

2.6 I_B8 (C6011)

2.6.1 Function

Converts an integer to eight binary coded booleans.

$$INPUT = B1 \cdot 2^0 + B2 \cdot 2^1 + B3 \cdot 2^2 + B4 \cdot 2^3 + B5 \cdot 2^4 + B6 \cdot 2^5 + B7 \cdot 2^6 + B8 \cdot 2^7$$

2.6.2 Supervision

Allowed input values are zero to 255, otherwise error is set to one and all B-outputs are set to zero.

2.7 B16_I (C6012)

2.7.1 Function

Converts sixteen binary coded booleans to an integer.

$$OUTPUT = B1 \cdot 2^0 + B2 \cdot 2^1 + B3 \cdot 2^2 + B4 \cdot 2^3 + B5 \cdot 2^4 + B6 \cdot 2^5 + B7 \cdot 2^6 + B8 \cdot 2^7 + B9 \cdot 2^8 + B10 \cdot 2^9 + B11 \cdot 2^{10} + B12 \cdot 2^{11} + B13 \cdot 2^{12} + B14 \cdot 2^{13} + B15 \cdot 2^{14} + B16 \cdot 2^{15}$$

2.8 I_B16 (C6013)

2.8.1 Function

Converts an integer to sixteen binary coded booleans.

$$INPUT = B1 \cdot 2^0 + B2 \cdot 2^1 + B3 \cdot 2^2 + B4 \cdot 2^3 + B5 \cdot 2^4 + B6 \cdot 2^5 + B7 \cdot 2^6 + B8 \cdot 2^7 + B9 \cdot 2^8 + B10 \cdot 2^9 + B11 \cdot 2^{10} + B12 \cdot 2^{11} + B13 \cdot 2^{12} + B14 \cdot 2^{13} + B15 \cdot 2^{14} + B16 \cdot 2^{15}$$

2.8.2 Supervision

Allowed input values are zero to 65 535, otherwise error is set to true and all B-outputs are set to zero.

2.9 PULSE (C6020)

2.9.1 Function

The function block PULSE can be used, for example, for time limiting of operation of outputs or for impulse extension with a subsequent configurable detection function of a signal state change caused direct or indirect by the output signal.

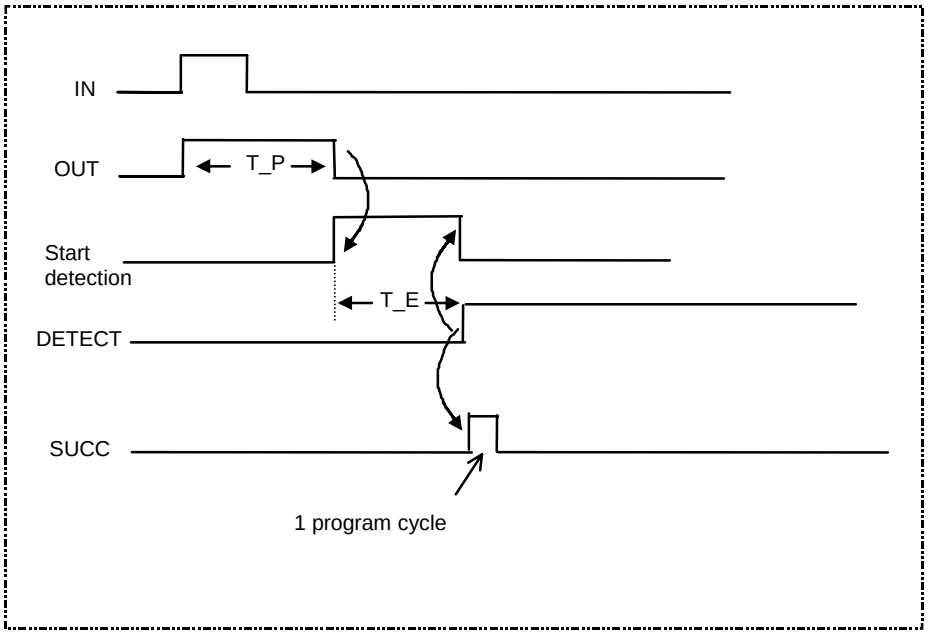

Figure 1: Time diagram PULSE (detection of 0->1 successful during T_D)

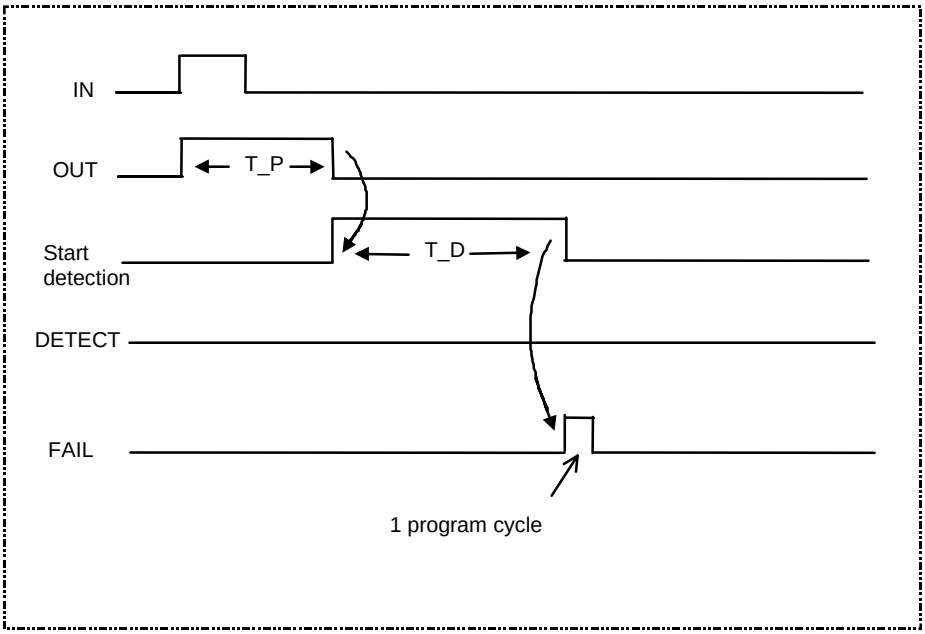

Figure 2: Time diagram PULSE (detection of 0->1 fail during T_D)

2.10 N_PULSE (C6021)

2.10.1 Function

This function generates a pulse of length T_P whenever the input IN changes from 1 to 0.

The function block N_PULSE can be used, for example, for time limiting of operation of outputs or for impulse extension.

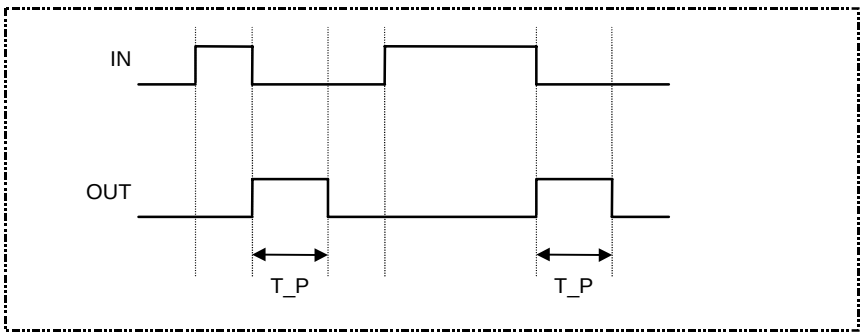

Figure 3: Time diagram N_PULSE

2.11 P_PULSE (C6022)

2.11.1 Function

This function generates a pulse of length T_P whenever the input IN changes from 0 to 1.

The function block P_PULSE can be used, for example, for time limiting of operation of outputs or for impulse extension.

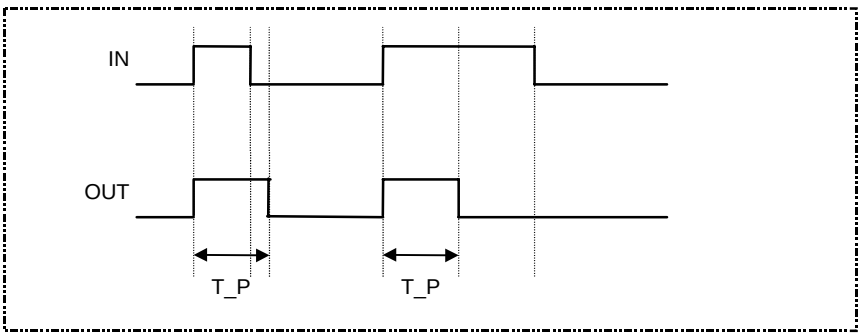

Figure 4: Time diagram P_PULSE

2.12 OSC_B (C6023)

2.12.1 Function

This function generates an oscillating signal as long the input is high.

The function block OSC_B can be used, for example, for visualization of an important indication or alarm on the LED's of the LCP.

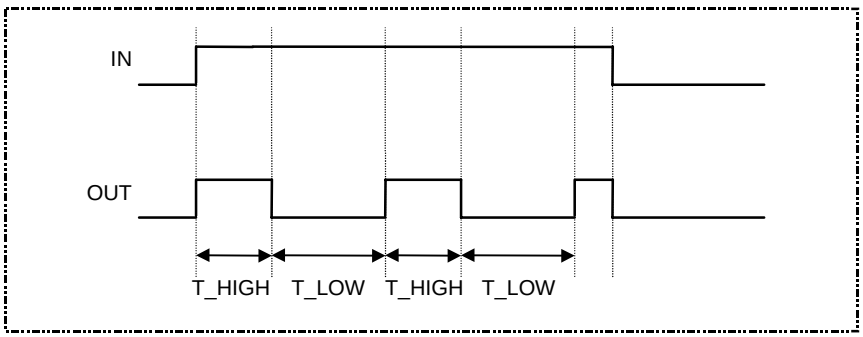

Figure 5: Time diagram OSC_B

3 Appendix

3.1 Function blocks

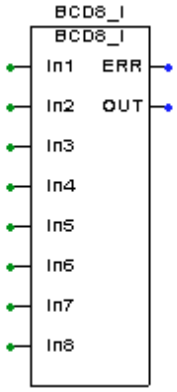

Figure 6: Function block BCD8_I

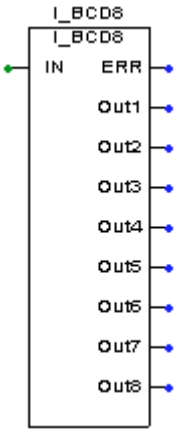

Figure 7: Function block I_BCD8

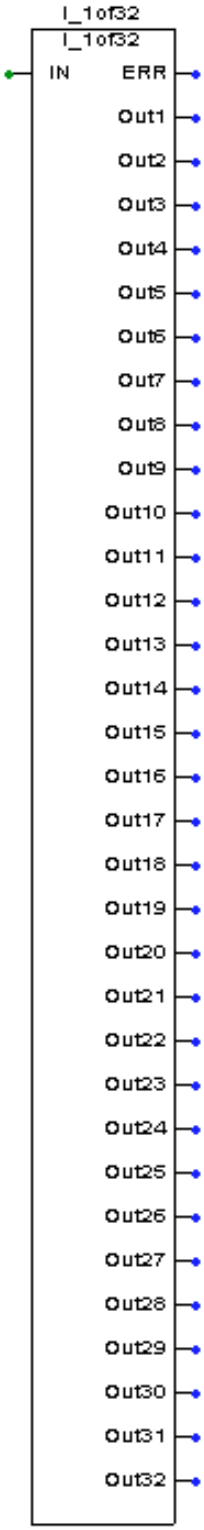

Figure 8: Function block I_1of32

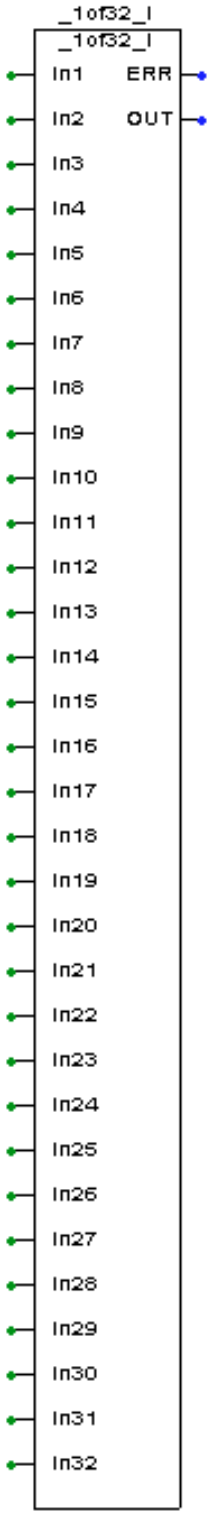

Figure 9: Function block 1of32_I

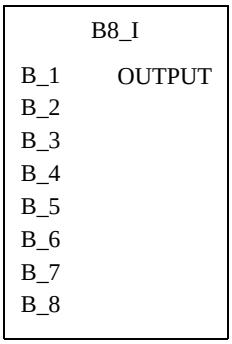

Figure 10: Function block B8_I

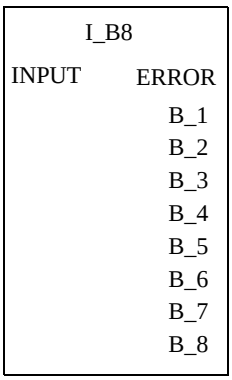

Figure 11: Function block I_B8

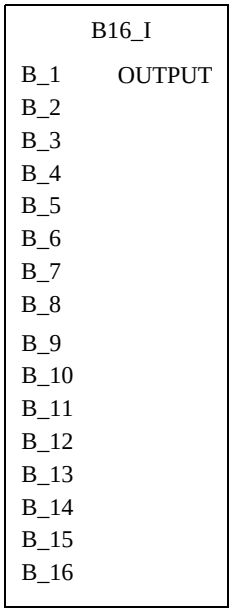

Figure 12: Function block B16_I

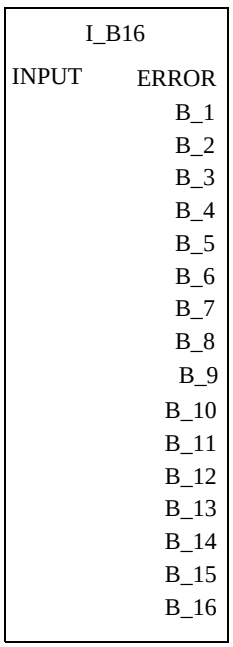

Figure 13: Function block I_B16

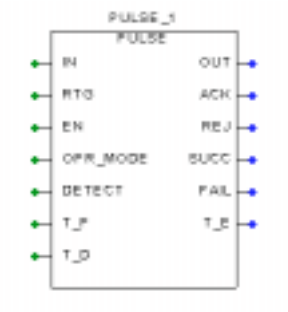

Figure 14: Function block PULSE

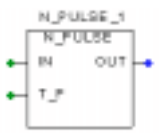

Figure 15: Function block N_PULSE

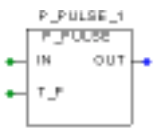

Figure 16: Function block P_PULSE

Figure 17: Function block OSC_B

3.2 Function block diagrams

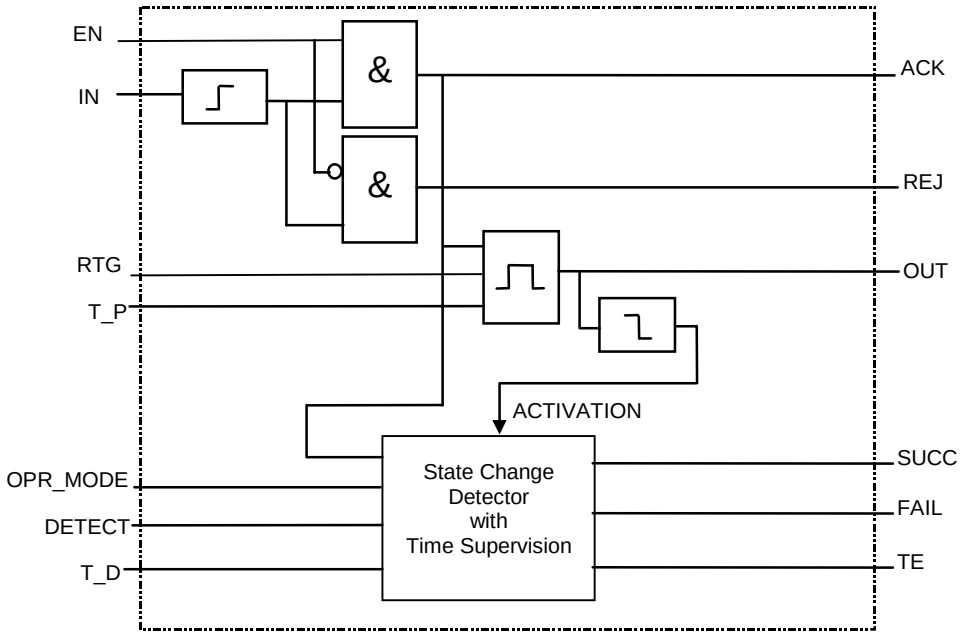

Figure 18: Function block PULSE

3.3 Signal lists

Table 3: Signal list for function block BCD8_I

Signal	Type	In/out	Description
Inx (x=1-8)	BOOL	In	Input x (x=1-8) for BCD
ERR	BOOL	Out	Output which is set, when the input data cannot be represented as BCD-code at the output
OUT	INT	Out	Output for converted data

Table 4: Signal list for function block I_BCD8

Signal	Type	In/out	Description
IN	INT	In	Input for the integer value to be converted
ERR	BOOL	Out	Output which is set, when the integer value to be converted exceeds the value which can be represented at the outputs
Outx (x=1-8)	BOOL	Out	Output x (x=1-8) for BCD

Table 5: Signal list for function block I_1of32

Signal	Type	In/out	Description
IN	INT	In	Input for the integer value to be converted
ERR	BOOL	Out	Output which is set, when the integer value to be converted exceeds the value which can be represented at the outputs
Outx (x=1-32)	BOOL	Out	Output x (x=1-32) for 1-of-N

Table 6: Signal list for function block 1of32_I

Block	Signal	Type	In/out	Description
10f32_I	Inx (x=1-32)	BOOL	In	Input x (x=1-32) for 1-of-N
10f32_I	ERR	BOOL	Out	Output which is set, when the integer value to be converted exceeds the value which can be represented at the outputs
10f32_I	OUT	INT	Out	Output for converted data

Table 7: Signal list for function block B8_I

Signal	Type	In/out	Description
B_x (x=1-8)	BOOL	In	Input x (x=1-8) for binary coded booleans
OUTPUT	INT	Out	Output for converted data

Table 8: Signal list for function block I_B8

Signal	Type	In/out	Description
INPUT	INT	In	Input for the integer value to be converted
ERROR	BOOL	Out	Output which is set, when the integer value to be converted exceeds the value (255) which can be represented at the outputs
B_x (x=1-8)	BOOL	Out	Output x (x=1-8) for binary coded booleans

Table 9: Signal list for function block B16_I

Block	Signal	Type	In/out	Description
B16_I	B_x (x=1-16)	BOOL	In	Input x (x=1-16) for binary coded booleans
B16_I	OUTPUT	INT	Out	Output for converted data

Table 10: Signal list for function block I_B16

Signal	Type	In/out	Description
INPUT	INT	In	Input for the integer value to be converted
ERROR	BOOL	Out	Output which is set, when the integer value to be converted exceeds the value (65535) which can be represented at the outputs
B_x (x=1-16)	BOOL	Out	Output x (x=1-16) for binary coded booleans

Table 11: Signal list for function block PULSE

Signal	Type	In/out	Description
IN	BOOL	In	Input for start of the function, when input changes from 0 to 1
RTG	BOOL	In	Input for selection of if the PULSE function is to be retriggerable or not. If RTG is set, a retriggerable function is obtained.
EN	BOOL	In	Input which activates function block PULSE
OPR_MODE	BOOL	In	See settings table
DETECT	BOOL	In	Input signal from which the state change should be detected according to setting OPR_MODE
T_P	TIME		See settings table
T_D	TIME		See settings table
OUT	BOOL	Out	Output which is set when the PULSE function starts and resets when the time set (T_P) has elapsed. With the reset of the output the sub function for the detection will be activated.
ACK	BOOL	Out	Output which is set for one program cycle when starting input signal (IN) is detected and the enable input (EN) is set to 1.
REJ	BOOL	Out	Output which is set for one program cycle when starting input signal (IN) is detected and the enable input (EN) is set to 0.
SUCC	BOOL	Out	Output which is set for one program cycle when starting input signal (DETECT) is detected during the detection time T_D and the sub function for the detection is activated.
FAIL	BOOL	Out	Output which is set for one program cycle when starting input signal (DETECT) is not detected during the detection time T_D and the sub function for the detection is activated.
T_E	TIME	Out	Output for time which has elapsed when the output SUCC is set. When the detection time set (T_D) has elapsed T_E will reset to zero.

Table 12: Signal list for function block N_PULSE

Signal	Type	In/out	Description
IN	BOOL	In	The function starts, when input changes from 1 to 0
T_P	TIME		See settings table

Table 12: Signal list for function block N_PULSE

Signal	Type	In/out	Description
OUT	BOOL	Out	Output which is set when the N_PULSE function starts and resets when the time set (T_P) has elapsed

Table 13: Signal list for function block P_PULSE

Signal	Type	In/out	Description
IN	BOOL	In	The function starts, when input changes from 0 to 1.
T_P	TIME		See settings table
OUT	BOOL	Out	Output which is set when the P_PULSE function starts and resets when the time set (T_P) has elapsed.

Table 14: Signal list for function block OSC_B

Signal	Type	In/out	Description
IN	BOOL	In	The function starts, when input changes from 0 to 1
T_HIGH	TIME		See settings table
T_LOW	TIME		See settings table
OUT	BOOL	Out	Output which is set when the OSC_B function starts. Output oscillate with the two times T_HIGH and T_LOW and resets when the input changes from 1 to 0.

3.4 Setting tables

Table 15: Settings table for function block PULSE

Parameter	Type/ [unit]	Usable range	Description
OPR_MODE		No detection, detect rising edge, detect falling edge	Input for setting the operation mode. Detection is done on input DETECT. Can only be set from CAP 580 configuration tool.
T_P	TIME [s]		Input for setting the output pulse time. Can only be set from CAP 580 configuration tool.
T_D	TIME [s]		Input for setting the detection time interval. Can only be set from CAP 580 configuration tool.

Table 16: Settings table for function block N_PULSE

Parameter	Type/ [unit]	Description
T_P	TIME [s]	Input for setting the pulse duration. Can only be set from CAP 580 configuration tool

Table 17: Settings table for function block P_PULSE

Parameter	Type/ [unit]	Description
T_P	TIME [s]	Input for setting the pulse duration. Can only be set from CAP 580 configuration tool

Table 18: Settings table for function block OSC_B

Parameter	Type/ [unit]	Description
T_HIGH	TIME [s]	Input for setting the pulse duration during OUT=1. Can only be set from CAP 580 configuration tool
T_LOW	TIME [s]	Input for setting the pulse duration during OUT=0. Can only be set from CAP 580 configuration tool

1 Application

The interbay communication is used for interchange of information between control terminals. The information is exchanged via a LON-bus.

The information that is exchanged between the control terminals are used for the functions included in the terminals.

One main task of the control terminals is to send signals to primary switching equipment in the bay, in order to change the switching state in the power system. To assure power system security and personal safety, it is of great importance that the right maneuvers are made and that the maneuvers are made in the correct sequence. To assure this there are internal interlocking functions in the control terminal. Further there is a reservation function in the control terminal. This means that more than one action can not be executed at the same time. When a maneuver is initiated to a control terminal, all other maneuver possibilities are blocked until the maneuver action is completed. The reservation function can either be local within the bay or it can include some other bays, sections of the substation or the whole substation.

For the interlocking function the switching state (positions) of the different equipment (circuit breakers, line disconnectors, earthing disconnectors, etc.) have to be included in the logic. The switching information for each bay is collected by the corresponding control terminal. Certain apparatuses in a bay may require the switching state of an apparatus in another bay. The switching information is handled via the interbay communication.

For the reservation function, when it includes the other bays, the information of one maneuver in one bay, is sent from the control terminal to perform the maneuver to the control terminals for the bays where maneuvers shall be blocked.

2 Design

The function is realized in two types of functional blocks, namely the SEND function and the RECEIVE function. In each terminal there can be several SEND and RECEIVE blocks. Each SEND block will communicate with one or several RECEIVE blocks in the other terminals. The connection between the blocks in the different terminals are defined in the LON network setup.

2.1 SEND

The SEND function block is used to transmit information from the own bay to the other bays.

Each variable in the bay, that shall be transmitted to the other bays, are defined as boolean variables. An example can be a boolean variable where true indicates that the circuit breaker of the bay is closed. Several boolean input variables are input signals to one SEND block. In the SEND block up to 16 input boolean variables are converted into a binary integer. The SEND block also has a DELAY_TIME input, where the integer to be sent will be sent to the other bays with a time delay between the sendings equal to the TIME_DELAY input.

2.2 RECEIVE

The RECEIVE function block is used for reception of information from the other bays to the own bay.

An integer is received from a SEND block in another terminal. In the RECEIVE block this integer is transferred to up to 16 binary coded booleans. There is also an input: VALID_TIME. After a change of the input value the valid bit will be true for a period of the adjustable interval time.

3 Appendix

3.1 Function blocks

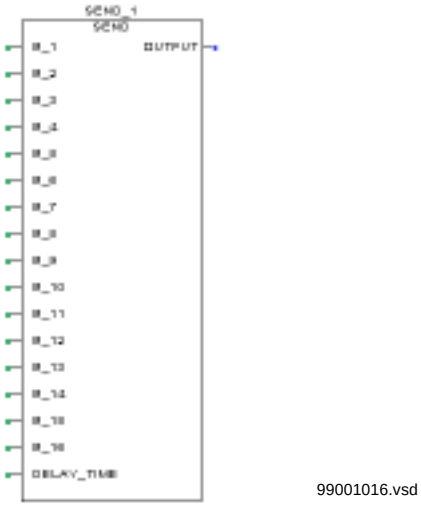

Figure 1: The SEND function block

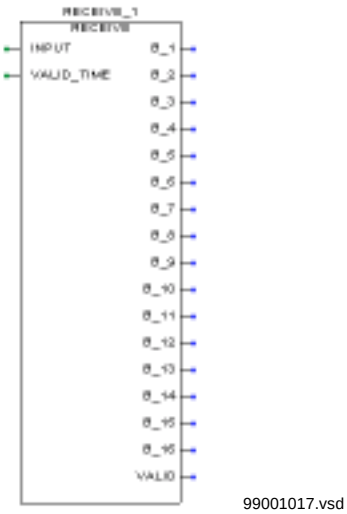

Figure 2: The RECIEVE funtion block

3.2 Signal lists

Table 1: Signa list for the function block SEND

Signal	Type	In/Out	Description
B_1	BOOL	In	First data bit for network variable packing
B_2...B_15	BOOL	In	Data bits for network variable packing
B_16	BOOL	In	Last data bit for network variable packing
DELAY_TIME	TIME	In	Time after which the inputs are converted to OUTPUT

Table 1: Signa list for the function block SEND

Signal	Type	In/Out	Description
OUTPUT	INT	Out	Converted inputs B1 ... B_16 into integer format

Table 2: Signal list for the function block RECIEVE

Signal	Type	In/Out	Description
INPUT	INT	In	Packed network variables content
VALID_TIME	TIME	In	Time after which the inputs are converted to OUTPUT
B_1	BOOL	Out	First data bit from network variable unpacked
B_2...B_15	BOOL	Out	Data bits from network variable unpacked
B_16	BOOL	Out	Last data bit from network variable unpacked
VALID	BOOL	Out	Change of the input value the valid bit will be true for a period of VALID_TIME

1 Application

With the event recording function can the user define which signal and status changes that shall be handled as events. The function handles both the binary and analog signals.

2 Theory of operation

When a change in a signal is detected, it has to be transferred as an event to the next higher control level. The data transfer functions must fulfil the following requirements:

- They have to be able to transfer data to several communication servers or station control servers.
- No event may be lost.
- Recording of further events must not be impaired during data transfer.

As far as the generation and transfer of events is concerned, actual process signals and calculated process signals are treated in the same way. Figure 1 illustrates how events are generated from binary and analog signals.

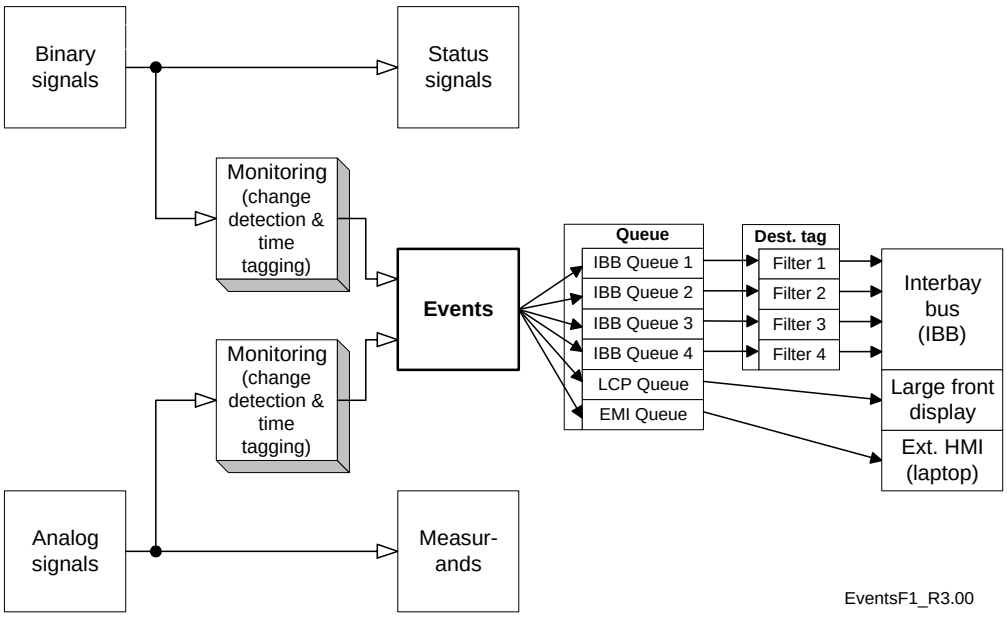

Figure 1: Generation of events from different signal sources
IBB Queue 1-4:
corresp. to station servers' log-in at the bay unit (session 1-4)
Filter 1-4:
correspond to a destination server for a particular event
LCP Queue:
for event indication on the large front display
EMI Queue:
for event indication an external PC connected to the front of REC 580

3 Design

3.1 Generation of events

Before a process signal can generate events, a name must be assigned to it and the type of signal change that generates an event has to be defined.

In the case of a binary signal, a choice can be made between generating an event on a positive-going edge (logical “0” to logical “1” transition), a negative-going edge (logical “1” to logical “0” transition) or on both edges.

The configuration defining the generation of events is made by parameter settings for each queue (size and overflow strategy, Table 1), and for each event (event text, selection of the queues, Table 2).

3.2 Buffering and transmission of events

Event data is transferred from a bay unit to a communication server or station control server in a data telegram which is initiated by the occurrence of the event itself, i.e. data transfer is event-controlled. Therefore an event data telegram must always include a time stamp.

For transfer to the station level servers the events are stored in volatile buffers (queues) of configurable size.

Provision is made in the bay unit for configuring which queues have to be available. The following queues can be configured:

- IBB Queue 1
- IBB Queue 2
- IBB Queue 3
- IBB Queue 4
- EMI Queue
- LCP Queue

IBB Queue 1 to 4 signify the log-in sessions with the respective communication servers or station control servers, EMI and LCP an external local control unit (laptop) or the large display installed in the bay unit.

Event telegrams can be transferred to a maximum of 4 communication servers and/or station control servers (IBB Queue 1-4, see Figure 1), provision being made for addressing each telegram to a particular one (Filter 1-4). No distinction is made at the bay unit level, whether an event is transferred to a communication server or a station control server.

Events are sent to all IBB queues. In addition the event is put in the LCP and EMI queues respective of the corresponding enable parameter setting (Table 2). A station server logging in at an IBB queue (“session”) may set a filter information 0, 1, 2, 3 or 4 in the bay unit. Filter 0 means that all events in the queue are sent to the station server (standard), while filters 1-4 effect that only events tagged with the corresponding filter information are transferred from this queue to the IBB.

3.3 Failure of a station level unit

Bay units cannot send event telegrams to a communication server or station control server that is out of operation. A bay unit detecting that a server has failed deletes all the events in the corresponding queue.

Once a server that was out of operation becomes available again, it sends a general data request telegram (General Interrogation, GI) to actualize its status information.

Upon a GI events are generated in the bay unit representing the actual process status information. This means that for the relevant process signals both the positive-going and the negative-going edge events have to be configured. For the double-point indications these are the intermediate, open, closed and disturbed events, accordingly. For the measurands it is the delta value event that must be configured to transfer the actual value.

3.4 Length of the event queue

The length of an event queue in a bay unit is sufficient for at least 200 values.

The length of every queue in a bay unit can be individually configured up to a total for all the queues of 1000 event telegrams.

3.5 Event queue overflow

There is a choice of three responses to a queue overflow:

1. Save the oldest event telegrams:
   If this response is set, all subsequent events are not recorded once a queue is full.
2. Save the most recent event telegrams:
   If this response is set, the oldest events are successively deleted as soon as new events arrive.
3. Save the oldest and the most recent event telegrams:
   In this case, a configurable number of old events and the most recent events are saved. Should an overflow occur, the set number of old events is retained and the older ones deleted.

The desired response to an overflow can be individually set for each bay unit queue.

A queue overflow itself generates an event which is transferred to the next control level up.

3.6 Time synchronisation

The time for time stamping is synchronised in all the units via the interbay bus.

4 Appendix

4.1 Settings tables

Table 1: Settings for each queue

Parameter	Range	Unit	Default	Description
Size	1 .. 1000 The sum of all queue sizes together cannot exceed 1000 events.	Events	500 (IBB queues) 500 (LCP queue) 500 (EMI queue)	Maximum queue length (number of events) IBB = Interbay bus (LON) LCP = Local contol panel (large front HMI) EMI = External machine interface (laptop, e.g.)
Number of Kept Events	0 .. 1000	Events	0 (all queues)	Number of the oldest events to be retained in the case of an overflow “Keep Oldest and Most Recent”
Overflow Strategy	Keep the Oldest Keep the Most Recent Keep Oldest and Most Recent	-	Keep the Most Recent (all queues)	Method selection for keeping events when a queue over-flow occurs

Table 2: Settings for each event derived from binary signals or measurands

Parameter	Range	Unit	Default	Description
Event Status Text	Max. 20 ASCII characters	-	-	Event text for EMI and LCP

Table 2: Settings for each event derived from binary signals or measurands

Cause for Event	Event from binary signal: • (0) Negative Going • (1) Positive Going • (2) Change of Quality Attribute Event from a double-point indication: • (0) INTERMEDIATE • (1) OPEN • (2) CLOSED • (3) DISTURBED • (4) Change of Quality Attribute Event from a measurand: • (0) Higher Zone->Zone 1 • (1) Lower Zone->Zone 2 • (2) Higher Zone->Zone 2 • (3) Lower Zone->Zone 3 • (4) Higher Zone->Zone 3 • (5) Lower Zone->Zone 4 • (6) Higher Zone->Zone 4 • (7) Lower Zone->Zone 5 • (8) Higher Zone->Zone 5 • (9) Lower Zone->Zone 6 • (10) Change of Quality Attribute • (11) Delta value	Choice	Corresponding to the kind of event	Setting options for the cause of which the event shall be generated
Filter 1	False True	-	False	Sets the destination tag Filter 1 if True
Filter 2	False True	-	False	Sets the destination tag Filter 2 if True
Filter 3	False True	-	False	Sets the destination tag Filter 3 if True
Filter 4	False True	-	False	Sets the destination tag Filter 4 if True
EMI Queue	False True	-	False	If True the event will be put in the EMI queue
LCP Queue	False True	-	True	If True the event will be put in the LCP queue

1 Application

This section describes the counter and metering processing functions in the bay units. The types of counters and meters concerned are:

- incremental counters for binary signals
- meters for measuring power

The acquisition of the corresponding signals and measurements takes place in the bay units. Provision is made for counting the binary signals and for computing the power values directly from the primary system measurements. The results are 32 bit values.

Counter and metering values are transferred at configurable intervals and the counters and meters can be either reset or left as they are after transfer. The telegrams with the data are time stamped at the instant they were saved ready for transfer.

2 Operating principle and design

Impulses generated by external power meters are acquired through binary inputs of 500BIM01 or 500BIO01. After the normal pre-processing (see Section “Signal processing”) for binary signals a pulse counter function adds the impulses and generates a 32 bit measured variable (counter value).

The primary system values for metering are obtained from the measurements performed by the analogue input unit 500AIM02. After pre-processing of the voltage and current measured variables a function block (AIM_Multi) calculates the kWhs (see Section “Analogue measurements”). The power measured variable then passes a signal scaling block to attach scaling information.

Thereafter the processing of the counter impulses and the digitised metering values is the same. Figure 1 shows the processing chain. The transfer mode can be set for each signal individually.

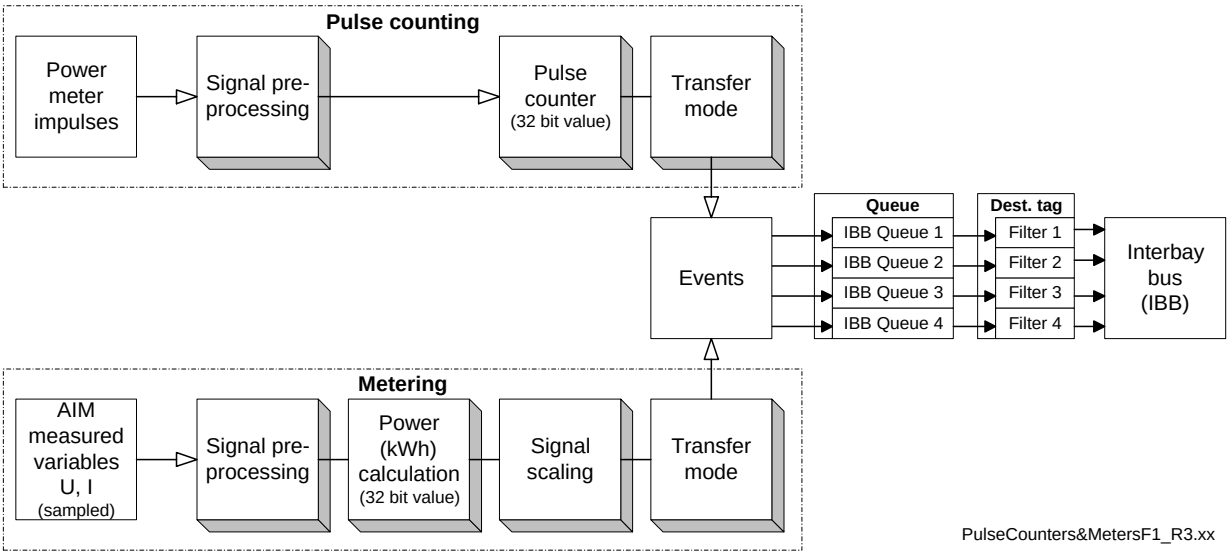

Figure 1: Processing steps for pulse counting and metering

2.1 Incremental counters

2.1.1 Signal acquisition

In the case of the counters, one binary input can be used for counting upwards or/and downwards. A single binary input can be connected to different counters.

A binary input either increments or decrements a counter by 1. Whether the positive or negative-going edge or both edges activate a counter is determined by the configuration. In the case of both edges, the counter is incremented, respectively decremented by each successive edge.

Where two inputs have been configured for upwards and downwards counting and both signals coincide, the counter does not change at all.

2.1.2 Start

When the bay unit is switched on, the counter is at zero. No provision is made for entering a starting value or setting the counter to a particular value.

2.1.3 Overflow

The counter restarts at zero should an over or underflow occur. An overflow is signalled the next time a counter value is transferred (see 2.3.2).

2.1.4 Representation

The counter and metering values are represented as a 32 bit number in the range -2^{31} .. $2^{31}-1$.

2.1.5 Counter clock frequency

The counter clock frequency is in the range 0 .. 25 Hz which corresponds to a minimum pulsewidth of 20 ms.

2.1.6 Integrity

The signals acquisition circuits are designed such that no impulses can be lost.

2.1.7 Accuracy

Counters counting the impulses from the same impulse generator via different binary inputs deviate by a maximum of 1 count.

2.1.8 Design

Each binary counter consists of a signal acquisition function in the binary input unit 500BIM01 or 500BIO01, respectively, and a counting function in the central processor unit 500CPU03.

The counters can be assigned to any of the binary inputs for counting upwards or downwards and they can be read and reset via the central processor unit.

Apart from the actual counting function, the central processor unit also performs the following :

- supervises overflow and counter integrity
- transfers the counter readings to the higher control levels

2.2 Power meter

2.2.1 General

Power and energy values are calculated by the bay units from the primary voltages and currents applied to the analogue input unit.

The energy values determined by the bay units, however, are not sufficiently accurate for billing purposes.

An explanation of the implications and implementation of measuring power and energy is given in Section “Analog measurements”.

The transfer of power and energy measurements to the next control level up is performed in the same way as for the binary counters.

2.2.2 Calculation of scaling factors

The metered power value tansferred to upper system levels can be scaled in terms of kWh per digit. To make the metering function correctly assign the metered power to the “kWh per digit” value scaling factors considering the ratio of instrument transformers and REC 580 input channel chararacteristics must be set. The setting procedure for the parameters in Table 2 and the calculation formulas are described in the following.

Step 1 Energy_per_Digit

Choose the metered power that shall correspond to one digit of the transferred metering value.

Step 2 Primary voltage

Choose the primary voltage reference value which will be used in the following calculation formula. Normally the primary system rated voltage is chosen.

Step 3 Primary current

Choose the primary current reference value which will be used in the following calculation formula. Normally the primary system rated current is chosen.

Step 4 Voltage scaling

This setting is obtained from the following formula:

(Equation 1)

$$U_{AIM_U} = U_p \cdot \frac{U_{s_VT}}{U_{p_VT}} \cdot \frac{1}{U_{r_MTM} \cdot MR_u} \cdot \frac{10V}{\sqrt{2}}$$

Legend Equation 1:

U_{AIM_U}	Scaling factor [V] (setting parameter): Voltage measured at the input of 500AIM02 when U_p is applied to the primary system side
U_p	Primary voltage reference value (phase-to-ground voltage) [V] (setting parameter)
U_{p_VT}	Main voltage transformer primary rating (phase-to-ground voltage) [V]
U_{s_VT}	Main voltage transformer secondary rating (phase-to-ground voltage) [V]
U_{r_MTM}	Rated voltage of input transformer unit 500MTM02 [V] (63.51V / 120V / 220V, default 63.51V)
MR_u	Measuring range of 500MTM02 (default = 2 U_{r_MTM})
V, [V]	Volts rms

Step 5 Current scaling

This setting is obtained from the following formula:

(Equation 2)

$$U_{AIM_I} = I_p \cdot \frac{I_{s_CT}}{I_{p_CT}} \cdot \frac{1}{I_{r_MTM} \cdot MR_i} \cdot \frac{10V}{\sqrt{2}}$$

Legend Equation 2:

U_{AIM_I}	Scaling factor [V] (setting parameter): Voltage measured at the input of 500AIM02 when I_p is applied to the primary system side
I_p	Primary current reference value [A] (setting parameter)
I_{p_CT}	Main current transformer primary rating [A]
I_{s_CT}	Voltage transformer secondary rating [A]
I_{r_MTM}	Rated current of input transformer unit 500MTM02 [A] (1A / 5A, default 1A)
MR_i	Measuring range of 500MTM02 (1.6 I_{r_MTM} for metering, 70 I_{r_MTM} for protection, default = 1.6 I_{r_MTM})
V, [V]	Volts rms
[A]	Amps rms

Step 6 Plausibility check

This check must be made to assure that “Energy_per_digit” value setting is not below the resolution of the metered power value. The following condition must be fulfilled:

(Equation 3)

$$E_{p_1Digit} \geq Energy_Base_Value$$

where

E_{p_1Digit}	Primary power per digit of the transferred metering value [Wh]

and

(Equation 4)

$$Energy_Base_Value = \frac{U_p[V] \cdot I_p[A]}{U_{AIM_U}[V] \cdot U_{AIM_I}[V]} \cdot \frac{1h \cdot 200 \cdot V \cdot V}{4800 \cdot 3600}$$

Legend Equation 4:

U_p	Primary voltage reference value, phase-to-ground voltage (setting parameter)
I_p	Primary current reference value (setting parameter)
U_{AIM_U}	Scaling factor [V] (setting parameter): Voltage measured at the input of 500AIM02 when U_p is applied to the primary system side (obtained from Equation 1)
U_{AIM_I}	Scaling factor [V] (setting parameter): Voltage measured at the input of 500AIM02 when I_p is applied to the primary system side (obtained from Equation 2)

<u>Example calculation:</u>

Step 1 Energy_per_Digit

Energy_per_Digit = 1000 Wh (setting = 100)

Step 2 Primary voltage

$$U_p = 110kV/\sqrt{3} \approx 63510V$$

Step 3 Primary current

I_p = 500 A

Step 4 Voltage scaling

Main vt ratings:

$$U_{p_HW} = 110kV/\sqrt{3} \approx 63510V$$
$$U_{s_HW} = 110V/\sqrt{3} \approx 63.51V$$

$$U_{AIM_U} = 63510V \cdot \frac{63.51V}{63510V} \cdot \frac{1}{63.51V \cdot 2} \cdot \frac{10V}{\sqrt{2}} = 3.536V$$

Step 5 Current scaling

Main ct ratings:

$$I_{p_HW} = 500A$$
$$I_{s_HW} = 1A$$

$$U_{AIM_I} = 500A \cdot \frac{1A}{500A} \cdot \frac{1}{1A \cdot 1.6} \cdot \frac{10V}{\sqrt{2}} = 4.419V$$

Step 6 Plausibility check

$$Energy_Base_Value = \frac{63510V \cdot 500A}{3.536V \cdot 4.419V} \cdot \frac{1h \cdot 200 \cdot V \cdot V}{4800 \cdot 3600}$$
$$= 23.52Wh$$

and

$$E_{p_1Digit} = 1000Wh \geq Energy_Base_Value = 23.52Wh$$

The necessary condition is fulfilled.

2.3 Transferring counter and metering values

Counter and metering values are transferred via the interbay bus as events. Depending on the transfer mode settings at every intermediate and end period an event is generated. These events are handled in the same way as all the other events, see Section “Event processing”. An indication of energy values on the local HMI of the bay unit is possible based on special application software engineering.

Once a counter or metering value has been established, it has to be transferred to the next level up. To enable this to be done, the transfer procedure provides the following:

- The transfer of the values is time-controlled at a configurable rate (period) with or without resetting the counter or meter (end-of-period reading (EOP) and intermediate reading (IR)).

2.3.1 Data transfer

A time stamp is attached to all counter and metering values.

Counter and metering values can be transferred to a maximum of four communication gateways or station control HMI units. Provision is also made for addressing a counter or metering value to a specific communication gateway or HMI unit.

2.3.2 Status information

In accordance with the IEC 870-5-101 format, the following status information is provided when processing counter and metering values in the bay units:

- IV: Value valid/invalid
  This parameter is set when disturbed process signals or hardware are detected (e.g. the failure of a module) during counter or metering value acquisition.
- CA: Counter was reset
  This parameter is set when the corresponding counter or metering value was reset during the preceding period.
- CY: Overflow/underflow in the last period
  This parameter is set when an over or underflow of the corresponding counter or metering value was detected during the preceding period.
- IT: Time invalid
  This parameter is set when the bay unit is not synchronised or receives an incorrect time for a transfer request.

2.3.3 Storage of counter and metering values

Counter and metering telegrams are stored in a queue in the bay unit and are only deleted after they have been successfully transferred to their respective communication gateways or station control HMI units.

Counter and metering telegrams that are received by a server are also put into a queue. Should this queue become full, no more telegrams are accepted and they remain stored in the queue in the bay unit until space is cleared in the server queue (tail-back of counter and metering values in the bay unit).

For configuring the event queues, setting the queue length and overflow strategy, and defining to which of the respective communication gateways or station control HMI units the counter or metering values have to be sent, see Section “Event processing”.

2.3.4 Time synchronisation

To ensure that counter and metering values are transferred to the respective intermediate register at the same time, the bay units are synchronised to absolute time.

2.4 Time-controlled data transfer

2.4.1 Periodic transfer between queues

The timing control for periodically transferring counter and metering telegrams is performed in the bay units. Before a telegram is transferred, the current counter or metering value is transferred to an intermediate register. The corresponding counter or meter can either be reset (EOP) or not reset (IR) after the data is transferred. A separate period can be configured for each of the two possibilities, providing the EOP period is a multiple of the IR period. The time stamp attached to a counter or metering telegram refers to the instant it is transferred to the intermediate register.

Only one EOP and one IR can be configured for each counter or meter.

Counter and metering values are distributed to all the power system control centres during the same process cycle. Thus for one and the same counter or metering channel periods cannot be individually set for the various power system control centres receiving the respective values.

2.4.1.1 Period

The period for transferring counter and metering data to the intermediate register can be set in a range from 30 seconds to 24 hours. The reference time for the period is 00.00 hours on the current day.

2.4.2 On request

In addition to the periodic data transfer counter or metering values can be sent on request from the station level at any time. In this transfer mode the group information (see Table 3) is evaluated, i.e. values of a specific group or all values can be sent depending on the request command.

2.4.3 Time accuracy

The discrepancy between the instants of transferring the data of two counters or meters is at the most half a pulse-width. Thus at a maximum pulse repetition rate of 25 Hz, the discrepancy is better than 20 ms. This applies equally to transfer within the same bay unit and between bay units.

3 Setting

Table 1: Pulse counter settings

Parameter	Range	Unit	Default	Description
Counting Mode	Up Down	-	Up	Counting direction Up = incrementing Down = decrementing
Edge Mode	Rising Falling Rising and Falling	-	Rising	Edge that leads to an incrementing or decrementing impulse

Table 2: Power meter settings

Parameter	Range	Unit	Default	Description
Energy per Digit	0 .. 50000	0.01 kWh	100	Primary power (kWh) per digit of the transferred metering value
Primary Voltage	0 .. 50000	0.01 kV	11000	Primary reference voltage (normally the rated voltage)
Primary Current	0 .. 50000	A	500	Primary reference current (normally the rated current)
AIM Input Voltage	0 .. 10000	mV	3536	Scaling factor for the metering function considering vt ratio and characteristics of the REC 580 input channel (see 2.2.2)
AIM Input Current	0 .. 10000	mV	4419	Scaling factor for the metering function considering ct ratio and characteristics of the REC 580 input channel (see 2.2.2)

Table 3: Transfer mode settings possible on each pulse counter or energy meter

Parameter	Range	Unit	Default	Description
Group	0 .. 3	-	0	Group assignment for transfer mode “On request”
End of Period Reading	0 - 0.5 - 1 - 1.5 - 2 - 2.5 - 3 - 4 - 4.5 - 5 - 6 - 7.5 - 8 - 9 - 10 - 12 - 15 - 16 - 18 - 20 - 22.5 - 24 - 30 - 32 - 36 - 40 - 45 - 48 **min** - 1 - 1.2 - 1.33 - 1.5 - 1.6 - 2 - 2.4 - 2.66 - 3 - 4 - 4.8 - 6 - 8 **h** - 0.5 - 1 **d**	min h d	1 d	Period at the end of which the corresponding counter or metering value is transferred and the counter is reset.
Intermediate Reading	0 - 0.5 - 1 - 1.5 - 2 - 2.5 - 3 - 4 - 4.5 - 5 - 6 - 7.5 - 8 - 9 - 10 - 12 - 15 - 16 - 18 - 20 - 22.5 - 24 - 30 - 32 - 36 - 40 - 45 - 48 **min** - 1 - 1.2 - 1.33 - 1.5 - 1.6 - 2 - 2.4 - 2.66 - 3 - 4 - 4.8 - 6 - 8 **h** - 0.5 **d**	min h d	0	Period at the end of which the corresponding counter or metering value is transferred without resetting the counter.

1 System overview

This section describes the provision of measurements for display on the local HMI and the station and power system control units.

The acquisition of the process signals, i.e. primary voltage and current and status signals from the switchgear, is performed by the bay units. The bay units pre-process the signals and transfer their metered values together with the associated signals to the station control level via the station bus. The metered values can also be viewed on the local HMI on the bay unit.

Metered variables are measured, evaluated and supervised by each of the bay units independently. The REC 580 comprises a 19” rack (main rack) and where necessary an extension rack. Each of these can accommodate one or two analogue input units 500AIM02 (Figure 1).

An analogue input unit has 16 processing channels which can be assigned either to the input transformer module 500MTM02 (max. 13 AC measurements) or the transducer module 500ITM01 (max. 16 DC signals). The process signals are connected directly to the 500MTM02 respectively 500ITM01 units. Because of the different hardware versions and the ability to configure each with jumper plugs, a large number of combinations of MTM and ITM signals can be accommodated.

The analogue input unit 500AIM02 includes the anti-aliasing filters and samples the analogue signals in the analogue-to-digital converter to obtain their instantaneous values. The software installed in the 500AIM02 computes the values of the measured variables at a cycling time of less than 1 ms.

The measured variables are transferred to the central processing unit 500CPU03 via the internal MVB bus every 128 ms. A maximum of 30 measured variables can be transferred from a 500AIM02 to the CPU. The measured variables can be transferred from the central processing unit 500CPU03 to the station control level.

In contrast to Figure 1, the 500AIM02 can also communicate with the 500CPU03 via the internal VME bus, providing

- an extension rack is not needed
- an input/output unit Type 500BIO01 is not fitted
- no PISA’s are fitted

This, however, has no influence on the processing of the measured variables as far as the user is concerned.

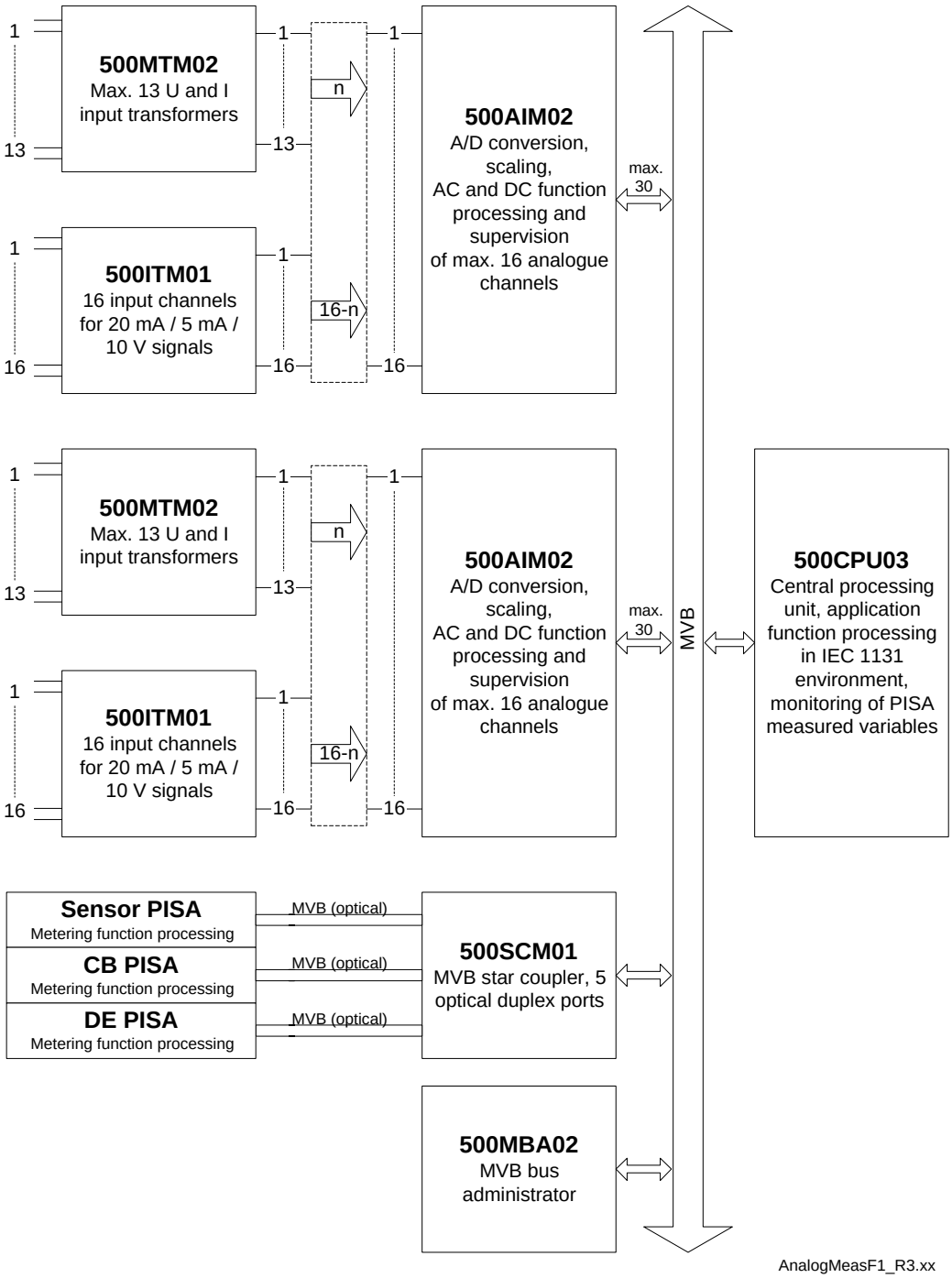

Figure 1: Signal acquisition and processing

As can be seen from Figure 2, the measured variables arriving at the 500AIM02 are scaled first, regardless of whether they come from the 500MTM02 or the 500ITM01. Once they are referred to the rated values, they can be processed by the software modules from the AC function block libraries. The resulting AC and DC measured variables are then

available in the signal list together with the PISA measured variables. From there they can be transferred to the station control level, viewed on the local HMI or processed by the function chart.

The measured variables can also be supervised in relation to specified limits by the “Monitoring” function block. If a measured variable transgresses one of its permissible limits, a time-stamped event can be generated that is available for display or further processing. The “Monitoring” function block is configured for the 500AIM02 where it supervises the unit’s measured variables and also for the 500CPU03 to supervise the PISA and ASW measured variables. For the user, the operation and settings are the same in both cases.

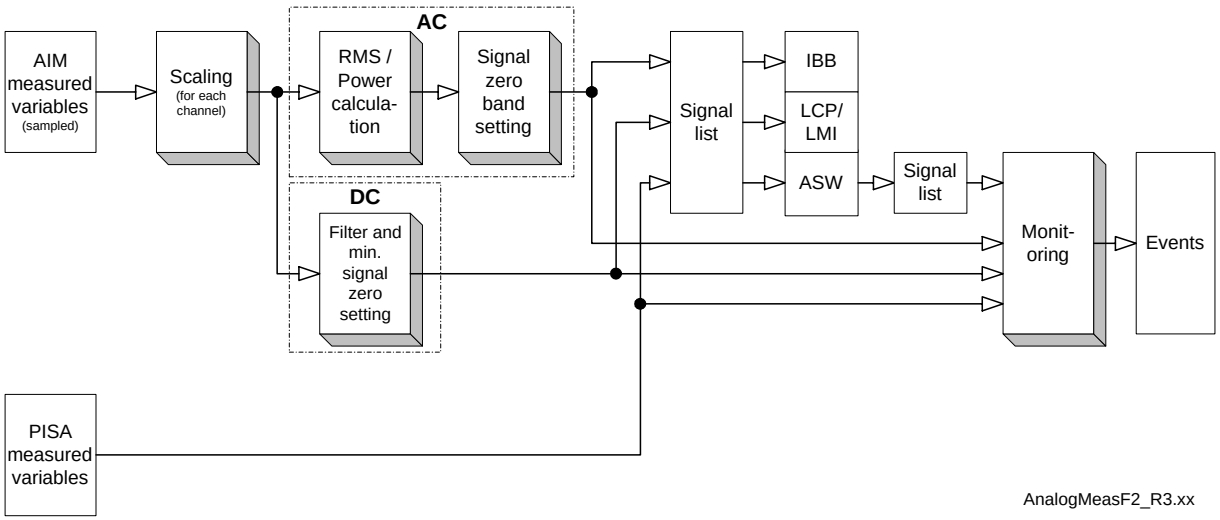

Figure 2: Block diagram for the processing and supervision of measured variables

AIM	500AIM02
ASW	Application software (function plan)
IBB	Interbay bus
LCP	Local control panel (large display)
LMI	Local HMI (small display)

2 Transfer of measured variables

2.1 Cyclic

The measured variables in the bay units are transferred from the analogue signal processing function to the central processing unit every 128 milliseconds. The central processing unit processes the measured variables according to the parameters set for the data point and saves the calculated results.

The measured variables are then transferred via the station bus at a predefined cycling time to the communication gateways and station control HMI units.

2.2 Signal integration

Provision is made in the bay units for integrating each of the measured variables to obtain a stable signal. To this end, changes in the values of the measured variables are added or subtracted as the case may be and the resultant compared with a set threshold value. When the resultant exceeds the threshold value, the corresponding value in the central processing unit is updated.

In the bay units, the central processing unit polls the digitised measured variables every 128 milliseconds and apply them to their integrators. Providing stabilisation has been configured, the changes in the value of the respective measured variable are cyclically added and the resultant compared with the threshold setting.

The integrator threshold is set individually for each of the measured variables. Its value corresponds to the percentage total change normalised to 1s and can have a setting in the range 0% to approx. 320% (Table 1). No integration takes place for a setting of 0% and the measured variable in the bay unit is continuously updated.

Table 1: Integrator settings

Parameter	Range	Unit	Default	Description
Measured hysteresis	0 .. 32767	0.01% nominal value	0	The instantaneous value of the measured variable is transferred when the integral of the changes in its value exceeds this setting.

3 Signal scaling

3.1 Description

3.1.1 General

There is a “Scaling” function block (see Figure 3) for each input channel of a 500AIM02 module which

- adjusts the instantaneous value x_c as determined by the scaling factor s and offset o
- normalises the instantaneous value x_n in per unit of the respective nominal value (current or voltage rating of the item of plant) n

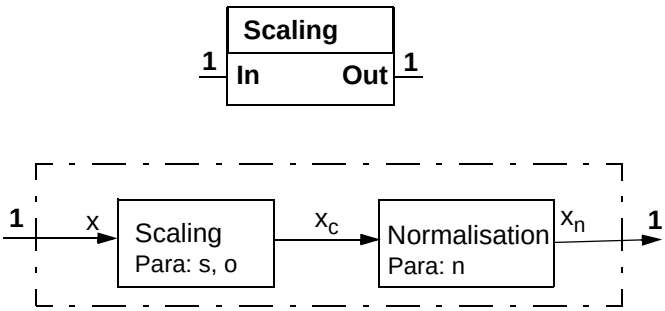

Figure 3: “Scaling” function block

Equation 1 represents the conversion of the sampled instantaneous values x at the output of the A/D converter to the adjusted instantaneous values x_c:

(Equation 1)

	$x_c = s \cdot x + o$
Input	
x	sampled instantaneous values at the output of the A/D converter
Output	
x_c	scaled instantaneous value
Parameters	
s	scaling factor
o	offset

Equation 1: Scaling the instantaneous values x

Equation 2 represents the conversion of the adjusted instantaneous values x_c to the normalised instantaneous values x_n:

(Equation 2)

$x_n = \frac{x_c}{n}$	
Input x_c	scaled instantaneous value
Output x_n	normalised instantaneous value
Parameter n	nominal value

Equation 2: Normalising the instantaneous values x_c

3.1.2 Determination of the scaling factor s and offset o

Normally the following values are used for the scaling factor and offset:

scaling factor s : 1.0000
offset o : 0%

The accuracies given in Section 5.2.1 for the AC measured variables apply when using these values.

Should in a special case, values other than the default values be used for s and o, follow the procedure given in Table 2:

Table 2: Determination of the scaling factor s and offset o

Step	Operation
1	Set s = 1.0000 and o = 0%.
2	Configure a process signal with a value = 0 and the RMS function block to measure RMS_OUT (see Section 5.5.2).
3	Calculate the parameter o $o[\%] = \frac{-OUT_RMS}{Nominal} \cdot 100\%$
4	Set s = 1.0000 and o as calculated in Step 3.
5	Configure a process signal with a value = 0 and the RMS function block to measure RMS_OUT. If now the measured variable has increased in relation to Step 2, use parameter o with the opposite sign. Example: -5% is used instead of +5%
6	Configure a process signal with a value = nominal and the RMS function block to measure RMS_OUT.
7	Calculate the parameter s $s[p.u.] = \frac{Nominal}{OUT_RMS}$
8	Set s as calculated in Step 7 and o as calculated in Step 3.

Figure 4 shows the influence of the parameters s and o on the transfer characteristic between the sampled instantaneous values and the scaled instantaneous values.

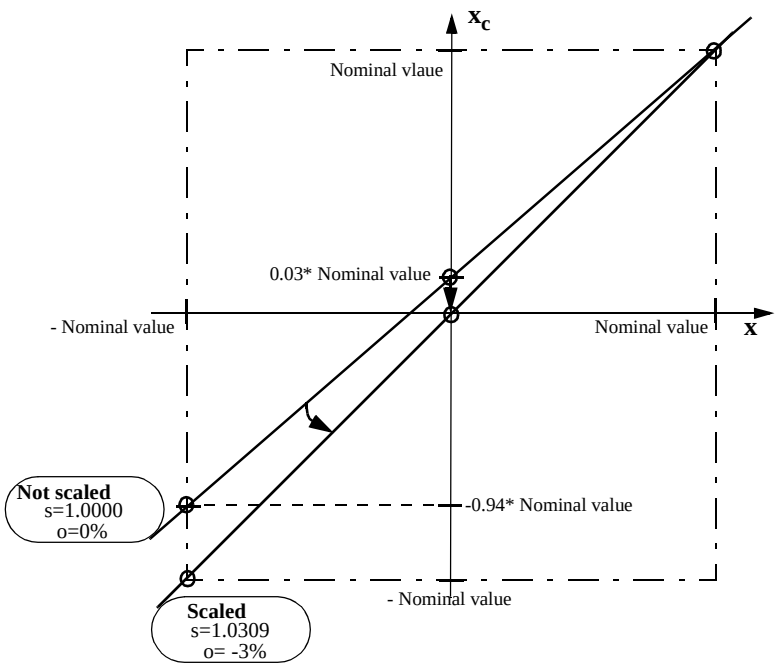

Figure 4: Influence of the scaling factor s and offset o on the transfer characteristic from the sampled values x at the output of the A/D converter to the scaled values x_c

3.1.3 Determination of the nominal value n

The nominal value n is needed to convert the absolute sampled values to per-unit values referred to a nominal value (normally the rated value of the item of primary plant such as current or voltage). Functional blocks such as RMS, RMS_0 etc., that process the instantaneous values of the input channels of the 500AIM02 use the scaled and normalised sampled values at the output of the “Scaling” function block.

The nominal value n for the metered AC values depends on the following:

- the ratings of the primary plant (current and voltage)
- the ratios of the main instrument transformers (current and voltage)
- the ratings of the input transformer unit 500MTM02 (current and voltage)
- the input channels used on the input transformer unit 500MTM02 (voltage, current metering or current protection)

The nominal value n is a fixed value for DC measurements and cannot be configured.

3.1.3.1 Nominal value n for AC voltage measurement

Equation 3 calculates the parameter n for an AC voltage measurement. The measuring range of the 500MTM02 is $2*U_{r\text{-}MTM}$:

(Equation 3)

$$n[Digit] = U_r[V] \cdot \frac{U_{sec}[V]}{U_{prim}[V]} \cdot \frac{1}{U_{r_MTM}[V]} \cdot \frac{32767}{2 \cdot \sqrt{2}}$$

Parameters

U_r	Primary phase-to-ground voltage
U_{prim}	Rated primary phase-to-ground voltage of the main v.t.
U_{sec}	Rated secondary phase-to-ground voltage of the main v.t.
U_{r_MTM}	Rated voltage of the input transformer unit 500MTM02 Ratings: 63.51V / 120V / 220V

Equation 3: Calculating the nominal value n for an AC voltage measurement

Example:

Primary data: $U_r = 110000/\sqrt{3}\ V$

$U_{prim} = 110000/\sqrt{3}\ V$

$U_{sec} = 110/\sqrt{3}\ V = 63.51\ V$

REC580 data: $U_{r_MTM} = 63.51\ V$

$$n = 110000V \cdot \frac{63.51V}{110000V} \cdot \frac{1}{63.51V} \cdot \frac{32767}{2 \cdot \sqrt{2}} = 11585$$

3.1.3.2 Nominal value n for AC current measurement

Equation 4 calculates the parameters n for an AC current measurement via the metering c.t. of the input transformer unit 500MTM02. The measuring range of the 500MTM02 is $1.6*I_{r\text{-}MTM}$:

(Equation 4)

$$n[Digit] = I_r[A] \cdot \frac{I_{sec}[A]}{I_{prim}[A]} \cdot \frac{1}{I_{r_MTM}[A]} \cdot \frac{32767}{1.6 \cdot \sqrt{2}}$$

Parameters

I_r	Rated primary current
I_{prim}	Rated primary current of the main c.t's
I_{sec}	Rated secondary current of the main c.t's
I_{r_MTM}	Rated current of the input transformer unit 500MTM02 Ratings: 1 A / 5 A

Equation 4: Calculation of the parameter n for an AC current measurement via a metering input on the 500MTM02

Example:

Primary data: I_r = 1200A
I_{prim} = 1200A
I_{sec} = 1 A
REC580 data: I_{r_MTM} = 1 A

$$n = 1200A \cdot \frac{1A}{1200A} \cdot \frac{1}{1A} \cdot \frac{32767}{1.6 \cdot \sqrt{2}} = 14481$$

Equation 5 calculates the parameter n for an AC current measurement via a protection input c.t. on the input transformer unit 500MTM02. The measuring range of the 500MTM02 is 70 x $I_{r\text{-}MTM}$:

(Equation 5)

$$n[Digit] = I_r[A] \cdot \frac{I_{sec}[A]}{I_{prim}[A]} \cdot \frac{1}{I_{r_MTM}[A]} \cdot \frac{32767}{70 \cdot \sqrt{2}}$$

Parameters

I_r	Rated primary current
I_{prim}	Rated primary current of the main c.t's
I_{sec}	Rated secondary current of the main c.t's
I_{r_MTM}	Rated current of the input transformer unit 500MTM02 Ratings: 1 A / 5 A

Equation 5: Calculation of the nominal value n for an AC current measurement via a protection c.t. on the input transformer unit 500MTM02

Example:

Primary data: I_r = 1200A
I_{prim} = 1200A

REC580 data: $I_{sec} = 1\ A$, $I_{r_MTM} = 1\ A$

$$n = 1200A \cdot \frac{1A}{1200A} \cdot \frac{1}{1A} \cdot \frac{32767}{70 \cdot \sqrt{2}} = 331$$

3.1.3.3 Nominal value n for DC measurement

The nominal value n for DC measurement has a fixed setting of 32767 and is independent of how the unit is configured. Any entry made for the nominal value of a DC measurement is ineffective.

3.2 Settings

A scaling factor s, an offset o and a nominal value n can be configured for each of the 16 input channels of a 500AIM02 (see Table 3). The “Channel type” parameter is ineffective and should show the default setting DC 10V. The parameter n has no influence on DC measurements.

.

Table 3: “Scaling” function settings (individual for each input channel)

Parameter	Range	Unit	Default	Description
Nominal value n	0 .. 32767	Digital	10800	Reference value for converting absolute values to per unit of nominal value (see Section 3.1.3 3.1.3 "Determination of the nominal value n")
Scaling factor s	0 .. 20000	Amplification 10000 corres. to 1.0000 15000 corres. to 1.5000	10000	Amplification factor for scaling the analogue signal (see Section 3.1.2 "Determination of the scaling factor s and offset o")
Offset o	-32000 .. +32000	0.01% of nominal value	0	Offset for normalising the analogue signal (see Section 3.1.2 "Determination of the scaling factor s and offset o")

4 Supervision (zone configuration)

4.1 Description

A signal’s measuring range can be divided into a maximum of 6 zones, zone 1 being the lowest and zone 6 the highest. The upper limits of zones 1 to 5 are adjustable. The settings of the upper limits determine how the overall range is divided into the 6 zones.

An event is generated whenever the measured variable transgresses the upper or lower limit of a zone, providing it remains outside the zone for an adjustable time (minimum zone stay). It is only possible for the measured variable to leave zone 1 in an upwards direction and zone 6 in a downwards direction. Thus a total of 10 time-stamped events can be generated.

Supervision can be configured for the following AC parameters:

- rms values of U and I
- frequency f
- single and three-phase values of P, Q and S powers

and all the DC signals (low-level signals).

Provision is also made for supervising PISA (process interface for sensors and actuators) measured variables.

The principle of the supervision function can be seen from Figure 5. The widths of the supervision zones can be freely chosen within the measuring range of a measured variable, but the zones must be in ascending order. The minimum width of a zone must also be greater than the set hysteresis.

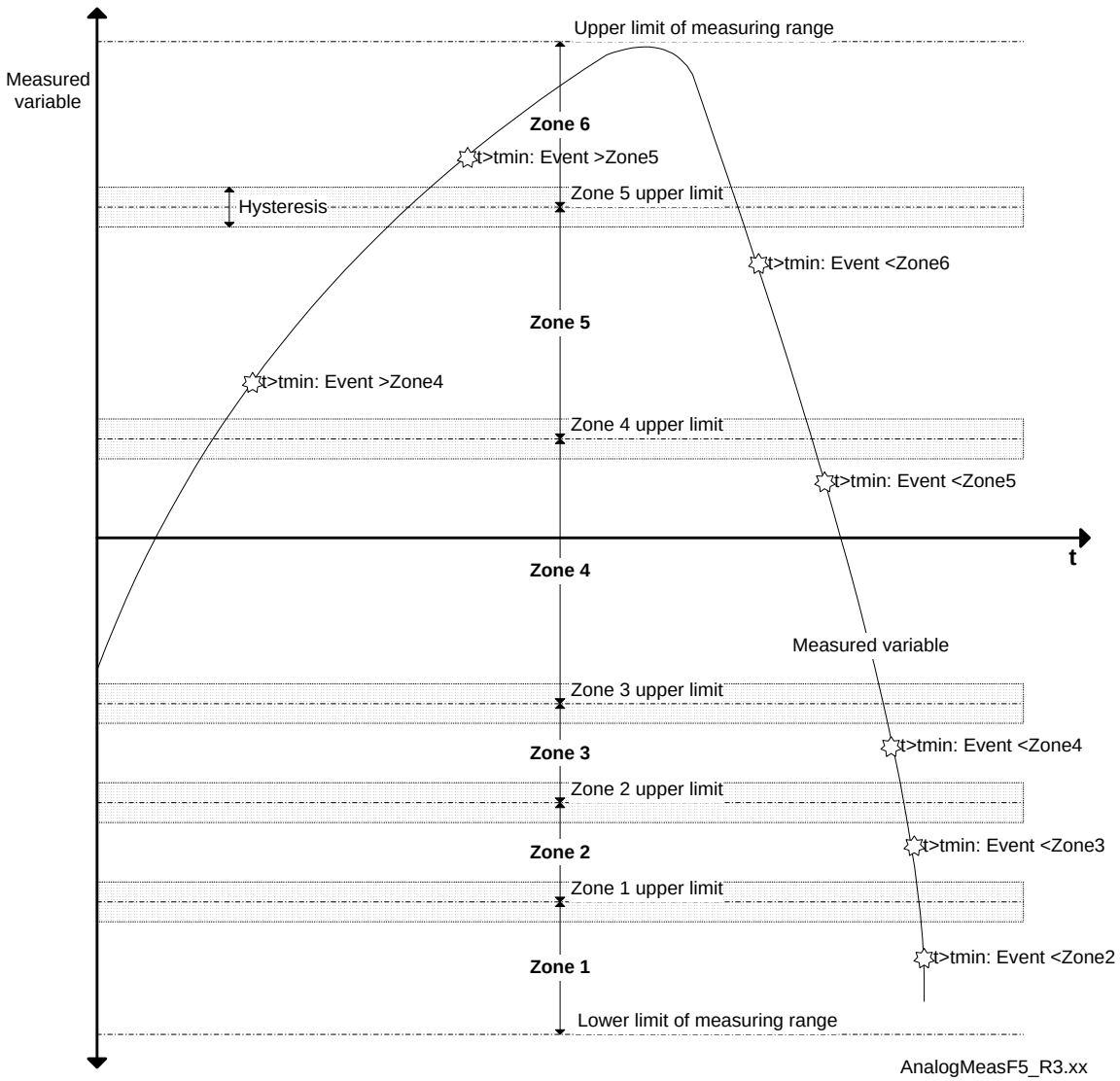

Figure 5: Principle of the supervision function for measured variables

The processing of the events generated by the measured variable supervision function is described in Section “Event recorder”.

4.2 Settings

Table 4 below lists all the configurable parameters for AC and DC measured variables.

Table 4: Supervision settings for each AC and DC measured variable

Parameter	Range	Unit	Default	Description
Hysteresis limit	0 .. 32767	0.01% * nominal value	100	Hysteresis for the limits of the supervised zones
Minimum period in zone (stay)	0 .. 32767	ms	5	Minimum period a measured variable has to be in a zone to generate an event
Alarm mode	Manual Automatic	-	Manual	Acknowledgement of alarms (zones 1..6 alarm) on the local HMI Manual: Alarm maintained until manually acknowledged Automatic: Alarm automatically acknowledged after a set time delay “Time to auto-ackknowledge”
Time to auto-acknowledge	0 .. 65535	s	10	Determines the time delay before an alarm is automatically acknowledged when Alarm mode = Automatic
Zone **n** alarm (**n** = 1 .. 6)	False/True	-	False	True = activates zone **n** alarm on the local HMI
Zone **n** upper limit (**n** = 1 .. 6)	-2147483648 .. 2147483647	0.01% * nominal value	Zone 1: 0 Zone 2: 2500 Zone 3: 7500 Zone 4: 10000 Zone 5: 20000 Zone 6: 32767	Upper limit setting for zone **n** The upper limit of zone 6 is independent of the setting (do not change the default setting)
Alarm Status Text n Customer	20 ASCII characters	-		Event text for EMI and LCP in the customer’s language [1])
Alarm Status Text n Supplier	20 ASCII characters	-		Event text for EMI and LCP in the supplier’s language [1])

[1]) The selection which text is shown on the EMI screen and on the LCP display is done by means of the Builder tool when generating the database download file for REC 580.

5 AC measurements

5.1 Overview

Table 5 gives an overview of the measured variable modules provided on every 500AIM02. Each of these modules is described in detail in the Sections given in Table 5, which also states how many times a module can be

configured and any additional rules and interdependencies that apply between the modules. The input variables can be assigned to any of the 16 input channels that are available.

Table 5: Software modules available for processing AC measured variables

Module name	Input (instantaneous value)	Output	Configurable quantity on a 500AIM02	See Section
RMS	Single-phase voltage or current	RMS value	16	5.5.2
RMS_0	Three-phase voltage or current	RMS value of residual voltage ($3U_0$ or $3I_0$)	2	5.5.3
Active power	Single-phase voltage and current	Single-phase active power	3 (only if AIM_Multi not configured)	5.5.4
Reactive power	Single-phase voltage and current	Single-phase reactive power	3 (only if AIM_Multi not configured)	5.5.5
AIM_Multi	Three-phase voltage and current	Single-phase and three-phase active, reactive and apparent powers, active and reactive import and export of energy, power factor (cos φ)	1	5.5.6
Frequenz	Phase-to-ground or phase-to-phase voltage	Frequency	1	5.5.7

The various measurement processing function blocks are given in Figure 6. The measurement circuit shown applies for all rms current and voltage, frequency and power measurements. Neither “Zero band setting” nor “Monitoring” can be configured for power factor (cos φ) and energy measurements.

After the input signals have been scaled, the rms values and powers are calculated from the instantaneous currents and voltages and the signal level is determined (default setting 1%), below which the output is set to zero (zero band setting). The signal then becomes available in the signal list for processing by the function chart (application software) or for transfer to the station control level.

The output of the “Zero band setting” block is also fed to the “Monitoring” block where it is supervised and can generate events when it transgresses one of 5 configurable limits (see Section 4).

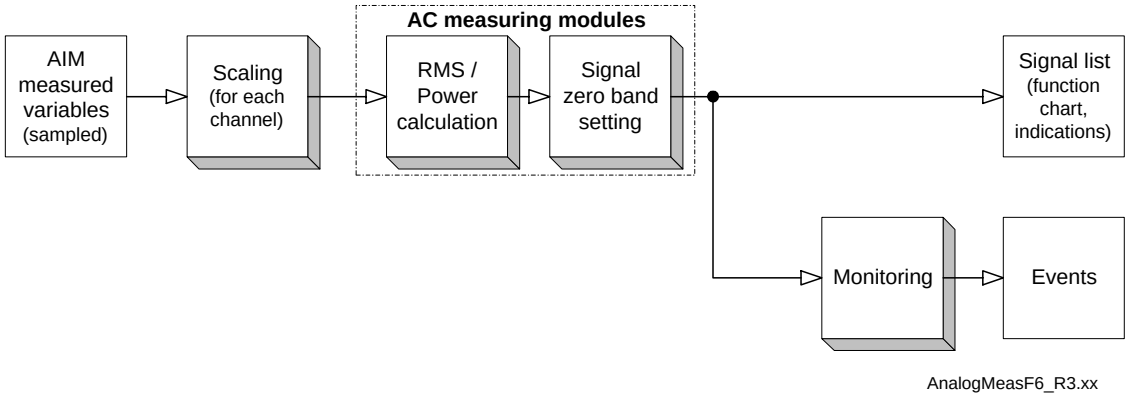

Figure 6: Function blocks for processing AC measured variables

5.2 Accuracy

5.2.1 AC measured variables

Table 6 lists the measuring ranges, resolutions and accuracies applicable for AC measured variables. The table assumes that the c.t and v.t secondary ratings are the same as the input ratings of the input transformer unit 500MTM02.

Table 6: Characteristic data of the signal acquisition modules for AC measured variables

Variable	Nominal value	Measuring range			Resolution	Accuracy				
		min	max	Overflow		Class	Standard	Reference range		
U_{Ph-0}, U_0, U_{ref}	U_r	0	2 U_r	>2 U_r	0.0001 U_r	0.5	IEC688	0.8 .. 1.2 U_r	49..51Hz / 59..61Hz[1)]	
I_{Ph}, I_0	I_r	0	1.6 I_r	>1.6 I_r	0.0001 I_r	0.5	IEC688	0 .. 1.2 I_r	49..51Hz / 59..61Hz[1)]	
f_U, f_{ref}	f_r , U_r	0	2 f_r	>2 f_r	0.0001 f_r	0.1 0.2	IEC688	0.98 .. 1.02 U_r	49..51Hz / 59..61Hz 48..52Hz / 58..62Hz	
P three-phase	$P_r = 3*U_r*I_r$	-3.2 P_r	+3.2 P_r	>+3.2 P_r <-3.2 P_r	0.0001 P_r	1	IEC688	0.98 .. 1.02 U_r 0 .. 1.2 I_r	49..51Hz / 59..61Hz	cos(φ)= 0.8 ind..1 ..0.8 cap.
Q three-phase	$Q_r = 3*U_r*I_r$	-3.2 Q_r	+3.2 Q_r	>+3.2 Q_r <-3.2 Q_r	0.0001 Q_r	1	IEC688	0.98 .. 1.02 U_r 0 .. 1.2 I_r	49..51Hz / 59..61Hz[2)]	sin(φ)= 0.8 ind..1 ..0.8 cap.

Table 6: Characteristic data of the signal acquisition modules for AC measured variables

S three-phase	$S_r = 3*U_r*I_r$	-3.2 S_r	+3.2 S_r	>+3.2 S_r <-3.2 S_r	0.0001 S_r	
Power factor		-1	+1	none	0.0001	

[1)] According to IEC688, the permissible error at 45..55 Hz (54..66 Hz) is double that expressed by the accuracy class (e.g. the maximum error of Class 0.5 at a frequency between 45 Hz and 55 Hz is 1%).

[2)] According to IEC688, no variation from the stated frequency range is permissible for frequency-sensitive transducers.

5.2.2 Energy measurement

Table 7 lists the measuring ranges, resolutions and accuracies applicable for energy calculations. The table assumes that the c.t and v.t secondary ratings are the same as the input ratings of the input transformer unit 500MTM02.

Table 7: Characteristic data of the modules for energy metering

Variable	Nominal value	Measuring range		Resolution	Accuracy				
		min	max		Class	Standard	Reference range		
E_p+, E_p-	U_r , I_r	0	$(2^{31}-1)\cdot$ impulse value	1 impulse	2	IEC1036	0.98..1.02 U_r 0.05..1.2 I_r	49.75..50.25Hz / 59.75..60.25Hz	cos(φ)= 0.5 ind .. 1..0.5 cap
E_q+, E_q-	U_r , I_r	0	$(2^{31}-1)\cdot$ impulse value	1 impulse	2	IEC1268	0.98..1.02 U_r 0.05..1.2 I_r	49.75..50.25Hz / 59.75..60.25Hz	sin(φ)= 0.5ind.. 1..0.5 cap

5.3 Common settings

The system frequency is set for all the measuring modules together (Table 8).

Table 8: Common settings for all the measuring modules

Parameter	Range	Unit	Default	Description
System frequency f_r	50 / 60	Hz	50	System frequency setting

5.4 Assigning attributes to measured variables

Quality attributes are assigned to measured variables as shown in Table 9.

Table 9: Assignment of attributes to measured variables

HW	Bay unit				Station level			Remarks
	Measured variable			Supervision	Measured variable			
IV	IV	OV	Value		IV	OV	Value	
0	0	0	mmmm	active	0	0	mmmm	Normal acquisition of measured variables
1	1	0	xxxx	inactive	1	0	xxxx	HW failure (v.t. m.c.b. tripped, A/D converter failure, module failure)
0	0	1	xxxx	inactive	0	1	xxxx	Process signal overflow

IV ... invalid / OV ... overflow / mmmm ... measured variable / xxxx ... undefined value

5.5 Software modules

5.5.1 Zero band setting

This function is included in the measurement modules and affects all measured variables excepting power factor and energy (kWh).

Values of measured variables between the positive and negative zero band settings are considered to be zero. The zero level can be set as given in Table 10 for all the measured variables. The zero setting for P, Q and S has no influence on the calculation of energy values.

The principle of the zero band setting function can be seen from Figure 7.

The values of measured variables in the band

$$-\text{Zero band setting} < x_m < +\text{Zero band setting}$$

are set to zero. The zero band setting function is inactive when set to zero.

The zero band for the PISA (process interface for sensors and actuators) measured variables that are already digitised cannot be set on the REC580.

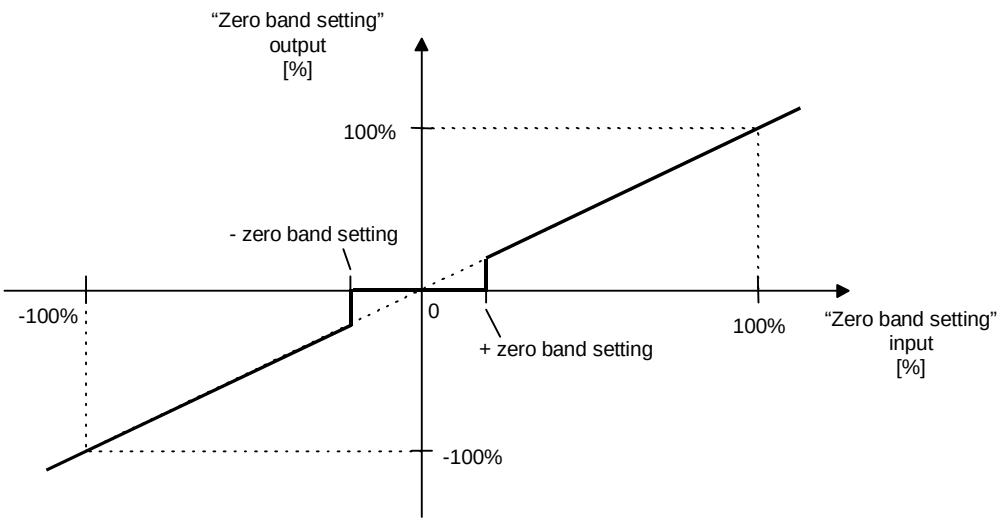

Figure 7: Principle of the zero band setting function

5.5.1.1 Settings

Table 10 shows the possible zero settings for AC measured variables.

Table 10: Zero band setting available for each measured variable

Parameter	Range	Unit	Default	Description
Zero band setting	0 .. 5000	0.01% nominal value	10	Defines the range of a measured variable within which its value is considered to be zero

5.5.2 RMS value

5.5.2.1 Description

This function block calculates the rms values of currents and voltages from their instantaneous values.

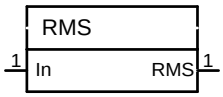

Figure 8: The RMS function block

Table 11: RMS function block input

Signal	Type	Description
In	Analogue	Instantaneous value of current or voltage

Table 12: RMS function block output

Signal	Type	Description
RMS	Analogue	True rms value of the input signal in steps of 0.01% of nominal, range -32768 .. 32767, 10000 corresponds to 100% of nominal

5.5.2.2 Settings

Table 13: RMS function settings

Parameter	Range	Unit	Default	Description
IN	Channel01 .. Channel16	-	Channel 01	Selection of input channel on the 500AIM02
Zero band setting				Inidividual setting for each output signal (see Table 10)

5.5.3 Residual RMS voltage or current

5.5.3.1 Description

This function block calculates the rms value of the residual voltage $3U_0$ or current $3I_0$ from the instantaneous values or the three-phase system.

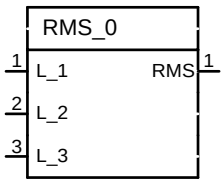

Figure 9: RMS_0 function block

Table 14: RMS_0 function inputs

Signal	Type	Description
L1	Analogue	Instantaneous current or voltage of phase L1
L2	Analogue	Instantaneous current or voltage of phase L2
L3	Analogue	Instantaneous current or voltage of phase L3

Table 15: RMS_0 function output

Signal	Type	Description
RMS	Analogue	True rms of the vectorial sum of the three-phase input signals ($3U_0$ or $3I_0$) in 0.01% of nominal of the input variables, range -32768 .. 32767, 10000 corresponds to 100% nominal

5.5.3.2 Settings

Table 16: RMS_0 function settings

Parameter	Range	Unit	Default	Description
L1	Channel01 .. Channel16	-	Channel 01	Selection of input channel on the 500AIM02
L2	Channel01 .. Channel16	-	Channel 02	Selection of input channel on the 500AIM02
L3	Channel01 .. Channel16	-	Channel 03	Selection of input channel on the 500AIM02
Zero band setting				Output signal setting (see Table 10)

5.5.4 Active power

5.5.4.1 Description

This function block calculates the active power from the instantaneous values of current and voltage. It can only be configured if the AIM_Multi function block is not configured.

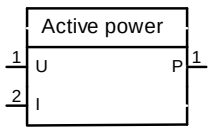

Figure 10: “Active power” function block

Table 17: “Active power” function setting

Signal	Type	Description
U	Analogue	Instantaneous voltage

Table 17: “Active power” function setting

Signal	Type	Description
I	Analogue	Instantaneous current

Table 18: “Active power” function output

Signal	Type	Description
P	Analogue	Active power in 0.01% steps of the rated power U_r*I_r, range -32768 .. 32767, 10000 corresponds to 100% nominal

5.5.4.2 Settings

Table 19: “Active power” function settings

Parameter	Range	Unit	Default	Description
U	Channel01 .. Channel16	-	Channel 05	Selection of input channel on the 500AIM02
I	Channel01 .. Channel16	-	Channel 01	Selection of input channel on the 500AIM02
Zero band setting				Inidividual setting for each output signal (see Table 10)

5.5.5 Reactive power

5.5.5.1 Description

This function block calculates the reactive power from the instantaneous values of current and voltage. It can only be configured if the AIM_Multi function block is not configured.

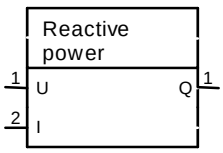

Figure 11: “Reactive power” function block

Table 20: “Reactive power” function inputs

Signal	Type	Description
U	Analogue	Instantaneous voltage
I	Analogue	Instantaneous current

Table 21: “Reactive power” function output

Signal	Type	Description
Q	Analogue	Reactive power in 0.01% steps of the rated power U_r*I_r, range -32768 .. 32767, 10000 corresponds to 100% nominal

5.5.5.2 Settings

Table 22: “Reactive power” function settings

Parameter	Range	Unit	Default	Description
U	Channel01 .. Channel16	-	Channel 05	Selection of input channel on the 500AIM02
I	Channel01 .. Channel16	-	Channel 01	Selection of input channel on the 500AIM02
Zero band setting				Inidividual setting for each output signal (see Table 10)

5.5.6 Multifunctional measurement

5.5.6.1 Description

This function block calculates the following values from the instantaneous values of the three-phase voltages and currents:

- active power per phase (P1, P2, P3)
- three-phase active power (Sum_P)
- reactive power per phase (Q1, Q2, Q3)
- three-phase reactive power (Sum_Q)
- apparent power per phase (S1, S2, S3)
- three-phase apparent power (Sum_S)
- active power export and import (Ep+, Ep-)
- reactive power export and import (Eq+, Eq-)
- power factor

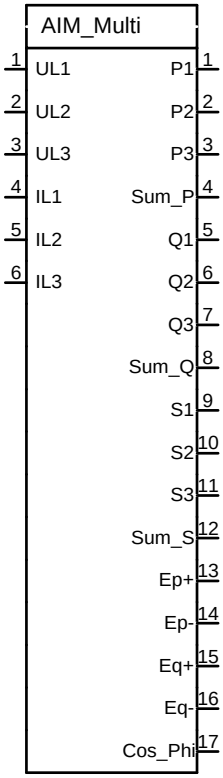

Figure 12: AIM_Multi function block

Table 23: AIM_Multi function inputs

Signal	Type	Description
UL1	Analogue	Instantaneous voltage of phase L1
UL2	Analogue	Instantaneous voltage of phase L2
UL3	Analogue	Instantaneous voltage of phase L3
IL1	Analogue	Instantaneous current of phase L1
IL2	Analogue	Instantaneous current of phase L2
IL3	Analogue	Instantaneous current of phase L3

Table 24: AIM_Multi function outputs

Signal	Type	Description
P1	Analogue	Active power phase L1 in steps of 0.01% of the rated power $UL1_r$*$IL1_r$, range -32768 .. 32767, 10000 corresponds to 100% nominal
P2	Analogue	Active power phase L2 in steps of 0.01% of the rated power $UL2_r$*$IL2_r$, range -32768 .. 32767, 10000 corresponds to 100% nominal
P3	Analogue	Active power phase L3 in steps of 0.01% of the rated power $UL3_r$*$IL3_r$, range -32768 .. 32767, 10000 corresponds to 100% nominal
Sum_P	Analogue	Three-phase active power in steps of 0.01% of the rated power $3UL_r$*IL_r, range -32768 .. 32767, 10000 corresponds to 100% nominal
Q1	Analogue	Reactive power phase L1 in steps of 0.01% of the rated power $UL1_r$*$IL1_r$, range -32768 .. 32767, 10000 corresponds to 100% nominal
Q2	Analogue	Reactive power phase L2 in steps of 0.01% of the rated power $UL2_r$*$IL2_r$, range -32768 .. 32767, 10000 corresponds to 100% nominal
Q3	Analogue	Reactive power phase L3 in steps of 0.01% of the rated power $UL3_r$*$IL3_r$, range -32768 .. 32767, 10000 corresponds to 100% nominal
Sum_Q	Analogue	Three-phase reactive power in steps of 0.01% of the rated power $3UL_r$*IL_r, range -32768 .. 32767, 10000 corresponds to 100% nominal
S1	Analogue	Apparent power phase L1 in steps of 0.01% of the rated power $UL1_r$*$IL1_r$, range -32768 .. 32767, 10000 corresponds to 100% nominal
S2	Analogue	Apparent power phase L2 in steps of 0.01% of the rated power $UL2_r$*$IL2_r$, range -32768 .. 32767, 10000 corresponds to 100% nominal
S3	Analogue	Apparent power phase L3 in steps of 0.01% of the rated power $UL3_r$*$IL3_r$, range -32768 .. 32767, 10000 corresponds to 100% nominal
Sum_S	Analogue	Three-phase apparent power in steps of 0.01% of the rated power $3UL_r$*IL_r, range -32768 .. 32767, 10000 corresponds to 100% nominal
Ep+	Analogue	Three-phase active power export [1)]
Ep-	Analogue	Three-phase active power import [1)]
Eq+	Analogue	Three-phase reactive power export [1)]
Eq-	Analogue	Three-phase reactive power import [1)]
Cos_Phi	Analogue	Power factor, cos_Phi = Sum_P/Sum_S, range -10000 .. 10000, 10000 corresponds to cos_Phi = 1.0000

[1)] Refer to Section “Pulse counters and meters” for the scaling and processing of the metered power signals.

5.5.6.2 Settings

Table 25: AIM_Multi function settings

Parameter	Range	Unit	Default	Description
UL1	Channel01 .. Channel16	-	Channel 01	Selection of input channel on the 500AIM02
UL2	Channel01 .. Channel16	-	Channel 02	Selection of input channel on the 500AIM02

Table 25: AIM_Multi function settings

UL3	Channel01 .. Channel16	-	Channel 03	Selection of input channel on the 500AIM02
IL1	Channel01 .. Channel16	-	Channel 04	Selection of input channel on the 500AIM02
IL2	Channel01 .. Channel16	-	Channel 05	Selection of input channel on the 500AIM02
IL3	Channel01 .. Channel16	-	Channel 06	Selection of input channel on the 500AIM02
Zero band setting				Individual settings for each output signal, excepting for power factor, Ep+, Ep-, Eq+ and Eq- (see Table 10)

5.5.7 Frequency

5.5.7.1 Description

This function block calculates the power system frequency from the instantaneous voltage measurements.

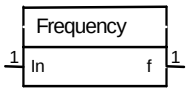

Figure 13: “Frequency” function block

Table 26: “Frequency” function input

Signal	Type	Description
In	Analogue	Instantaneous voltage measurements

Table 27: “Frequency” function output

Signal	Type	Description
f	Analogue	Frequency of the fundamental of the input signal in steps of 0.01% of rated frequency, 10000 corresponds to 100% of rated frequency

5.5.7.2 Settings

Table 28: “Frequency” function settings

Parameter	Range	Unit	Default	Description
IN	Channel01 .. Channel16	-	Channel 01	Selection of input channel on the 500AIM02
Zero band setting				Inidividual setting for each output signal (see Table 10)
Signal zero setting				Inidividual setting for each output signal (see Table 10)

6 DC measurement

6.1 Overview

Process data can also be acquired via 20 mA, 5 mA or 10 V low-level signal inputs. AC modules can be used to determine the measured variables in relation to these process signals. The processing of the measured variables for low-level signals can be seen from Figure 14.

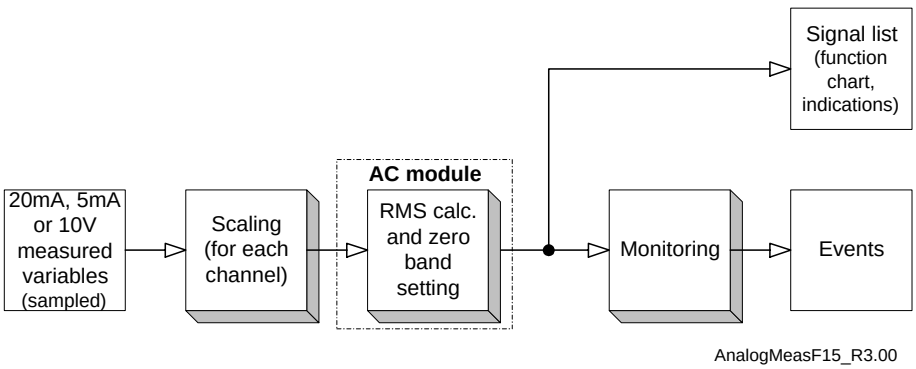

Figure 14: Processing measured variables from DC input signals

The detection of low-level signals can be performed either with or without supervision of the live zero signal level. The supervision function is configurable and identical to that for AC measured variables (see Section 4).

6.2 Accuracy

Table 29 shows the measuring range, resolution and accuracy applicable for DC signals.

Table 29: Characteristic data of the signal acquisition modules for 20 mA low-level signals

Variable	Nominal value	Measuring range			Resolution	Accuracy	
		min	max	Overflow		Error	Reference range
Low-level signal	i_r = 20 mA i_r = 5 mA u_r = 10 V	- i_r - i_r - u_r	+ i_r + i_r + u_r	>+ i_r, <- i_r >+ i_r, <- i_r >+ u_r, <- u_r	0.0001 i_r 0.0001 i_r 0.0001 u_r	$\leq$ 0.5% i_r $\leq$ 0.5% i_r $\leq$ 0.5% u_r	-i_r .. +i_r -i_r .. +i_r -u_r .. +u_r

6.3 Modules

None

7 Testing

7.1 AC measured variables

A stabilised AC supply unit with variable current and voltage and high-precision current, voltage, power and frequency meters are needed to test the AC measuring functions. The operating range of the supply unit must correspond to the rated AC current and voltage of the terminals to which it is connected.

Connect the generators and instruments to the input terminals of the unit under test. Check that the values displayed on the HMI are within the permissible variation of those of the respective input signals.

7.2 DC measured variables

A stabilised DC supply unit with variable current and voltage and high-precision milliammeters and voltmeters are needed to test the DC measuring functions. The DC supply unit and the voltmeter must have a range of at least -12 to +12 V and the milliammeter -25 to +25 mA.

Connect the DC supply unit and the meters to the corresponding DC current and voltage input terminals of the unit under test. Check that the values displayed on the HMI are within the permissible variation of those of the respective input signals.

1 Application

This section describes the signal processing of binary status signals (indications) in the bay unit as well as the setting possibilities of each type of binary I/O unit. Both processing of status signals and event telegrams are described.

Figure 1 shows the communication structure at the station control level to illustrate the interaction between the various signal processing functions.

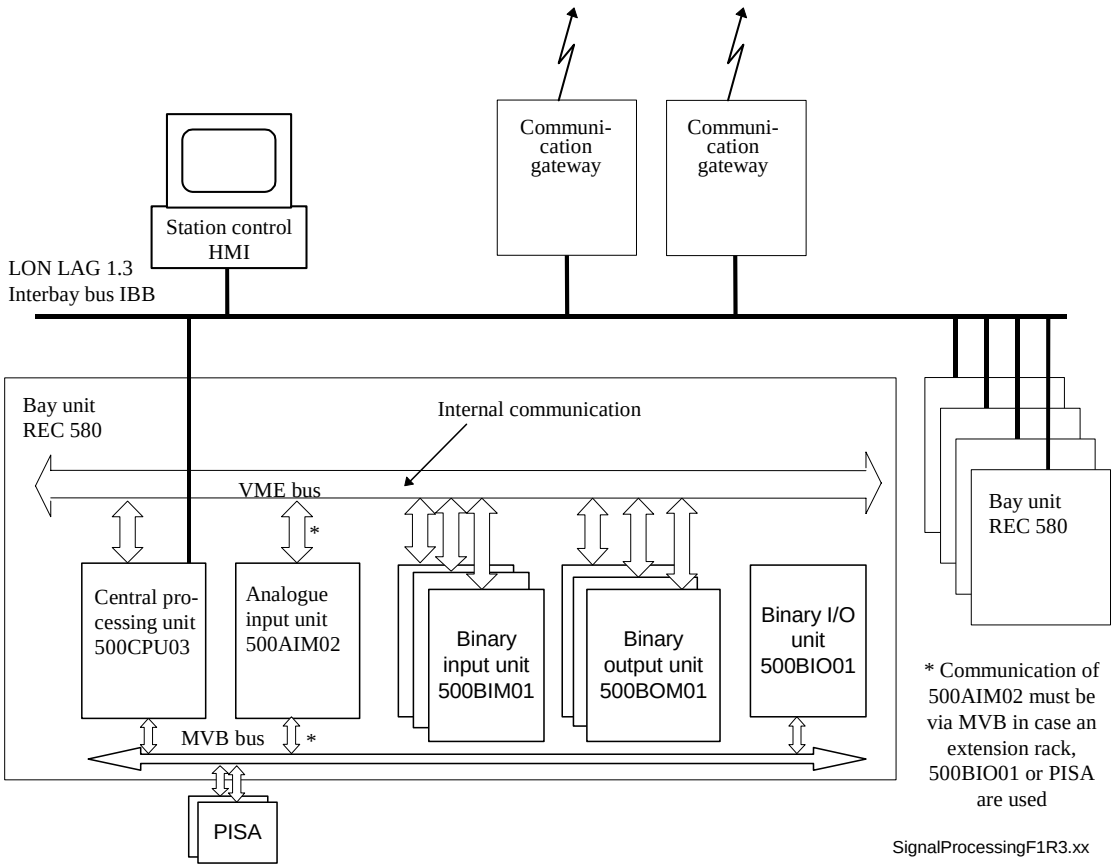

Figure 1: Communication structure of the bay unit within a substation automation system

The central processing units in the bay units communicate with their input and output modules via an internal backplane bus (VME or MVB).

The bay units communicate via the interbay bus (IBB) with the

- communication gateways
- station control HMI units
- each other

Whether communicating via the interbay bus or the backplane bus, a distinction has to be made between two types of data:

- signals that give the current status of the process

- event telegrams that are generated by changes in status

Status signals are processed by the function plan, exchanged for purposes of interlocking between the bay units and used to determine the instant for transferring measurements.

Event telegrams are used to record changes of status for evaluation at station or power system control levels, to generate general signals and alarms and to calculate relative times for signals.

1.1 Communication via the interbay bus

The purpose is to give a general overview of how the supplementary information concerning signal statuses (e.g. status and the cause of transmission) are processed at station control level.

Information is transferred via the interbay bus in the form of data telegrams conforming to the definition in IEC 870-5-101. Apart from the actual signal status, a data telegram includes information on the quality of the signal and the cause of transmission. The most important supplementary information is:

- status of the signal itself (valid/invalid)

1.1.1 Generation of status information

At the station control level, the following status signals conforming to IEC 870-5-101 are supported:

- invalid (IV)
- time invalid (TV)

The following are not supported:

- blocked (BL)
- substituted (SB)
- overflow (OV)
- not topical (NT)
- test bit (T)

Invalid (IV)

The “Invalid” attribute is set when a bay unit detects a hardware failure in the process signal circuit or the bay unit itself has failed, i.e. for the signals:

- module defective (500BIM01, 500BIO01)
- spurious oscillation of the input signal was detected (oscillation suppression)

- failure of bay unit or communication with the bay unit (supported by units on station level)

Measurements:

- module defective (500AIM02)

Process data with an invalid attribute are assigned the last valid value. It is not permissible to use the value, because it does not necessarily correspond to the actual value.

Position indicator signals with an “Invalid” attribute act in a blocking sense on interlocking logics, i.e. the interlock check is negative.

Time invalid (TV)

The quality attribute TV does not concern the actual process information, but is merely a time stamp attached to an event. This means that it can be set for every event telegram regardless of the statuses of the other quality attributes.

The condition for setting the “Time invalid” (TV) attribute is fulfilled when the corresponding bay unit is not synchronised and the deviation of the internal clock exceeds the permissible limit.

This status information does not influence the processing of the process data and the signal status continues to be valid.

1.1.2 Cause of transmission

According to IEC 870-5-101, the cause of transmission (COT) comprises the following:

- Test bit (T): indicates that a signal was generated in the test mode.
- P/N bit: positive or negative confirmation in the response to a command.
- Cause: The event that initiated transmission.

Apart from P/N, the station control level distinguishes a number of causes of transmission. Table 1 is based on IEC 870-5-101 and lists all the causes of transmission supported by a bay unit.

It should be noted that any COT number between 1 and 127 can be attached to the signal, e.g. by means of an ASW function, and transferred to the station level.

Table 1: Cause of transmission supported by REC 580

COT No.	Designation according to IEC 870-5-101	Significance
<3>	spontaneous	Process data are transferred when a change takes place
<6>	activation	Transmission was activated by a command
<7>	activation confirmation	Confirmation of the activating command

Table 1: Cause of transmission supported by REC 580

<8>	deactivation	Deactivating command
<9>	deactivation confirmation	Confirmation of the deactivating command
<20>	interrogated by general interrogation	General data transfer request

1.1.3 Originator address

The originator address is mirrored, i.e. the same originator address which is sent from station level is used for the reply.

1.2 Overview of processing functions

The following Sections describe the main signal processing structure in the binary input unit and the central processing unit.

1.2.1 Processing by the binary input unit

Signal processing by the binary input unit consists of the signal acquisition functions

- time stamping signal changes
- input voltage level detection at defined thresholds
- contact bounce filtering
- signal inversion
- suppressing spuriously oscillating signals

and the signal processing and transfer functions

- processing double-point indications
- generating event telegrams
- management of quality attributes

1.2.2 Processing by the central processing unit

Signal processing by the central processing unit consists of

- processing signal statuses
- signal acquisition and transfer
- processing and transferring counter and metering values
- running the function chart
- etc.

Running the function chart entails

- further processing of double point indications
- handling signals with relative time

- suppression of dependent signals
- supervision of the signal voltage
- supervision of the control voltage
- processing commands
- etc.

2 Design

2.1 Signal acquisition by the binary input unit

The binary input unit 500BIM01 and the binary I/O unit 500BIO01 perform the acquisition of binary process signals in the bay units. The function blocks in the processing chain are shown in Figure 2 by the example of 500BIM01.

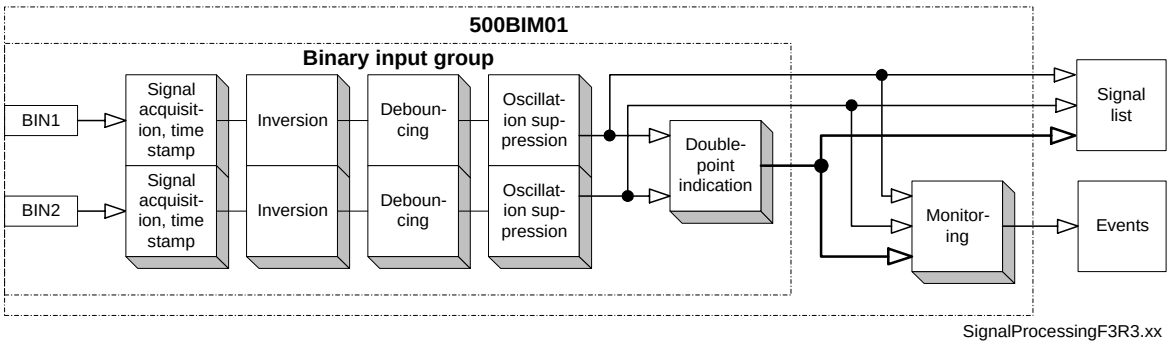

Figure 2: Binary signal processing chain for one binary input group of 500BIM01. The output of the block “Double point indication” is a signal with four possible statuses.

The application program and functions generate derived binary process signals as a consequence of process statuses (e.g. warnings when intervals are exceeded etc.).

The signal acquisition function performs the tasks up to the point that a signal is finally recognised as binary status data.

The tasks in the case of actual binary process signals are:

- acquisition of signals with a resolution of 1 ms
- detection of the first edge of a status change and attaching a time stamp
- inversion of the voltage level definition in special cases
- filtering of contact bounce phenomena (decaying oscillations)
- suppression of events generation during spurious signal oscillations

Once these tasks have been completed and the signal recognised as binary process data, it is ready for processing.

Derived binary process signals already count as statuses and can be processed directly.

2.1.1 Signal acquisition and resolution

Actual process signals are detected with a resolution of 1 ms. The absolute time it occurs is attached to every change in signal status.

The accuracy of the signal times in relation to each other in a bay unit is ± 1 ms.

The time a signal occurs is the instant of its first valid positive (0 to 1) or negative-going (1 to 0) edge. A change in signal status is a change in voltage from one defined logical signal state to the other defined logical signal state.

The threshold values for logical “1” and logical “0” for each actual binary process signal (i.e. the setting and resetting levels) are shown in Table 4).

2.1.2 Inversion

Provision has to be made for inverting every actual process signal. This involves configuring an input such that it generates a logical “1” at its output either when a logical “1” or when a logical “0” is applied to its input.

Where configured, signal inversion takes place in the binary input circuits of the units 500BIM01 and 500BIO01. All processing afterwards in the binary input unit and in the central processing unit (e.g. application program or general functions) is performed using the inverted value.

This means, for example, that for process signals which are configured as double signals, the status of the double signal is determined on the basis of the inverted signal value.

The table below shows the different statuses that are possible for inverting signals. Input in this case refers to the actual binary process signal and output the signal used for further processing.

Inverted	Input	Output
No	0	0
No	1	1
Yes	0	1
Yes	1	0

Table 2: Statuses of inverted signals

Inversion can be configured for each of the binary inputs individually.

2.1.3 Contact bounce filter

The switching edges of process signals generated by contacts can be distorted by contact bounce. Provision therefore has to be made for filtering process signals to obtain a clean switching edge.

The filter detects the first edge of a signal and then commences to supervise it for a configurable time. The signal is valid providing it is still being detected or detected again at the end of the set filter time.

Each input of the input units 500BIM01 and 500BIO01 is equipped with a contact bounce filter that operates according to the following principle:

A counter is started when the first signal edge is detected which counts the clock impulses corresponding to the set filter time. When the counter reaches the set number of clock impulses, the function checks whether the signal change is still present and if it is, it is made available for further processing.

The time stamp attached to actual process signals is uninfluenced by the contact bounce filter. The time stamp applies to the first valid signal edge that is detected. A process signal is thus defined by:

- the first valid edge of a signal voltage change regardless of the duration of the contact bounce filter
- the attainment of a stable state within a configurable interval

A process signal is only available for further processing after the contact bounce filter time has expired. Figure 3 illustrates the operating principle of the contact bounce filter.

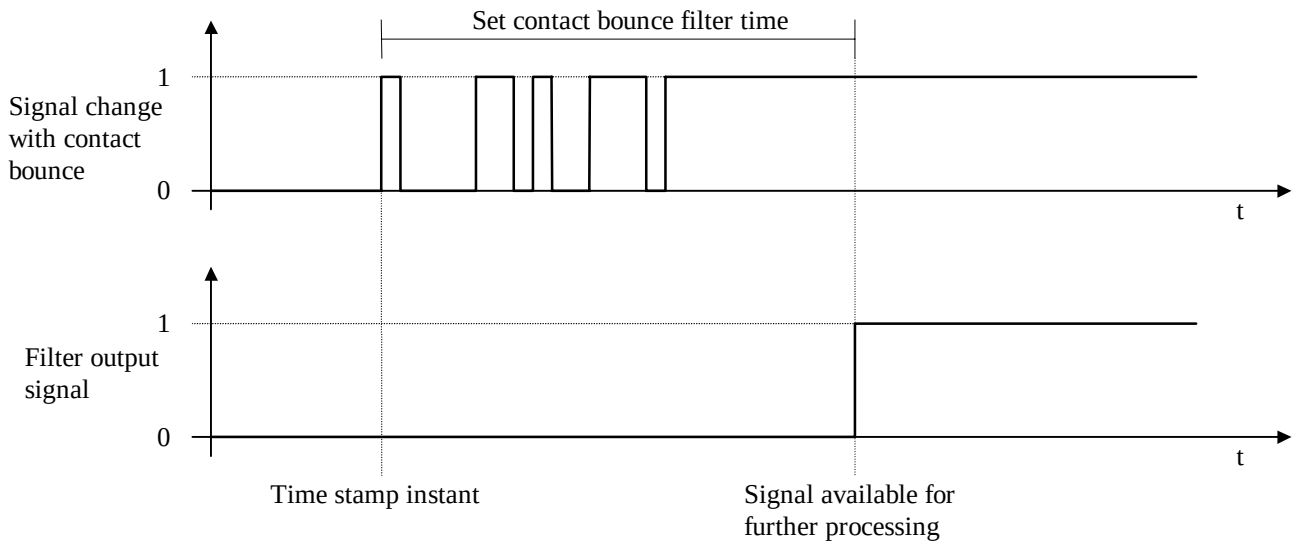

Figure 3: Operation of the contact bounce filter for a binary process signal

When configuring the system, the contact bounce filter for each binary input has to be set in the range 0 .. 100 ms. A setting of 0 means that the filter is deactivated.

2.1.4 Suppression of spurious oscillation

Spuriously oscillating signals are repeated several times within a short period of time (e.g. 12 changes of status within a second).

The first occurrence of such signals has to be processed, but the repeats should not and therefore have to be suppressed. This is achieved by setting the quality attribute “Invalid” (IV) for the duration of the oscillation suppression setting.

The oscillation suppression interval can be set individually for each process signal.

The oscillation suppression function can be configured on the units 500BIM01 and 500BIO01 independently for each of the binary inputs using the following procedure:

1. Every change of signal increments the signal’s counter (signal change counter) which has a range from 0 to 255. The incrementation and decrementation procedure is illustrated in Figure 4 and 5.
2. The counter is decremented by a signal with a period of max. 2048 ms (decrement rate, configurable to lower values). It follows from this and the procedure which has been described that only oscillation of a signal at a frequency higher than 0.5 Hz will activate the oscillation suppression function. At lower frequencies, the continuous decrementation of the counter prevents it from reaching its set upper limit.
3. If the counter reaches its upper limit (maximum count), the signal is deemed to be oscillating and the attribute “Invalid” (IV) is set to logical “1”.
4. When the counter reaches its lower limit (minimum count) again, the attribute “Invalid” (IV) is reset to logical “0”.
5. Once a signal is deemed to be oscillating, its status is fixed at the last valid value and only this value is then available for processing by the central processing unit in the bay unit. The generation of events with a time stamp is also suppressed.
6. If the signal oscillates for a given maximum time (maximum suppression time), the signal’s “Invalid” attribute (IV) is reset and the counter is reinitiated at 0 (Figure 4). The resetting of the counter at the limit time can itself be suppressed by setting the corresponding parameter to 0 which sets the maximum suppression time to infinity.

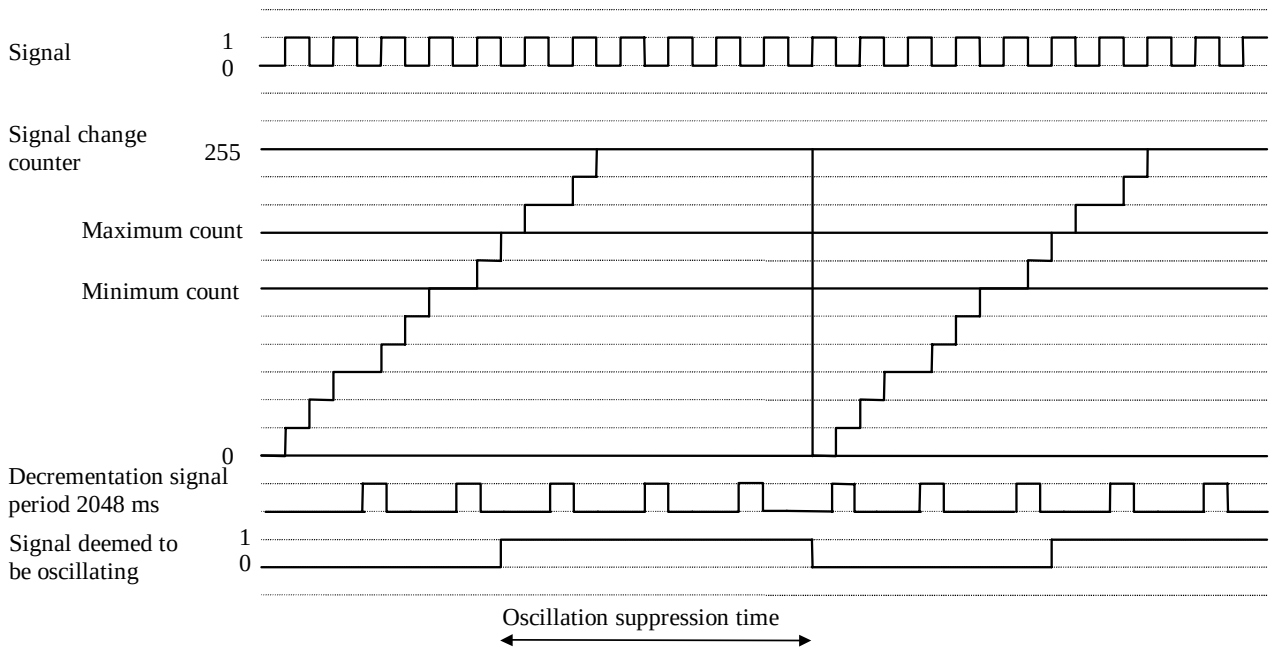

Figure 4: Example of a continuously oscillating signal for which a suppression time > 0 has been set

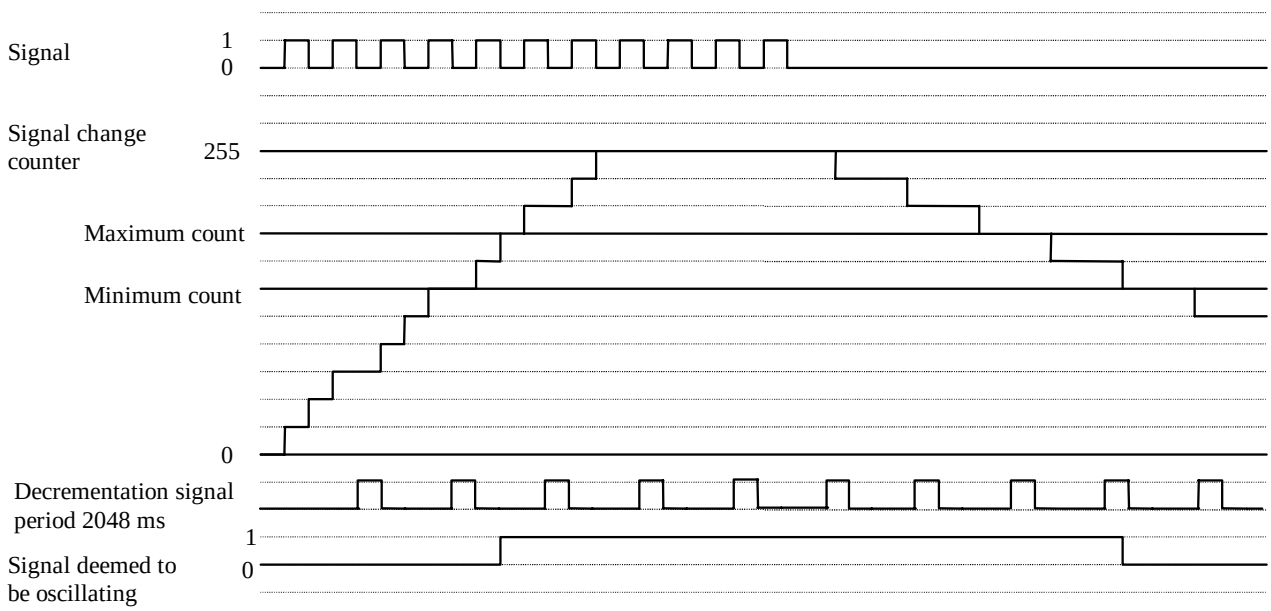

Figure 5: Example of a briefly oscillating signal

2.1.5 Processing double point indications

To properly acquire switchgear position indicator signals, two process signals have to be combined to form a double point indication. A double point indication can have four statuses:

- 00 = intermediate position or defective
- 01 = open
- 10 = closed
- 11 = defective

All four statuses have to be reliably transferred to the higher control levels.

According to IEC 870-5-101, four different events can be generated by a double signal: immediately each of the end positions “Open” and “Closed” (01, 10) is reached, in the defective position (11) and after a set delay time in the intermediate position (00).

The binary input unit 500BIM01 has a total of 24 binary inputs. These are divided into pairs, each pair having a common connection. Each input pair can be used for a double point indication. Provision is made for configuring whether the signals connected to a contact pair should be processed as single point indications, as double point indication or both of them.

The detection of the statuses of double signals and the supervision of the run-time between them are performed in the binary input unit. They are then processed by the central processing unit 500CPU03 and transferred to the next higher control level as a single signal which can be unequivocally interpreted.

The operating time supervision for double point indications can be individually configured for each double point indication (Table 4).

There is also a parameter for every double point indication which when configured suppresses the intermediate position. When this parameter is set, the intermediate position is not included in the status information of the double point indication. In this case, the last valid status, i.e. the last end position, is maintained until the new end position is reached. The status of the intermediate position is transferred, however, should the set operating time be exceeded.

2.1.6 Generation of events

Whenever the status of a signal changes, an event described the kind of change and the accurate time it occurred can be generated. This is done in the function block “Monitoring” (Figure 2). The following events can be configured for the three different types of signals (also see Section “Event processing”):

Single point indications (SPI):

- Negative Going
- Positive Going

Double point indications (DPI):

- Intermediate (00)
- Open (01)
- Closed (10)
- Disturbed (11)

Double point indications can generate events in the end positions “Open” (01) and “Closed” (10), the defective position (11) and when the operating time is exceeded in the intermediate position (00).

3 Settings

3.1 500BIM01

Table 3: Settings for each binary input unit 500BIM01

Parameter	Range	Unit	Default	Description
Name Customer	20 ASCII characters	-	500BIM01	Customer’s designation for the binary input unit [1])
Name Supplier	20 ASCII characters	-	500BIM01	Supplier’s designation for the binary input unit [1])
Max. Oscillation Time	0 .. 65535	0.1 s	30000	Max. oscillation suppression time. After this time has elapsed the counter is set to 0 and the supervision restarts. The suppression time is infinity for a setting of 0.
Min. Number Of Transitions	0 .. 127	-	7	When the oscillation counter falls below this setting the oscillation suppression becomes inactive
Max. Number Of Transitions	0 .. 127	-	10	When the oscillation counter exceeds this setting the oscillation suppression becomes active
Decrement Rate	32, 64, 128, 256, 512, 1024, 2048	ms	2048	Cycle time for decrementing the oscillation counter

[1]) The selection which text is shown on the EMI screen and on the LCP display is done by means of the Builder tool when generating the database download file for REC 580.

Table 4: Settings for each binary input group (i.e. two optocoupler inputs with common negative pole) on 500BIM01

Parameter	Range	Unit	Default	Description
Battery Voltage	18 .. 312	V	110	Nominal battery voltage U_{rDC} Pick-up, reset thresholds of binary inputs: U > 75%, U < 70% U_{rDC} ($120 \leq U_{rDC} \leq 312$ V) U > 70%, U < 60% U_{rDC} ($60 \leq U_{rDC} < 120$ V) U > 60%, U < 40% U_{rDC} ($18 \leq U_{rDC} < 60$ V)
Max. Operating Time	0 .. 131000	ms	25000	Operating time supervision for switching objects
Intermediate Position Suppression	False True	-	False	Suppression of the intermediate position False = intermediate position generates an event, True = intermediate position does not generate an event

Table 5: Settings for each binary input channel on 500BIM01

Parameter	Range	Unit	Default	Description
Debounce Time	0 .. 127	ms	20	Contact bounce filter time
Low Active	False True	-	False	Signal inversion False = input not inverted, True = input inverted

3.2 500BOM01

Table 6: Settings for each binary output unit 500BOM01

Parameter	Range	Unit	Default	Description
Name Customer	20 ASCII characters	-	500BOM01	Customer's designation for the binary input unit [1])
Name Supplier	20 ASCII characters	-	500BOM01	Supplier's designation for the binary input unit [1])

[1]) The selection which text is shown on the EMI screen and on the LCP display is done by means of the Builder tool when generating the database download file for REC 580.