Contents Page

Technical overview brochure 3–3

Requirements 3–33

General..... 3–33

Voltage transformers 3–33

Current transformers 3–33

Classifications 3–33

Serial communication 3–34

LON..... 3–34

MVB process bus 3–34

Engineering and downloading PC..... 3–34

Bay control terminal

REC 580*3.0

1MRK 511 059-BEN
Page 1
Issued September 1999
Changed since October 1998
Data subject to change without notice

(REC580_1.tif)

Features

The bay control terminal REC 580 is a numerical control device for the automation of complex high-voltage substations. It is a product in the ABB PANORAMA station automation system.

Because of its modular structure, the unit can be adapted to suit the specific station layout and the modular architecture is designed for parallel processing. The unit has a station bus (LON) and a process bus (MVB) interface. Actuators and sensors can be connected via the process bus.

Application

- Suitable for all types of substations, gas-insulated switchgear (GIS) and outdoor substations (AIS)
- Intended for new substations or modernisation of existing substations
- For installation in the bay cubicles or in separate control cubicles remote from the bay, with or without local control display
- Effective replacement for conventional control circuits using logic modules, relays and associated wiring, control board and alarm annunciator
- Connection to the process via direct I/O's in the bay unit or advanced sensors and actuators integrated in the switchgear via the process bus.

Control functions

- Control of circuit-breakers, isolators, earthing switches and fast earthing switches
- Automation of
  - Tap-changers and power transformer regulators for parallel transformers, grounding inductors (Petersen coils) and capacitor banks
  - Switching sequences, e.g. switching between busbars
  - Implementation of specific user functions
- Determination of status and supervision of plausibility
- Monitoring and forcing of signals
- Duplicate or single output signals
- Generation of set-points
- Supervision of switchgear operating times
- Internal bay interlocking
- Interlocking between bays with exchange of signals via the station bus (LON).

Automatic functions

- Single and/or three-phase multi-shot auto-reclosure
- Continuous mode synchrocheck
- Voltage check

Features (cont'd)

Measurement
- Measurement of the instantaneous currents and voltages
- Computation of:
  - rms values of U and I
  - Active, reactive and apparent power (single and three-phase)
  - Energy values
  - Power factor and frequency

Process supervision
- Sequential event recorder with a resolution of 1 ms
- Oscillation suppression
- Circuit-breaker operations counter

Specific user functions
- Extensive library of control macros based on IEC 61131 for executing specific user functions
- Simple adaptation of bay functions using a function block programming language according to IEC 61131

Self-monitoring
- Continuous self-monitoring with display of system status, signalling of watchdog outputs and provision for status information to the overall control system

Serial interfaces
- Interface for station bus (LON)
- Interfaces for process bus (MVB)
- Optical interface for service PC on the front

Local control facility
- Large electroluminescence display for single-line representation of the bay with 13 LED's, 11 of which are two-colored with clear text display
- Small LCD display with 3 LED's and a 4-line text alternatively

Modular design
- Inputs/outputs
- Communication interfaces
- Software modules

Application

REC 580 is a numerical multifunction control terminal for the automation of gas-insulated switchgear and complex outdoor high-voltage substations. It performs control and automation functions for the High Voltage switchgear bays. Simple configurable standard functions and macros enable specific user requirements to be implemented quickly and reliably. The terminal is configured using a graphical programming language conforming to IEC 61131.

A REC 580 is also a cost-effective replacement for logic modules, control contactors, interlocking relays, control boards and alarm tables in conventional switchgear bay control systems. It also eliminates the associated wiring on a massive scale.

The terminal is able to communicate with other bay control units, protection relays in the bay, telemetering stations or other devices via the station bus interface, providing they are also equipped with the same interfaces as the REC 580. It can also be fully integrated in a central substation control system (Fig. 1).

The REC 580 bay control terminal supports the connection to process interfaces with advanced sensors and actuators (PISA), and conventional sensors (CT and PT) and operating mechanisms.

The command sequences and the correct operation of the switchgear are performed with supervision and safety according to industry standard requirements for personnel and equipment security.

The primary system variables current, voltage, active and reactive power, power factor and frequency are available for load measurements. Provision is also made for transmitting metered power values or power counting impulses to the central substation control system.

Design

The bay control terminal REC 580 is an integral part of the PANORAMA station automation system.

The integration of the bay control terminal in the PANORAMA substation automation system is shown in Fig. 1.

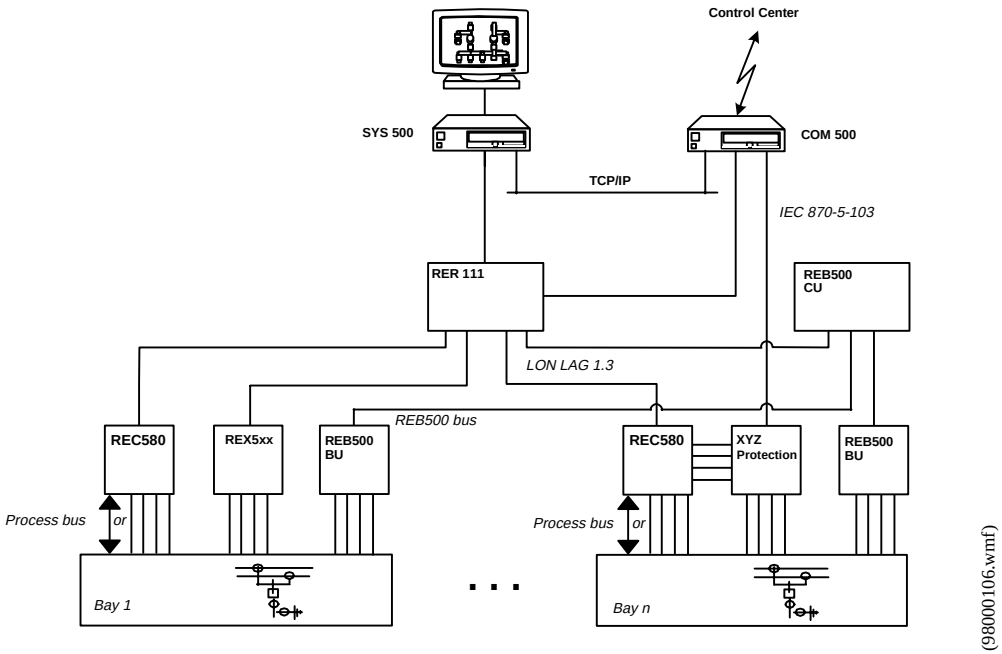

COM	Communication unit	RER	Optical Star Coupler
REB/CU	Busbar protection/central unit	REx 5xx	ABB bay-related protection
REB/BU	Busbar protection/bay unit	SYS	Station computer
REC	Bay control unit	XYZ protection	non-ABB bay-related protection

(non-ABB protection may be connected either via parallel wires or via IEC 870-5-103 interface)

Fig. 1 Bay control terminals as part of a typical station automation system

The analog-to-digital conversion of the input variables takes place immediately after the input transformers mounted in the unit. The signals are then in digital form and can be processed by microprocessors running the application programs. Because of the numerical processing techniques used, the accuracy and sensitivity remain unchanged throughout the operational lifetime of the terminal, thereby reducing the demand for maintenance.

In its simplest use, the REC 580 allows an efficient application as "stand-alone" bay control terminal as substitute for conventionally executed secondary technique. Serial connections are possible via existing interfaces; other bay control units, protection devices, telemetering stations, local screen control. Thereby a station automation system can be built up from individual bay control terminals.

The process inputs satisfy the usual EMC requirements in a High Voltage plant. The bay control terminal REC 580 is connected directly to the switchgear control and auxiliary contacts and the main c.t's and main p.t's without the need of interposing transformers, contactors or intermediate relays. Input and output modules are added to adapt the terminal for use with the different sizes of switchgear bays or substations. The control functions performed by the bay control terminal are selected from the library of function modules and macros. These enable the bay control terminal to be adapted easily to dedicated user requirements. The individual inputs and outputs are then assigned to their respective control functions by the application software. Provision is made for adding a further electronic equipment rack to REC 580 in case the number of signals need to be expanded.

Design (cont'd)

The bay control terminal can be configured for the serial, standardized system station bus LON. The station bus permit system-made communication with other control and protection units and also with the station control level.

The block diagram of an REC 580 is shown in Fig. 2. The internal structure of the unit with its Versa Module Euroboard (VME) bus according to IEC821 allows functions to run on several CPU's in parallel. The process bus is an important innovation, because it dramatically reduces the volume of control wiring running through the station and allows the use of the latest technology with intelligent sensors and actuators.

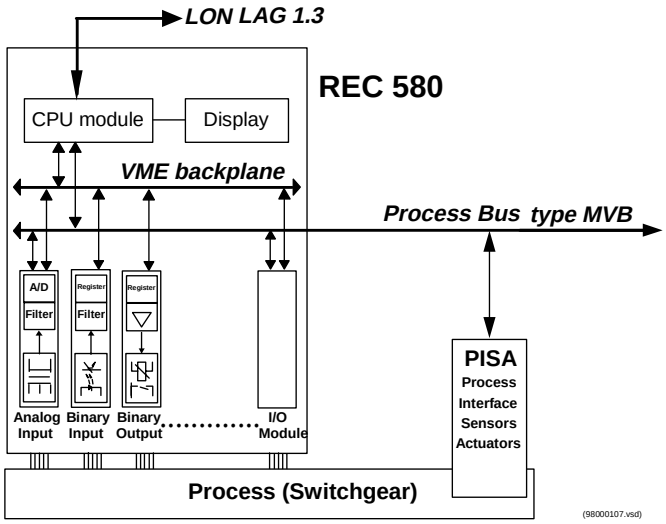

Fig. 2 Block diagram of REC580

Continuous supervision of power system functions, the operation of the bay, the switchgear and the functions of the bay control terminal itself increase the reliability and availability of the station as a whole, and reduces the need for maintenance.

Hardware

The hardware of the bay control terminal REC 580 comprises a number of different modules chosen to suit the particular requirements. The following modules are available (see schematic layout in Fig. 3 and the device composition list below):

- Central processing module and corresponding interfaces
- Process bus (MVB) controller module
- Input transformer module
- Insulating transducers module for mA, V signal inputs
- Analog input modules
- Binary Input module
- Binary Output module
- Auxiliary supply modules
- Housing with backplane
- Optical interface for communication with other bays and the station control level (LON)
- Optical interface for communicating with intelligent sensors and actuators, (PISA)
- Optical interface for an extension rack (MVB)
- Front socket for connecting a service PC

Input transformer modules

The purpose of the input transformers is to electrically insulate the analog input variables and reduce their signal level to a value suitable for processing by the electronic circuits. A REC 580 bay control terminal can contain

up to 2 transformer units. Depending on the type a maximum insertion of 13 transformers per transformer module is possible.

Isolating transducer module
The isolating transducer module enables the galvanically separated small signals (±20 mA, ±5 mA, ±10 V) to be transmitted to the analog input module. Each channel can either be set or cut out separately for the ranges stated above.

Analog input modules
In the analog input modules, the analog variables are filtered to eliminate the aliasing effect and to suppress high frequency interference. Depending on the particular type of analog input module in use, the analog signals are then sampled at a rate of either 1000 Hz (50Hz) resp. 1200 Hz (60 Hz) to convert them into digital signals. The A/D conversion has a dynamic response of 16 Bit. A digital signal processor (DSP) pre-processes the signals before transferring them to the memory in the central processor module.

An analog input module has a capacity of 16 signals and according to system configuration, there can be up to 2 modules in a rack to be applied if input transformer modules and/or isolating amplifier units are used.

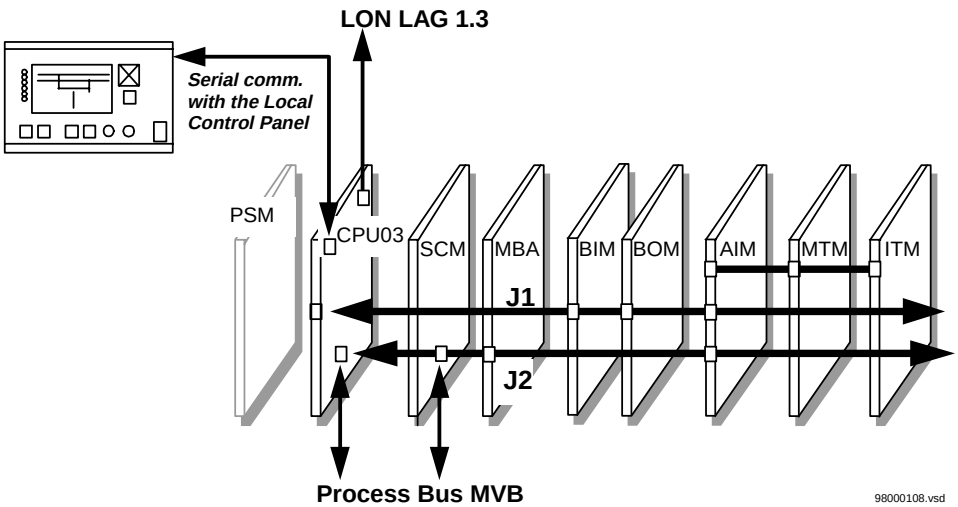

CPU	central processing unit	J2	backplane lower part (MVB bus)
SCM	star coupler module (required for more than two external fibre links)	AIM	analog input module
		MBA	MVB process bus administrator
BIM	binary input module	MTM	mixed transformer module
BOM	binary output module	ITM	isolation transducer module
J1	backplane upper part (VME bus)	PSM	power supply module

Fig. 3 Schematic rack layout

Processor modules
Processor modules include essentially the processor part itself with Motorola microprocessors and communication controller modules for the VME bus, the station bus type LON and the process bus type MVB. They control the interface on the front of the terminal for connecting the service PC, the interface at the rear of the terminal for communicating with the station control system according to LON, and the interface at the rear to the process bus type MVB.

After the signals have been conditioned and pre-processed in other modules the processor modules execute the algorithms and logic functions as determined by the configuration and application program of the individual REC 580. The processor modules then transfer binary signals to the output modules for actuating the auxiliary output relays.

Local control on the front of the unit
There are two different local controls available:

- A simple local control facility. This is performed by a four-line LCD with cursor control.

Hardware (cont'd)

- A graphical electroluminescence display with local control facility. This facility can replace a conventional control board for the display and control of a bay including an alarm annunciator.

The functions of the bay unit are conveniently configured and the values of variables and definition of events read by plugging a service PC into the interface on the front.

Binary input/output modules
Binary signals are connected to the system via optocouplers and application-specific integrated circuits (ASIC's). Their pick-up levels can be individually set and, therefore, only one type of module is needed for voltages from 18 V DC to 312 V DC. The I/O module pre-processes and, if applicable, time tags the signals before transferring them to the corresponding processor units.

Installation
The REC 580 casing is provided with openings for cooling air circulation. The vertical spacing between REC 580 when installed in panels shall be ≥100 mm to allow the cooling air to pass through the openings.

Functions

Switchgear control
To ensure fail-safe control, commands from the local control panel respectively from the local control module of the REC 580 or the substation automation system are issued via binary outputs either by a 1½ channel (independent control signal plus a common control signal) or a 2 channel type (two independent control signals). The signals that continuously indicate the actual positions of the switchgear are duplicated (double indication) and subjected to a plausibility test.

All switchgear commands are interlocked both with respect to the other switching devices in the bay and stationwide to exclude dangerous, unwanted, inadmissible or simultaneous switching operations. The monitoring and interlocking control functions are programmed in function modules and can be easily adapted to the requirements of the specific installation and the dedicated operation philosophy.

The bay control terminal REC 580 can be freely configured to control and monitor all the functions in a switchgear bay. The same applies to the interlocking logics included in REC 580. Logical connections beyond a single bay are established either by a serial exchange of data via the serial station bus type LON (preferred) or by a conventional parallel ring line (option) linking all the bays.

The operator controls the bays via a local control unit, a local mimic or the substation automation system.

The following functions are provided for controlling the bay manually:

- indication of the positions of the various switching devices
- push-button for issuing control commands
- switching over between remote and local control, inhibiting the control voltage (key switch "Remote/Local/Off" on the local mimic board in position "Off") if required
- switching over from "Operation" to "Set", in order to enter respectively change parameters
- optional switching between interlocked and non-interlocked control (interlocking override)

All control operations can be carried out using the local control facility.

Auto-reclosure function
Different auto-reclosure cycles can be performed according to the capabilities of the circuit-breaker. The delay time for fast or slow auto-reclosure can be set independently for each cycle. If single-phase auto-reclosure has been set, the first shot is single-phase and the subsequent shots three-phase. Auto-reclosure can be initiated either internally in the bay unit or by external protection devices via opto-coupler inputs.

Continuous mode synchrocheck function
The optional synchrocheck function determines the difference between the amplitudes, phase-angles and frequencies of two voltage vectors. A dead line or dead bus voltage check logic is also included. The release or blocking signal at the output is applied to the control logic. An AIM02 module is required for the synchrocheck function. Analog values from the process bus type MVB are not supported.

Measurement function

The measurement function calculates the single-phase rms values of voltage and current and the single and three-phase active and reactive powers. In the case of three-phase voltage inputs, either phase-to-neutral or phase-to-phase voltages can be formed.

The bay control terminal REC 580 can be equipped with different transformer units.

The following data are provided basically by calculation of the instantaneous values of current and voltage measured:

- rms currents and voltages

Furthermore the following data are provided by data processing optionally:

- Active and reactive powers, apparent power, power factor and frequency
- Energy values (for operational purposes)
- Minima and maxima of various variables (current, voltage, power etc.) over set periods of time
- Operating hours
- Number of circuit-breaker operations
- Pulse counting fed via binary inputs from an external source.

Event recording function

The bay control terminal REC 580 records the last 1000 (configurable) events. The events can be stored in 8 queues, and the maximum configurable number of event in a queue is 1000. A real-time tag with an accuracy of 1 ms is attached to every event. Saved events can be viewed on the bay control terminal on the electroluminescence display and can be accessed at the station level and all related network control levels.

The real time clock is synchronized by a GPS or DCF via the substation automation system.

When configuring the system, the user defines which signal and status changes are handled as events.

Typical examples are:

- Changes of binary input signal state
- Commands from the local control facilities or from the control system
- Alarms generated by the self-monitoring function
- Switch-over between local and remote control.

The strategy of the behaviour at full memory is selectable:

- save the oldest value
- save the latest value
- save the oldest and the latest value.

Supervision functions

Continuous supervision of the power system, the bay functions, the switchgear and the operation of the bay control unit itself contribute to the high availability and availability of the station as a whole. In REC 580 a watchdog gives alarm displayed on an LED on the front of the terminal and the alarm signal is processed in the station control system when a failure is detected. In particular, the integrity of the external and internal supply voltages are monitored. The correct function and tolerances of A/D converters are verified by cyclically converting a known reference voltage. Special background algorithms regularly check the processor memories. The execution of the application program is supervised by a watchdog in each of the processors.

Because of the extensive self-diagnosis and monitoring functions, the requirement for periodic maintenance and testing is reduced.

Data exchange

The bay control terminal REC 580 is equipped with the following serial interfaces:

- Interface at the front for the service PC. Recorded events can be accessed for viewing and processing and the unit can be configured and set via this interface.
- LON as station bus at the rear. The exchange of data with the station or higher levels and other bay control units and protection devices takes place via this interface.
- MVB as process bus at the rear: This interface ensures the data communication with the extension rack, and with sensors and actuators (PISA).

Functions (cont'd)

Local control of the bay control terminal REC 580
The basic local control facility on the bay control unit is the four-line LCD and its cursor which enables measured variables, alarms and the statuses of binary input and output signals to be viewed.

A larger electro-luminescence display with a single-line diagram of the bay is available as an option which in addition enables the display of the event list, clear texts related to the 11 two-colored LED's and diagnostic information. Parameters can also be displayed and edited.

The second possibility for the local control facility consists in connecting a service PC to the optical interface on the front of the bay unit. A menu-guided program enables the operator to:

- change settings
- view and modify parameters
- load programs
- view events
- monitor the statuses of binary inputs and outputs and analog inputs on-line

The human-machine interface (service PC) for the bay control terminal REC 580 is designed so that only little reference has to be made to a user manual. This is achieved by:

- menu-guided selection of functions using windows techniques
- provision for creating and testing sets of parameters settings off-line and then downloading them to the bay unit
- enabling the user to enter comments describing all inputs and outputs.

Engineering

The application engineering for a bay control terminal REC 580 and associated control system is accomplished using "stand-alone" software tools which run independently under MS Windows NT™ as well as in the system engineering environment.

The stand-alone software tools are suitable for engineering all installations with all types of bay units. They provide facility for programming, setting, testing and commissioning the various bay units.

Stand-alone engineering tools for bay engineering of REC 580
Engineering of a bay control terminal REC 580 includes the following steps:

- Configure hardware
- Setting parameters of the bay control terminal
- Engineering of signals from input channels up to bus communication
- Programming of functions that run on the bay control terminal

Configuration and parametrization of the hardware as well as signal engineering is done using CAPE/C - CAP 580. This is a powerful tool to master the complete functionality of the bay control terminal REC 580. The user interface is realized using menus, interaction is done via keyboard and mouse according to Microsoft-Standard. An on-line documentation supplies an introduction and reference manual for the user. All user input is checked for consistency. Data is stored in an object-oriented database which allows to reuse reference projects as a whole or in parts. If parts of a reference project are copied into a current project, all relevant information is copied and adapted to the settings of the current project automatically.

The signals entering the bay control unit are taken from the circuit diagram via an automatic transfer of signal data from CAD tools into CAPE/C -CAP 580. The transfer avoids redundant data entry and ensures consistent signal naming throughout the project.

CAPE/C-CAP 580 supports configuration of signals, events, alarms, pick-up settings, contact bounce filters and bus parameters by entering the corresponding data in dialogues.

Signal names are entered once and are used consistently through all levels of the system. Thus a signal can be traced from source to sink and vice versa. Signal engineering is done by simply defining a start and an end location for a signal. Device-specific address information and internal signal flow are calculated automatically by the engineering tool.

Standardized interfaces (DDE™, OLE™) allow bi-directional data exchange with standard tools from Microsoft™ as well as relational databases such as Microsoft Access™.

Using these mechanisms, project documentation is generated by extracting signal data and parameter values directly from the project

database and writing lists into Microsoft Excel™ via an OLE™-interface. Using the current project database as the basis for document generation ensures consistent and up-to-date project documentation.

The function chart tool conforms to IEC 61131-3 and enables the bay control terminal REC 580 to be programmed and tested quickly whenever necessary. The main advantages of the tool are the following:

- The graphical programming language defined in IEC 61131-3 is derived from the function charts prescribed in IEC 60848 for documenting control systems. It generates an executable program code from the function charts which is downloaded to the bay terminal and runs on the processors. The documentation for the bay terminal control system is created while the program itself is being developed graphically in the function charts and the compilation of the program code from the graphic function charts is performed automatically.
- The function modules from which the programs are constructed include simple AND, OR and flip-flops as well as complex functions for complete control of switchgear devices, and processing the return confirmation signals. They are contained together with their documentation in a function block library. Programs for the control systems of every type of substation can be assembled from the library.

The bay control terminal REC 580 can only perform its control and signalling functions after the program and settings have been downloaded to it. This takes place via an optical interface on the bay control terminal or via the station bus.

System engineering

The description of the engineering of complete substation automation systems is not part of this REC 580 Technical Overview Brochure. But since the REC 580 is used in many cases as system component, the strength of the REC 580 depends on the existence of the powerful engineering tool box described in a separate document. This tool box not only supports REC 580 but all control, protection, monitoring and communication components in the substation by system engineering functions from system design to function engineering, signal engineering, picture design and database engineering.

Within the tool box, CAPE/C links the bay (stand-alone) engineering tools like e.g., CAPE/C - CAP 580 and LIB 580 to an overall system-engineering environment and automatically checks the data consistency through all applications of a project

Engineering (cont'd)

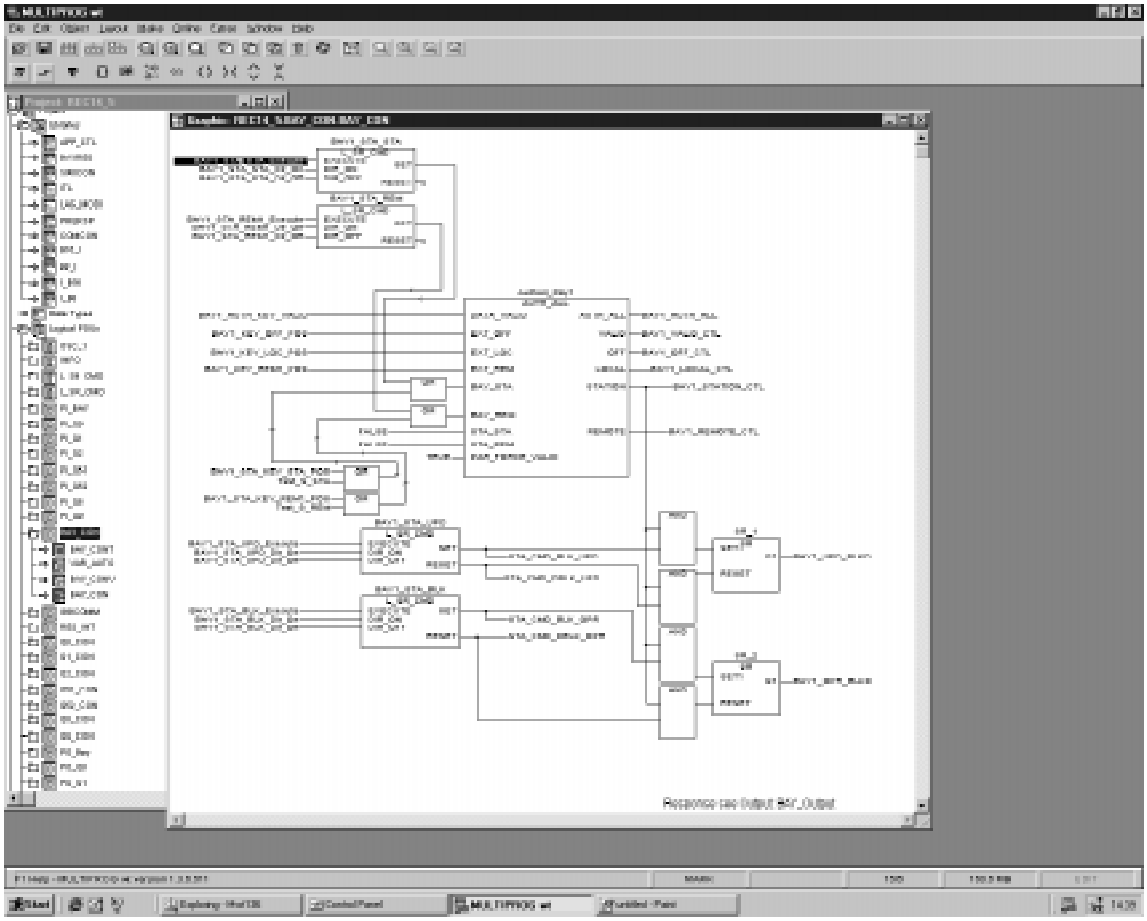

Fig. 4 Example of a graphic function chart as defined by IEC 61131-3

Testing and commissioning

The function chart tool includes a testing routing for checking the integrity of the function charts and commissioning the program in the bay control terminal which superimposes the current values and statuses of signals on the function chart. Provision is also made for the commissioning engineer to simulate the values of signals for test purposes by overwriting them in the function chart and for viewing events.

Display, controls and interfaces

(REC580_1.tif)

Fig. 5 Front view of REC 580 with large electroluminescence display

The local control facility with electroluminescence display has the following components:

- 12.5 cm x 20 cm display
- 13 LED's
- 2 key switches
- 9 keys
- Infrared front socket for the galvanically separated connection of a service PC

The local control panel contains:

- The display of the single-line diagram with the actual switching state of the bay
- Information pages for alarms, events and measurements
- Menu-guided control for reading of process and system data
- Menu for the changing of parameters
- 11 two-colored (red/green) configurable LED's able to be allocated to alarm texts and texts of statuses, and a green LED for the display of the availability
- 1 key switch for the selection "Off", "Local" and "Remote"
  - "Off": the control voltage is inhibited
  - "Local": control is enabled directly from the local control facility
  - "Remote": the switching authority is on the next higher level (station control or dispatch center)
- 1 key switch for "Set", "Operation"
  - "Set": changing of system parameters
  - "Operation": normal position
- 9 pushbuttons for local control, the function of which depends on the actual display page.

Display, controls and interfaces (cont'd)

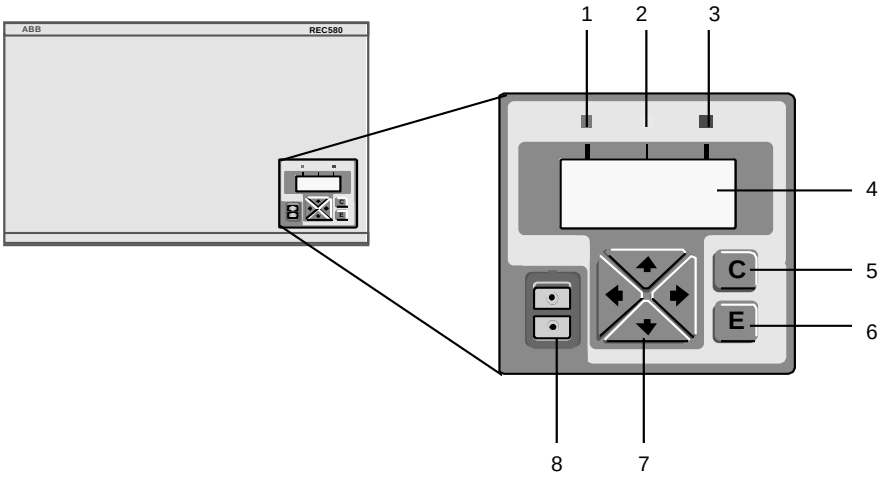

Fig. 6 Front view of REC 580 with small LCD display

Legend:

1. Green LED indicating that the bay control terminal REC 580 is running
2. Yellow LED signalling a general alarm by the primary equipment
3. Red LED indicating a failure in the REC 580
4. Four-line LCD for displaying system information in different windows
5. Close (C) button for closing a window
6. Enter (E) button for selecting the active window
7. Cursor buttons for navigating through the windows
8. Infrared socket for the electrically insulated connection of a PC

Rear of the bay control unit REC 580

The optical interfaces for communication and the process connections are located at the rear of REC 580.

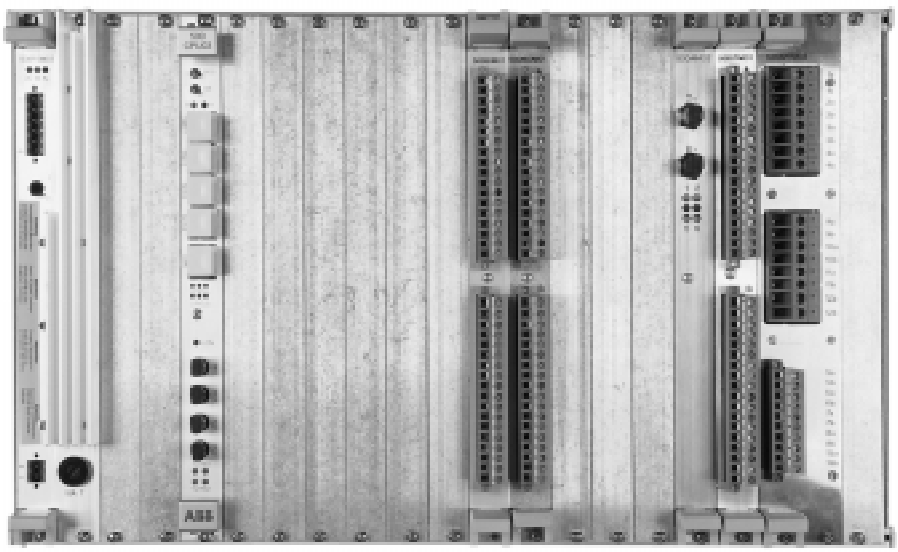

(REC580_2.tif)

Fig. 7 Rear view of REC 580

Device composition

Basic rack
The basic rack has 21 slots for installing the various kinds of modules

O Preferred slot
o Alternative slot or slot for additional boards
X Slot used by a board using 2 slots
Remarks: Additional slots are always used to the right of the board
Cover plates are always delivered for non used slots

Table 1: Possible configuration using 500CRB02 backplane

Slot	1	2	3	4	5	6	7	8	9	10	11	12	13	14	15	16	17	18	19	20	21
500PSM02	O	X																			
500PSM03	O	X																			
500CPU03					O																
500MBA02				O																	
500SCM01				o		O	o	o	o	o	o	o	o	o	o	o	o	o	o		o
500BIM01							o	o	o	o	o	o	o	o	o	o	o	o	o	o	o
500BOM01							o	o	o	o	o	o	o	o	o	o	o	o	o	o	o
500AIM02																	O				O
500ITM02 *)														O				O			
500MTM02**)															O	X			O	X	

*)only in combination with a 500AIM02 module
**)only in combination with a 500AIM02 module

Table 2: Possible configurations using 500CRB01 backplane

Slot	1	2	3	4	5	6	7	8	9	10	11	12	13	14	15	16	17	18	19	20	21
500PSM02	O	X																		o	X
500PSM03	O	X																		o	X
500CPU03					O																
500MBA02				O																	
500SCM01				o		O		o	o	o	o	o	o	o	o	o	o	o	o		
500BIM01								o	o	o	o	o	o	o	o	o	o	o	o		
500BOM01								o	o	o	o	o	o	o	o	o	o	o	o		
500AIM02															O				O		
500ITM02 *)												O				O					
500MTM02 **)													O	X			O	X			

*)only in combination with a 500AIM02 module
**)only in combination with a 500AIM02 module

Device composition (cont'd)

Extension rack
If there is insufficient space in the basic rack for all the modules that are needed, they can be accommodated in a second rack. The rack layout is the same as for the basic rack except that it does not have a local operator control interface or, a processor, adapter, and process controller modules.

The extension rack is connected to the basic rack via the MVB process bus. A 500MBA02 is required in the basic rack and a 500AIM02 is required in the extension rack. The 500CPU03 in the basic rack shall be provided with a 500PBI01 in the Industry Pack slot D.

For connection to the basic rack a supplementary star coupler module 500SCM01 is necessary if there are no analogue input units 500AIM02.

The supplementary rack is connected to the main rack by the optical process bus

O Preferred slot
o Alternative slot or slot for additional boards
X Slot used by a board using 2 slots
Remarks: Additional slots are always used to the right of the board
Cover plates are always delivered for non used slots

Table 3: Possible configuration using 500CRB02 backplane in the extension rack

Slot	1	2	3	4	5	6	7	8	9	10	11	12	13	14	15	16	17	18	19	20	21
500PSM02	O	X																			
500PSM03	O	X																			
500AIM02																	O				O
500ITM02 *)														O				O			
500MTM02 **)															O	X			O	X	

*)only in combination with a 500AIM02 module
**)only in combination with a 500AIM02 module

Table 4: Possible configuration using 500CRB01 backplane in the extension rack

Slot	1	2	3	4	5	6	7	8	9	10	11	12	13	14	15	16	17	18	19	20	21
500PSM02	O	X																		o	X
500PSM03	O	X																		o	X
500AIM02															O				O		
500ITM02 *)												O				O					
500MTM02 **)													O	X			O	X			

*)only in combination with a 500AIM02 module
**)only in combination with a 500AIM02 module

Module description

Supply modules 500PSM02 and 500PSM03
The auxiliary supply unit is a DC/DC converter with an output power of 60 W (500PSM02) or 100W (500PSM03). Input voltages in the range 36 V DC to 312 V DC are permissible without any switching of ranges. A second supply unit can be inserted on the right of the rack with 500CRB01 backplane, to achieve redundancy or to supply a higher load. Power dissipation higher than 60W require forced cooling by fan.

Processor module 500CPU03
The application programs are installed in the processor units. The processor module also serves as controller for the internal VME bus. It is equipped with a powerful processor and has two sockets (C and D) for ”industry pack” modules. Such modules are:

- 500LBI02 (pos. C): Data exchange with the station bus LON
- 500PBI01 (pos. D): Data exchange with the process bus MVB

Process bus controller module 500MBA02
The process bus controller module has its own processor and controls the exchange of data via MVB.

Star coupler module 500SCM01
The star coupler module converts the electrical bus signals to optical signals. It has a set of 5 optical transmitter/receiver pairs for connection to other modules (e.g. an additional REC 580 rack or distributed I/O modules). Different electrical process bus signals can be assigned to the 5 optical star coupler interfaces.

Input transformer module 500MTM02
The input transformer module can at ordering be populated with protection grade current transformers (ct), metering grade current transformers (mct), and potential transformers (pt).

The configuration must be stated when ordering (see technical data “Table 18: Selection table of transformer types for ordering 500MTM02” and the ordering section):

Number and types of the protection c.t's, the metering c.t's and the p.t's.

Moreover the rated voltages and the rated currents must be stated. Rated values to be selected:

- rated voltage 63 V, 110 V, 220 V
- rated current 1 A, 5 A

Other rated values can be covered with the transformers stated above by adapting the configuration (e.g. 100 V, 2 A).

Insulating transducer module 500ITM02
The isolating amplifier module allows the registering of small signals. The unit contains 3, 8 resp. 16 input channels. The following small signals can be connected:

±5 mA, ±20 mA, ±10 V.

Analog input units 500AIM02
This module is used to convert the analog signals from the outputs of the input transformer or insulating transducer modules into digital signals for processing.

The analog input module is combined with the 500MTM02 and the 500ITM02 (see technical data).

If both the 500ITM02 and the 500MTM02 modules are placed beside an 500AIM02, care must be taken not to source one and the same channel by both modules.

Binary Input module 500BIM01
The binary input module 500BIM01 has 24 binary opto-coupler inputs (grouped in pairs).

Binary Output module 500BOM01
The binary output module 500BOM01 has 22 contact outputs, six of which are equipped with a 1 mA trip coil supervision.

Forced cooling fan module 500LFE01
The forced cooling fan module 500LFE01 is provided with 4 cooling fans. Each fan speed is supervised and an alarm is given on low fan speed.

The forced cooling fan module adapts the cooling air volume to the ambient temperature with full air volume at 55°C. The 500LFE01 is 44 mm high and shall be mounted directly under REC 580*3.0. The 500LFE01 can be supplied with 90-250 V DC.

Technical data

General data

Table 5: Temperature ranges:

- Within specification	-10 °C to +55 °C	IEC 255-6, 1988
- Storage	-40 °C to +70 °C	IEC 255-6, 1988

Table 6: Atmospheric environment

	Parameters	**Standard**
Relative humidity	93%/40 °C/4 d	IEC 68-2-3

Table 7: Mechanical environment

	Parameters	**Standard**
Vibration		
Response	2 to 150 Hz, 0.2 - 0.5 gn	IEC 255-21-1/class 1 IEEE 344
Endurance	10 to 100 Hz, 1gn	IEC 255-21-1
Seismic	2 to 35 Hz	IEC 255-21-3/class 2 IEEE 344
Shock-test		
Response	18 * 5 gn, 11 ms	IEC 255-21-2/class 1
Withstand	18 * 15 gn, 11 ms	IEC 255-21-2/class 1
Bump	1000 * 10 gn, 16 ms	IEC 255-21-2/class 1

Table 8: Auxiliary supply 110 V DC with PSM03 rated output power 100 W

Auxiliary supply 110 VDC with PSM03	**Rated output power 100 W**
Power consumption - normal condition - operate	 72 W 76 W with 2 plug in units BOM01 (all relays were activated)

Table 9: Electrical environment

		Parameters	**Standards**
DC supply voltage	operate	36 to 312 V	
DC interruption		>50 ms	IEC 255-11
AC component (ripple) on DC		>12%	IEC 255-11
DC ramp		0% - 100%/1 s, 10 s, 1 min 100% - 0%/1 s, 10 s, 1 min	
Crosstalk performance at optocoupler-inputs		aux. supply/couple-capacity 110 V to 300 V DC 220 nF to 1000 nF	
Clearance and creepage distance			IEC 255-5
Current transformers thermal ratings continuous short duration overload Power consumption at I_n		 4 * I_n 30 * I_n / 10s 100 * I_n 1s 250 * I_n halve sine peak dyn. <0.05 VA	IEC 255-6

Table 9: Electrical environment

Voltage thermal ratings continuous short duration overload power consumption at U_n	 2 * U_n 3 * U_n / 10 s <0.15 VA	IEC 255-6
Contact ratings (signals) max. operating voltage continuous rating DC making capacity 0.5 s DC breaking capacity L/R = 40 ms U < 50 V U < 120 V U < 250 V	 300 VAC/DC <8 A AC/DC 30 A 1.5 A 0.3 A 0.1 A	
Insulation resistance	0.5 kV DC / >100 Mohm	IEC 255-5
Insulation, dielectric, general	2 kV AC / 1 min 2.5 kV AC / 1 min	EN 60950 IEC 255- /class C
Insulation, dielectric, across open relay contacts	1 kV AC/1 min Only for binary outputs without trip circuit supervision	EN 60950 IEC 255-5/class C
Impulse voltage	1.2/50 µs, 0.5 J, 5 kV	IEC 255-5/class 3
1 MHz burst disturbance	1 MHz, 400 Hz, 1.0/2.5 kV, 2 s	IEC 255-22-1/class 3
Electrostatic discharge	6/8 kV	EN 61000-4-4/class 3 IEC 1000-4-2/class 3
Fast transient on DC power lines	5/50 ns, 5 kHz, 4 kV	EN 61000-4-4/class 4 IEC 1000-4-4/class 4
Fast transient on signal lines	5/50 ns, 5 kHz, 2 kV	EN 61000-4-4/class 4 IEC 1000-4-4/class 4
Surge immunity	1.2/50 µs, 8/20 µs, 1/2 kV	EN 61000-4-5/class 3 IEC 1000-4-5/class 3
Radiated electromagnetic field disturbance, general	0.15 to 80 MHz, 10 V (80% amplitude modulated/1 kHz) (580 to 630 kHz, 8V)	ENV 50141/class 3 IEC 1000-4-3/class 3
Radiated electromagnetic field disturbance, Additional frequency sweeps	80 MHz to 1000 MHz 10 V/m (80% amplitude modulated/1 kHz)	ENV 50140/class 3 IEC 1000-4-3/class 3
Radiated electromagnetic field from digital portable telephones	900 MHz, 10 V/m, FM	ENV 50204/class 3
	1890 MHz, 10 V/m, FM	ENV 50204/class 3
Pulse magnetic field immunity	500 A/m (continuous field)	EN 61000-4-8 IEC 1000-4-8
Conducted and radiated RFI emission	30 MHz to 230 MHz, 40 dB µV/m, 10 m	EN 50081-2 class A EN 55011/55022
	230 MHz to 1000 MHz, 47 dB µV/m, 10 m	EN 50081-2 class A EN 55011/55022

Table 10: Mechanical design

Rack dimensions (wxhxd)	483 * 266 (6U) * 320 (max) (see other document)
Mass of a rack (depends on units fitted)	max. 18 kg
Frontplate controls	Small display: - 3 LED's for system signals - 6 pushbuttons - LCD with 4 x 16 characters - service interface

Technical data (cont'd)

Table 10: Mechanical design

	Large display: - 1 green standby LED - 1 red general alarm LED - 11 red/green LED's for alarms and statuses - 9 pushbuttons - key-switch Off/Local/Remote - key-switch Operation/Set - 12.5 cm x 20 cm electro-luminescence display - service interface
Control unit language	Large display: English, German, French, Spanish, Russian, ... (configurable) Small display: 7 bit ASCII characters only
Material of housing	Aluminium
Colour of housing	Light beige NCS 1704 Y15R
Location of terminals	Rear of binary I/O units and input transformer modules
Terminal data	Binary inputs: 2.5 mm^2 Binary outputs: 2.5 mm^2 Analog inputs: 4.0 mm^2
Enclosure protection class	- Housing: IP30 - Terminals: IP20

Table 11: Functions

Computing functions	- active power - apparent power - Power factor - Energy (KWh) - Frequency - Number of circuit-breaker operations
Other functions	- Bay interlocks - Station interlocks - Automatic switching routines - Transformer tap-changer control - Continuous mode synchrocheck - Auto-reclosure
Status information	Small display: - 3 LED's (standby, alarm and tripping) Large display: - 2 LED's (standby and general alarm) - 11 LED's with clear texts
Communication interfaces	- Station level: LON - Service: optical RS232 PC standard - Process level: optical MVB
Watchdog outputs	2 watchdog signal outputs
Accuracy of measurements acc. to Class IEC688	rms current 0.5 rms voltage 0.5 real power 1.0 reactive power 1.0

Table 12: Power supply module 500PSM02 and 500PSM03

Input voltage	36 to 312 V DC ≤80 W at full load and input voltage of 48 V (500PSM02) ≤140 W at full load and input voltage of 48 V (500PSM03)
Output	max. 60 W (500PSM02) max. 100 W (500PSM03)
Casing internal loss	max 20 W (500PSM02) max 10 W (500PSM03)
Voltage interruption bridging time	>50 ms
Application	Provision for the unit Redundancy concept

Note: Take account of individual module burdens

Table 13: Processor module 500CPU03

Ancillary modules	Sockets for: - Module for data exchange via the internal process bus, type 500PBI01 - serial interface for communication to other bays and to the station, type 500LBI02
Consumption	7 W

Table 14: Bus controller module 500MBA02

Function	Controls the exchange of data with the process bus MVB
Consumption	3 W

Table 15: Star coupler module 500SCM01

Function	Conversion of electric bus signals into optical signals 5 optical transmitter/receiver pairs for MVB process bus
Consumption	3.5 W

Table 16: Optical interfaces

Number of cores	2 fibre cores per bay unit
Core/sheath diameter	62.5/125 µm
Max. permissible attenuation	≤ 5 dB
Max. length	approx. 1200 m
Connector	type FST for 62.5 µm optical fibre cables

Technical data (cont'd)

Table 17: Input transformer modules 500MTM02

Current inputs	Rated current:	1 A or 5 A
	Rated frequency:	50 or 60 Hz
	Burden:	≤ 0.05 VA per input at In
	Thermal rating: continuous: for 10 s for 1 s dynamic	 4 x I_n 30 x I_n (protection), 10 x In (measurement) 100 x I_n (protection), 40 x In (measurement) 250 x I_n, half-cycle
	Accuracy:	protection ± 0.5 % of I_n in the range 0 to 1.2 I_n measurement ± 0.2% of I_n in the range 0 to 1.2 I_n
Voltage inputs	Rated voltage:	63.5 V, 110 V, 220 V
	Thermal rating: continuous for 10 s	 2 x U_n 3 x U_n
	Accuracy:	±0.2 % Un in the range 0.8 to 1.2 x Un
	Burden per phase	≤ 0.15 VA at U_n
Number of input transformers		up to 13 transformers

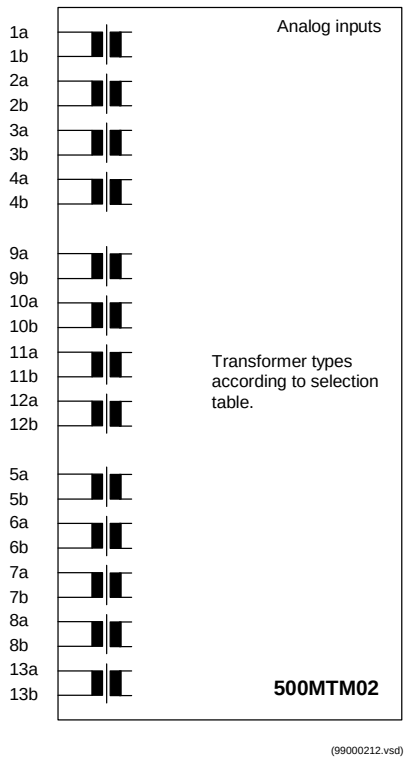

Fig. 8 Terminal designation of the input transformer module

Table 18: Selection table of transformer types for ordering 500MTM02

Channel	Transformer type
1	pt or mct or pct
2	pt or mct or pct
3	pt or mct or pct
4	pt or mct or pct
5	pt
6	pt
7	pt
8	pt
9	pt or mct or pct
10	pt or mct or pct
11	pt or mct or pct
12	pt or mct or pct
13	pt

pt (potential transformer) 63.5V, 110V, 220V
mct (measuring current transformer) 1A, 5A
pct (protection current transformer) 1A, 5A

Any channel may also be left empty. The empty channel is required, if the channel shall be supplied from a 500ITM02, or supplied from an optical voltage transducer type EOVT.

Table 19: Isolating transducer module 500ITM02

Input voltage and current				
linear range		overload		
- +/- 11 V peak value, bipolar		+/- 100 V peak continuous		
- +/- 22 mA peak value, bipolar		+/- 100 mA peak continuous +/- 250 mA peak < 1 sec		
- +/- 5.5 mA peak value, bipolar		+/- 40 mA peak continuous +/- 120 mA peak < 1 sec.		
electrical insulation		each channel is insulated from each other		
differential input		yes		
frequency		0...500 Hz max. attenuation < 0.05 dB max. error < 0.6 %		
cut-off frequency		>0.4 kHz		
no-load operation		yes		
input impedance ± 10 V ± 5 mA ± 20 mA		 200 kOhm 50 Ohm 200 Ohm		
Voltage input				
frequency	accuracy at 20 degrees Celsius	accuracy at the whole tempera-ture range	Offset	Linearity
< 200 Hz	0.1 %	0.1 % +/- 0.25 %	0.3 mV	+/- 0.1 %
< 500 Hz	0.6 %	0.6 % +/- 0.25 %	0.3 mV	+/- 0.1 %
< 1000 Hz	1.7 %	1.7 % +/- 0.25 %	0.3 mV	+/- 0.1 %

Technical data (cont'd)

Table 19: Isolating transducer module 500ITM02

Current input			
frequency	accuracy	Offset	Linearity
< 100 Hz	0.1 %	0.1 mV	+/- 0.1 %
< 1000 Hz	0.2 %	0.1 mV	+/- 0.1 %
Phase displacement			
frequency	voltage input (degree)		current input (degree)
< 100 Hz	< 0.125 +/- 0.15		< 0.2 +/- 0.05
< 100 Hz	< 2.5 +/- 0.15		< 0.3 +/- 0.05
< 1000 Hz	< 26 +/- 1		< 0.7 +/- 0.05

Table 20: Terminal and designation for 500ITM02, Pinout JA

Channel	**Connection**
1	JA/1-2
2	JA/3-4
3	JA/5-6
4	JA/7-8
5	JA/9-10
6	JA/11-12
7	JA/13-14
8	JA/15-16
Empty	JA/17-18

Table 21: Terminal and designation for 500ITM02, Pinout JB

Channel	**Connection**
9	JB/1-2
10	JB/3-4
11	JB/5-6
12	JB/7-8
13	JB/9-10
14	JB/11-12
15	JB/13-14
16	JB/15-16
Empty	JB/17-18

Table 22: Analog input units 500AIM02

Sampling frequency	1.0 kHz (50 Hz) 1.2 kHz (60 Hz)
Number of channels	16 channels
Consumption	6 W

Table 23: Binary input unit 500BIM01

24 opto-coupler inputs	- input voltage - burden - operating time - quiescent - 12 inputs activated with 250 V - 24 inputs activated with 300 V	18 to 312 V, configurable pickup 1 mA / 10 mA during 10 ms < 2.5 ms 1 W 4 W 8.2 W

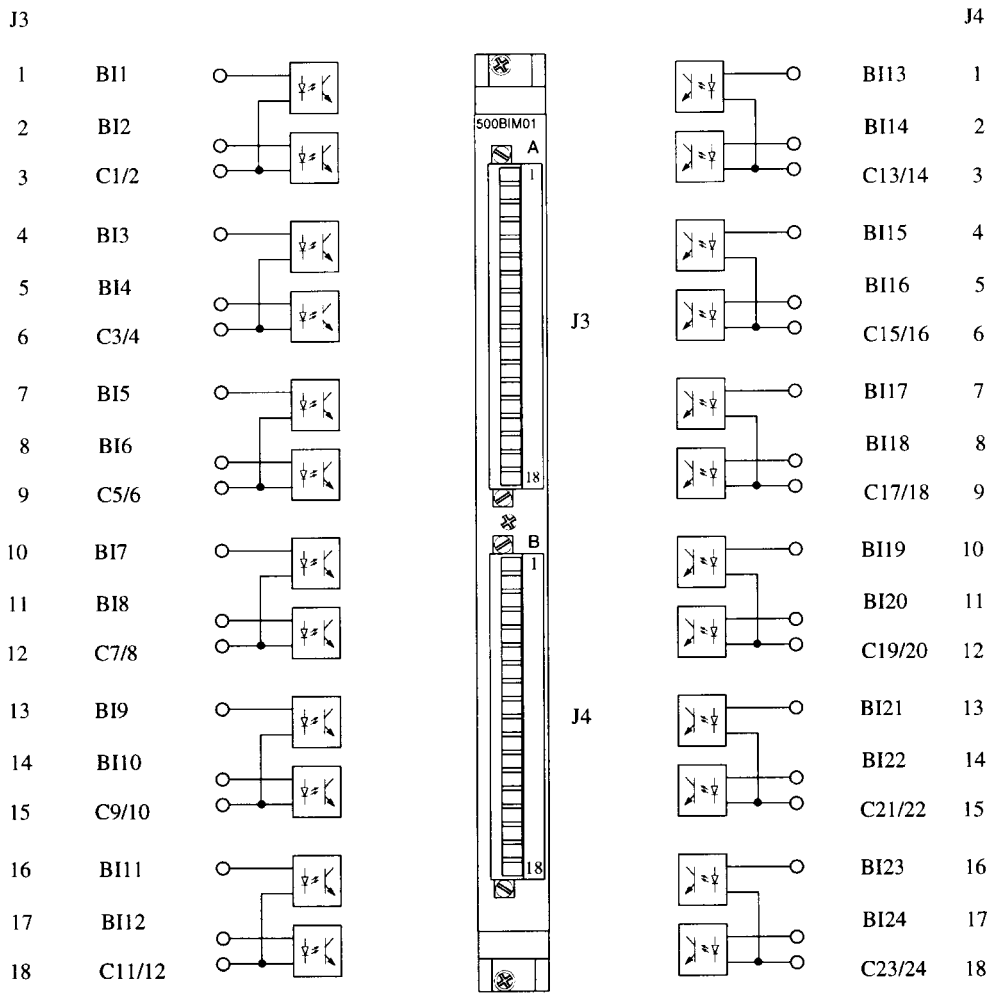

(98000110.tif)

Fig. 9 Terminal designation of the binary input unit 500BIM01

Technical data (cont'd)

Table 24: Binary output unit 500BOM01

22 binary switching outputs	- operating voltage - making current (0.5s) - continuous rating - Breaking current L/R = 40 ms	≤ 300 V AC/DC 30 A max. 8 A max. U < 50 V < 1.5 A U < 150 V < 0.3 A U < 250 V < 0.1 A
Consumption	- 11 relays activated: - 22 relays activated: - 11 relays activated + 6 trip coil superv.: - 22 relays activated + 6 trip coil superv.:	2.1 W 3.3 W 3.6 W 4.8 W

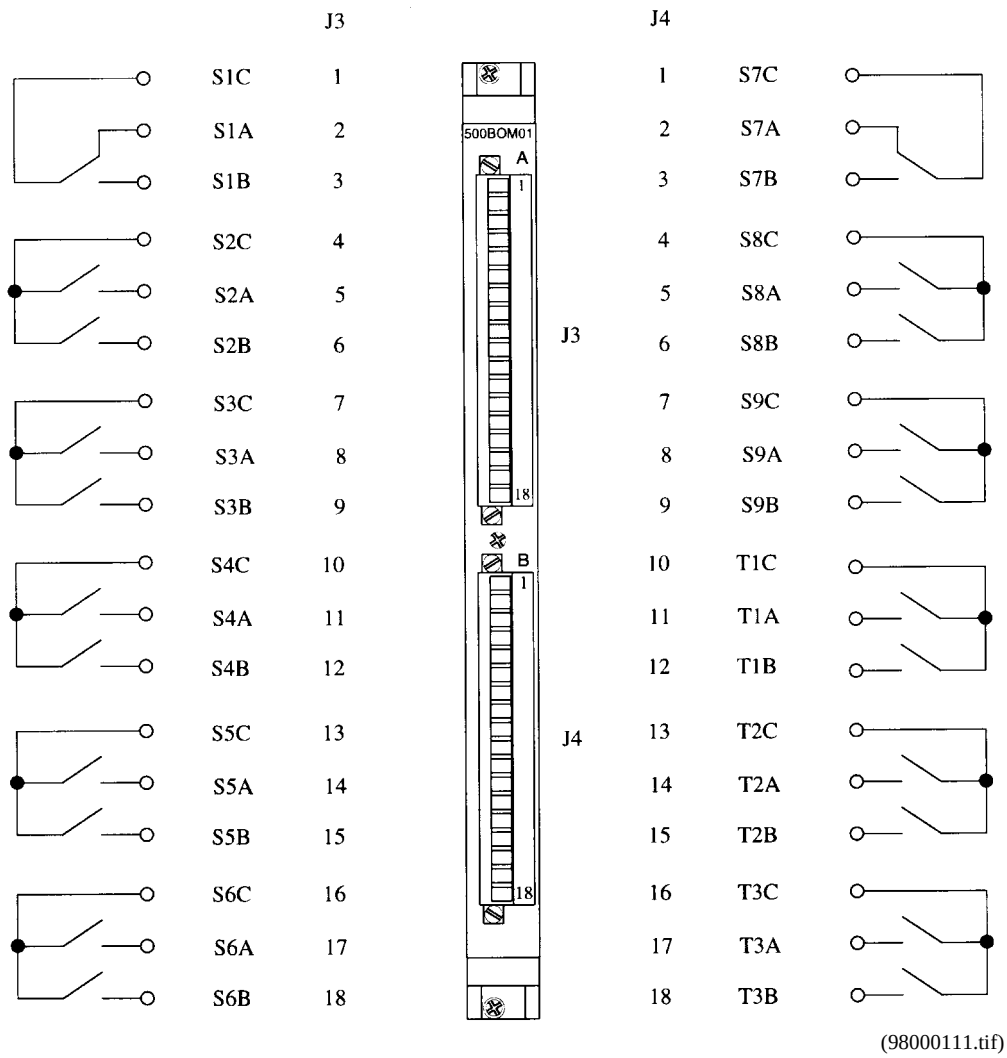

Fig. 10 Terminal designation of the binary output unit 500BOM01
S1A ... S9C standard contact outputs
T1A ... T3C contact outputs with trip coil supervision

Table 25: Casing with bus back plane

Consumption	Casing 500CR01 with small display Casing 500CR02 with large display	1.5 W 13 W

Diagrams

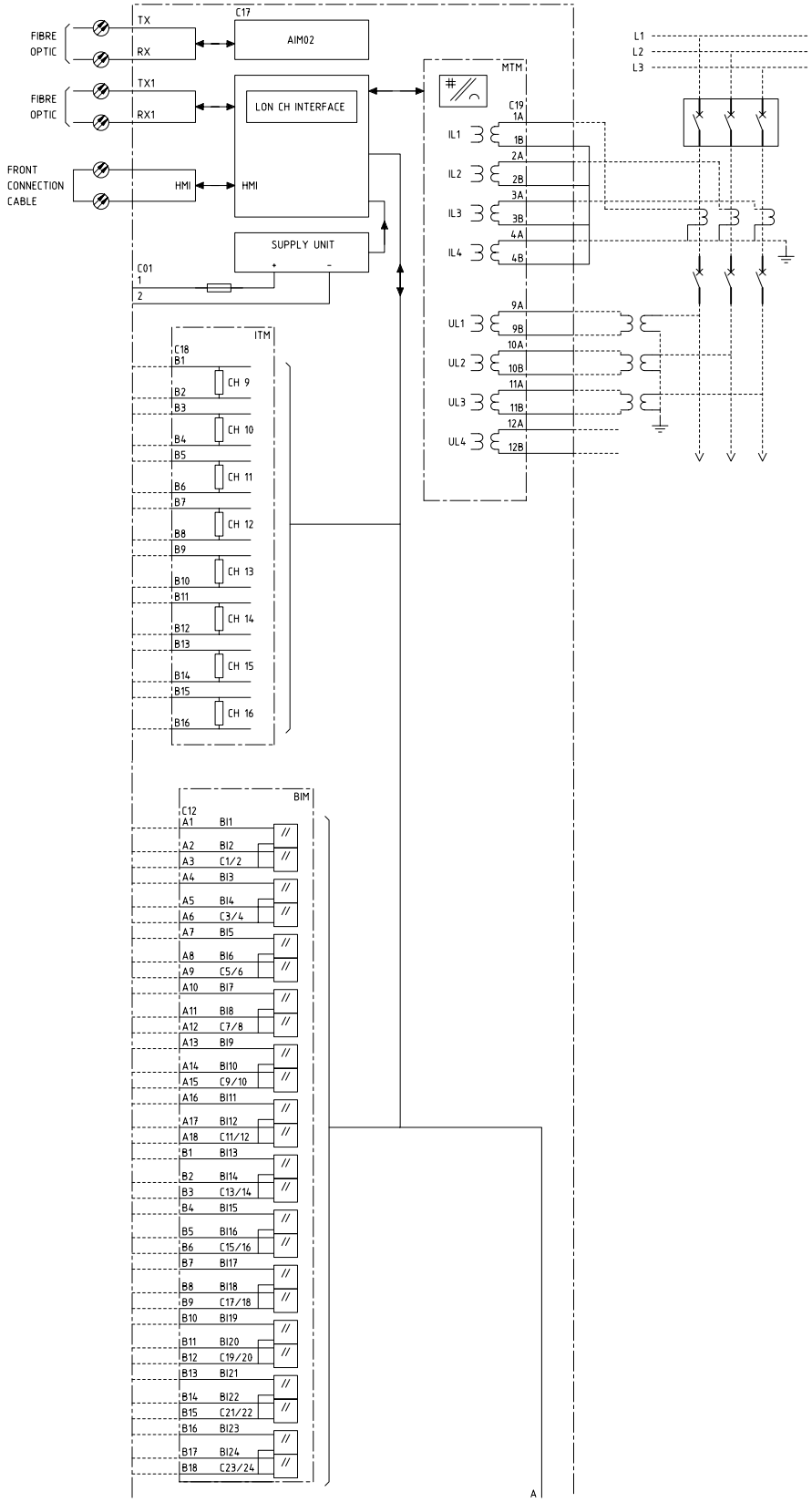
FIBRE OPTIC
TX
RX
C17
AIM02
FIBRE OPTIC
TX1
RX1
LON CH INTERFACE
FRONT CONNECTION CABLE
HMI
HMI
SUPPLY UNIT
C01
1
2
MTM
C19
IL1
IL2
IL3
IL4
UL1
UL2
UL3
UL4
L1
L2
L3
ITM
C18
CH 9
CH 10
CH 11
CH 12
CH 13
CH 14
CH 15
CH 16
BIM
C12
BI1
BI2
C1/2
BI3
BI4
C3/4
BI5
BI6
C5/6
BI7
BI8
C7/8
BI9
BI10
C9/10
BI11
BI12
C11/12
BI13
BI14
C13/14
BI15
BI16
C15/16
BI17
BI18
C17/18
BI19
BI20
C19/20
BI21
BI22
C21/22
BI23
BI24
C23/24
A

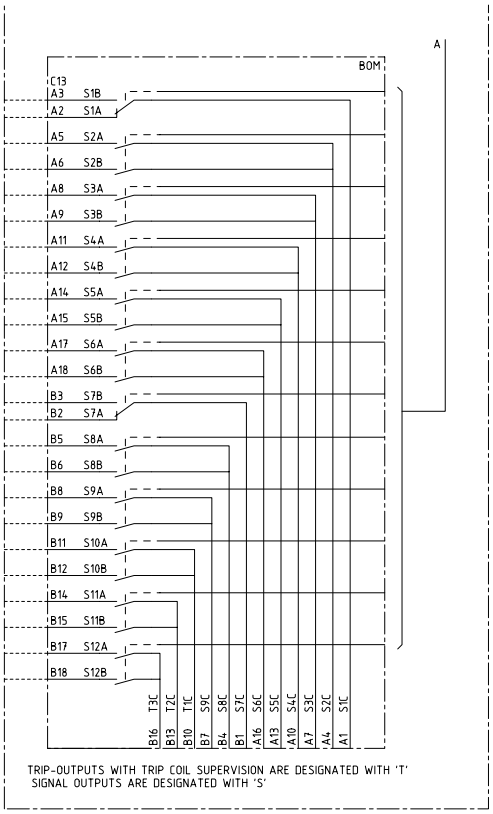

Fig. 11 Typical terminal diagram

Casing design

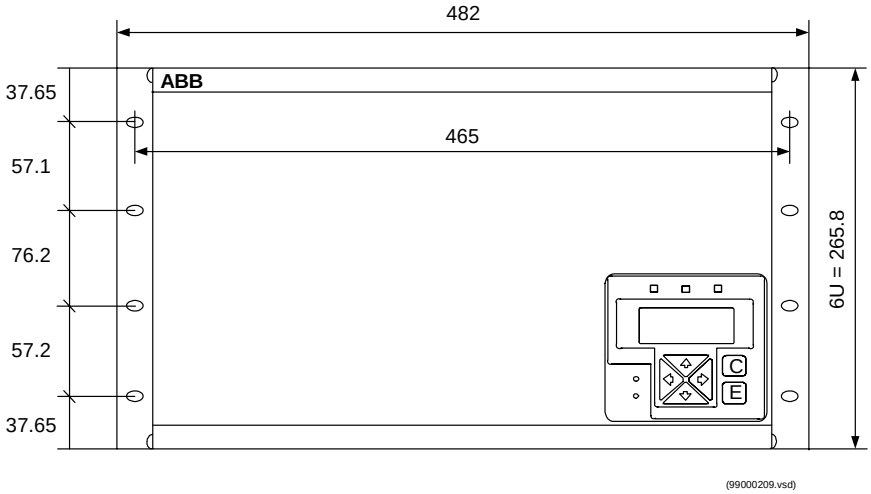

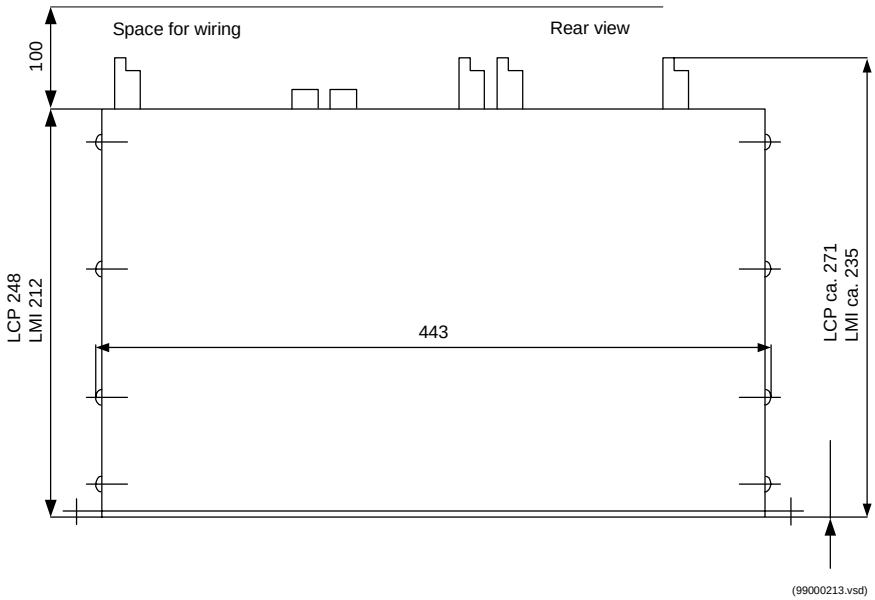

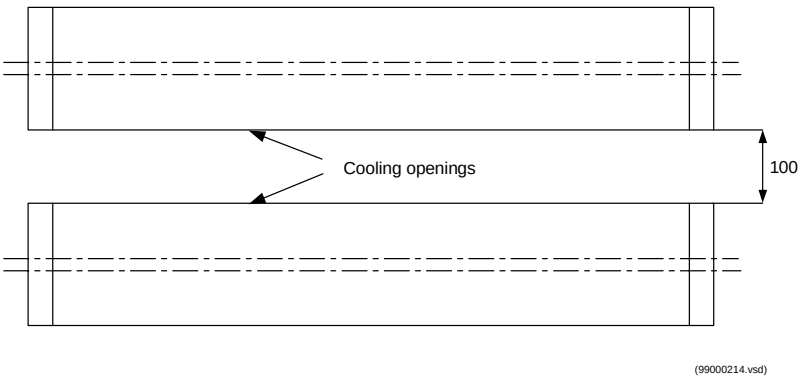

Fig. 12 Dimension drawings

Ordering

Orders should specify the layout of the bay control terminal including all optional modules according to the ordering form. The form can be required via your sales contact.

Sample specification

The tendered bay control terminal shall be a numerical control device for the automation of complex HV substations.

Its modular structure enables the bay control terminal to be adapted to the layout of the bay and the station.

The bay control terminal is modular with respect to the number of inputs and outputs, number of supply modules (redundancy), communication, number of processors and the functions performed. The latter are selected from a library of function blocks. Provision shall be made for connecting actuators and sensors via a fast process bus.

Events shall be time stamped with an accuracy of 1 ms in the bay control terminal. The time distribution shall be made via the station bus without any separate synchronization lines.

The bay control terminal shall be capable of executing essential functions with critical timing. The unit shall be part of an overall concept facilitating the integrated performance of control, regulation, protection and protocol conversion functions.

In comparison with industrial installations, the EMC requirements for HV switchyards are tougher and must be met.

References

Technical Reference Manual REC 580*3.0	1MRK 511 059-UEN
User’s Manual CAP 580*3.0	1MRK 511 067-UEN

Manufacturer

ABB Automation Products AB
Substation Automation Division
SE-721 59 Västerås
Sweden
Tel: +46 (0) 21 34 20 00
Fax: +46 (0) 21 14 69 18

1 General

The operation of a measuring function is influenced by distortion, and measures need to be taken in the terminal to handle this phenomenon. One source of distortion is current transformer saturation. In this terminal, measures are taken to allow for a certain amount of CT saturation with maintained correct operation. This terminal can allow relatively heavy current transformer saturation.

2 Voltage transformers

Use magnetic or capacitive voltage transformers. Capacitive voltage transformers (CTVs) should fulfil transient requirements according to IEC 186A, section 20.

According to the standard the secondary voltage should drop to less than 10% of the peak prefault value before the short circuit within one cycle at a primary voltage drop down to zero.

3 Current transformers

3.1 Classifications

Use current transformers of type TPX or TPY with an accuracy class of 5P or better. The characteristic of the linearised current transformer type TPZ is not well defined as far as the phase angle error is concerned. Contact ABB Automation Products AB to confirm that the type in question can be used.

Select the current transformer ratio so that the current magnitude is higher than the minimum operating value for all detectable faults. The minimum operating current is not lower than 5% of the nominal current.

4 Serial communication

4.1 LON

Connect the optical fiber LON communication link when the terminal should be used in a substation control system, SCS. Normally the communication link is connected to a LON star coupler. Use only glass fibers.

Table 1: Cable connection requirements for LON bus connection

Cable connector	ST-connector
Fiber diameter	62.5/125 µm
Max. cable length	1000 m

Use the SIGTOOL signal engineering tool or the LON network tool to configure the LON nodes in a substation control system.

4.2 MVB process bus

Connect the optical fiber MVB communication link when the terminal should be used together with serial process data interfaces, PISA. Normally the communication link is connected to a MVB star coupler. Use only glass fibers.

Table 2: Cable connection requirements for MVB bus connection

Cable connector	ST-connector
Fiber diameter	62.5/125 µm
Max. cable length	1000 m

Use the instructions in the PISA user’s guide and the CAP 580 User’s guide to configure the process bus.

4.3 Engineering and downloading PC

A suitable front connection cable for PC can be purchased from ABB Automation Products AB. See the REC 580 technical overview broschure for ordering details.

Minimum requirements for engineering using CAP 580 including Mwt and DDT:

- CPU Intel Pentium 160 MHz.
- S-VGA monitor.
- 96 MB RAM, 128 MB recommended.
- At least 100 MB hard disc space available.
- Microsoft Windows NT 4.0 (English), Service Pack 3.
- Object Store (database system) V5.1.
- Microsoft Excel97 and Access97, service release 1.

See also the CAP 580 User’s guide.

Minimum requirements for downloading the REC 580 base software:

- CPU Intel 386.
- DOS 5.0.
- 20 MB hard disc space.