Contents Page

Installation and commissioning 4–3
Installation 4–3
Introduction 4–3
Preparations 4–3
Receiving, unpacking and checking 4–3
Storage 4–3
Mechanical installation 4–3
Electrical installation 4–4
Connectors for CT circuits 4–4
VT and signal connectors 4–4
Unit grounding 4–5
Cubicle or rack grounding 4–6
Cubicle and gas insulated breaker grounding 4–7
Optical fiber installation 4–7
LON 4–7
MVB 4–7
Hardware settings 4–7
Generating setting and configuration values 4–8
Prepare the terminal for downloading 4–8
Download the database 4–8
Download the application 4–8
Commissioning 4–10
Overview 4–10
Preparations 4–10
Connection tests 4–10
CT and VT circuits 4–10
Auxiliary supply 4–10
Binary input circuits 4–11
Binary output circuits 4–11
Secondary injection testing 4–11
Basic logic 4–11
Additional configurable logic 4–11
Apparatus control 4–11
Interlocking 4–12
Transformer voltage control 4–12
Interbay communication 4–13
Autorecloser 4–13
General commissioning tests 4–13
Checking the dead times 4–13
Synchrocheck 4–15
Decommissioning 4–16
Transporting and storing of devices 4–16
Disposal 4–16
Local human-machine interface 4–17
Application 4–17
Theory of operation 4–18
The local machine interface 4–18

Status indicated by LEDs 4–19
LCD display 4–19
Navigation buttons 4–19
Cancel and Enter buttons 4–19
Menu navigation 4–20
Startup 4–20
Basic terminal information display 4–21
How to prepare the terminal for downloading 4–21
The local control panel 4–22
Theory of operation 4–22
Operation switch 4–23
Operator place switch¨ 4–23
Indicators 4–23
Testing the indicators 4–23
Navigation buttons 4–23
Accept and Select buttons 4–23
Display button 4–23
The Open and Close buttons 4–23
The electroluminicence display 4–24
The single line diagram 4–24
Service value bar display 4–25
How to operate a switch device 4–25
Displaying basic terminal information 4–25
Startup 4–26
How to prepare the terminal for downloading 4–27
The information pages 4–27
Navigating the information pages 4–28
LED designation page 4–28
Alarm page 4–29
Event page 4–30
Measurements page 4–31
The control menus 4–31
Navigating the control menus 4–32

1 Installation

1.1 Introduction

The mechanical and electrical environmental conditions at the installation site must be within permissible range according to the technical data of the terminal. Dusty, damp places, places liable to rapid temperature variations, powerful vibrations and shocks, surge voltages of high amplitude and fast rise time, strong induced magnetic fields or similar extreme conditions should be avioded.

Sufficient space must be available in front of and at rear of the terminal to allow access for maintenance and future modifications. Flush or semiflush mounted units should be mounted so that unit modules can be added and replaced without excessive demounting.

1.2 Preparations

1.2.1 Receiving, unpacking and checking

1. Remove the transport casing.

2. Visually inspect the terminal.

Check that all items are included in accordance with the delivery documents. Check for transport damages.

In case of transport damage appropriate action must be taken against the latest carrier and the nearest ABB office or representative should be informed. ABB should be notified immediately if there are any discrepancies in relation to the delivery documents.

1.2.2 Storage

Store the terminal in the original transport casing in a dry and dust free place. Observe the environmental requirements regarding storage stated in the technical data.

1.3 Mechanical installation

The terminal is built out of an industry standard 19" subrack assembly. Use standard components for cabinet mounting.

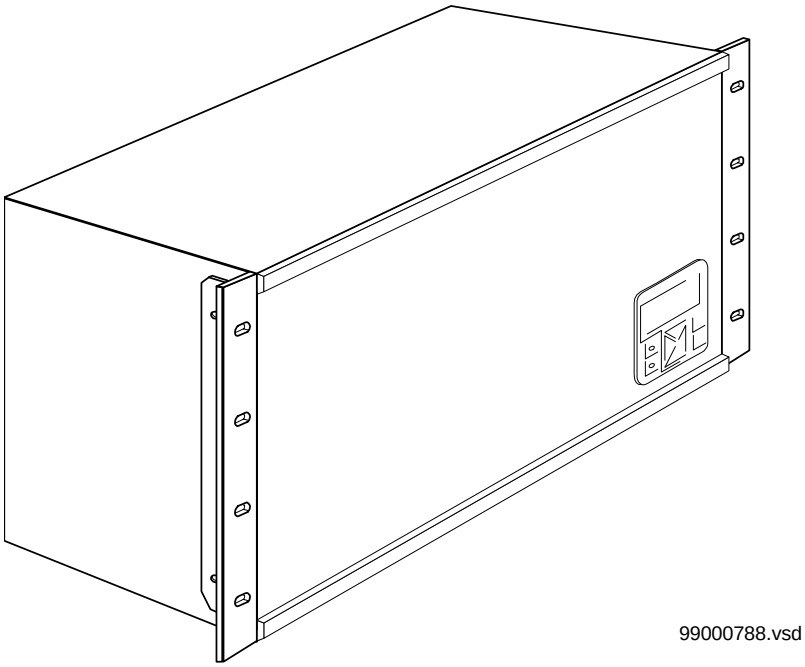

Figure 1: The REC 580 subrack assembly

1.4 Electrical installation

Always make shure established guidelines for this type of terminal is followed during installation. Lay out low signal wiring (binary and auxilliary signals) with adequate separation from CT and VT wiring to minimize interference.

Always use shielded cables for CT and VT wiring. Use shielded cables whenever possible for other types of signals. Always use 360° full shield cable bushings to enshure shield coupling.

1.4.1 Connectors for CT circuits

CTs are connected using board mounted screw connectors.

Use a solid conductor with a cross section area between 0.5-6 mm^2 (AWG20-10) or a stranded conductor with a cross section area between 0.5-4 mm^2. Use a ferrule with plastic collar to connect two conductors, cross section area between 0.5-1.5 mm^2 (AWG20-18).

1.4.2 VT and signal connectors

VTs and signals are connected using COMBICON (Phoenix technology) plug-in screw connectors.

Connect signals to the COMBICON plug. Then plug the connector into the corresponding board mounted receptable. Lock the plug to the receplable by fastening the lock screws.

Use a solid or stranded conductor with a cross section area between 0.2-2.5 mm^2 (AWG24-12). Use a ferrule with plastic collar to connect two conductors, cross section area between 0.5-1.5 mm^2 (AWG20-18).

1.4.3 Unit grounding

Connect a tinned copper braid strip, at least 20 mm wide, between one of the grounding points located at the sides of the unit and the closest grounding point.

All contact surfaces must be noncorroding and good electrical conductors. Do not paint or coat contact surfaces with nonconducting coatings. Only ground the unit in one single point. A copper plated aluminium disc must be inserted between aluminium and copper surfaces to prevent corrosion.

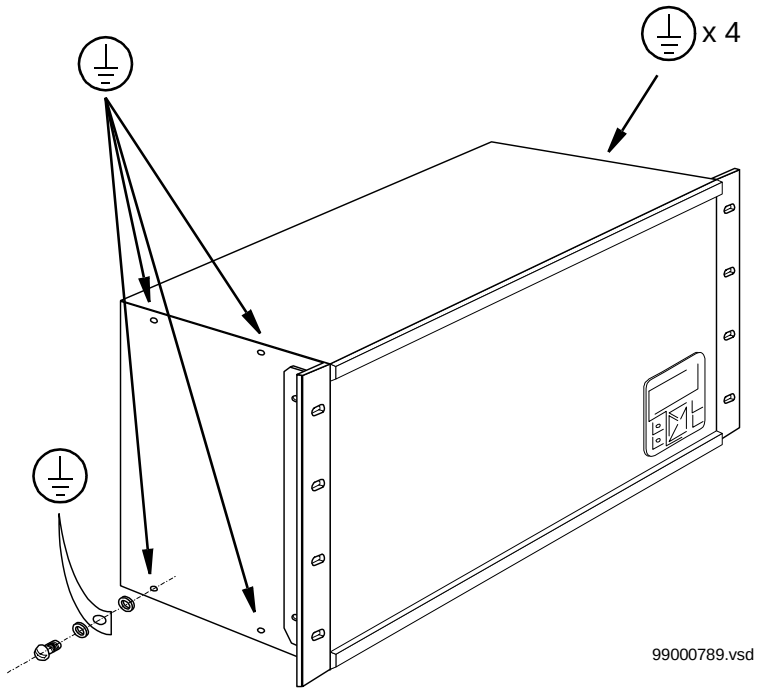

Figure 2: Grounding points

1.4.4 Cubicle or rack grounding

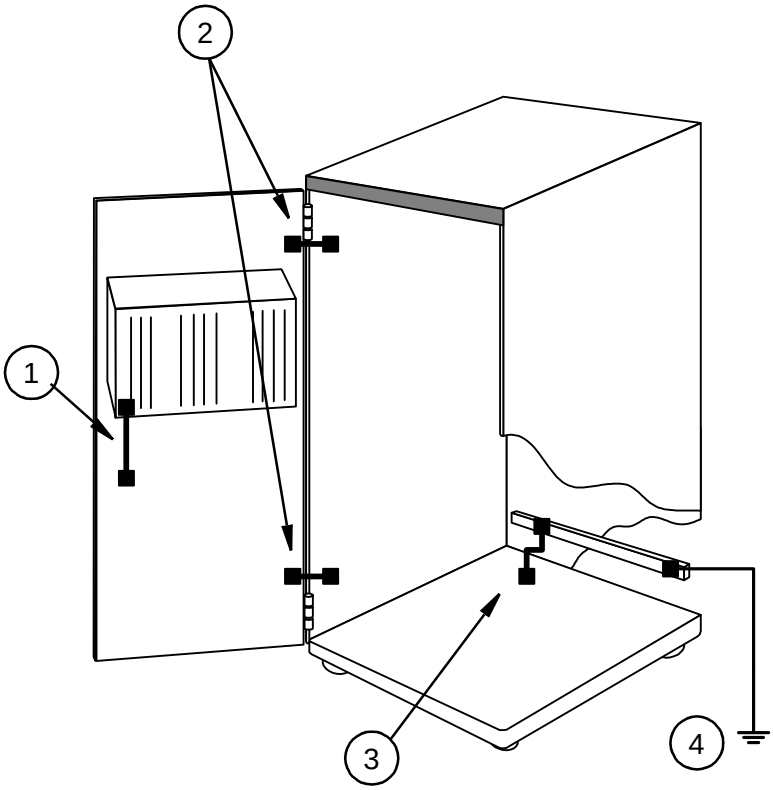

99000792.vsd

Connect the terminal's ground point to the cubible hinged frame or chassis door (1). Make shure the hinged frame or door is connected to the cubicle frame (2). Make shure the cubicle is connected to the cubicle ground rail (3). Make shure the ground bar is connected to system ground (4).

Use the same method to connect and ground a unit mounted in an open rack or electronics cabinet.

Use braided copper strips, at least 20 mm wide, as short as possible. To prevent corrosion, use copper plated aluminium discs between aluminium and copper parts.

1.4.5 Cubicle and gas insulated breaker grounding

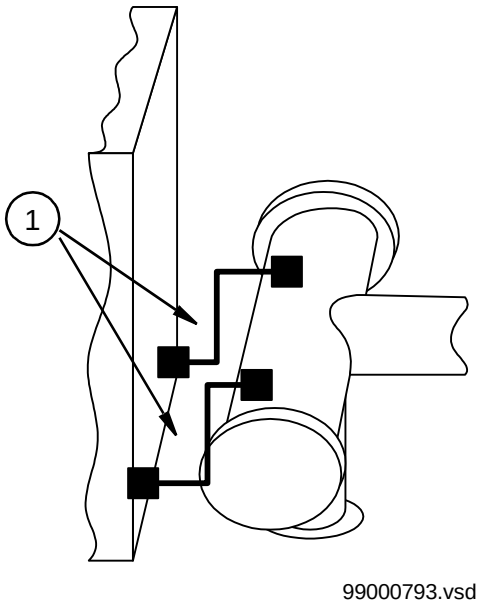

Figure 3: Gas insulated breaker grounding

Make shure the cubicle and breaker are connected (1) with flexible copper bars with a cross-section of at least 16 mm and 20 mm minimum width.

1.5 Optical fiber installation

Optical fiber cables are sensitive to handling. Do not bend too sharply. The minimum curvature radius is 25 cm for glass fibers. If cable straps are used, apply with loose fit.

Always hold the connector, **never** the cable, when connecting or disconnecting. Do not twist, pull or bend the optical fiber.

1.5.1 LON

Connect the optical fiber LON bus to the central processing module ports Tx1 and Rx1. Use only glass fibers.

Connectors are color coded; connect blue or dark grey cable connectors to blue or dark grey (recieve) board connectors. Connect black or grey cable connectors to black or grey (transmit) board connectors.

1.5.2 MVB

Connect the optical fiber MVB bus to the appropriate input module, ports Tx and Rx.

Connectors are color coded; connect blue or dark grey cable connectors to blue or dark grey (recieve) board connectors. Connect black or grey cable connectors to black or grey (transmit) board connectors.

1.6 Hardware settings

Make sure all hardware settings (jumpers, soft configurations etc) are made according to the delivery and project specifications.

2 Generating setting and configuration values

Download the configuration and setting data to the REC580 by using:

1. DDT to download the database from CAP 580.
2. MULTIPROG wt to download the application.

2.1 Prepare the terminal for downloading

1. Reset the terminal.

2. Wait for status message.

Wait for the message “Press C for limited ready” to be displayed.

3. Press the Cancel button.

4. Press the Enter button.

Complete these two steps within 10 seconds to enter setup mode. Wait for the message “System now in limited ready mode” to be displayed.

2.2 Download the database

1. Start DDT.

2. Select database.

Click **Open** in the **File** menu. Select the appropriate database in the displayed dialog.

3. Check the connection.

On the **Tools** menu click **Check connection**. Wait for the message "The connection has been successfully established" to be displayed.

4. Download the database.

On the **Database** menu point to **Download**, then click **Start download**. If necessary edit the database notes. Click **Update** to download the database. Wait for the message “The database has been successfully downloaded” to be displayed.

5. Restart the terminal.

If the terminal is equipped with the LCP, check the database filename during restart.

2.3 Download the application

1. Start CAP 580.

2. Select database.

Click **Open** in the **File** menu. Select the appropriate database in the displayed dialog.

3. Start MULTIPROG wt.

In the IEC1131 window, right-click the tree view object “IEC1131 Project”. In the displayed menu, point to **Mwt Options**, them click **Edit Mwt**.

4. Open the Resource control dialog.

On the **On-line** menu, click **Resource control**.

5. Stop and delete any running application.

Click **Stop**. If the application should be stored in nonvolatile memory, click **Delete Bootproject** to remove the current application.

6. Download the application.

Click **Download**. In the displayed dialog click **Bootproject** if the program should be stored in nonvolatile memory or **Entire Project** if the program should be stored in RAM. Wait for the download to complete.

Note: A program stored in RAM will be lost when restarting the terminal.

7. Start the application.

If **Boot Project** was selected during download, restart the terminal. Else click **Download**. In the displayed dialog click **Cold** to start the application.

3 Commissioning

3.1 Overview

Perform the commissioning tests to:

- Verify that all functions is operating as expected.
- Verify the installation.
- Verify cooperation of terminal, transducers and switch devices.

Always document the commissioning for future reference.

3.2 Preparations

Check that all necessary test equipment, documentation and software are available. This includes:

- Valid wiring diagrams.
- Setting lists.
- CAP 580, MULTIPROG wt and DDT.
- Configuration database and application.

3.2.1 Connection tests

3.2.2 CT and VT circuits

Check that the wiring is in strict accordance with the supplied wiring diagram. Do not continue further until any errors are corrected.

Test the circuitry. The following tests are recommended:

- Polarity check.
- CT circuit current measurement (primary injection test).
- Grounding check.
- Insulation test.

The polarity check verifies the integrity of the circuits and the phase relationship. The check should be performed as close as possible to the terminal

The primary injection test verifies the CT ratio and the wiring all the way through from the primary system to the terminal. Injection must be performed for each phase-to-neutral circuit and each phase-to-phase pair. In each case currents in all phases and the neutral line are measured.

3.2.3 Auxiliary supply

The value of the auxiliary supply voltage must remain within the permissible range under all operating conditions and the polarity must be correct (see Technical Data for the particular power supply unit).

3.2.4 Binary input circuits

If necessary, disconnect the binary input connector from the binary input cards. Check all connected signals so that both input level and polarity are in accordance with the terminal's specifications.

3.2.5 Binary output circuits

If necessary, disconnect the binary output connector from the binary output cards. Check all connected signals so that both load and polarity are in accordance with the terminal's specifications.

3.3 Secondary injection testing

3.3.1 Basic logic

Test each basic logic function block separately. Connect all:

- function block input signals to corresponding binary inputs.
- function block output signals to corresponding binary output signals.

Ground (logic zero) and/or apply a rated DC voltage (logic one) in suitable combinations to the connected binary inputs and monitor the connected binary outputs. Verify the resulting logic output signal against the expected combinatory result according to the logic function block type.

3.3.2 Additional configurable logic

The additional configurable logic consists of a number of function blocks which are connected in a delivery-specific way. For that reason, the total function should be tested in a system, that is, either in a complete delivery system as an acceptance test (FAT/SAT) or as parts of that system.

3.3.3 Apparatus control

The apparatus control function consists of a number of function blocks which are connected in a delivery-specific way to ensure communication between bays and to the station level. For that reason, the total function should be tested in a system, that is, either in a complete delivery system as an acceptance test (FAT/SAT) or as parts of that system.

The system should contain:

- Station HMI (MicroSCADA including LIB580)
- or/and Gateway connected to a Control Centre (simulated)
- Control terminals REC 580 (more than one for the reservation tests)
- Equipment to simulate high voltage apparatuses for a bay
- Configuration tool CAP 580

The tests to be performed should be:

- Operator place selection

- Open and close commands
- Cancelling of selections
- Overriding of interlocking and/or synchro-check
- Block and deblock of operation (per apparatus or bay)
- Block and deblock of the position indication updating
- Manual setting of the position indication

The tests should be performed from station HMI, simulated control centre working place and local panel (if applicable).

3.3.4 Interlocking

The interlocking function consists of a bay-level part and a station-level part. The interlocking is delivery specific and is realised by bay-to-bay communication over the station bus. For that reason, test the function in a system, that is, either in a complete delivery system as an acceptance test (FAT/SAT) or as parts of that system.

The system should contain:

- Station HMI (MicroSCADA including LIB580)
- Control terminals REC 580 (All terminals involved in the interlocking function)
- Configuration tool CAP 580

The tests to be performed should be:

- Open and close commands for all included breakers, disconnectors and earthing switches according to the rules defined by the user for different operational modes of the substation.

The tests should be performed from station HMI or from local panel (if applicable).

3.3.5 Transformer voltage control

The transformer voltage control function consists of a number of function blocks, which are connected in a delivery-specific way, depending on the amount of parallel transformers. For that reason, the total function should be tested in a system, that is, either in a complete delivery system as an acceptance test (FAT/SAT) or as parts of that system.

The CAP 580 configuration tool can be used for testing. For single mode of operation, different shapes and levels of the controlled voltage can be applied to the U_MEAS_VALUE input, and the type of control action and the time to control action can be observed, as well as blocking functions, etc.

For the parallel mode of operation also the U_ADDITIONAL input of the control function has to be activated with relevant values from the CAP-tool.

3.3.6 Interbay communication

The interbay communication function must be configured in a delivery-specific manner. The function can be verified indirectly by testing the bay coordination in a delivery system, preferably during factory or site acceptance test.

3.3.7 Autorecloser

3.3.7.1 General commissioning tests

When commissioning the autorecloser function, the proper combined operation of protection, autorecloser and synchrocheck functions together with circuit-breaker must be verified. Also, the resulting dead times must be determined.

3.3.7.2 Checking the dead times

Since the dead time settings do not correspond to the effective total dead times, especially in a scheme with two circuit-breakers (see figure 4), the period during which the circuit-breaker is actually open must be measured. This entails adjusting the dead time until the measured breaker time minus arcing and pre-ignition times and the inevitable CB tolerances result in an adequate composite dead time.

Providing the circuit-breakers at both ends of the line are of the same type and thus permit the same tolerances to be assumed at both ends, the same dead time t_p can be set in the two terminal stations. Where this is not the case, the tripping and closing times of the two circuit-breakers must also be measured in addition to the dead times. The dead times set for the two autorecloser functions must then ensure that a sufficiently long “overlapping” dead time exists to enable the circuit-breakers to de-ionize.

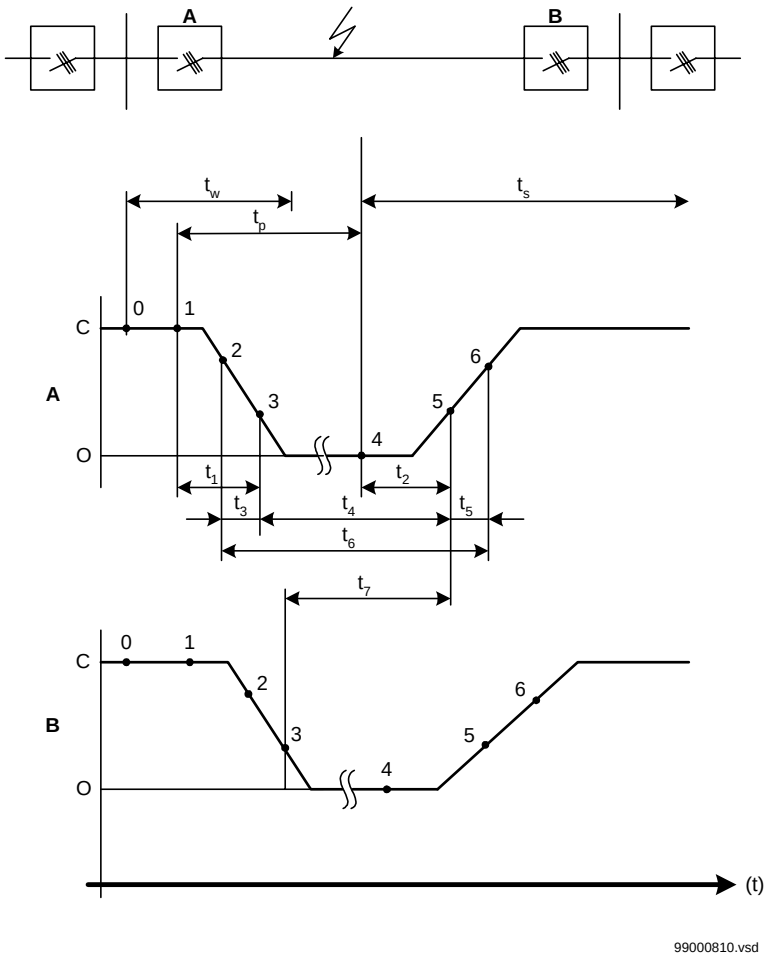

A: circuit-breaker 1	B: Circuit-breaker 2
C: closed position	O: open position
0: start	1: Trip signal
2: contacts part	3: current interrupted
4: Close signal	5: current flows again
6: contacts make	
t_1: tripping time	t_2: re-closing time
t_3: arc extinction time	
t_4: dead time	t_5: pre-ignition time
t_6: duration of interruption	
t_7: resulting dead time	
t_p: dead time	t_s: inhibit time
t_w: fault duration	

Source: "Guidelines for auto-reclosure in electrical power systems" published by the German Association of Power Utilities VDEW

Figure 4: Resulting composite dead time

3.3.8 Synchrocheck

When commissioning the autorecloser function, the proper combined operation of protection function, autorecloser function, synchrocheck function and circuit-breaker must be verified.

4 Decommissioning

4.1 Transporting and storing of devices

Store and transport the terminal in the original transport casing in a dry and dust free place. Observe the environmental requirements for storage stated in the technical data.

4.2 Disposal

Dispose the terminal according to the current environmental regulations regarding recycling and disposal of electronic materials.

1 Application

Use the local human machine interface (HMI) to

- change function settings.
- check service values.
- check switch devices position.
- monitor terminal status.

Connect a PC to the HMI to extend the machine interface functionality and to download configurations and applications. The terminal is equipped with either a simple LCD-based HMI, the *local machine interface*, LMI, or the more advanced *local control panel*, LCP equipped with a 10" electroluminicence display. The LCP extends the HMI functionality, mainly to control and monitor switch devices from a single line schematic.

2 Theory of operation

2.1 The local machine interface

Use the local machine interface (LMI) to operate the terminal locally with limited functionality. To achieve full functionality as well as the possibilty to operate switch devices, the local control panel is needed.

The four line LCD displays menus and commands, resulting values and status information. Use the buttons to display menus and values. The terminal's status is indicated by the LEDs above the LCD.

Use the optical connector on the left to connect a PC for additional functionality, such as downloading configurations.

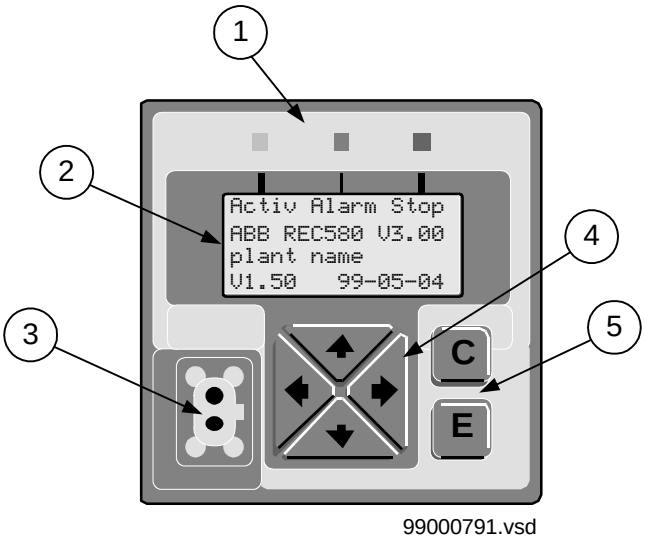

Figure 1: The local machine interface front panel

Table 1: Front panel items

Pos	Description
1	Status indication LEDs
2	LCD display
3	Optical connector
4	Navigation buttons
5	**Enter** and **Cancel** buttons

The usage of status indications, buttons and the contents of the LCD display are fully configurable and will differ from application to application.

2.1.1 Status indicated by LEDs

The terminal's status is indicated by the LEDs above the LCD. The three colors should be used to indicate correct operation (green), warnings or attention (yellow) and errors (red). The following table describes some often occuring ways of using the status LEDs.

Table 2: Common status LED usage

Display	Means
Off (No LED is lit)	No power or defect terminal.
Flashing green, yellow and red LED	Startup is in progress.
Steady green LED	The terminal is ready for operation and the application software is active.
Flashing green LED	An internal error is detected within the terminal. You can block a terminal or operate with reduced functionality, depending on the type of error and the internal configuration.
Steady yellow LED	A system alarm active. An event has occurred.
Steady red LED	A trip has occured.

2.1.2 LCD display

The four line LCD displays menus and commands, resulting values and status information. Press any button to activate the backlight. Without activity (no buttons pressed) the backlight is turned off after approximately ten minutes. Pressing a button to activate the backlight does not delete events or affect the current settings.

2.1.3 Navigation buttons

Press the left or right arrow buttons to:

- position the cursor in a horizontal direction, for instance, to move between the digits when setting a value.
- move between the data windows within the same menu branch.

Press the up or down arrow button to:

- move between menus.
- scroll a menu that contains more commands than displayed.
- change a setting parameter value.

2.1.4 Cancel and Enter buttons

Press the **Cancel** button, C to:

- cancel the selected command (in a menu or dialog).
- exit the displayed menu.
- clear LED status indication (event occured).

Press the **Enter** button, **E** to:

- execute the selected command (in a menu or dialog).
- confirm settings.

2.2 Menu navigation

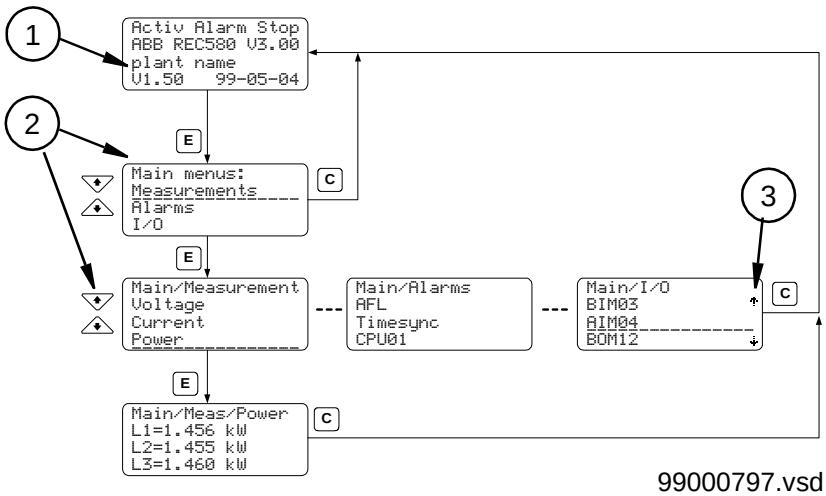

Figure 2: Principal menu structure

When the basic terminal information is displayed (1), press the Enter button to display the main menu.

Use the ⬇ or ⬆ button to select menus (2). The menu name will be underlined. Then press the **Enter** button to display the selected menu.

If the menu contains more items than can be displayed the overflow symbols will be displayed (3).

Pressing the **Cancel** button always returns to the basic terminal information display.

2.2.1 Startup

During startup several messages concering the progress will be displayed:

Table 3:

Message	Meaning
Starting XXX	Subsystem XXX is started (The configuration data is loaded)

Table 3:

Message	Meaning
Waiting for startup of proc.	The CPU module waits until the process-bus administrator (500MBA02) has started
Setting ready XXX	Subsystem XXX is set to ready
Waiting for I/O-module ..... being started	The CPU module waits until the process-bus devices have been started

2.2.2 Basic terminal information display

The basic terminal information display shows:

- the function (what is indicated) of the status LEDs.
- the terminal version number.
- the switchgear bay controlled by the terminal.
- the platform version number.
- today's date.

Press the **Enter** button to display the main menu.

```
Activ Alarm Stop
ABB REC580 V3.00
plant name
V1.50   99-05-04
```

99000790.vsd

Figure 3: Basic terminal information display example

2.3 How to prepare the terminal for downloading

To prepare the terminal for downloading, restart the terminal.

When requested, press the **Cancel** button within 10 seconds. The terminal is now in the restricted startup mode, ready for accepting the download of settings and applications.

3 The local control panel

Use the local control panel (LCP) to do local control of the bay via the REC580. It is also possible to display process and system status information.

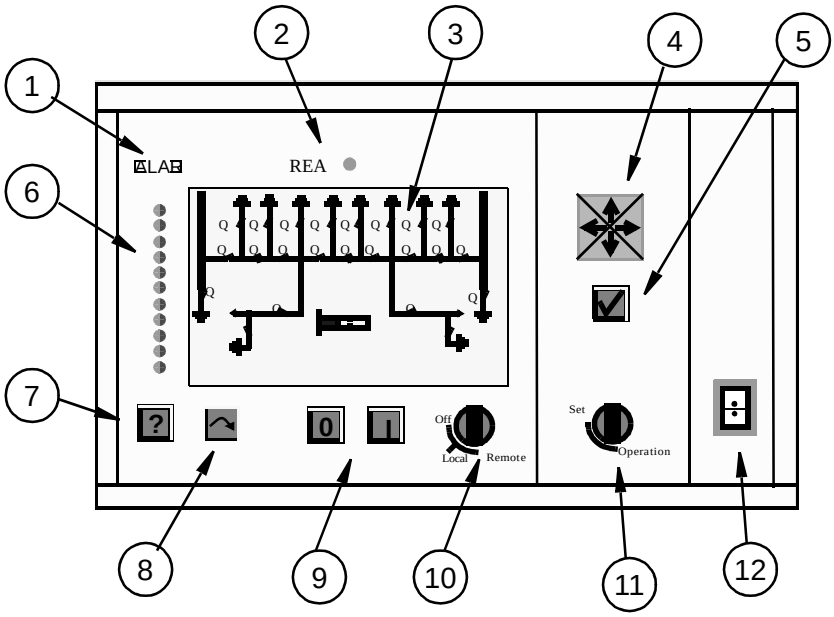

Figure 4: Local control panel front plate

Table 4:

Pos	Description
1	General alarm indicator (red)
2	Standby indicator (green)
3	Plasma display
4	Navigation buttons
5	**Accept** button
6	Alarm and status indication LEDs (green/red)
7	**Display** button
8	**Select** button
9	**Open** and **Close** buttons
10	Operator place switch
11	Operation switch
12	Optical connector

3.1 Theory of operation

3.1.1 Operation switch

Use the Operation switch to select the terminal's operation mode. Put the switch in the SET position to activate the LCP display menu system. Navigate the menus to set and change system parameters and counters, binary inputs and outputs. Put the switch in the OPERATION position to exit the menu system and return to the display of the single line diagram.

3.1.2 Operator place switch¨

Use the Operator place switch to set the operator place. Put the switch in the OFF position to prevent all switchgear control from the terminal. Put the switch in LOCAL position to operate switch devices. Put the switch in REMOTE position to transfer control authority to station control.

3.1.3 Indicators

See figure 1. The Standby indicator (2) indicates the general terminal state. The indicator will be lit when the terminal is executing the application software. The indicator will flash if a general internal problem (hardware defect etc) is detected.

The General alarm indicator (1) will be lit whenever an alarm is generated by the application.

The eleven dual color LEDs (6) can be freely configured when building the application to indicate alarms or signal status.

3.1.4 Testing the indicators

Make sure the Operation mode switch is in the OPERATION position. Press and hold the **Display** and **Select** buttons simultaneously. All indicators will be lit.

3.1.5 Navigation buttons

Use the navigation buttons to navigate and scroll through information pages and control menus.

3.1.6 Accept and Select buttons

Use the **Select** button, to select objects and parameters to change or operate. Use the **Accept** button, to confirm made changes and operations.

3.1.7 Display button

Use the **Display** button, ? to display the **Alarms** information page whenever alarms are indicated by the **General alarm** indicatior or the alarm LEDs. The **Alarms** information page will display alarm details.

3.1.8 The Open and Close buttons

Use the **Open**, O and **Close,** I buttons to operate switch devices.

3.1.9 The electroluminicence display

The 10” electroluminicence display displays menus and commands, resulting values and status information. The display will show:

- A single-line diagram of the bay with facility for controlling the switchgear represented in the diagram.
- Information pages; alarms, signals and measurements status, assignment of signals that triggers the activation of alarm LEDs.
- Control menus to set and change system parameters and counters, binary inputs and outputs.

All information pages and menus are freely configurable and will differ from application to application.

3.2 The single line diagram

The LCP normally displays a single line diagram.

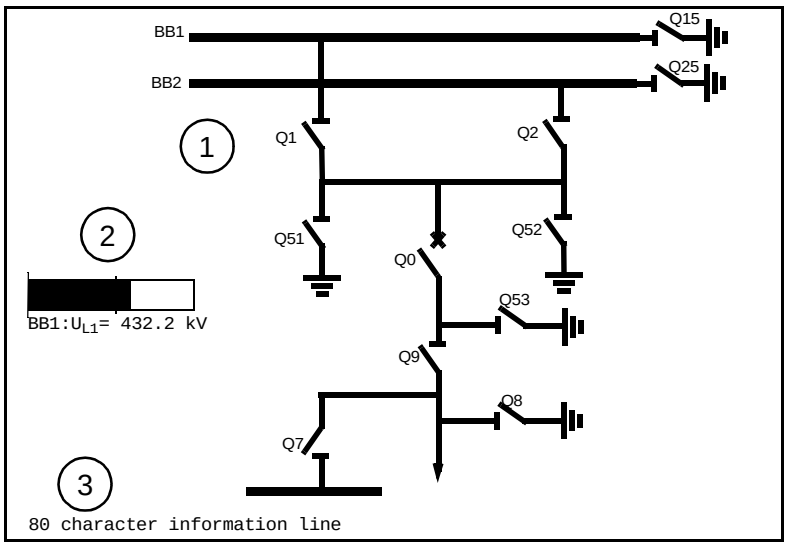

Figure 5: The single line diagram (example)

Although the display may differ from application to application, the following objects are normally used:

Table 5:

Pos	Description
1	The graphical single line diagram using standard graphic symbols for switch devices, lines and connections. It is also possible to display measurement values.
2	Service value bar display
3	Information text area

The information text area can display up to 80 characters and is normally used for status signals.

3.2.1 Service value bar display

The service value bar can display voltage, current, frequency or power service values. The bar is setup (service value level corresponding to 100%) during configuration. Below the bar the numerical service value is displayed. Use the **Up** and **Down** arrow buttons to scroll through the available measurements.

3.2.2 How to operate a switch device

Put the Operator place switch in LOCAL to operate devices from the LCP.

Cycle through the available switch devices by pressing the **Select** button. A marker will be displayed by the currently selected device. Press **Open** or **Close** to operate the device.

Use the dual-step operation procedure to operate switch devices with interlocking. Cycle through the available switch devices by pressing the **Select** button. A marker will be displayed by the currently selected device. Press the **Accept** button to display the interlocking alternatives, if any. Press **Open** or **Close** to operate the device.

3.3 Displaying basic terminal information

Set the operation mode switch to SET. Press and hold the **Display** button. The basic terminal information display shows:

- the terminal version number.
- the switchgear bay controlled by the terminal.
- the platform version number.
- today’s date.

3.3.1 Startup

During startup several messages concerning the progress will be displayed. To perform a normal startup, do not press the **Display** button.

```
Starting REC580
Press '?' to enter limited ready state!
```

```
Starting base software
Subsystem MPL
State Initializing
```

```
Waiting for the process bus devices
(BIO, AIP, DSC)
Login Procedure
Device Existing or Initialized
```

99000828.vsd

Figure 6: Startup messages

3.4 How to prepare the terminal for downloading

To prepare the terminal for downloading, restart the terminal. Wait for the following to be displayed:

```
C A U T I O N !
Do you really want to startup in the state
limited ready to load a new database?
Press the Enter key to confirm
```

99000829.vsd

Figure 7: Limited ready startup mode selection

Press the **Display** button within 10 seconds. The following message is displayed:

```
System now in state limited ready!
You can download a new database now.
```

99000830.vsd

Figure 8: Download OK message

The terminal is now in the restricted startup mode, ready for accepting the download of settings and applications.

3.5 The information pages

Use the information pages to view LEDs, alarms, signals and measurements in detail. An information page is divided into two parts, the main area (top) and the help area (bottom). View the help area to find helpful information about how to navigate through the information displayed in the main area, how to perform operation such as clearing alarms etc. The information pages can be:

- The **LED designation** page.
- The **Alarm** page.
- The **Event** page.
- The **Measurement** page.

3.5.1 Navigating the information pages

From the single line diagram, press and hold the **Display** button to display the **LED designation** page. To return to the single line diagram, release the **Display** button.

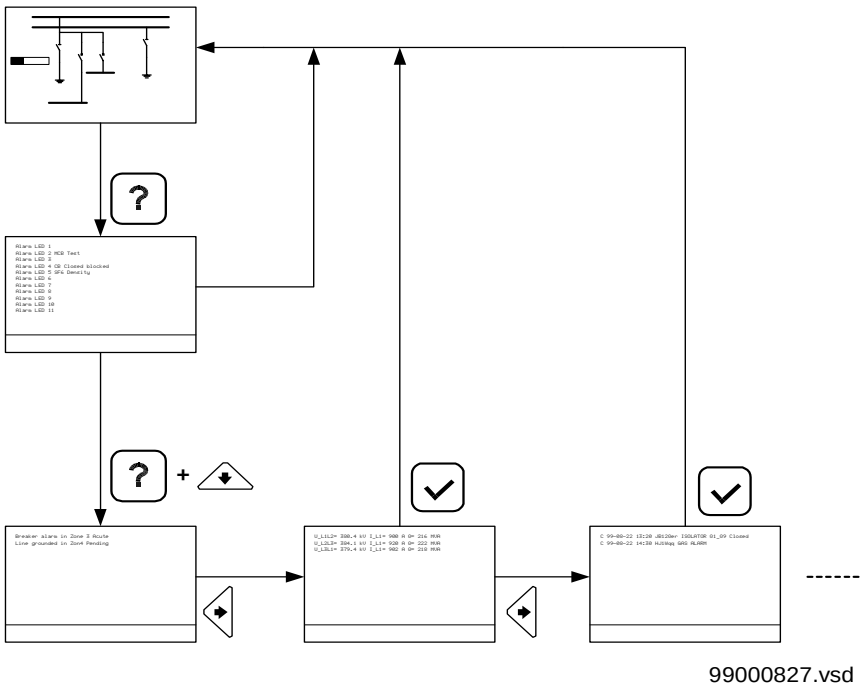

Figure 9: Information pages navigation

To display the next page (normally the **Alarm** page), press and hold the **Display** button. Then press the **Down** arrow button. Release the **Display** button. Use the **Right** arrow button to display other pages as the figure displays. To return to the single line diagram press the **Accept** button

3.5.2 LED designation page

View the **LED designation** page to see which alarm event is connected to which LED. The displayed texts are defined at configuration.

To return to the single line diagram, release the **Display** button. To clear active alarms press the **Accept** button while holding the **Display** button. Clearing will turn off the General alarm indicatior and the lit LED(s).

```
Alarm LED 1
Alarm LED 2 MCB Tripped
Alarm LED 3 CB Close Blocked
Alarm LED 4 CB Hydraulic Pump Fault
Alarm LED 5 CB Trip Blocked
Alarm LED 6 CB Protection Trip
Alarm LED 7 SF6 Density
Alarm LED 8
Alarm LED 9 Switch Error
Alarm LED 10 Transformer state                    (or other station/bay signals)
Alarm LED 11 Protection Failed



Next page: ? and downwards arrow button
Reset alarms: ? and accept button
```

Figure 10: LED designation page (example)

3.5.3 Alarm page

View the **Alarm** page to monitor active alarms. The page is refreshed during display if new alarm events occur. If more alarms are active than displayed, arrows appear on the first and last lines of the main area. Use the **Up** and **Down** arrow button to scroll alarms.

```
Type     Date       Time          Signal Text     Event Text

C        03/04/98   11:55:03:345  E01SF6_AL       Gas Alarm Stage 1   coming
C        03/04/98   11:55:03:123  E01SF6_AL       Gas Alarm Stage 1   going

Scroll page: Upwards or downwards arrow button
Next page: Right arrow button
Quit page: Accept button
```

Figure 11: Alarm page (example)

3.5.4 Event page

View the **Event** page to get detailed information about events of the REC580.

Type	Date	Time	Signal text	Event text
C	96-03-04	11:32:12.123	JB17Q1Q9	ISOLATOR Q1_Q9 CLOSED
C	96-03-04	11:33:13.123	JA26_AL	GAS ALARM 1.STEP
C	96-03-04	11:40:12.233	JB17_Q8	EARTH SWITCH Q8 CLOSED

Scroll between pages: Upwards or downwards arrow button
Next page: Right or left arrow button
Quitt page: Accept button

Figure 12: Event page (example)

3.5.5 Measurements page

View the **Measurements** page to get a list of measurands in text form.

Voltage:	Current:	Power:		
			cos phi = 0,85	cos phi = 0,85
		apparent	real	reactive
U_L1L2 = 380 kV	I_L1 = 960 A	S = 210,6 MVA	P = 179 MV	Q = 110,9 Mvar
U_L2L3 = 380 kV	I_L2 = 870 A	S = 191 MVA	P = 162,4 MV	Q = 100,6 Mvar
U_L3L1 = 380 kV	I_L3 = 911 A	S = 200 MVA	P = 170 MV	Q = 105,4 Mvar

Frequency
f = 49.45 Hz

Transformer:

Input		Output	
U_L1L2 = 380 kV	I_L1 = 480 A	U_L1L2= 110 kV	I_L1 = 3250 A
U_L2L3 = 380 kV	I_L2 = 1230 A	U_L2L3= 110 kV	I_L2 = 2945 A
U_L3L1 = 380 kV	I_L3 = 911 A	U_L3L1= 110 kV	I_L3 = 3085 A

↓

Scroll between pages: Upwards or downwards arrow button
Next page: Left arrow button
Quitt page: Accept button

Figure 13: Measurements page (example)

3.6 The control menus

Use the control menus to set and change system parameters and counters, binary inputs and outputs. The control menus are fully configurable and will differ from application to application.

A control menu is divided into three parts, the main area (left), the menu branch list (top right), the available menus and commands list (right) and the help area (bottom). View the help area to find helpful information about how to navigate through the information displayed in the main area, how to perform operation such as clearing alarms etc. View the branch list

to see how menu branches has been traversed in order to get to the present menu. View the available menus and commands list to see what tasks that can be fulfilled from the present menu branch.

	Main Menu
Select submenu: Upwards and downwards arrow buttons Open submenu: Right arrow button Quit main menu: Left arrow button	Racks Parameters Interlocks Set/Reset Status

Figure 14: Main menu (example)

3.6.1 Navigating the control menus

Set the Operation mode switch in SET position to display the main menu. Use the **Up** or **Down** navigation buttons to select menus. The menu name will be underlined. Then press the **Accept** button or the **Right** navigation button to display the selected menu.

If a menu contains more items than can be displayed, use the **Up** or **Down** navigation buttons to scroll.

Pressing the **Left** navigation button always returns to the main menu.