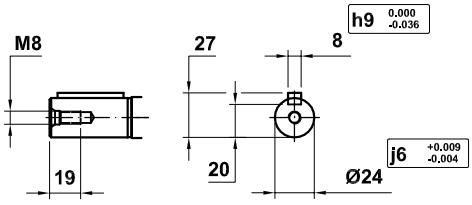

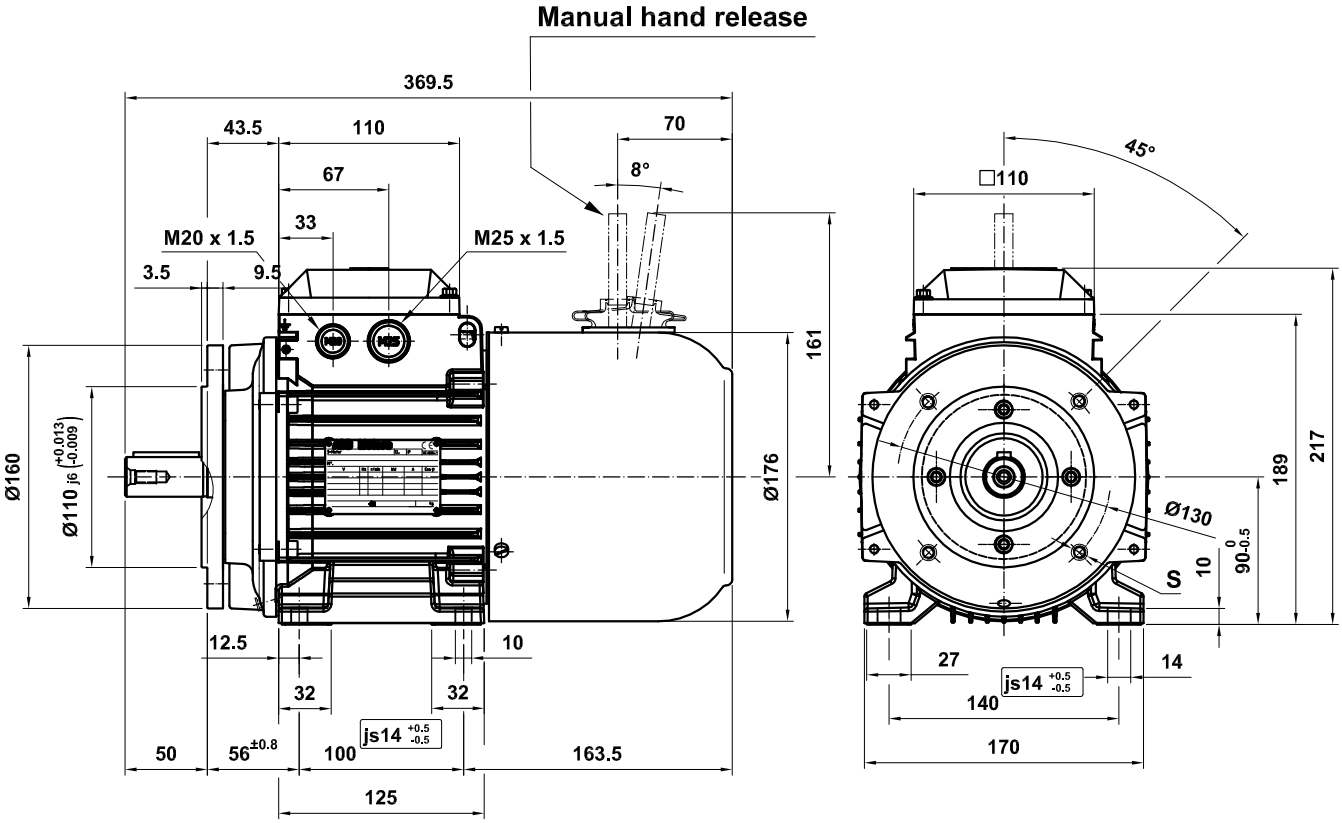

S = { Ø11 – Special IM 2001
M8 – Special IM 2101

M3ARF(S) 090 S

Motor Dimension Print	Motor Type : M3ARF(S) 090 S IMB34 FF(T)-130	Document Nº : A1.4875

Description :

Brake motor foot and flange mounted special (2-pieces) IM2001 or IM2101

Unit : Automation Products - Fábrica Motores	Issued by : EMD/G.Gállego	Replaces :	
Date : 2008-03-28	Approved by : EMD/G.Blanes	Replaced by :	
Asea Brown Boveri, S.A.	Customer Reference :		ABB