Master File

INSTALLATION • OPERATION • MAINTENANCE

INSTRUCTIONS

TYPE SGR-12 AUTOMATIC RECLOSING RELAY

CAUTION Before putting relays into service, remove all blocking which may have been inserted for the purpose of securing the parts during shipment, make sure that all moving parts operate freely, inspect the contacts to see that they are clean and close properly, and operate the relay to check the settings and electrical connections.

APPLICATION

The type SGR-12 Reclosing relay provides on instantaneous reclosure of an electrically operated circuit breaker, and automatically resets itself if the breaker remains closed for a predetermined adjustable time interval. If the breaker re-trips before the end of this interval the resetting operation of the relay is interrupted until the breaker is manually closed. Thus the reclosing relay is applicable to either attended or non-attended stations.

CONSTRUCTION AND OPERATION

The type SGR-12 relay consists of a synchronous motor operated time-delay element and a toggle-contact element.

The time-delay element, consists of a 600 R.P.M. (for 60 cycles) synchronous motor driving a contact arm through a gear train. A bridging contact member on the end of the contact arm closes a circuit through two stationary contact studs at the end of the time scale. The starting position, and length of travel of the contact arm is determined by the position of an adjustable stop, which can be set with reference to a scale on the upper gear plate by loosening the upper bearing screw of the last gear shaft and moving the stop to the desired position. The time-delay for full scale travel is approximately 92 seconds, and the smallest scale division represents a delay of slightly over 9 seconds.

When the motor is energized the armature is lifted magnetically to a point where a pinion on the lower end of the armature engages a gear on the motor countershaft. When the motor is de-energized this pinion de-meshes, and by this reduction of the resetting load on the spring which is a part of the final shaft assembly much faster resetting of the contacts is obtained.

A reactor connected in series with the motor is provided. A shorting link on a terminal block to which the reactor leads are connected provides a convenient means of shorting the reactor when the relay is to be used on a 115 volt circuit. If a 230 volt supply is used, the link should be positioned so that it does not short the reactor terminals.

The toggle element, in the lower part of the case, consists of two electromagnets between which is hinged on armature carrying two moving contacts. One of these contacts closes with a stationary contact in either position of the armature. A spring which is mounted on one of the electromagnet pole pieces presses on the upper end of the armature assembly. This imparts a toggle action to the armature action and causes the armature to remain definitely against the pole piece of the electromagnet to which it is last moved, either electrically or mechanically.

The operation of the relay and related control equipment may be followed by reference to Figs. 3 or 4. This diagram shows the condition previous to the initial closing of the breaker by means of the control switch. The

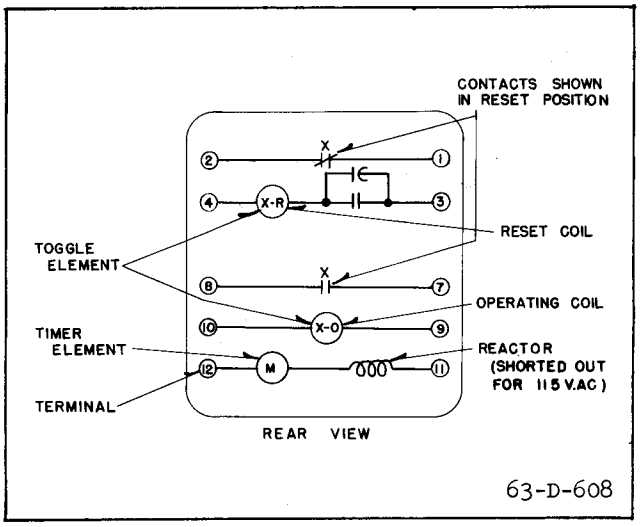

Fig. 1—Internal Schematic of the Type SGR-12 Reclosing Relay in the Standard Case.

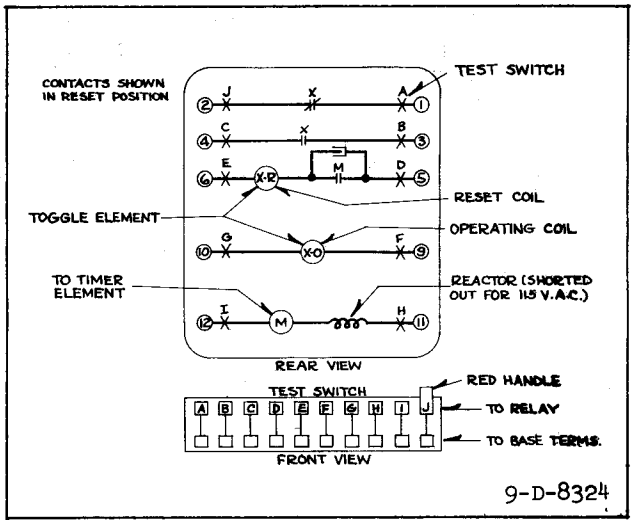

Fig. 2—Internal Schematic of the Type SGR-12 Reclosing Relay in the Type FT Flexitest Case.

toggle element 79X is shown in the reset position, with the back contact (the reclosing contact) closed and the front contact (the reset motor contact) open.

The breaker is closed by the control switch contact CS-C through the circuit consisting of the 52X coil and the cut-off relay 52Y back contact. When 52X contact closes, the closing coil 52C and the operating coil 79X-O of the toggle element are energized. Relay 79X performs its main function of opening the circuit to relay 52X so as to prevent a second reclosure should the breaker immediately open. The breaker closes and the toggle element front contacts 79X close, starting the 79M timer. If the breaker has not been closed on a fault, the 79M timer contact will close and the reset coil 79X-R will operate, which closes the 79X back contact in preparation for an immediate reclosure should a subsequent fault occur. As in the usual X-Y scheme, the closing of the breaker through the auxiliary switch 52-aa operates the breaker cut-off relay 52Y, which disconnects the 52X coil.

The breaker is now in the closed position with the relay and control circuit de-energized. When a fault occurs the circuit breaker is tripped open, and the breaker auxiliary switches 52bb and 52LC are closed. Due to the fact that the 79X back contact is already closed, the closing cycle will take place immediately. Should the breaker fail to stay in after this one reclosure, it will have tripped out before the 79M timer has closed its contacts to reset the toggle element, because the timer is always set for a longer time than the sum of the protective relay and breaker tripping times. In this case where the toggle element is not reset, the breaker will not close again automatically because the 79X contact to 52X is open. To close the breaker it is necessary to use the control switch CS-C.

CHARACTERISTICS

The type SGR-12 Reclosing relay is rated as follows:

Toggle Element	Motor
115/230 V 60 cycles or 24-125 v.d.c.	115/230 V 60 cycles
250 v.d.c.	115/230 V 60 cycles

The timer has a max. setting of 92 seconds. The small scale division is approximately 9 seconds (normal setting is usually 9 to 18 seconds).

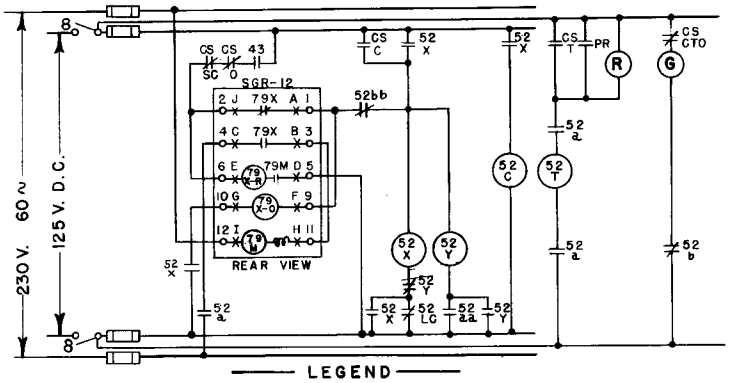

Fig. 3—Typical External Connections of the Type SGR-12 Reclosing Relay in the Type FT Case For Instantaneous Reclosure of a Breaker With d.c. Control.

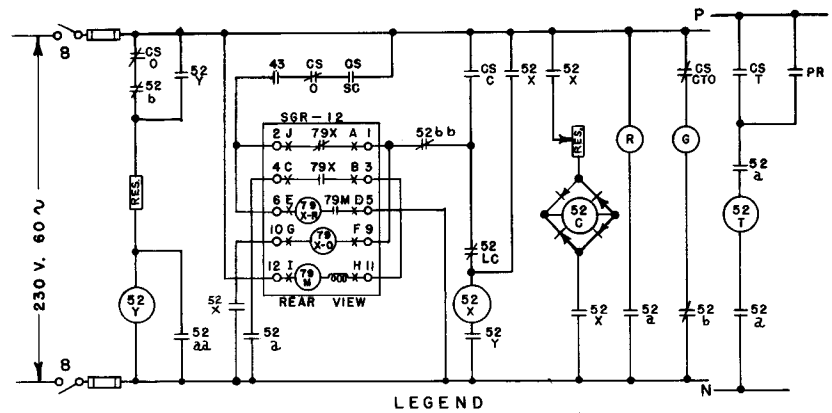

Fig. 4—Typical External Connections of the Type SGR-12 Reclosing Relay in the Type FT Case for Instantaneous Reclosure of a Breaker With a.c. Control.

The reclosing contacts will carry 5 amperes continuously. They will interrupt 3 amperes at 125 volts d-c in a non-inductive circuit or 30 amperes at 120 volts a-c.

RELAYS IN TYPE FT CASE

The type FT cases are dust-proof enclosures combining relay elements and knife-blade test switches in the same case. This combination provides a compact flexible assembly easy to maintain, inspect, test and adjust. There are six case sizes, designated as S10, S20, M10, M20, L10, L20. S refers to the small; M the medium; and L, the large size chassis frame. The numbers refer to the possible number of test switch positions, 10 or 20.

To remove the chassis, first remove the cover which exposes the relay elements and test switches for inspection and testing. Next open the elongated red handle switches. These should always be opened first before any of the black handle switches or the cam action latches. This opens the trip circuit to prevent accidental trip out. Then open all the remaining switches. With all the switches fully opened, grasp the two cam action latch arms and pull outward. Using the latch arms as handles, pull the chassis out of the case. The chassis can be set on a test bench in a normal upright position as well as on its top, back or sides for easy inspection, maintenance and test.

After removing the chassis a duplicate chassis may be inserted in the case or the blade portion of the switches can be closed and the cover put in place without the chassis.

When the chassis is to be put back in the case, the above procedure is to be followed in the reversed order. The elongated red handle switch should not be closed until after the chassis has been latched in place and all of the black handle switches closed.

The electrical circuits are as follows: Each terminal in the base connects thru a test switch to the relay elements in the chassis as shown on the internal schematic diagrams. The relay terminal is identified by numbers marked on both the inside and outside of the base. The test switch positions are identified by letters marked on the top and bottom surface of the moulded blocks. These letters can be seen when the chassis is removed from the case.

The potential and control circuits thru the relay are disconnected from the external circuit by opening the associated test switches.

A cover operated switch can be supplied with its contacts wired in series with the trip circuit. This switch opens the trip circuit when the cover is removed. This switch can be added to the existing type FT cases at any time.

The relays can be tested in service, in the case but with the external circuits isolated or out of the case as follows:

For testing in service, the voltages between the potential circuits can be measured conveniently by clamping #2 clip leads on the projecting clip lead lug on the contact jaw.

For testing in the case the ten circuit test plug can be inserted in the contact jaws, with all blades in the full open position. This connects the relay elements to a set of binding posts and completely isolates the relay circuits from the external connections by means of an insulating barrier on the plug. The plug is inserted in the bottom test jaws with the binding posts up and in the top test switch jaws with the binding posts down.

The external test circuits may be made to the relay elements by #2 test clip leads instead of the test plug.

For testing out of the case relay elements may be tested by using the ten circuit test plug or by #2 test clip leads as described above. The factory calibration is made with the chassis in the case and removing the chassis from the case will change the calibration values of some relays by a small percentage. It is recommended that the relay be

checked in position as a final check on calibration.

INSTALLATION

The reclosing relays should be mounted on switchboard panels or their equivalent in a location free from dirt, moisture, excessive vibration and heat. Mount the recloser vertically by means of the two mounting studs for the standard cases and the type FT projection case or by means of the four mounting holes on the flange for the semi-flush type FT case. Either of the studs or the mounting screws may be utilized for grounding the recloser. The electrical connections may be made direct to the terminals by means of screws for steel panel mounting or to terminal studs furnished with the recloser for ebony-asbestos or slate panel mounting. The terminal studs may be easily removed or inserted by locking two nuts on the studs and then turning the proper nut with a wrench.

ADJUSTMENTS AND MAINTENANCE

The proper adjustments to insure correct operation of this relay have been made at the factory and should not be disturbed after receipt by the customer. If the adjustments have been changed, the relay taken apart for repairs, or if it is desired to check the adjustments at regular maintenance periods, the instructions below should be followed.

The contact travel of the timing element determines the time delay, which must be adjusted to meet the requirements of the particular application. The bearing screw at the upper end of the last gear shaft is used to clamp a stop for the contact arm in position. The stop should be located so that the index mark on the contact arm has the desired position with reference to the scale, and the bearing screw then should be tightened securely.

In case the synchronous motor should be removed from its mounting plate, it should be reassembled so that the mesh of the motor countershaft pinion with its associated gear is about 2/3 of the depth of the gear teeth. One of the motor mounting screw holes has sufficient clearance to permit slight adjustment of the gear mesh. In case the motor should be damaged, the recloser should be returned to our Works for repair, or a complete replacement motor should be installed.

If the toggle element has been dismantled, it will be necessary to check the toggle action and the contact follow after reassembling it. The clearance hole for the mounting screw in the pole piece under the toggle spring is large enough to permit some variation in the pole piece position. The gap between the two pole pieces should be 1/4". If necessary, the toggle spring pressure should be adjusted so that about 3 oz. force is necessary to move the armature from one position to the other. This pressure can exceed 3 oz. but should not be great enough to prevent the relay from operating at 80% of the minimum voltage rating given on the nameplate. Because the duration of energization of the toggle element coils is normally less than one second, the relay can be used satisfactorily on a number of different voltages. Certain styles are rated 115-230 v. a.c. and 24-125 v.d.c. However, when using this relay on 230 v. a.c. or 125 v. d. c. it is desirable to increase the pressure of the toggle spring by means of the adjusting screw to avoid possible bouncing of the armature when the coils are energized at the higher energy input.

The contacts should make positively in either position of the armature. The contact support may be bent slightly if necessary to adjust the contact follow. The contacts should not make until the armature has passed the center position slightly.

All contacts should be periodically cleaned with a fine file. S#1002110 file is recommended for this purpose. The use of abrasive material for cleaning contacts is not recommended, because of the danger of embedding small particles in the face of the soft silver and thus impairing the contact.

REPAIRS AND RENEWAL PARTS

Repair work can be done most satisfactorily at the factory. However, interchangeable parts can be furnished to the customers who are equipped for doing repair work. When ordering parts, always give the complete nameplate data.

ENERGY REQUIREMENTS

The timer motor current is approximately 21 milliamperes at rated voltage, and at 115 volts the burden is 2.4 v.a. The toggle element coils of the recloser rated at 115-230 v. a.c. and 24-125 v. d.c. take approximately 60 v.a. at 115 v. a.c. or 9 watts at 24 v. d.c.

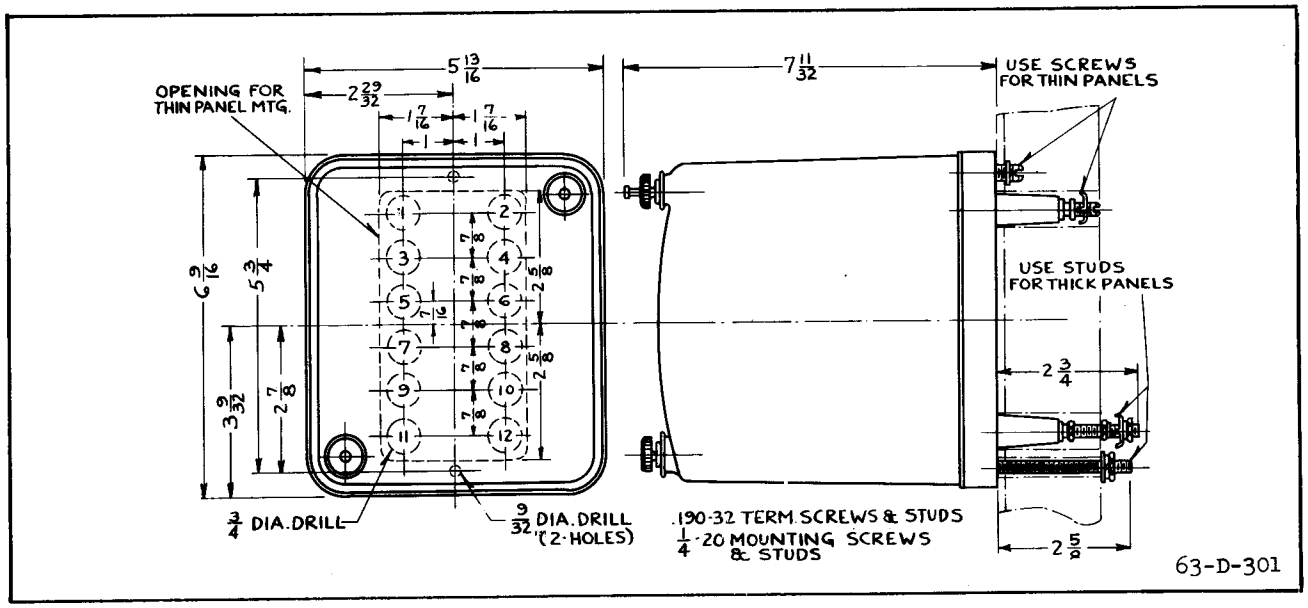

Fig. 5—Outline and Drilling Plan for the Standard Projection Case. See the Internal Schematic for the Terminals Supplied. For Reference Only.

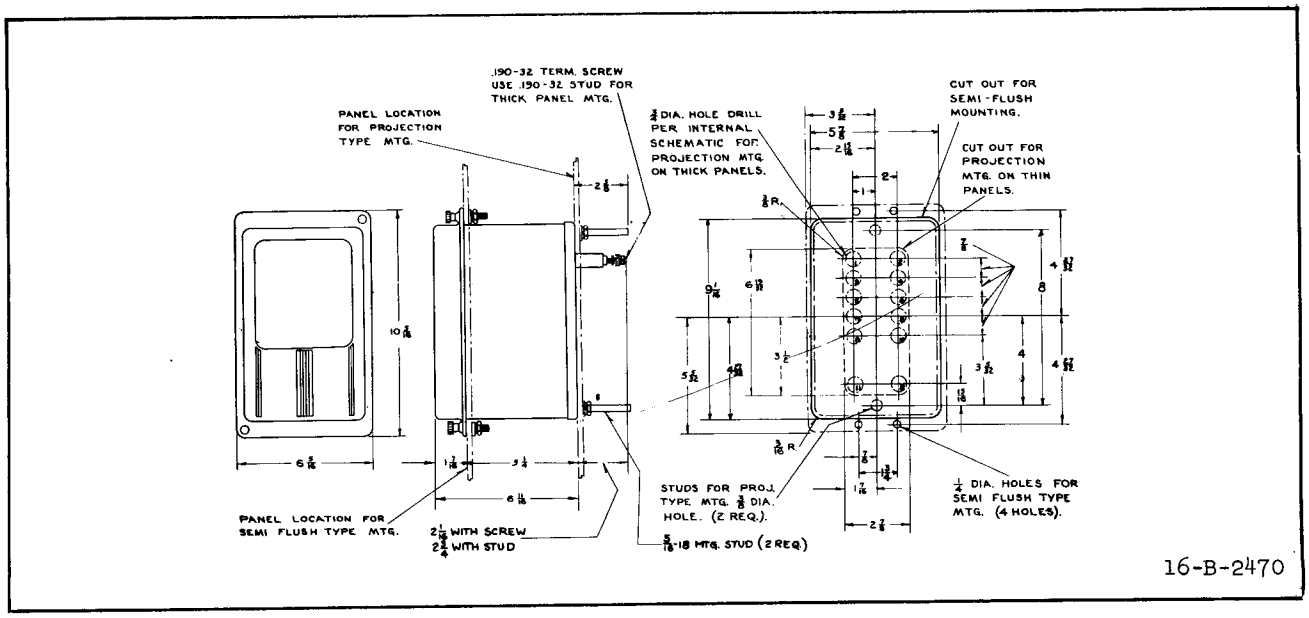

Fig. 6—Outline and Drilling Plan for the S10 Projection or Semi-flush Type FT Flexitest Case. See the Internal Schematic for the Terminals Supplied. For Reference Only.

WESTINGHOUSE ELECTRIC CORPORATION

METER DIVISION • **NEWARK, N.J.**

Printed in U.S.A.