High impedance differential relay

RADHA

1MRK 509 015-BEN
Page 1
Issued: April 2006
Revision: C
Data subject to change without notice

(se970893)

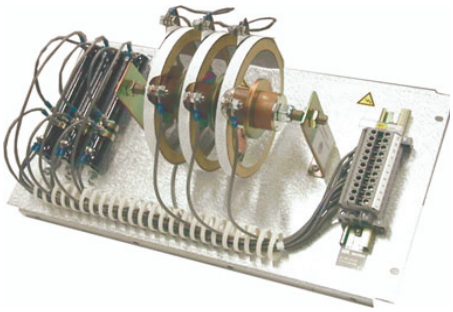

(xx03000048)

Features

- Secure operation, not affected by CT saturation
- Voltage limiting resistors
- High speed operation, typical one cycle
- Three-phase operation
- 10-400 V setting in five models
- Electromechanical pick-up element
- Test device included
- CT supervision optional

Application

The high impedance differential relays are suitable as reliable restricted earth (single-phase) or short-circuit (three-phase) protection for generators, auto transformers, reactors, motors and busbars.

Applications are not limited by CT saturation at internal or external faults since this is considered in the setting formulas. CT's must be dedicated for this application and without turn correction.

Non-linear resistors are used to protect against peak voltages during saturation.

The operating level of the high impedance relay is to be set to the lowest value not giving operation caused by faults outside the zone.

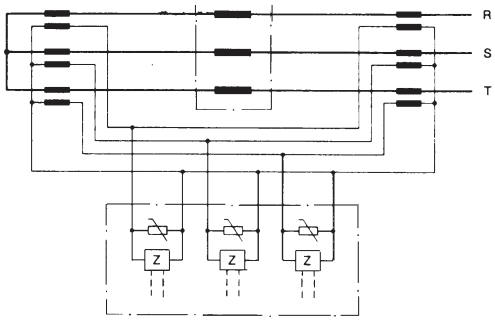

(97000023)

Fig. 1 Principle application of a high impedance relay

Design

The RADHA relay is part of the COMBI-FLEX family. It is available in eight versions, five of these versions each with reconnecting operate values U_{s1} and U_{s2}, and three versions with continuously settable operate value between 100 and 400 V. The lowest operate value is 10 V. The basic relay includes RTXP 18 test switch, RXTLA 1 rectifier modules, RXTCA 1 capacitor modules and RXID 1 overcurrent relays.

In all versions the operate value of the protection is set on resistors, either mounted in the RXTLA 1 unit or for the 100-400 V version on adjustable resistors mounted on an apparatus plate together with the non-linear resistors. The RXID 1 is an instantaneous electromechanical relay containing one heavy-duty and two medium- (trip-) duty contacts. It has fixed operate values. The relay current-measuring circuit is fed through the short-circuiting connector type RTXK so that the current transformer secondary circuit is automatically short-circuited when the relay is removed from the terminal base.

Flag relay type RXSF 1 for trip indication is included in five versions.

The RADHA is normally connected for U_{s1}, operate value, when delivered. On request, non standard operate value can be obtained.

The RADHA relay has been designed with filter circuits which will attenuate the dc component. Practical experience has shown that a relay setting, according to the formula below, is sufficient to secure correct relay operation, even for the most extreme transient CT saturation.

U_s is calculated for the maximum fault-current using the formula:

$$U_s > I_2 r_2$$

where

U_s =	Operating voltage setting
I_2 =	Secondary current at maximum fault current
r_2 =	Sum of maximum secondary CT and lead loop-resistance up to junction point

When a fault current occurs, a voltage is rapidly generated across the relay circuit. To prevent this voltage from becoming too high, the relay is connected in parallel with a non-linear resistor. The relay operates when the primary fault current amounts to:

$$I_F > n\,(i_n + \Sigma_{im} + i_{res})$$

where

n =	Turns ratio of the current transformer
i_n =	Relay operating current (normally 20 mA)
Σi_m =	The sum of the magnetizing current at the operating voltage U_s for all current transformers involved
i_{res} =	Current through the non-linear resistor at the voltage U_s, see Fig. 2.

A single-phase version of RADHA is available under designation RADHD, and described in section 04, Transformer and Reactor protection.

A CT open-circuit supervision can be provided. This function is based on overcurrent relays RXIG 28 and will prevent unwanted trip from RADHA if the CT-circuit is opened. The current setting of the supervision function is well below the sensitivity of the differential current function. Blocking from the supervision shall be delayed 3-5 s.

Technical data

Rated frequency, f_r	50 or 60 Hz
Operate time (output relay not included)	10-20 ms
Auxiliary dc voltage, EL	24, 48-55, 110-125, 220-250 V, -20% to +10%
Permitted ambient temperature	-25°C to +55°C

Insulation tests	
Dielectric test, 50 Hz, 1 min: voltage circuits to contact circuits and earth current circuits to other circuits and earth	 2,0 kV 2,5 kV
Contact data	See 1MRK 508 015-BEN

Operate voltage U_{s1}/U_{s2}		**Maximum cont. voltage U_{s1}/U_{s2}**	**Approximate relay operate current**
50 Hz	**60 Hz**		
10/15 V	10/15 V	34/60 V	20 mA
20/30 V	19/29 V	74/82 V	16 mA
40/50 V	38/48 V	99/106 V	16 mA
70/100 V	67/97 V	125/145 V	16 mA
100-400 V		110% of U_s	75 mA

Mounting:

- RADHA is provided on apparatus bars. When additional mounting is required specify a 4U equipment frame for 19” rack mounting or a type RHGX 12 or 20 case for panel mounting.
- The non-linear resistors are mounted on a separate 19” plate with terminal strip. The resistors can also be supplied as a separate item.

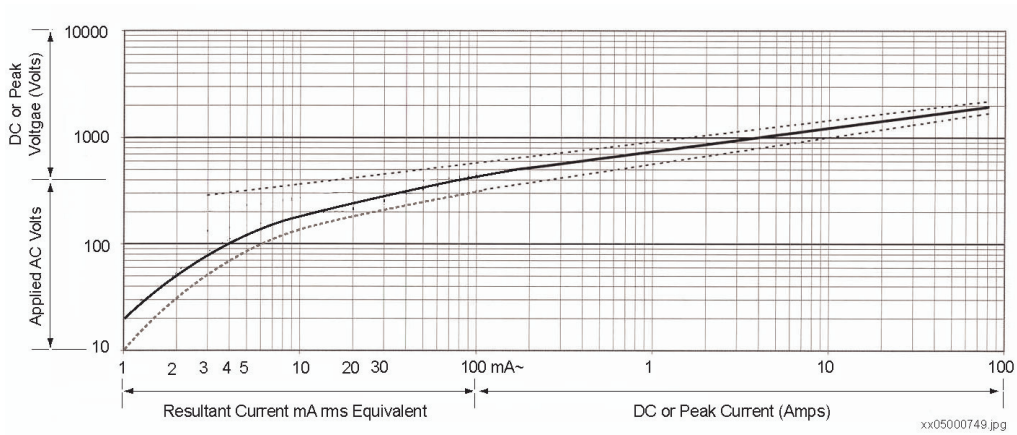

Fig. 2 Current voltage characteristics for the non-linear resistors. In the range 10-200 V, 50 Hz the maximum current is approx. 1-30 mA.

Diagram

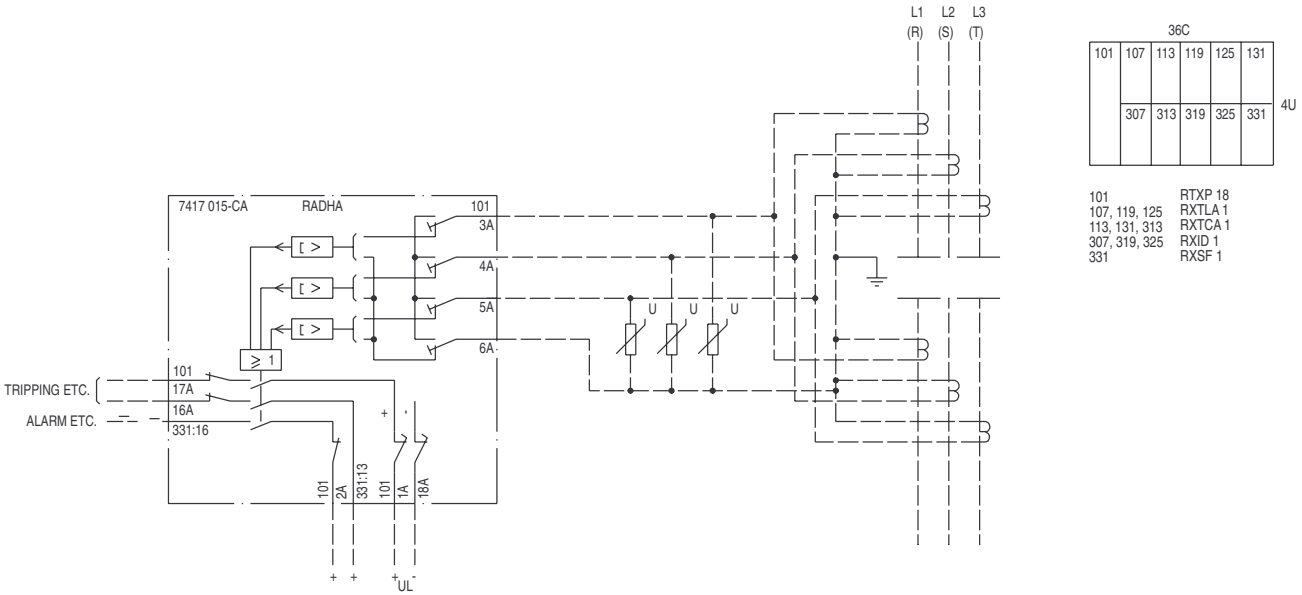

Fig. 3 RADHA terminal diagram 7417 015-CAA

Ordering

Specify:

- Quantity
- Ordering No.
- Rated frequency, f_r
- Auxiliary dc voltage, EL
- Operate value, U_s (see Technical data)
- Desired wording on the lower half of the test switch face plate max. 13 lines with 14 characters per line.

Accessories:

- Non-linear resistor

Ordering table

Operate voltage U_{s1}/U_{s2}	Flag	Size	Weight kg	Circuit/terminal diagram	Ordering No.
10/15 V	No	4U 42C	6,0	7417 015-DA/DAA	RK 646 009-DA
	Yes	4U 48C	6,5	7417 015-FA/FAA	RK 646 009-FA
20-100 V*	No	4U 36C	5,1	7417 015-AA/AAA	RK 646 009-AA
	Yes	4U 36C	5,2	7417 015-CA/CAA	RK 646 009-CA
	Yes[2)]	4U 42C	5,4	7417 015-KA/KAA	RK 646 009-KA
100-400 V [3)]	No	4U 36C	7,7	7417 013-AC/ACA	RK 646 006-AC[1)]
	Yes	4U 36C	8,2	7417 013-CA/CAA	RK 646 006-CA[1)]
	Yes[2)]	4U 42C	8,4	7417 013-DA/DAA	RK 646 006-DA[1)]

1) Includes non-linear resistors 1MRK 002 059-C and adjustable resistors mounted on a 6U 19” apparatus plate
2) With phase-indication
3) State factory setting
*See table on page three to make correct voltage selections.

Accessories

Non-linear resistors for RADHA

Operate voltage U_s	Resistors with brackets (loose delivery)		Resistors mounted on apparatus plate
10-400 V	Single-phase	1MRK 002 059-B	----
	3-phase	1MRK 002 059-C	RK 795 101-BA

Option

CT Open circuit supervision for RADHA

Circuit/terminal diagram	Order number
74310104-BA/BAA	1MRK 002 024-UA

Reference

User's Guide UG 03-6011 E

Manufacturer

ABB Power Technologies AB
Substation Automation Products
SE-721 59 Västerås
Sweden
Telephone: +46 (0) 21 34 20 00
Facsimile: +46 (0) 21 14 69 18
Internet: www.abb.com/substationautomation