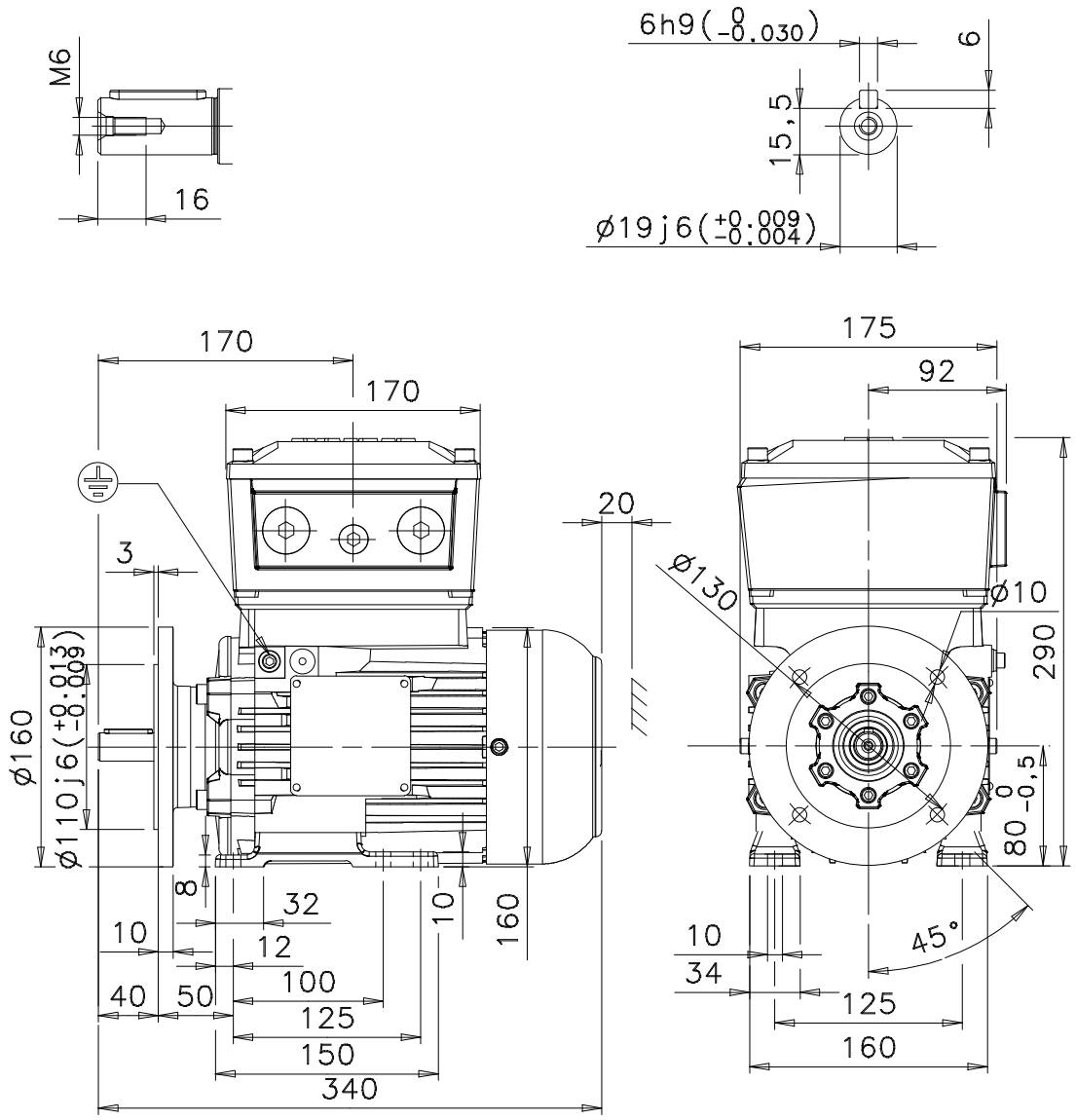

Additional information:

Dimension Print	Motor Type: M3JP 80M_2-8 B35,V36 FF 130	Document No: 3GZF500208-19 A 13 JP 80 A
Description: STANDARD SQUIRREL CAGE MOTOR		

Unit:	Electrical Machines, LV Motors	Issued by:	P.Tihinen	Replaces:
Date:	21.05.2004	Approved by:	R.Nykvist	Replaced by:

ABB Oy	Customer Reference:	ABB