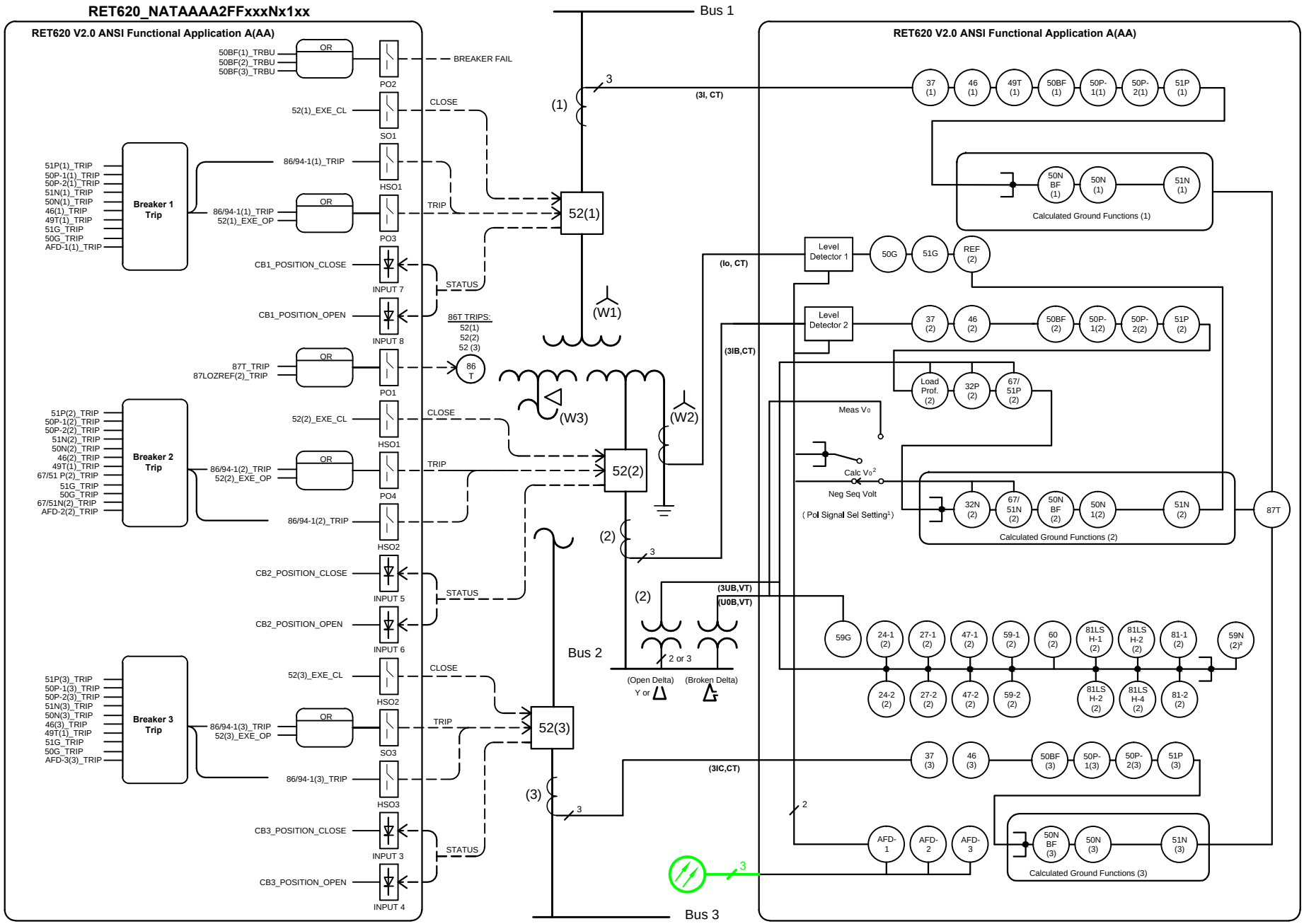

Notes:

1. Rotary Switch emulates drop down menu for "Pol Signal Sel" parameter setting in PCM600. Switch position shown for default setting (Neg Seq Volt).
2. "Pol Signal Sel" parameter setting Calc Vo, 59N function not applicable for open delta connected VTs.

TITLE: **SINGLE LINE DIAGRAM (TYPICAL)**	SOFTWARE TYPE: AUTOCAD 2014	© Copyright 2015 ABB All rights reserved	SIZE A	DWG. NO. **1MAC552789-DR**	REV. A
RELAY ORDER CODE: **NATAAAA2FFE1BNN1XF**	ABB Protective Relays and Switches, Coral Springs Fl, U.S.A.			SCALE:	SHEET 1 OF 10

RET620_NATAAAA2FFxxxNx1xx

FT-1/TS1
Style No: 837A407G01
Code No: 083

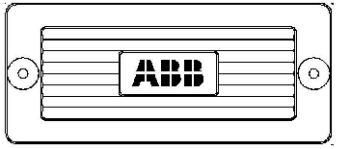

FT-1/TS2
Style No: 774B430G20
Code No: 171

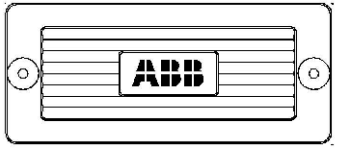

FT-1/TS3
Style No: 774B430G20
Code No: 171

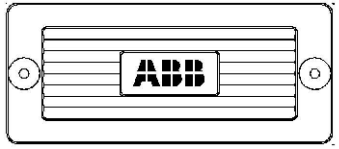

FT-1/TS4
Style No: 129A501G01
Code No: 001

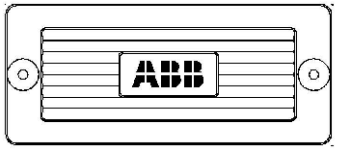

FT-1/TS5
Style No: 129A501G01
Code No: 001

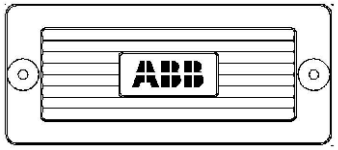

FT-1/TS6
Style No: 129A501G01
Code No: 001

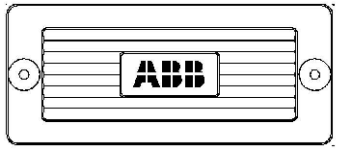

General Notes:

1. Style and code numbers for FT-1 switches provide black covers and handles, screw terminals and standard depth. Poles selection follows arrangement shown in this drawing set. For custom designs, different selection options can be made by using FT-1 configurator at ft1switch.com
2. Refer to 620 series ANSI Installation Manual for relay and cutout dimensions (Document ID: 1MAC457436-iB, Revision: A, Product version 2.0)

TITLE: **FRONT PANEL ELEVATION**	SOFTWARE TYPE: AUTOCAD 2014	© Copyright 2015 ABB All rights reserved	SIZE A	DWG. NO. **1MAC552789-DR**	REV. **A**
RELAY ORDER CODE: **NATAAAA2FFE1BNN1XF**	ABB Protective Relays and Switches, Coral Springs Fl, U.S.A.			SCALE:	SHEET 2 OF 10

RET620_NATAAAA2FFxxxNx1xx

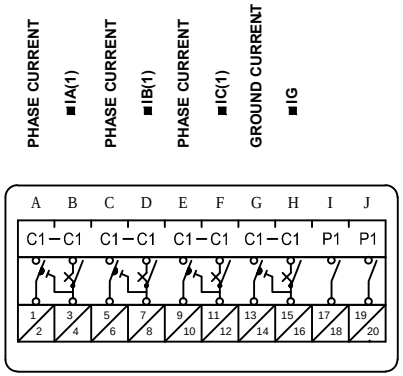

FT-1/TS1

(CT(1) CURRENTS, TRANSFORMER NEUTRAL CURRENT)

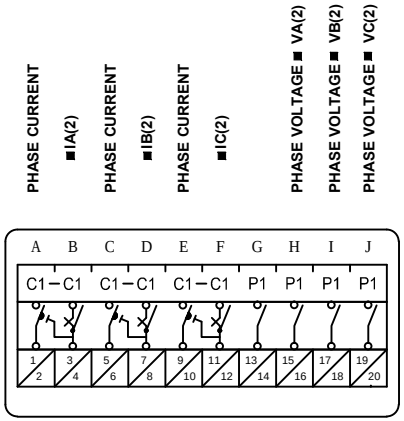

FT-1/TS2

(CT(2)CURRENTS AND BUS 2 PHASE POTENTIALS)

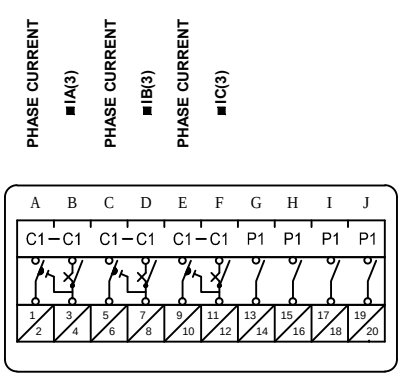

FT-1/TS3

(CT(3) CURRENTS)

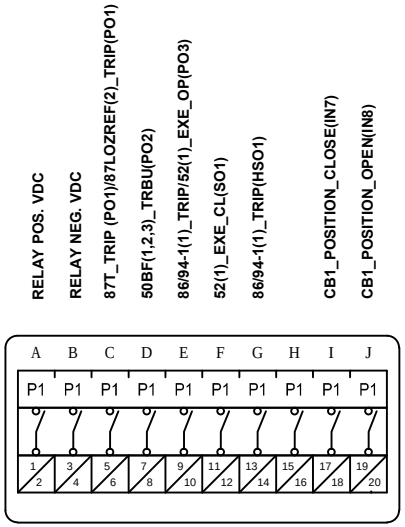

FT-1/TS4

(CB 52(1) BINARY I/O AND POWER SUPPLY)

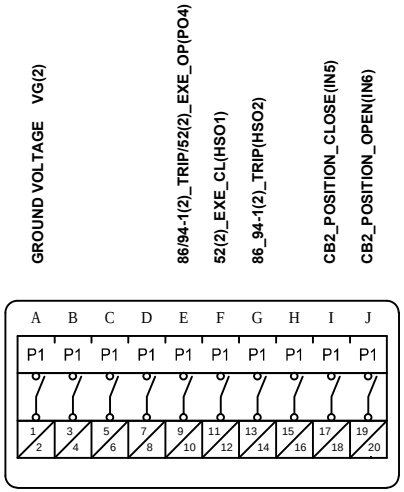

FT-1/TS5

(CB 52(2) BINARY I/O AND BUS 2 GROUND POTENTIAL)

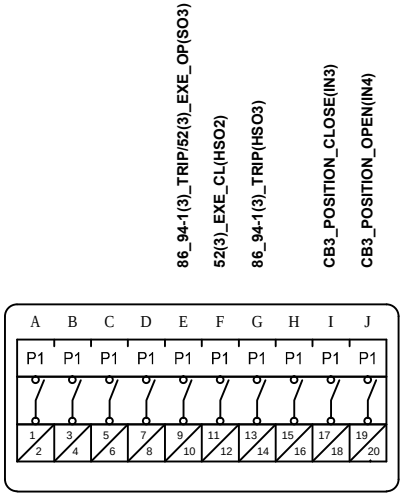

FT-1/TS6

(CB 52(3) BINARY I/O)

TITLE: **FT-1 SWITCH ARRANGEMENT**	SOFTWARE TYPE: AUTOCAD 2014	© Copyright 2015 ABB All rights reserved	SIZE A	DWG. NO. **1MAC552789-DR**	REV. **A**
RELAY ORDER CODE: **NATAAAA2FFE1BNN1XF**	ABB Protective Relays and Switches, Coral Springs Fl, U.S.A.			SCALE:	SHEET 3 OF 10

ABB

RET620_NATAAAA2FFxxxNx1xx

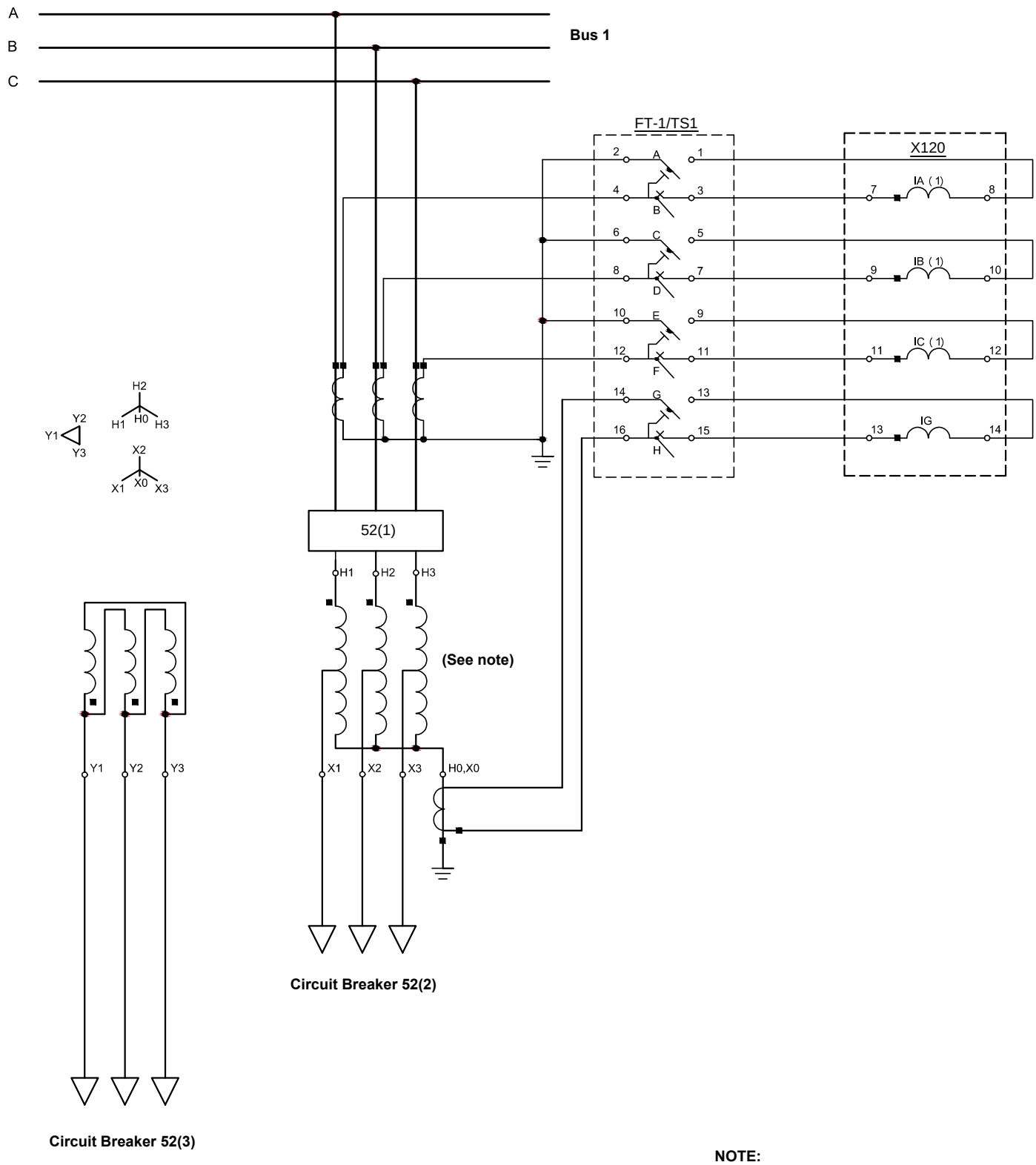

NOTE:
Connections shown are for a 30°.
ANSI standard autotransformer.

TITLE: **AC SCHEMATIC - BUS 1, TRANSFORMER (TYPICAL)**	SOFTWARE TYPE: AUTOCAD 2014	© Copyright 2015 ABB All rights reserved	SIZE A	DWG. NO. **1MAC552789-DR**	REV. **A**
RELAY ORDER CODE: **NATAAAA2FFE1BNN1XF**	ABB Protective Relays and Switches, Coral Springs Fl, U.S.A.			SCALE:	SHEET 4 OF 10

RET620_NATAAAA2FFxxxNx1xx

Transformer

52(2)

FT-1/TS2

RET620

X120

IA (2)

IB (2)

IC (2)

X115

VA (2)

VB (2)

VC (2)

FT-1/TS5

VG (2)

Open Delta *

Broken Delta

A

B

C

Bus 2

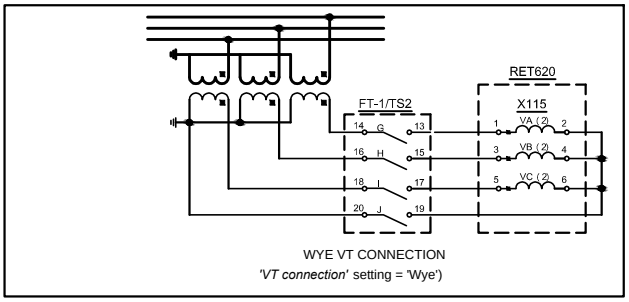

WYE VT CONNECTION

'VT connection' setting = 'Wye')

* For relay voltage connections shown set Analog input Voltage 'VT connection' setting to Wye' for metering to work correctly. Refer to application manual for alternate connections to relay for open delta connections using 'Delta' VT connection setting.

TITLE: **AC SCHEMATIC - CB52(2), BUS 2 (TYPICAL)**	SOFTWARE TYPE: AUTOCAD 2014	© Copyright 2015 ABB All rights reserved	SIZE A	DWG. NO. **1MAC552789-DR**	REV. **A**
RELAY ORDER CODE: **NATAAAA2FFE1BNN1XF**	ABB Protective Relays and Switches, Coral Springs Fl, U.S.A.			SCALE:	SHEET 5 OF 10

RET620_NATAAAA2FFxxxNx1xx

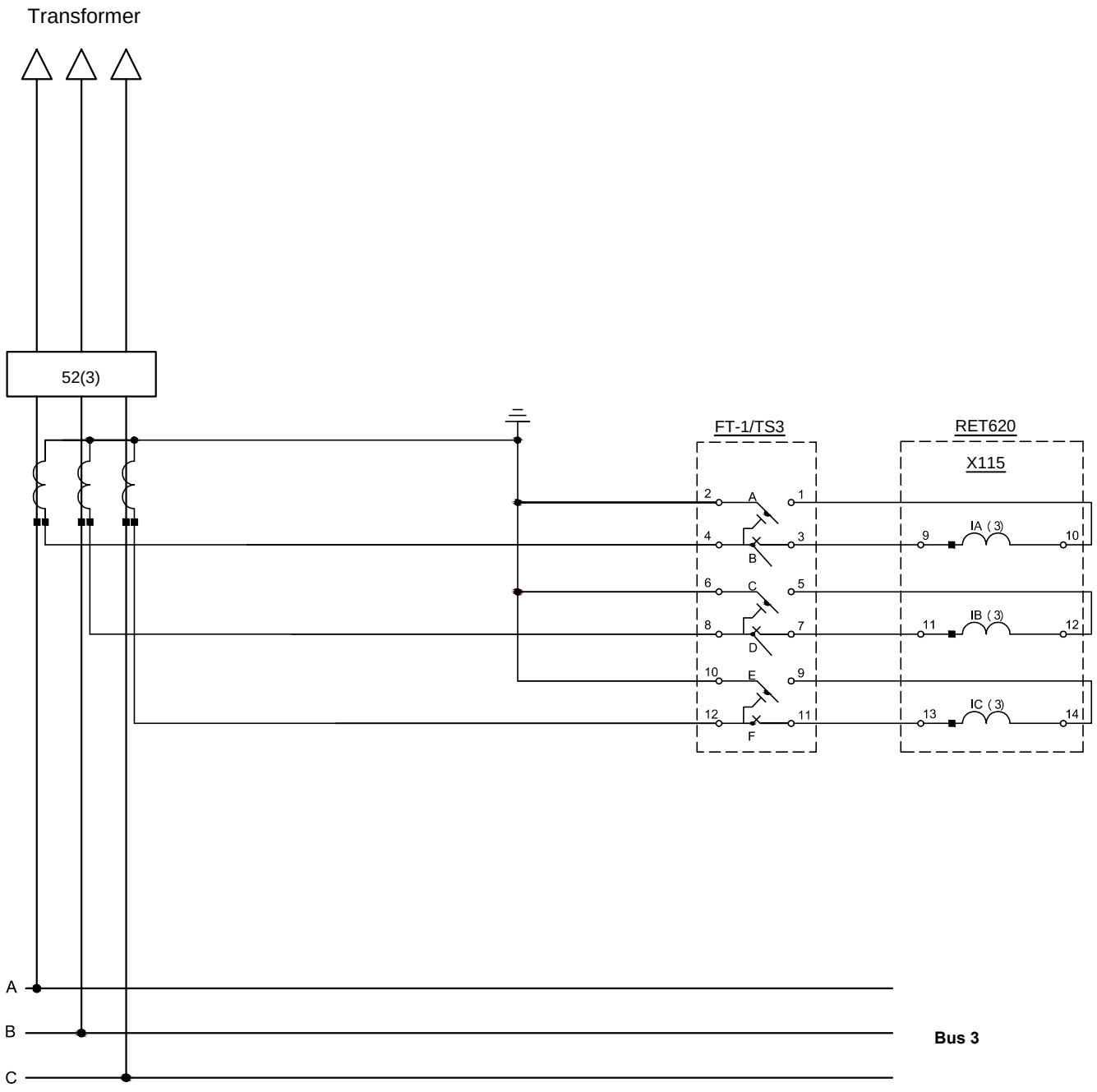

TITLE: **AC SCHEMATIC - CB52(3), BUS 3 (TYPICAL)**	SOFTWARE TYPE: AUTOCAD 2014	© Copyright 2015 ABB All rights reserved	SIZE A	DWG. NO. **1MAC552789-DR**	REV. **A**
RELAY ORDER CODE: **NATAAAA2FFE1BNN1XF**	ABB Protective Relays and Switches, Coral Springs Fl, U.S.A.			SCALE:	SHEET 6 OF 10

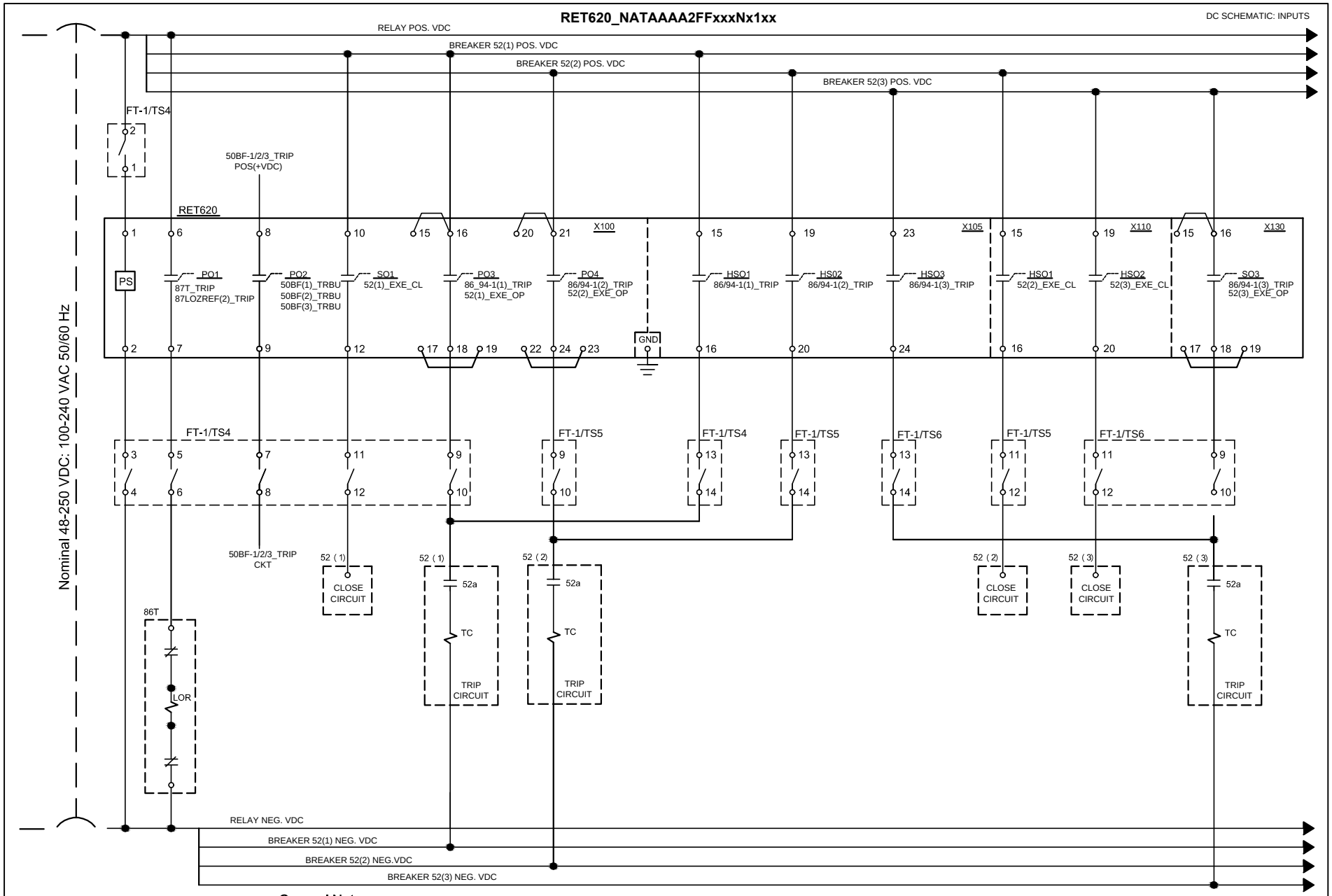

General Notes:

1. Binary I/O shown is from default PCM600 Application Configuration Tool (ACT) . Connections shown are typical though more connections may be needed for specific application.
2. Connections are Trip Circuit Supervision without an external resistor. For this application the Trip Circuit Monitoring function is blocked when the circuit breaker is open. Refer to technical manual for connections with an external resistor to monitor trip coil when breaker is open or closed.

TITLE: **DC SCHEMATIC - OUTPUTS, PS (TYPICAL)**	SOFTWARE TYPE: AUTOCAD 2014	© Copyright 2015 ABB All rights reserved	SIZE A	DWG. NO. **1MAC552789-DR**	REV. **A**
RELAY ORDER CODE: **NATAAAA2FFE1BNN1XF**	ABB Protective Relays and Switches, Coral Springs Fl, U.S.A.			SCALE:	**SHEET** 7 OF 10

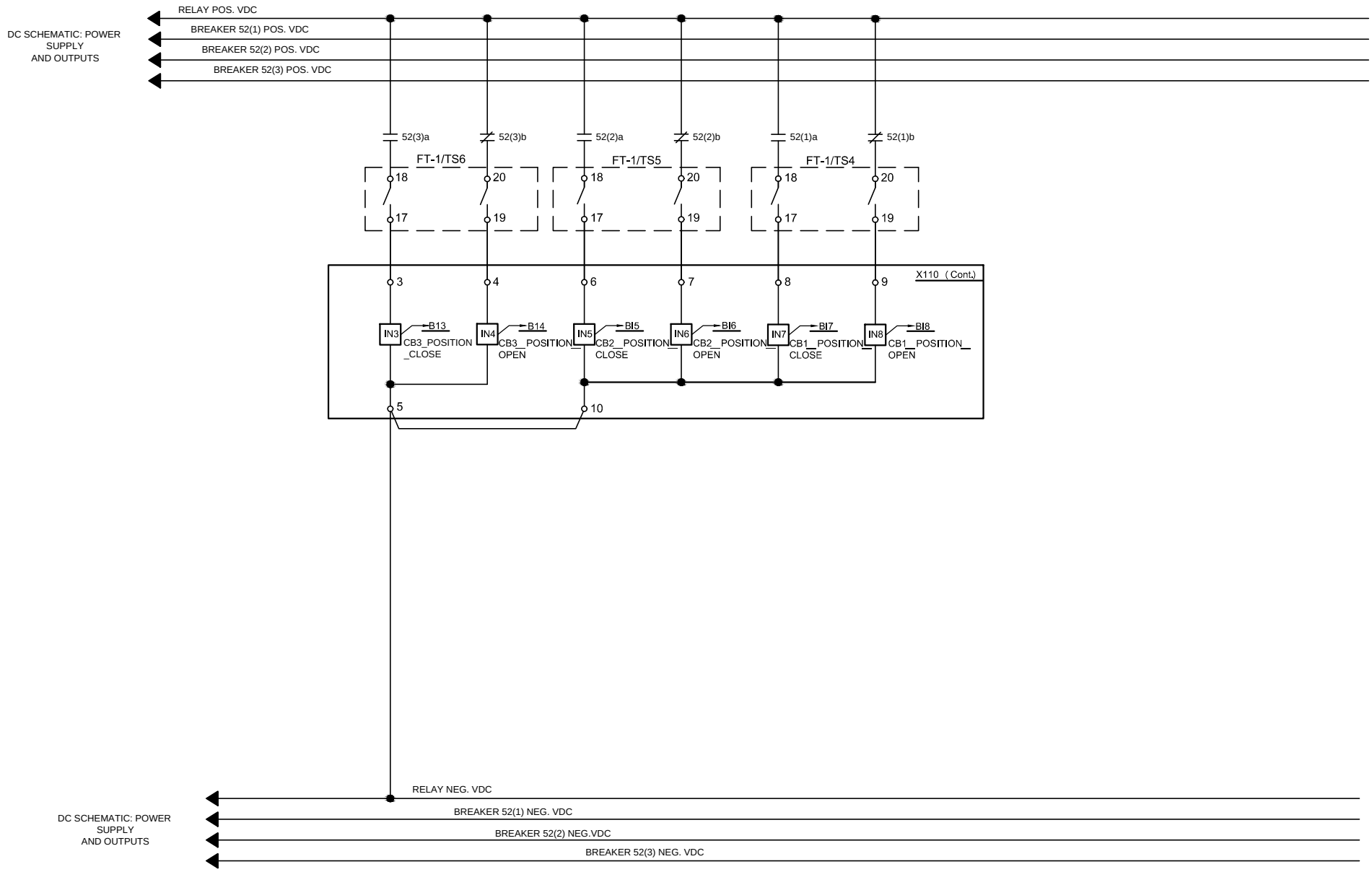

TITLE: **DC SCHEMATIC - INPUTS (TYPICAL)**	SOFTWARE TYPE: AUTOCAD 2014	© Copyright 2015 ABB All rights reserved	SIZE A	DWG. NO. **1MAC552789-DR**	REV. **A**
RELAY ORDER CODE: **NATAAAA2FFE1BNN1XF**	ABB Protective Relays and Switches, Coral Springs Fl, U.S.A.			SCALE:	SHEET 8 OF 10

RET620_NATAAAA2FFxxxNx1xx

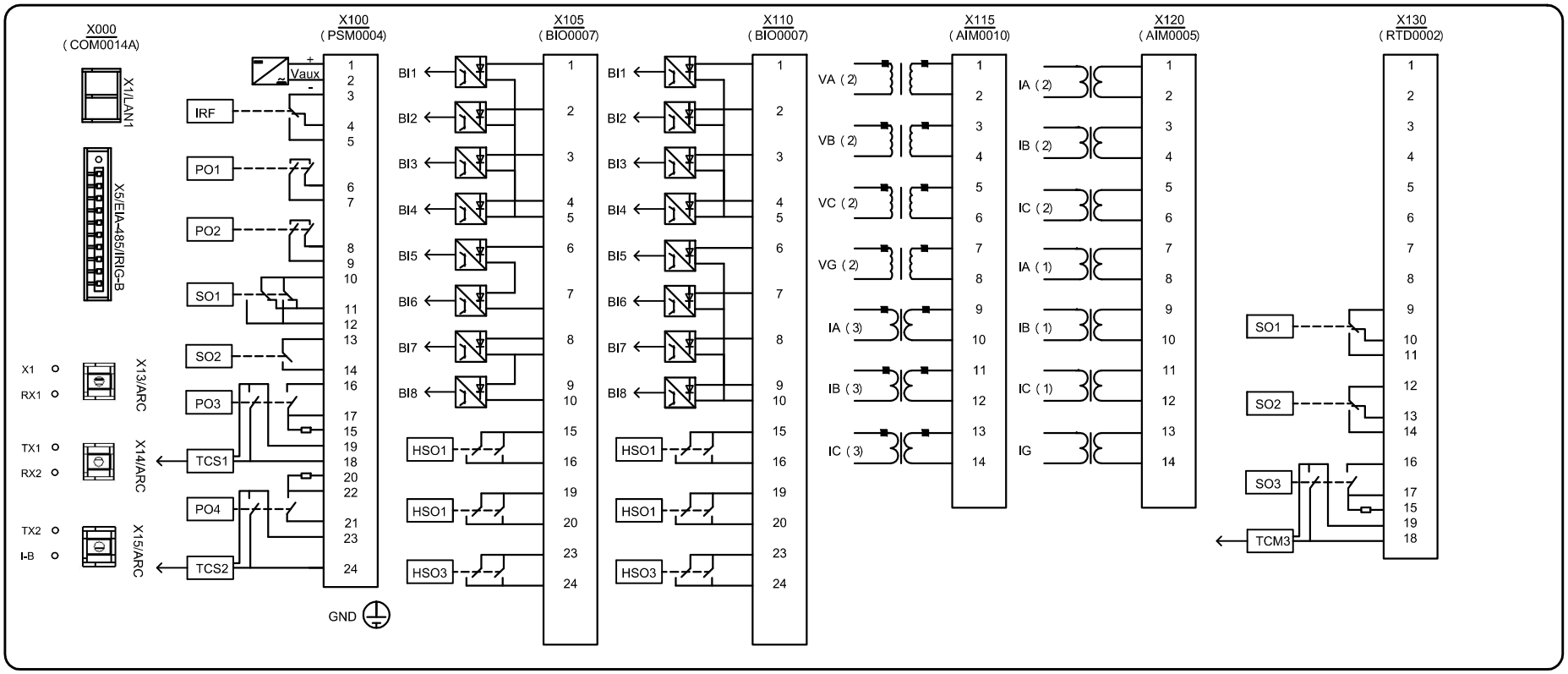

RR
RET620

X000-X1:
X000-X5:
X000-X13:
X000-X14:
X000-X15:

X100-1: XX1
X100-2: XX3
X100-3:
X100-4:
X100-5:
X100-6:
X100-7: XX5
X100-8:
X100-9: XX7
X100-10:
X100-11:
X100-12: XX11
X100-13:
X100-14:
X100-15: X100-16
X100-16: X100-15
X100-17: X100-19
X100-18: XX9
X100-19: X100-17
X100-20: X100-21
X100-21: X100-20
X100-22: X100-23
X100-23: X100-22
X100-24: WW9

X105-1:
X105-2:
X105-3:
X105-4:
X105-5:
X105-6:
X105-7:
X105-8:
X105-9:
X105-10:
X105-11:
X105-12:
X105-13:
X105-14:
X105-15:
X105-16: XX13
X105-17:
X105-18:
X105-19:
X105-20: WW13
X105-21:
X105-22:
X105-23:
X105-24: VV13

X110-1:
X110-2:
X110-3: VV17
X110-4: VV19
X110-5: X110-10
X110-6: WW17
X110-7: WW19
X110-8: XX17
X110-9: XX19
X110-10: X110-5
X110-11:
X110-12:
X110-13:
X110-14:
X110-15:
X110-16: WW11
X110-17:
X110-18:
X110-19:
X110-20: VV11
X110-21:
X110-22:
X110-23:
X110-24:

X115-1:TT13
X115-2: X115-4
X115-3: TT15
X115-4: X115-2, X115-6
X115-5: TT17
X115-6: X115-4
X115-7: WW1
X115-8: WW3
X115-9: SS3
X115-10: SS1
X115-11: SS7
X115-12: SS5
X115-13: SS11
X115-14: SS9

X120-1: TT3
X120-2: TT1
X120-3: TT7
X120-4: TT5
X120-5: TT11
X120-6: TT9
X120-7: UU3
X120-8: UU1
X120-9: UU7
X120-10: UU5
X120-11: UU11
X120-12: UU9
X120-13: UU15
X120-14: UU13

X130-1:
X130-2:
X130-3:
X130-4:
X130-5:
X130-6:
X130-7:
X130-8:
X130-9:
X130-10:
X130-11:
X130-12:
X130-13:
X130-14:
X130-15: X130-16
X130-16: X130-15
X130-17: 130-19
X130-18: VV9
X130-19: X130-17
GND:

TITLE: **CONNECTION DIAGRAM - RELAY**	SOFTWARE TYPE: AUTOCAD 2014	© Copyright 2015 ABB All rights reserved	SIZE A	DWG. NO. **1MAC552789-DR**	REV. **A**	ABB
RELAY ORDER CODE: **NATAAAA2FFE1BNN1XF**	ABB Protective Relays and Switches, Coral Springs Fl, U.S.A.			SCALE:	SHEET 9 OF 10	

RET620_NATAAAA2FFxxxNx1xx

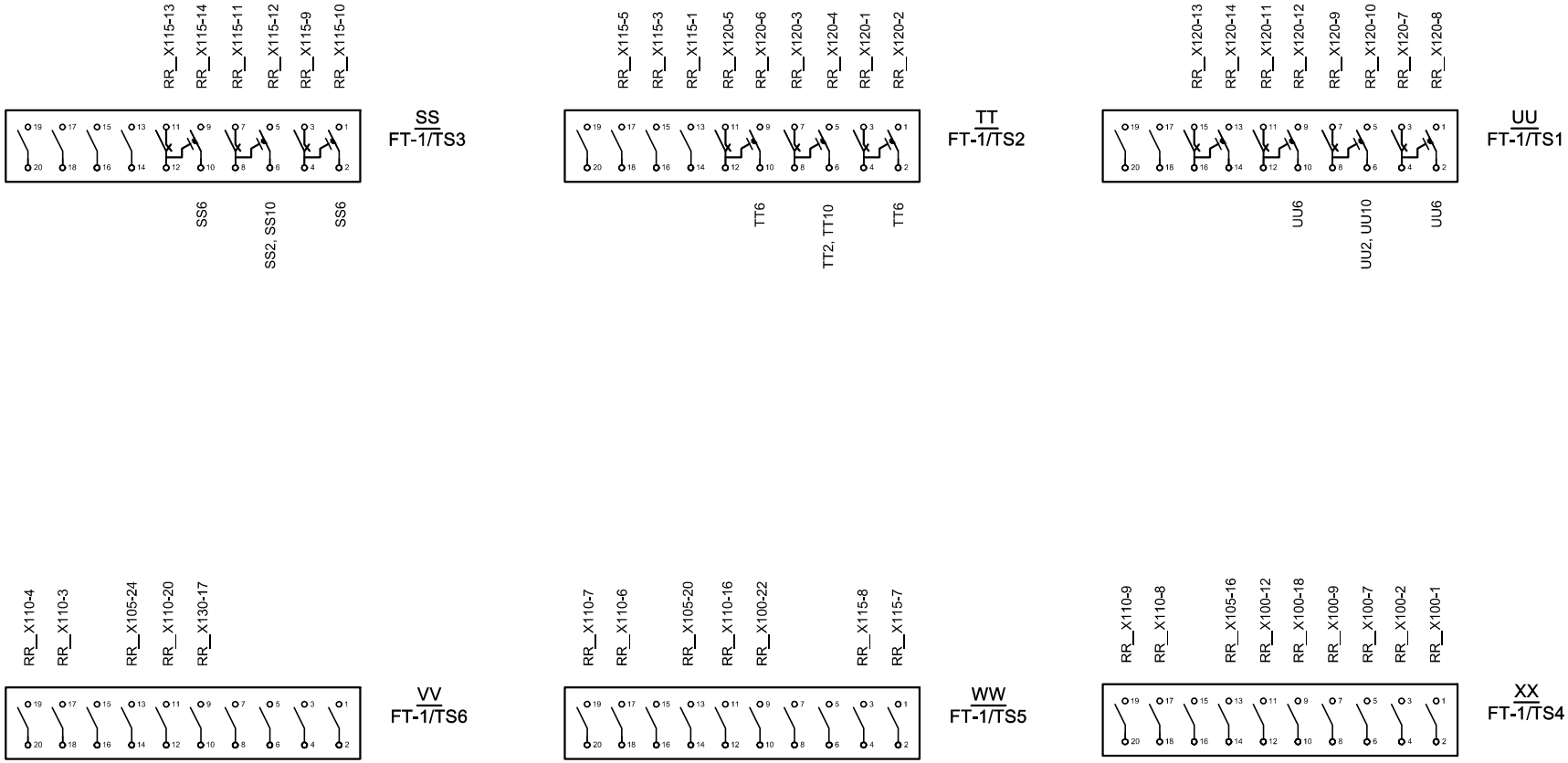

TITLE: **CONNECTION DIAGRAM - FT-1 SWITCHES**	SOFTWARE TYPE: AUTOCAD 2014	© Copyright 2015 ABB All rights reserved	SIZE A	DWG. NO. **1MAC552789-DR**	REV. **A**
RELAY ORDER CODE: **NATAAAA2FFE1BNN1XF**	ABB Protective Relays and Switches, Coral Springs Fl, U.S.A.			SCALE:	SHEET 10 OF 10

ABB