SELECTION GUIDE

Emax 2 embedded automatic throwover

Creating the main-gen automatic transfer scheme

Quickly and easily create a main-gen open transition automatic throwover (ATO) scheme using ABB's Emax 2 all-in-one embedded solution.

Table of contents

01. Introduction 04

02. Emax 2 air circuit breaker ordering code construction 06

03. Accessories 11

Introduction

This guide will assist you in selecting the two (2) circuit breakers required to automatically switch from the main utility power line to a generator using ABB's Emax 2 all-in-one embedded ATO solution.

A system able to switch the electrical power supply from the main line to an emergency line helps minimize problems caused by faulty conditions in the public power network. These operations, commonly know as "automatic switching," comprise sequences that automatically control the installation components (circuit breakers play a fundamental role) without intervention from a human operator.

To help guarantee that power is supplied to the load, redundancy in supply sources type N+1, usually consisting of a transformer and emergency generator (or, as an alternative, a second transformer), is a fundamental requirement.

Use this document in conjunction with the ABB Emax 2 configurator, the embedded white paper **1SDC007115G0202** and the Emax 2 circuit breaker technical catalog **1SXU200040C0201** to create your own main-gen ATO solution.

Emax 2 circuit breakers are configured by the user specifically for their unique application. A complete Emax 2 circuit breaker catalog number consists of 20 characters. For your main-gen ATO to operate properly, the characters shown without gray boxes in this guide are mandatory, while characters shown in gray boxes are for options and may be filled with a zero (0) or X if not utilized. Two separate breakers are required for the main-gen ATO.

A simple selection list for the Emax 2 would be as follows:

- Ekip Touch (or higher) trip unit
- Ekip Measuring (or higher) package
- Ekip supply
- Ekip link
- Ekip signaling 2k
- Ekip Com actuator
- Spring-charging motor
- YO opening coil
- YC closing coil
- ATO license

Additional accessories such as pilot devices, mechanical interlocks and mechanically interlocked contactors are included in this selector.

NOTE: Application-specific wiring diagrams can be found in document **1SDM000009A1001**.

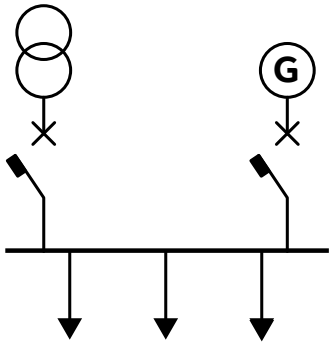

—
Legend
R, S T, N: 3 phases + neutral
MEAS: Ekip measuring/ internal voltage plug
Line 1/generator: Power source (transformer or generator)

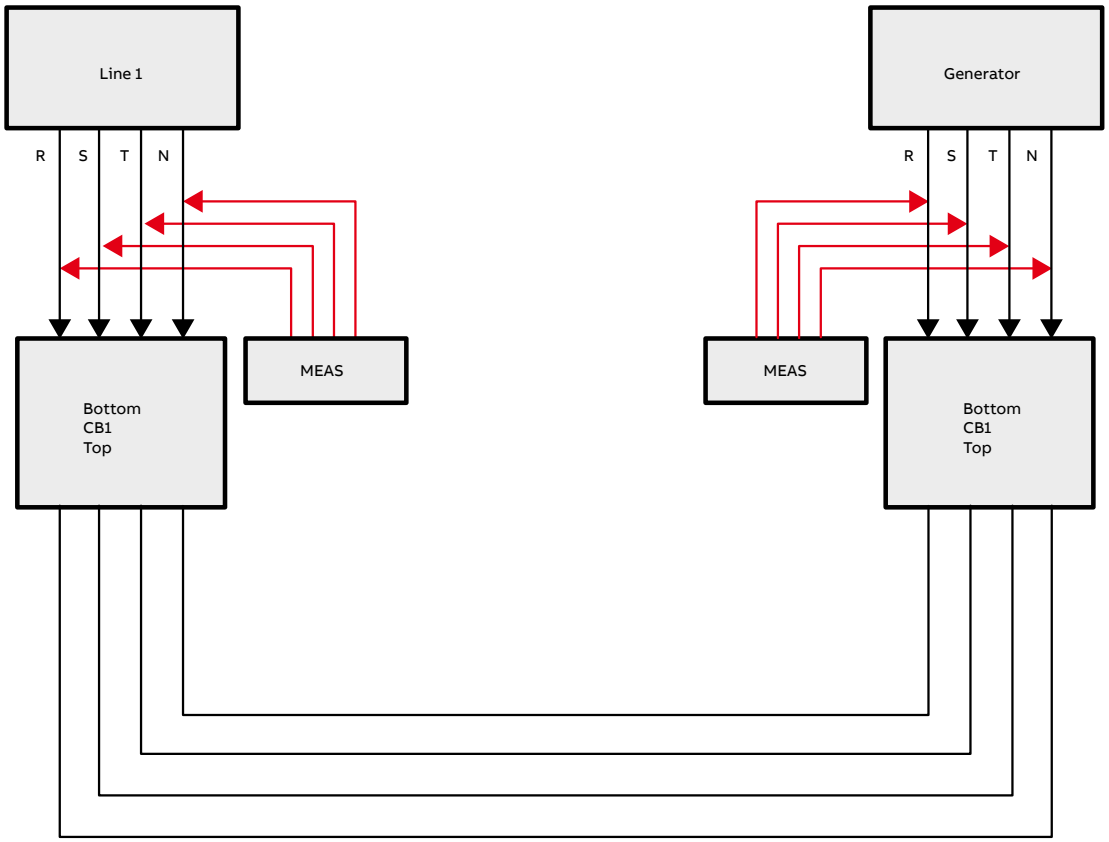

Instructions for ordering

Main-gen ATO

Emax 2 circuit breaker order code explanation for embedded main-generator ATO

Two separate breakers are required for the main-gen ATO.
A complete Emax 2 breaker catalog number consists of 20 characters.
All 20 characters are required. The characters shown without gray boxes must be selected from the choices listed in these pages for proper configuration. Characters shown in gray boxes are for options and may be filled with a zero (0) or X if not utilized.

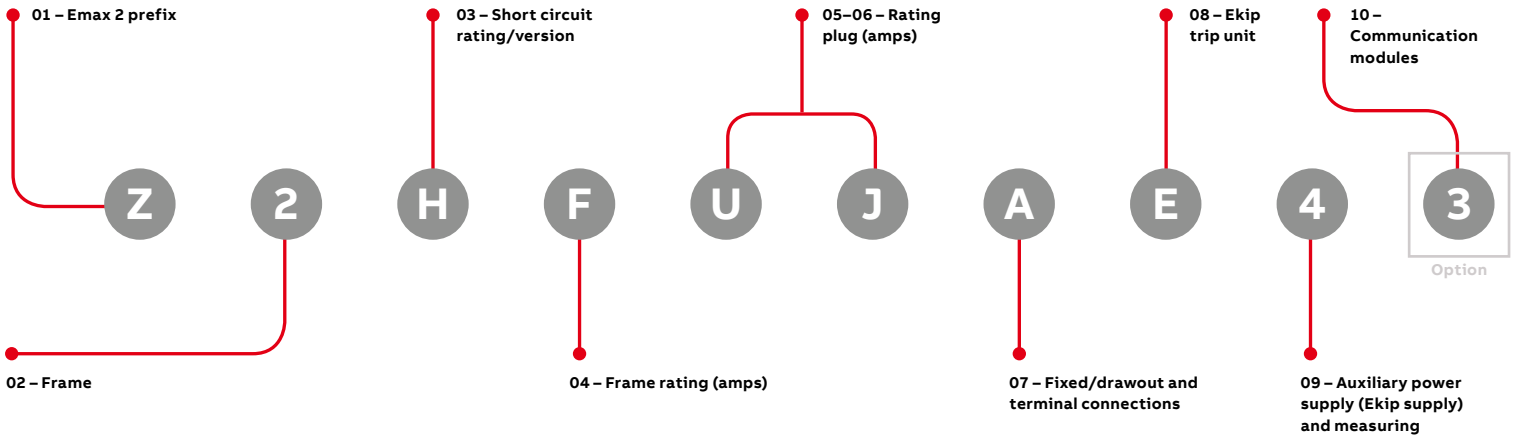

01 – Emax 2 prefix

	Code
Standard AC version	Z
Triple certification (UL/IEC/CCC)	L
ML Naval version (IEC)	M
800–900 V AC version (IEC)	9

02 – Frame

	E1.2	E2.2	E4.2	E6.2	Code E6.2/f
3p	1	2	4	6	–
4p – N left	A	B	C	D	E
4p – N right	F	G	H	J	K

03 – Short circuit rating/version

	B	C	N	S	H	V	L	Code X
UL kA at 508 V AC	42	–	50	65	85	100	–	–
UL kA at 635V AC	42	–	50[1]	65[1]	85	85/ 100[4]	–	–
IECkA at 440 V AC	42	50	66	85	100	150	–	150
IECkA at 690 V AC	42	42	66[2]	66	85/ 100[3]	100	–	100

1) E1.2N =42 kA
2) E1.2N= 50 kA
3) E2.2H and E4.2H = 85 kA / E6.2H = 100 kA
4) E2.V and E4.2V = 85 kA / E6.2V = 100 kA

05–06 – Rating plug(amps)

																Code
UL	UA	UB	UC	UD	UE	UF	UG	UH	UJ	UK	UL	UN	UQ	UR	US	UT
	100	200	250	400	600	800	1000	1200	1600	2000	2500	3200	3600	4000	5000	6000
IEC	EA	EB	EC	ED	EE	EF	EG	EH	EJ	EK	EL	EN	ER	ES	ET	–
	100	200	250	400	630	800	1000	1250	1600	2000	2500	3200	4000	5000	6300	–
IECL-OFF	LA	LB	LC	LD	LE	LF	LG	LH	LJ	LK	LL	LN	LR	LS	LT	–
	100	200	250	400	630	800	1000	1250	1600	2000	2500	3200	4000	5000	6300	–
IEC RC	RA	RB	RC	RD	RE	RF	RH	RK	RN	RR	–	–	–	–	–	–
	100	200	250	400	630	800	1250	2000	3200	4000						–

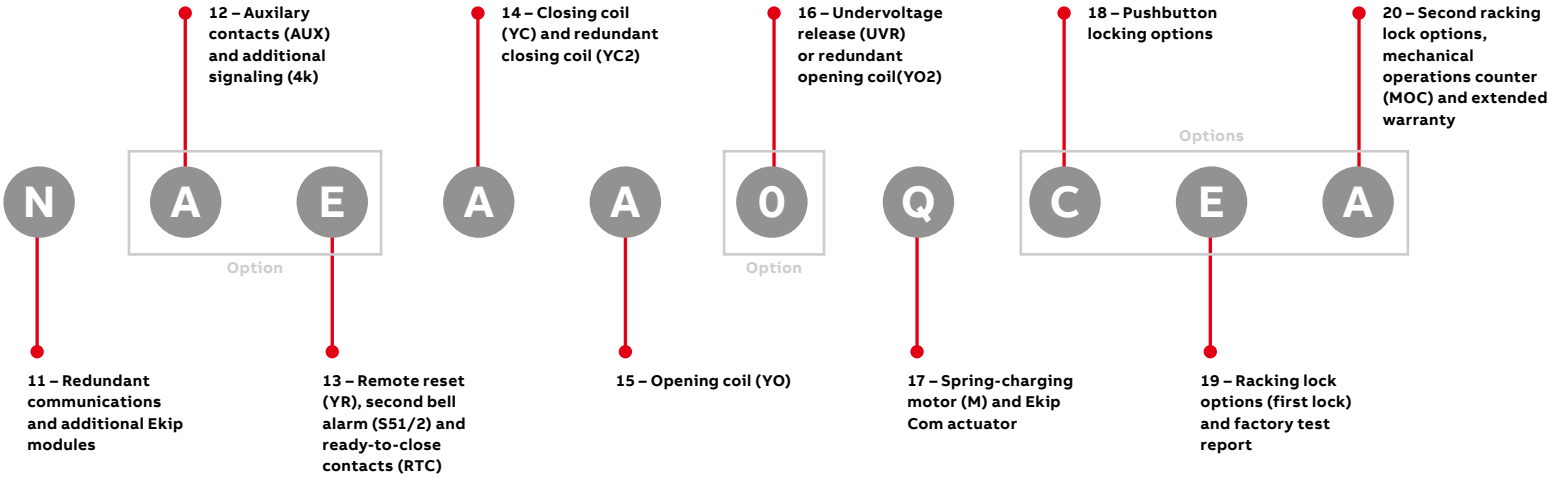

—

04 – Frame rating(amps)

												Code
	A	B	C	D	E	F	G	H	Z	J	K	L
UL	250	400	800	1200	1600	2000	2500	3200	3600	4000	5000	6000
	M	N	P	Q	R	S	T	U	V	W	X	Y
IEC	250	630	800	1000	1250	1600	2000	2500	3200	4000	5000	6300

—

07 – Fixed/drawout and terminal connections

							Code
Drawout (less cradle)	A						
Fixed (std. terminals)	B (1)						
Fixed (alt. terminals)							
Upper terminals Lower terminals	Horiz. rear (HR)(2)	Vert. rear (VR)	Front (F)(7)	Ext. front (EF)(7)	FCCUAL lugs(7)	Horiz. rear spread (SHR) (6)(7)	Vert. rear spread (SVR) (6)(7)
Horiz. rear (HR)(2)	C (3)	D	E	F	G	–	–
Vert. rear (VR)	H	J (4)	K	L	M	–	–
Front (F)(7)	N	P	Q (5)	R	S	–	–
Ext. front (EF)(7)	T	U	V	W	X	–	–
FCCUAL lugs(3)(7)	2	3	4	5	6	–	–
Horiz. rear spread (SHR) (6)(7)	–	–	–	–	–	7	
Vert. rear spread (SVR) (6)(7)	–	–	–	–	–	–	8

1) Standard terminals: E1=F / E2.2–E6.2 = HR with exception of E4.2 3200 A and 3600 A, and E6.2 6000 A, which are VR
2) Not available for E4.2 3200 A, 3600 A and E6.2 6000 A
3) Available for E1.2 only (IEC version)
4) Not available for E4.2 3200 A, 3600 A and E6.2 6000 A
5) Available for E2.2–E6.2 (IEC versions)
6) Available for E2.2 and E4.2 (IEC version)
7) Not UL listed

Instructions for ordering

Main-gen ATO

08 – Ekip trip unit

	Protection functions	LI	LSI	LSIG
		Code		
Ekip trip unit + standard 250 V bell alarm	Touch	D	E	F
	Touch + Power Controller [1]	G	H	I
	Hi-Touch	–	J	K
	Hi-Touch + Power Controller [1]	–	L	M
	G Touch	–	–	N
	G Touch + Power Controller [1]	–	–	P
	G Hi-Touch	–	–	Q
	G Hi-Touch + Power Contoller[1]	–	–	R
	Touch	V	W	X
	Touch + Power Controller [1]	Y	Z	1
	Hi-Touch	–	2	3
Ekip trip unit + optional 24 V DC bell alarm	Hi-Touch + Power Controller [1]	–	4	5
	G Touch	–	–	6
	G Touch + Power Controller [1]	–	–	7
	G Hi-Touch	–	–	8
	G Hi-Touch + Power Contoller[1]	–	–	9

1) Ekip Power Controller requires the use of Ekip Measuring or Measuring Pro modules
Note: Please reference embedded ATO white paper

09 – Auxiliary power supply (Ekip supply) and measuring

	Measuring package	1% Accuracy measuring[1]
	Code	
24–48 V DC Supply	4	5
110 –240 V AC/DC supply	7	8
Measuring – Top supply	A	B
Measuring – External mounting cables	C	D
Measuring – Top supply +24 V DC supply	E	F
Measuring – Top +110–240 V AC/DC supply	G	H
Measuring – External mounting +24 V DC supply	J	K
Measuring – External mounting +110–240 V AC/DC supply	L	M

1) Standard with Hi-Touch or greater

10 – Communication modules[1][2] (optional)

							Code
None	0	–	–	–	–	–	–
Single	2	3	4	5	6	7	8
	Modbus RS–485	Modbus TCP/IP	Profibus	Profinet	DeviceNet™	EtherNet/IP™	IEC 61850

1) Maximum of 3 modules for E2.2, E4.2, E6.2
2) Maximum of 2 modules for E1.2

11 – Redundant communications and additional Ekip modules (optional)

	Code
Combos Ekip Link + Signaling 2k-1	N

12 – Auxilary contacts (AUX) and additional signaling (4k) (optional)

			Code
None	0		
	-	4 AUX (4Q) 400 V[3]	4 AUX (2Q+2Q) 24 and 400 V
	-	A	C
6 AUX (6Q) 400 V[1]	-	E	G
6 AUX (6Q) 24 V[1]	-	J	L
6 AUX (3Q+3Q)400 and 24 V[1]	-	N	Q
4k Signaling[1][2]	-	R	T

(1) Not compatible with E1.2
(2) Not compatible with Ekip Dip or switch disconnectors
(3) Provided as standard for all circuit breakers
Note: Options O, D, H and M are for use with switch disconnectors only

13 – Remote reset (YR), second bell alarm (S51/2) and ready-to-close contacts (RTC) (optional)

						Code
None	0					
	–	YR 24 V AC/DC	YR 110 V AC/DC	YR 220 V AC/DC	S51/2 24 V DC	S51/2 250 V DC [1]
	–	A	B	C	P	Q
RTC 24 V DC	D	E	F	G	R	S
RTC 250 V AC/DC	H	J	K	L	T	U

(1) Not compatible with E1.2
(2) Not compatible with Ekip Dip or switch disconnectors
(3) Provided as standard for all circuit breakers
Note: Options O, D, H and M are for use with switch disconnectors only

Note: Please reference embedded white paper **1SDC007115G0202** for additional information
Note: For additional information on the Emax 2 circuit breaker, please reference technical catalog **1SXU200040C0201**

Instructions for ordering

Main-gen ATO

14 – Closing coil (YC) and redundant closing coil (YC2)

											Code
	24 V AC/DC	30 V AC/DC	48 V AC/DC	60 V AC/DC	110–120 V AC/DC	120–127 V AC/DC	220–240 V AC/DC	240–250 V AC/DC	380–400 V AC	415–440 V AC	480–500 V AC
YC	A	B	C	D	E	F	G	H	K	L	M
YC + YC2	N	P	Q	R	S	T	U	V	X	Y	Z

Note: YC2 will have the same control voltage as YC1

15 – Opening coil (YO)

											Code
	24 V AC/DC	30 V AC/DC	48 V AC/DC	60 V AC/DC	110–120 V AC/DC	120–127 V AC/DC	220–240 V AC/DC	240–250 V AC/DC	380–400 V AC	415–440 V AC	480–500 V AC
YO	A	B	C	D	E	F	G	H	K	L	M

16 – Undervoltage release (UVR) or redundant opening coil (YO2) (optional)

											Code
None	0										
	24 V AC/DC	30 V AC/DC	48 V AC/DC	60 V AC/DC	110–120 V AC/DC	120–127 V AC/DC	220–240 V AC/DC	240–250 V AC/DC	380–400 V AC	415–440 V AC	480–500 V AC
UVR	A	B	C	D	E	F	G	H	K	L	M
YO2 only	N	P	Q	R	S	T	U	V	X	Y	Z

17 – Spring-charging motor (M) and Ekip Com actuator

						Code
	24–30 V AC/DC	48–60 V AC/DC	100–130 V AC/DC	220–250 V AC/DC	380–415 V AC	440–480 V AC (1)
M with standard aux. for status indication of springs + Ekip Com actuator	H	J	K	L	M	P
M with 24 V DC aux. contacts for status indication of springs + Ekip Com actuator	Q	R	S	T	U	V

Note: Standard aux =E1.2 =250 V / E2.2–E6.2 =400 V
(1) Not compatible with E1.2

18 – Pushbutton locking options (optional)

								Code
None	0							
				Pushbutton covers(PBC)		Padlock in open position(PLC)		
		PBC special key	PBC padlock (4 mm)	PBC padlock (7 mm)	PBC padlock (8 mm)	PLC (4 mm)	PLC (7 mm)	PLC (8 mm)
		2	3	4	5	6	7	8
Key lock in open position different keys (KLC-D)	A	D	E	F	G	H	J	K
Key lock in open position same keys (KLC-S)(1)	B	L	M	N	P	Q	R	S
Key lock in open position Kirk key provisions (KLA)	C	T	I	V	W	X	Y	Z

(1) Standard key for same key option is #20005. Locks for #20006–20009 are available for order as separate accessories. Note: Key lock options for Castell and Ronis/Profalux are available for order as separate accessories.

Note: Please reference embedded white paper **1SDC007115G0202** for additional information
Note: For additional information on the Emax 2 circuit breaker, please reference technical catalog **1SXU200040C0201**

Instructions for ordering

Main-gen ATO

19 –Racking lock options (first lock) and factory test report (optional)

					Code
None	X	Keylock in racked in/out – Same keys (KLP-S)(1)	Keylock in racked in/out – Different keys (KLP-D)(1)	Keylock in racked in/out – Kirk/Ronis/ Profulaux provisions (KLP-A)(1)	Keylock in racked in/out – Castell provisions (KLP-A)(2)
	–	A	B	C	D
Padlock in racked in/out position (PLP)	E	F	G	H	J
Factory test report	K	M	N	P	Q
PLP + factory test report	R	S	T	U	V

(1) Standard key for same key option is #20005. Locks for #20006–20009 are available for order as separate accessories.
(2) Two Castell adapters cannot be used at once, but can used in either position with another style of lock.

20 –Second racking lock options, mechanical operations counter (MOC) and extended warranty (optional)

					Code
None	X	Keylock in racked in/out – Same keys (KLP_S)(1)	Keylock in racked in/out – Different keys (KLP-D)(1)	Keylock in racked in/out – Kirk/Ronis/ Profulaux provisions (KLP-A)(1)	Keylock in racked out – Castell provisions (KLP-A)(2)
		B	C	D	E
Mechanical operations counter (MOC)	A	F	G	H	J
2-Year extended warranty	2	N	R	U	Y
4-Year extended warranty	4	P	S	V	Z
5-Year extended warranty	5	Q	T	W	6
Additional combinations					
MOC +2-year extended warranty	K	7	–	–	–
MOC +4-year extended warranty	L	8	–	–	–
MOC +5-year extended warranty	M	9	–	–	–

Note: For additional combinations, please contact your local ABB sales person
(1) Standard key for same key option is #20005. Locks for #20006–20009 are available for order as separate accessories.
(2) Two Castell adapters cannot be used at once, but can used in either position with another style of lock.

Note: Please reference embedded white paper **1SDC007115G0202** for additional information
Note: For additional information on the Emax 2 circuit breaker, please reference technical catalog **1SXU200040C0201**

Accessories

Order separately

Accessories

Type	U.S. code
Ekip programming T&P cable	ZEAKPPGM
Ekip programming software	**Download**
ATO license[1]	ZEAMGO

1) One ATO license per breaker pair required

Mechanical interlock[1][2] — Cables for mechanical interlock (Group 1)

Type	U.S. code
E1.2…E6.2 Type A horizontal	ZEACBLAHR
E2.2…E6.2 Type B, C, D horizontal	ZEACBLBHR
E1.2…E6.2 Type A vertical	ZEACBLAVR
E2.2…E6.2 Type B, C, D vertical	ZEA6CBLBVR

1) ABB recommends mechanically interlocking the breakers when possible as a safety precaution.
2) One type of cable must be ordered for each interlock. The cable must be ordered with the fixed circuit breaker or the cradle of a drawout circuit breaker.

Mechanical interlock — Lever for mechanical interlock of fixed circuit breaker or cradles (Group 2)[1]

Type	U.S. code
E2.2 Lever for mechanical interlock	ZE2LEV
E4.2 Lever for mechanical interlock	ZE4LEV
E6.2 Lever for mechanical interlock	ZE6LEV
E6.2 4p lever for mechanical interlock	ZE6LEV-4

1) The lever for the mechanical interlock is not required for E1.2

Mechanical interlock — Support for mechanical interlock of fixed circuit breaker (Group 3)

Type	U.S. code
E1.2 Type A – floor mounted	ZE1SPA
E1.2 Type A – wall mounted	ZE1SPAFM
E2.2…E6.2 Type A, B, D	ZEBSPB
E2.2…E6.2 Type C	ZEBSPC

Mechanical interlock — Support for mechanical interlock of cradle (Group 4)

Type	U.S. code
E1.2 Type A	ZE1SPCRDA
E2.2…E6.2 Type A, B, D	ZEBSPB
E2.2…E6.2 Type C	ZEBSPC

Pilot devices[1][2]

Type	U.S. code
2-Position; black bezel	C2SS2-10B-10
	C2SS2-10B-01
	C2SS2-10B-11
	C2SS2-10B-20
2-Position; chrome bezel	C2SS2-30B-10
	C2SS2-30B-01
	C2SS2-30B-11
	C2SS2-30B-20
3-Position; black bezel	C3SS1-10B-11
	C3SS1-10B-20
3-Position; chrome bezel	C3SS1-30B-11
	C3SS1-30B-20

1) Choose according to selector switches needed as per circuit diagrams 1SDM000009A1001
2) ABB pilot device catalog **1SFC151007C0201**

Contactors (to be mechanically interlocked)[1][2]

Type	U.S. code
AF09 2 NO/2 NC 24–60 V	AF09-22-00-11
AF09 2 NO/2 NC 48–130 V	AF09-22-00-12
AF09 2 NO/2 NC 100–250 V	AF09-22-00-13
AF09 2 NO/2 NC 250–500 V	AF09-22-00-14
Mechanical interlock AF09	VM4

1) Choose according to relays needed as per circuit diagrams **1SDM000009A1001**
2) ABB motor protection and control catalog **Motor Protection and Control**

Note: Please reference embedded white paper **1SDC007115G0202** for additional information
Note: For additional information on the Emax 2 circuit breaker, please reference technical catalog **1SXU200040C0201**

—
ABB Inc.
Electrification Business
860 Ridge Lake Blvd.
Memphis, TN 38120

abb.com/lowvoltage

© Copyright 2020 ABB. All rights reserved.
Specifications subject to change without notice.

1SXU200100G0201 3.2020