Instruction for Erection and Operation

Low-Oil-Volume Circuit-Breaker with Spring Operating Mechanism

Type SBK 7,2 mc 350,	Type SBK 7.2 n 350
Type SBK 12 mc 500,	Type SBK 12 n 500
Type SBK 12 mc 750,	Type SBK 12 n 750
Type SBK 24 mc 1000,	Type SBK 24 n 1000

Contents

BROWN BOVERI

I.1973

AG 90234 E

Printed in Switzerland

Low-Oil-Volume Circuit-Breakers, with Spring Operating Mechanism

Type SBK 7.2 mc 350,	Type SBK 7.2 n 350
Type SBK 12 mc 500,	Type SBK 12 n 500
Type SBK 12 mc 750,	Type SBK 12 n 750
Type SBK 24 mc 1000,	Type SBK 24 mc 1000

1. General

The type SBK low-oil-volume circuit-breaker with spring operating mechanism is simple, reliable and quick-acting. It is used in high for on-load circuit-breaking voltage installations as power circuit-breaker.

It is intended for indoor operation and is available for rated voltages of 7.2, 12 and 24 kV at rated currents of 1250 A and 1600 A and breaking capacities of 350, 500, 750 and 1000 MVA.

Models available

Type SBK is for fixed installation in an open cell.

Type SBKJ is intended for installation in metalclad switchgear units, It is removable and fitted with plug-in contacts.

Type SBKL is designed for open cell installation, is removable and fitted with plug-in connections.

2. Technical Data

Breaker Type		SBK 7,2 mc 350	SBK 7,2 n 350	SBK 12 mc 500	SBK 12 n 500	SBK 12 mc 750	SBK 12 n 750	SBK 24 mc1000	SBK 24 n 1000
Rated voltage	kV	6/7,2	6/7,2	10/12	10/12	10/12	10/12	20/24	20/24
Rated breaking capacity	MVA	350	350	500	500	750	750	1000	1000
Rated current	A	1250	1600	1250	1600	1250	1600	1250	1600
Rated breaking current sym.	kA	33,7/28	33,7/28	29/24	29/24	43,3/36	43,3/36	29/24	29/24
Rated making current	kA_{peak}	86/71	86/71	74/61	74/61	110/92	110/92	74/61	74/61
Short-time current (1 s)	kA	33,7	33,7	29	29	43	43	29	29
Impulse test voltage 1,2/50 us	kV_{peak}	75	75	75	75	75	75	125	125
Power frequency test voltage 50 c/s 1 min	kV	35	35	35	35	35	35	55	55

3. Construction

a) Breaker Pole

Each breaker has its own interrupter chamber.
All three poles of a triple-pole breaker are arranged vertically and are mounted on supports 48a and 48b in Fig. 1.

The interrupter chamber cylinder 12 (Fig. 1 and 7) carries the breaker pole and is made of glassfiber-reinforced epoxy resin. It also carries the connecting flanges 12 n and 12 l (Fig. 1) which, on the one hand, connect the current flow path from the pole to the busbars and, on the other, permit assembly of the breaker pole to the operating mechanism through the moulded resin rod insulators 11. The operating mechanism housing 19 is fixed to the lower connecting flange 12 l (Fig. 1). This houses the parts required for operating the switch rod, the switch rod itself 18 (Fig. 7d), the roller contact 17g (Fig. 7b) and the guide tube 20. The switch rod has a replaceable tip at the upper end 18a (Fig. 7d). It is somewhat tapered at the lower end and is damped by the oil-filled guide tube 20 as the circuit is broken. The guide tube also serves as oil drain plug. The roller contact 17g is following, low-friction type contact which guarantees a constant current flow from the lower connecting flange 12 l through the mechanism housing 19 to the switch rod 18 (Fig. 7d). The contact retainer 13 is situated on the upper connecting flange 12 n (Fig. 1). It carries the static contact which consists of several fingers in the shape of a tulip 14c. The upper connection forms the pressure equalising chamber 15 (Fig. 1 and 7d) which is fitted with an oil level inspection window 15c (Fig. 2, 3 and 7d) and an oil separator 16.

The breaker can be fitted with three primary relays as shown in Fig. 3. The construction is such that all necessary inspections and maintenance of the interrupter chamber can be carried out without removing the relays.

b) Operating Mechanism

The circuit-breaker is fitted with a spring operating mechanism which, apart from the normal open-close cycle, also allows for open-close-open auto-reclosing cycles when used in conjunction with a reclosing relay. The operating mechanism can be preloaded either by hand or with a motor. It consists of the following sub-assemblies:

The control unit 31 (Fig. 9) with mechanical and electrical trip mechanism; interlock 24 (Fig. 9) and tensioning device; spring operator 27 d-g (Fig. 6 and 8) for opening and closing the circuit; the hand and motor-driven preloading mechanism 25 / 30 (Fig. 6) with ratchet an pawl; differantial gearing and chain 21n (Fig. 6 and 8) for loading the energy store; drive shaft with cams 21d; auxiliary switch 29 (Fig. 6); indicator and terminal strip 52 (Fig.6); additional "On" spring 28u, 28v (Fig.9).

4. Principle

Fig. 7d shows a breaker pole in the open operation. The active part of the pole is submerged in oil. When the circuit is opened, the switch rod 18 (Fig. 7d) is withdrawn very rapidly from the quenching chamber. Arcing occurs between the moving contact and the tulip shaped fixed contact 14c (Fig. 7) which evaporates some of the oil. The quenching chamber 12 and 19 is divided into cells which ensure that the gas bubbles cannot expand and that the evaporation surface is confined to the immediate vicinity of the arc. The arc is rapidly cooled and extinguished by the generation of gas and the intensive oil flow.

The energy generated in opening the circuit is absorbed by the damping effect of the oil-filled sleeve at the end of the travel.

Important! The breaker must not be operated unless there is sufficient oil in the interrupter chamber as otherwise the quenching system can not function properly an the breaker could suffer damage on opening the circuit.

(See instruction plate on the side of the breaker which states : Do not operate without oil!)

a) Switching operation

The necessary energy for opening the breaker is provided by the spring operating mechanism 27 d-g (Fig. 6 and 9). As previously stated, the energy in the springs is sufficient for an autoreclosing cycle (open-clos-open). The springs 27 d-g exert a constant pressure upon the pinion 21z (Fig. 8) during the switching operation through the chain 21n and cam 21h (Fig. 6 and 8). The pinion is in mesh with the two bevel gears. The right-hand gear 21i (Fig. 6) is mounted on the shaft by a roller bearing and its sole purpose is for loading the springs 27 d-g by means of the motor 30 or the crank handle 25g. The left-hand bevel gear 21g transmits the torque to the drive shaft 21a (Fig. 6, 8 and 9), and the potential energy is stored by the cam 21c (Fig. 9). The breaker is opened or closed by rotating the switch shaft 28 through approximately 50° which releases the cam 21c on the drive shaft 21 (Fig. 6, 8 and 9) from the locking device, allowing it to engage with the operator 22. The power for the switch rod 18 (Fig. 7) is transmitted through the cam 21d to the switch shaft 28 and the switch rods 28h through the linkage to the switch rod 18 (Fig. 7).

b) A closing signal, given trough the push-button 31b or the magnet 32 in the control unit 31, actuates the release pawl 31a (Fig. 6 and 9) which in turn releases the retaining pawl 31h at the control unit power source (Fig. 9). This consists of a toggle joint 31d and 31e and the intermediate springs 31f which through the lever 31g downwards. The operator 22 (toggle joint) is released by the release rod 26 (Fig. 9)

The switch shaft 28 is rotated by the action of the springs 27 d-g (Fig. 8) through the main shaft 21 and the cam 21d. The switch rod 18 (Fig. 7) is moved into the "on" position with force through the lever system by this process. The breaker is now closed.

c) For switching off

The same process is repeated from the "off" button of the control unit 31.

d) Preloading the springs by hand with the cranking handle 25g (Fig. 6 and 9) requires approximately 75 turns, until the energy accumulator springs are fully loaded.

e) Preloading the springs 27 d-g with the aid of the motor.

The electric motor is controlled automatically. It is switched on by the limit switch 49 (Fig. 6) as soon as the load on the springs dips below maximum, and switched off again as soon as maximum load is reached again.

f) "Charged-Discharge" indicator

The indicator plate 27m (Fig. 8) only shows "charge" when the springs 27 d-g are loaded to the maximum. When it shows "discharged" it indicates that the spring tension is somewhere between maximum and minimum. It is dangerous to manipulate the mechanism or the contacts when the springs are

under tension. Always ensure that the springs are completely free from tension!

g) Anti-closing interlock

The control unit 31 (Fig. 9) only transmits closing signals when springs 27 d-g are adequately loaded i.e. it can cut out the signal immediately after it has been given. Closure is prevented at insufficient spring tension by the blocking device 24 (Fig. 6 and 9). This disengages the release cam 31a through a linkage. Deliberate blockage of closure for specific control purpose can be effected by the control magnets Fig. 10e which hold the release cam 31a out of engagement when the coil voltage fails.

h) Available models (to suit customers' requirements)

Electrical Control Components

a)	Closing magnet	d.c.	(Fig. 10a)
b)	Closing magnet	a.c.	(Fig. 10b)
c)	Tripping magnet (or current transformer release)	d.c./a.c.	(Fig. 10c)
d)	Second tripping magnet or current transformer release with second release magnet		(Fig. 10d)
e)	Blocking magnet to prevent closure		(Fig. 10e)
f)	No-voltage release		(Fig. 10f)

i) Electrical releases

These are available in various forms (see electrical control components above). The magnetic arrangements 10a, b, c, or d release through an electrical signal from an auxiliary supply.

The current transformer trip Fig. 10c or 10d is fed by the main and auxiliary transformer, which renders auxiliary supply unnecessary.

The no-voltage trip Fig. 10f, also known as closed-circuit trip, requires constant coil voltage.

Arbitrary remote control is blocked as shown in Fig. 10e.

5. Assembly and Operation

The breaker frame 48a/ b (Fig. 1 and 2) is bolted construction for supporting the interrupter chambers and also for fixing the complete unit (see attachment holes 47 in Fig. 1) in its various forms for outdoor installation. The power supply should be connected to the relay terminal bolts 41 (Fig. 3) or, in models without relays, to the upper terminal screws 12e (Fig. 1) and to the lower connecting screws 12m.

The wiring should be connected up in accordance with the wiring diagram packed with the breaker.

The earthing connection, which is painted yellow and located in the driving mechanism (not visible in the illustrations) should be suitably earthed in accordance with the regulations in force.

Breakers are delivered in the switched-off condition.

a) Filling with oil

Before use, all three interrupter chambers must be filled with pure transformer oil of good quality and free from water, after loosening the oil separator housing bolts 16 (Fig. 1, 2 and 7) The oil should be poured in slowly until the level reaches the red spot on the inspection window 15c (Fig. 2, 3 and 7). Each interrupter chamber requires approximately 15,6 litres of oil. The breaker should be tested for correct functioning under operating conditions. Several opening and

closing operations should be carried out and all parts inspected for positive engagement. If the results of these tests are satisfactory, the breaker may be connected to the supply and put into operation.

6. Maintenance

All mechanical parts operate with complete reliability and are not affected by dust or temperature changes under normal conditions.

Maintenance can be limited to a periodic cleaning and lubrication of the individual components, which is quite sufficient to prevent premature wear. Servicing must be carried out with the breaker in the open condition.

We recommend that the following checks and servicing be carried out:

a) Half-yearly checks

The oil level should be checked at the inspection window 15c (Fig. 2 and 7) and the oil topped up as necessary to the marked level. For filling instructions see paragraph 5a.

b) Changing the arcing contacts

The deterioration of the arcing contacts and the pollution of the oil depend to a great extent on the demands made on the breaker with respect to the breaking power and the number of switching cycles. The contacts can survive one thousend switching cycles at normal operating power (rated current). The contact life expectancy is reduced correspondingly when overloads are interrupted.

It is essential to inspect the contacts for damage after four or five short-circuit interruptions. This should be carried out as follows:

1. Drain the oil from the three interrupter chambers into a clean receptacle by removing the oil drain plug 20 (Fig. 1 and 7d)

2. After loosening the four screws 12c (Fig. 7d), lift out the complete pressure equalising chamber 15 (Fig. 1 and 7d) and the interrupter chamber 13 (Fig. 7d).

3. The replaceable contact fingers 14c (Fig. 7a) are easily accessible after removing the interrupter chamber 13 and can, if necessary, be replaced.

4. It is recommended that the individual poles of the breaker be brought into the "closed" position which gives better accessibility to the contact tip 18a (Fig. 7d). The switch rods 28h (Fig. 1 and 6) must be loosened. Under no circumstances may be brought out of adjustment. Make sure when reassembleding, that they are in exactly the same position as before.

5. The unserviceable tip 18a can be removed with an Allen key and replaced by a new one.

c) General overhaul

After draining the oil from the interrupter chambers, and apart from the work described under 6b, the four screws 12d (Fig. 1 and 7d) must also be loosened. This permits withdrawal of the active part of the pole, together with the switch rod 18, which can then be disassembled into its various component parts as shown in Fig. 7b, c and d. The reverse procedure is adopted for reassembly.

The quenching oil should also be checked the more frequently the more often the breaker operates, and if it is found to be very polluted it should be changed. The insulating capacity of the oil is best tested in an oil testing apparatus.

The oil sample is allowed to stand for about half an hour before being subjected to the test voltage. If, at a distance of 5 mm with 12,5 mm diameter spheres, the oil breaks down below 10 to 15 kV, then it should be changed. The breakdown voltage of the fresh oil must be at least 40 kV.

d) Lubrication

The switching mechanism should be lubricated once a year, or after every 1000 switching cycles, with graphite lubricating oil type BBC 909 LM 2g or Molycote Paste Rapid. The operating mechanism in the interrupter chamber needs no lubrication as it is constantly submerged in oil. All lubricating holes marked red (on the control unit 31), as well as all joints, shaft bearings, ball bearings and gear wheels should be lubricated with the previously mentioned lubricant according to lubrication chart Fig. 11.

The graphite lubricating oil BBC 909 LM 2g is a mineral oil with the following characteristics:

Viscosity at 20° C	30 - 60 centistokes
Neutralization number	0.2
Flash-point (Marcusson)	140° C
Ash content (incombustible material)	0.01 %

This oil must be carefully mixed with 5 % by weight of colloidal graphite.

7. Spare Parts

We recommend that adequate supplies of the following spare parts be carried in stock as they are subject to wear and tear or could conceivably become damaged. Considerable delays can be avoided by carrying this small stock of spares. Spare parts should be ordered from our appointed agents quoting the following details:

1. Equipment for which the spare parts are required

2. Its type designation and

3. Works serial number.

   The data should be carefully noted from the identification plate.

4. Quantity required

   Description

   Item numbers of the desired spare parts (if quoted in the prevent instruction)

Note:

The information required under 1, 2 and 3 must be quoted even if the order is accompanied by a sample, as otherwise it is not possible to establish the exact type of apparatus. We further request that the type designation and works serial number be quoted in any correspondence associated with spare parts.

	SBK 7,2 mc 350 SBK 12 mc 500 SBK 12 mc 750 SBK 24 mc 1000			SBK 7,2 n 350 SBK 12 n 500 SBK 12 n 750 SBK 24 n 1000		
a) For the breaker pole	Item	Piece	Fig.	Item	Piece	Fig.
Arcing finger	14c1	8	7a	14c2	8	7a
Arcing finger spring	14b	8	7a	14b	8	7a
Contact tip	18a	1	7d	18a	1	7d
Switch rod complete	18	1	7d	18	1	7d
Roller contact complete	17	1	7b	17	1	7b
Interrupter chamber complete	12	1	7d	12	1	7d
Sealing ring	19k	1	7c	19k	1	7c
" "	15b	1	7a	15b	1	7a
" "	14a	1	7a	14a	1	7a
" "	13a	3	7a	13a	3	7a
Seal	20a	1	7a	20a	1	7a
"	16a	1	7a	16a	1	7a
"	19h	1	7c	19h	1	7c
b) For spring operating mechanism						
Magnet coil "ON"	32	1	10a/b	32	1	10a/b
Magnet coil "OFF"	32	1	10c	32	1	10c
Tension spring	23f	2	8	23f	2	8
Motor	30	1	9	30	1	9

Captions to Illustrations

Fig. 1 Low-oil-volume circuit-breaker type SBK 12 mc 500 with spring operating mechanism, viewed from the interrupter chamber side.

Fig. 2 Low-oil-volume circuit-breaker type SBK 12 mc 500 with spring operating mechanism, viewed from the mechanism side.

Fig. 3 Type SBK 12 mc 500, fitted with three primary relays type HB, viewed from the mechanism side.

Fig. 4 Low-oil-volume circuit breaker type SBKJ 12 mc 500 mounted on a trolley for metalclad installation, viewed from the interruptor chamber side.

Fig. 5 Type SBKJ 12 mc 500 circuit-breaker, viewed from the mechanism side.

Fig. 6 Spring operating mechanism for low-oil-volume circuit-breaker type SBK 12 mc.

Fig. 7a,b c & d Assembly diagrams of interrupter chamber of one pole of a type SBK 12 mc 500 circuit-breaker.

Fig. 8 Dismantled main parts of the spring actuating mechanism.

Fig. 9 Diagrammatic view of spring operating mechanism, spring under tension. Breaker in "OFF" position.

Fig. 10 Coils in control unit.

Fig. 10a Closing magnet (d.c.)

Fig. 10b Closing magnet (a.c.)

Fig. 10c Tripping magnet (a.c. / d.c.)
(or current-transformer trip)

Fig. 10d Second tripping magnet or current-transformer trip with second trip magnet.

Fig. 10e Blocking magnet for switch interlocking.

Fig. 10f No-voltage trip

Fig. 11 Lubrication chart

Component Parts

10	Trolley
11	Suporting insulator
12	Quenching chamber, complete
12a	Washer
12b	Spring washer
12c	Screw
12d	Screw
12e	Upper Connection screw
12f	Washer
12g	Spring washer
12h	Clamping plate
12i	Screw
12k	Screw
12l	Lower connecting flange
12m	Lower connection bolt
12n	Upper connection flange
13	Contact holder complete
13a	Sealing ring
13b	Retaining ring

13c	Steel ball	
13d	Screw	
13e	Spring washer	
13f	Washer	
14	Retainer for contact fingers complete	
14a	Sealing ring	
14b	Spring	
14c	Replaceable contact fingers	14c/1 for 1250 A 14c/2 for 1600 A
15	Pressure equalizing chamber complete	
15a	Retaining ring	
15b	Sealing ring	
15c	Inspection window (oil level gauge)	
15d	Ring	
15e	Oil level graduations	
16	Oil separator complete	
16a	Seal	
17	Roller contact complete	
17a	Conducting stud	
17b	Plate	
17c	Plate	
17d	Washer	
17e	Nut	
17f	Nut	
17g	Roller complete	
17h	Angle piece	
17i	Screw	

18	Switch rod complete	18/1 for 1250 A 18/2 for 1600 A
18a	Contact tip	
18b	Pressure ring	
18c	Switch rod with guide	
19	Mechanism housing complete	
19a	Switch lever complete	
19b	Split pin	
19c	Pin	
19d	Washer	
19e	Fulcrum pin	
19f	Locking key	
19g	Retaining ring	
19h	Seal	
19i	Threaded bush	
19k	Sealing ring	
19l	Lever complete	
19m	Retaining ring	
19n	Spring ring	
20	Guide tube complete (oil drain screw)	
20a	Seal	
21	Drive shaft complete	
21a	Drive shaft	
21b	Key	
21c	Cam	
21d	Cam disc complete	
21e	Split pin	

21f	Loading shaft
21g	Bevel gear
21h	Sprocket complete
21i	Bevel gear complete
21k	Bush
21l	Spring ring
21m	Clip
21n	Roller chain
21o	Split link
21p	Ball bearing
21q	Ball bearing
21r	Screw
21s	Nut
21t	Spring washer
21u	Retaining ring
21v	Washer
21w	Castle nut
21x	Split pin
21y	Washer
21z	Pinion
22	Lock complete
22a	Link left
22b	Link right
22c	Link
22d	Lever
22e	Pin
22f	Pin

22g	Pin
22h	Pin
22i	Roller
22k	Spacer tube
22l	Spacer tube
22m	Spacer ring
22n	Stop
22o	Tension spring
22p	Washer
22q	Retaining ring
22r	Retaining ring
23	Gearing complete
23a	Gear shaft
23b	Bevel pinion
23c	Bush
23d	Spacer bolt
23e	Peg
23f	Tension spring
23g	Nut
23h	Spring washer
23i	Locking pin
23k	Retaining ring
23l	Damper
24	Interlock complete
24a	Interlock shaft
24b	Spring washer

24c	Indicator rod
24d	Blocking rod
24e	Interlock rod
24f	Guide
24g	Nut
24h	Spring ring
24i	Retaining ring
24n	Spring ring
25	Hand crank complete
25a	Bearing bracket complete
25b	Shaft
25c	Bush
25d	Bush
25e	Angle bracket
25f	Stop
25g	Crank handle
25h	Sleeve
25i	Angle bracket
25k	Locking pin
25l	Locking pin
25m	Cyl. pressure spring
25n	Bevel gear wheel
25p	Cyl. pressure spring
25q	Bush
25r	Retaining ring
25s	Retaining ring
25t	Retaining ring
25u	Retaining ring

25v	Washer
25w	Split pin
25x	Nut
26	Release mechanism complete
26a	Release rod
26b	Release lever
26c	Right pin
26d	Sleeve
26e	Shaft
26f	Washer
26g	Split pin
27	Spring frame (with power storage mechanism)
27a	Spring frame
27b	Pulley
27c	Shaft
27d	Compression spring
27e	Compression spring
27f	Compression spring
27g	Compression spring
27h	Spring plate
27i	Chain retainer
27k	Shaft
27l	Top plate
27m	Indicator plate (Charged-Discharged)
27n	Indicator plate (I - O)
27o	Indicator rod
27p	Screw
27q	Nut
27r	Nut

27s	Spring washer
27t	Retaining ring
28	Switch rod
28a	Switch rod complete
28b	Bush complete
28c	Bearing bush
28d	Washer
28e	Shaft
28f	Cam
28g	Diaphragm
28h	Switch rod
28i	Adjusting bush
28k	Washer
28l	Ball bearing
28m	Cheese-head screw
28n	Peg
28o	Peg
28p	Retaining ring
28q	Washer
28r	Spring washer
28s	Spring ring
28t	Washer
28u	Additional "ON" spring
28v	Pull-rod
28w	Washer
28x	Split pin
29	Auxiliary switch

30	Motor
31	Control unit complete
31a	Release pawl
31b	Push-button "ON"
31c	Push-button "OFF"
31d	Toggle joint
31e	Toggle joint
31f	Compression spring in the control unit
31g	Lever
31h	Retaining pawl
32	Tripping coil
33	Coil
34	Armature
34a	Armature with short-circuit ring
35	Magnet armature
35a	Tension spring
36	Magnet Armature
36a	Tension spring
38	Loading cam in the control unit
39	Relay loading cam
40	Cam for actuating the no-voltage trip magnet
41	Main power connection for use with primary relays
42	Primary relays, series relays, Type HB
43	Primary relays, thermal relays Type HT
44	Relay - release rodding
45	Relay - release rodding

46	Relay - release shaft
47	Fixing holes
48a	Upper support
48b	Lower support
49	Limit switch
50	Inspection cover
51	Alarm contact re-set
52	Terminal strip
53	Partition
54	Front housing
55	Roller
56	Tulip contact

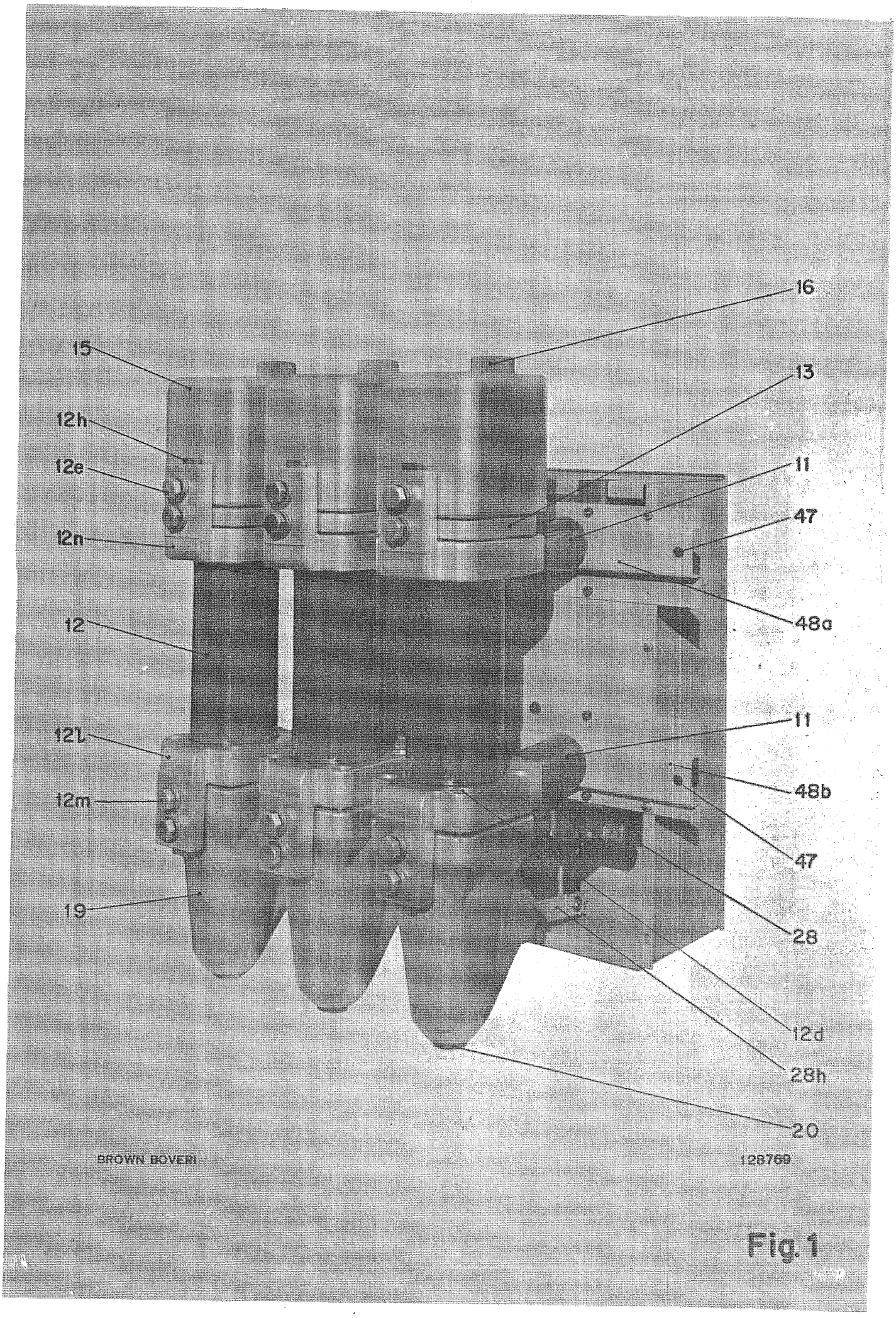
16
15
13
12h
11
12e
47
12n
48a
12
11
12L
48b
12m
47
19
28
12d
28h
20
BROWN BOVERI
128769

Fig. 1

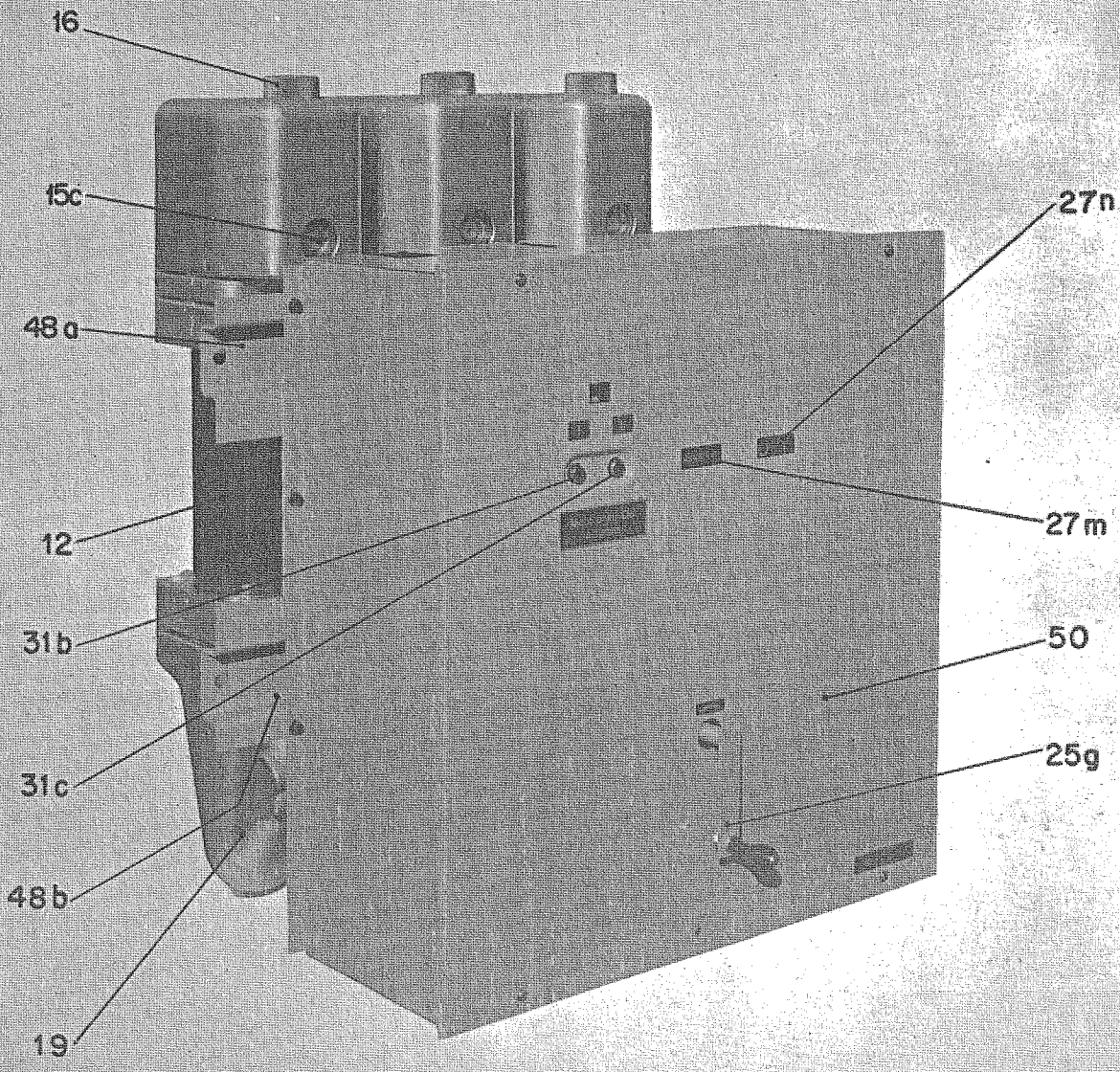

BROWN BOVERI

128770

Fig. 2

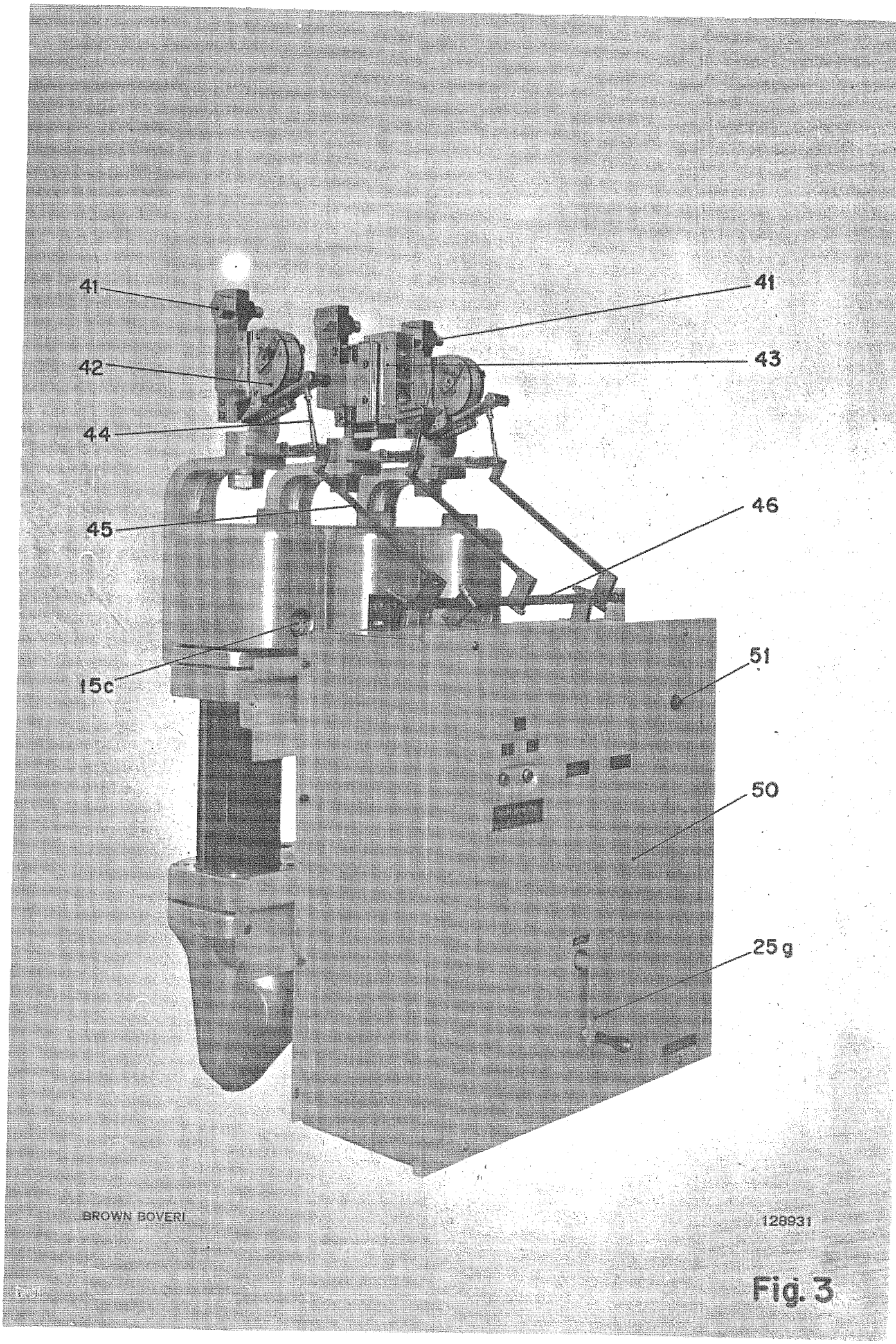

Fig. 3

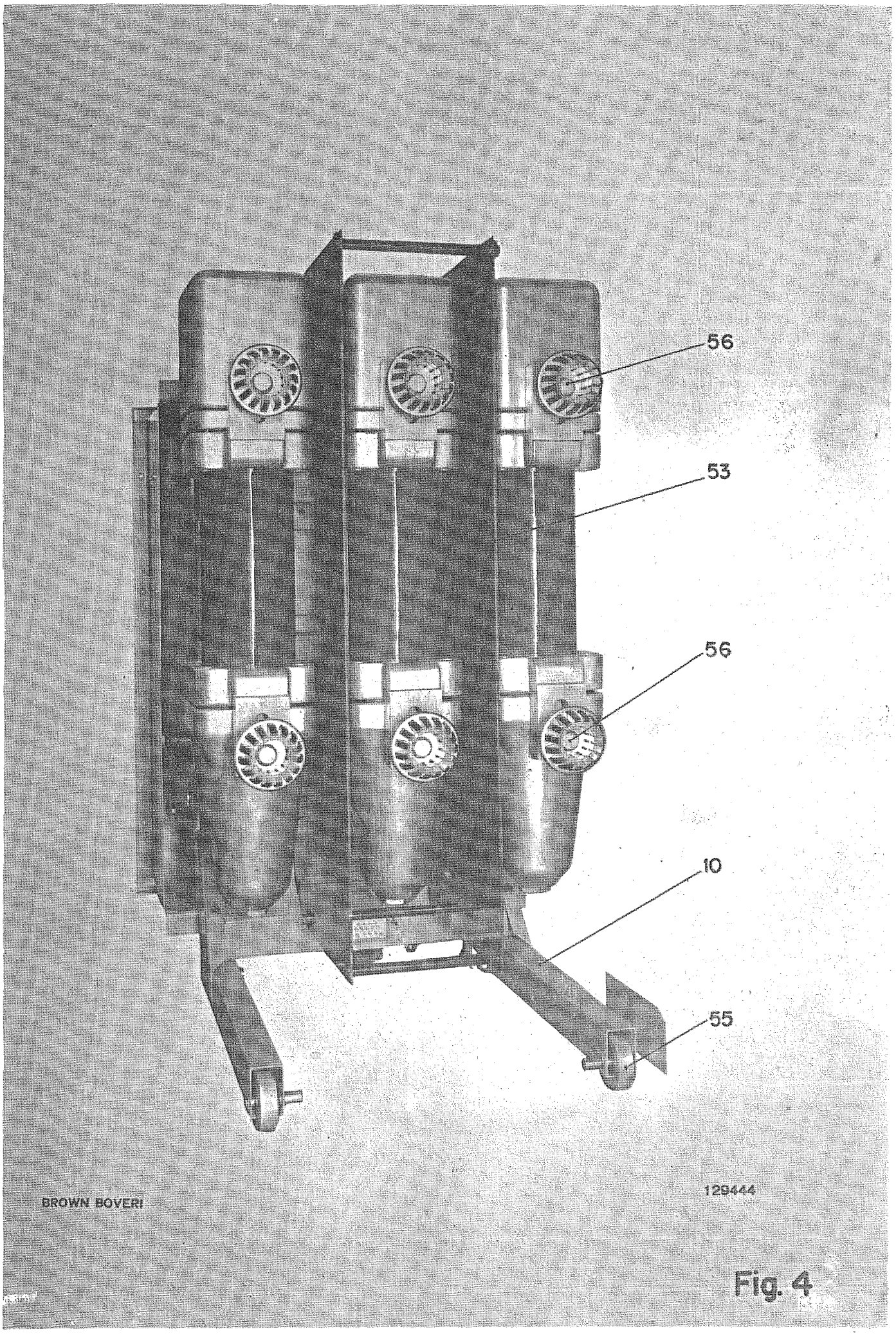

Fig. 4

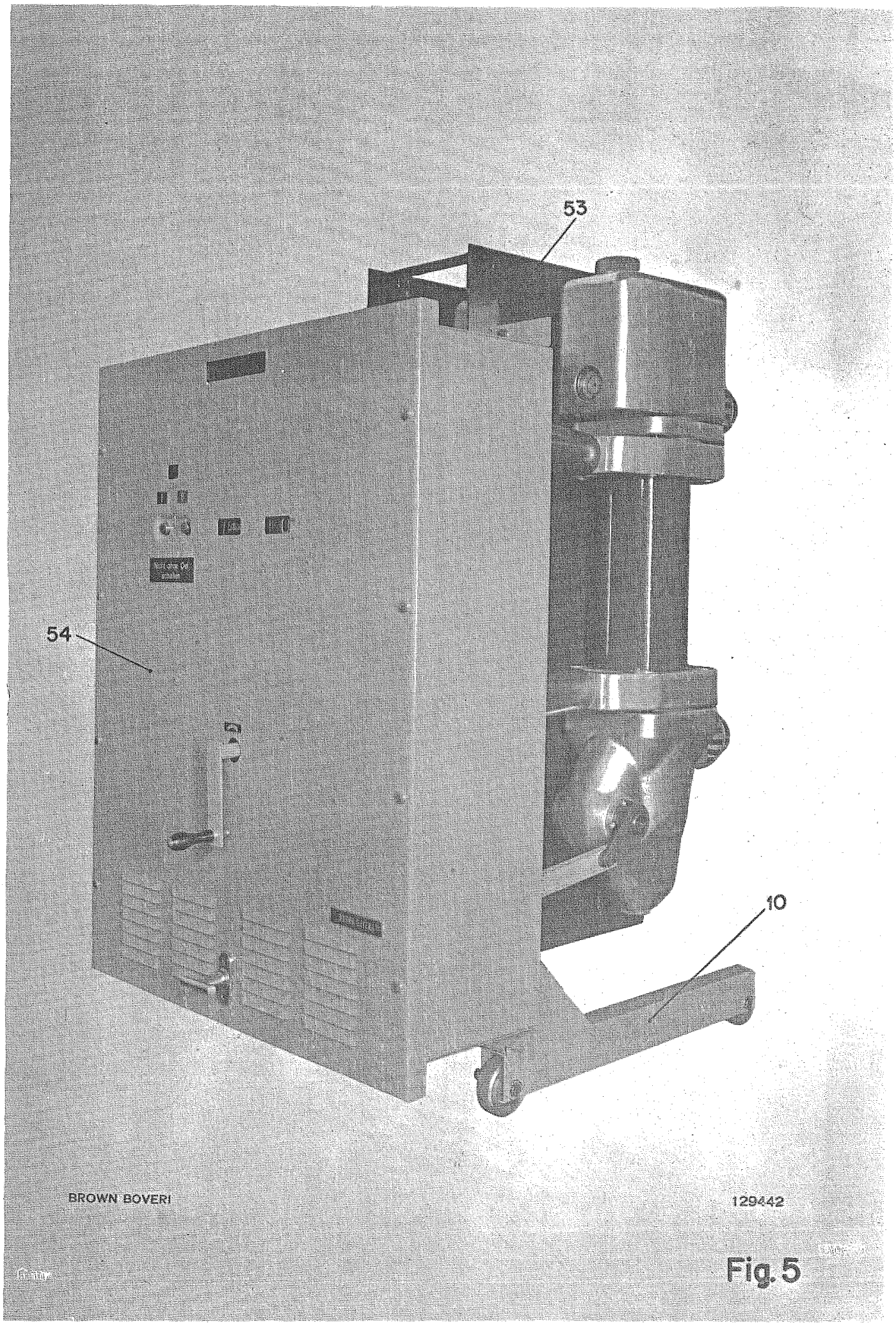

Fig. 5

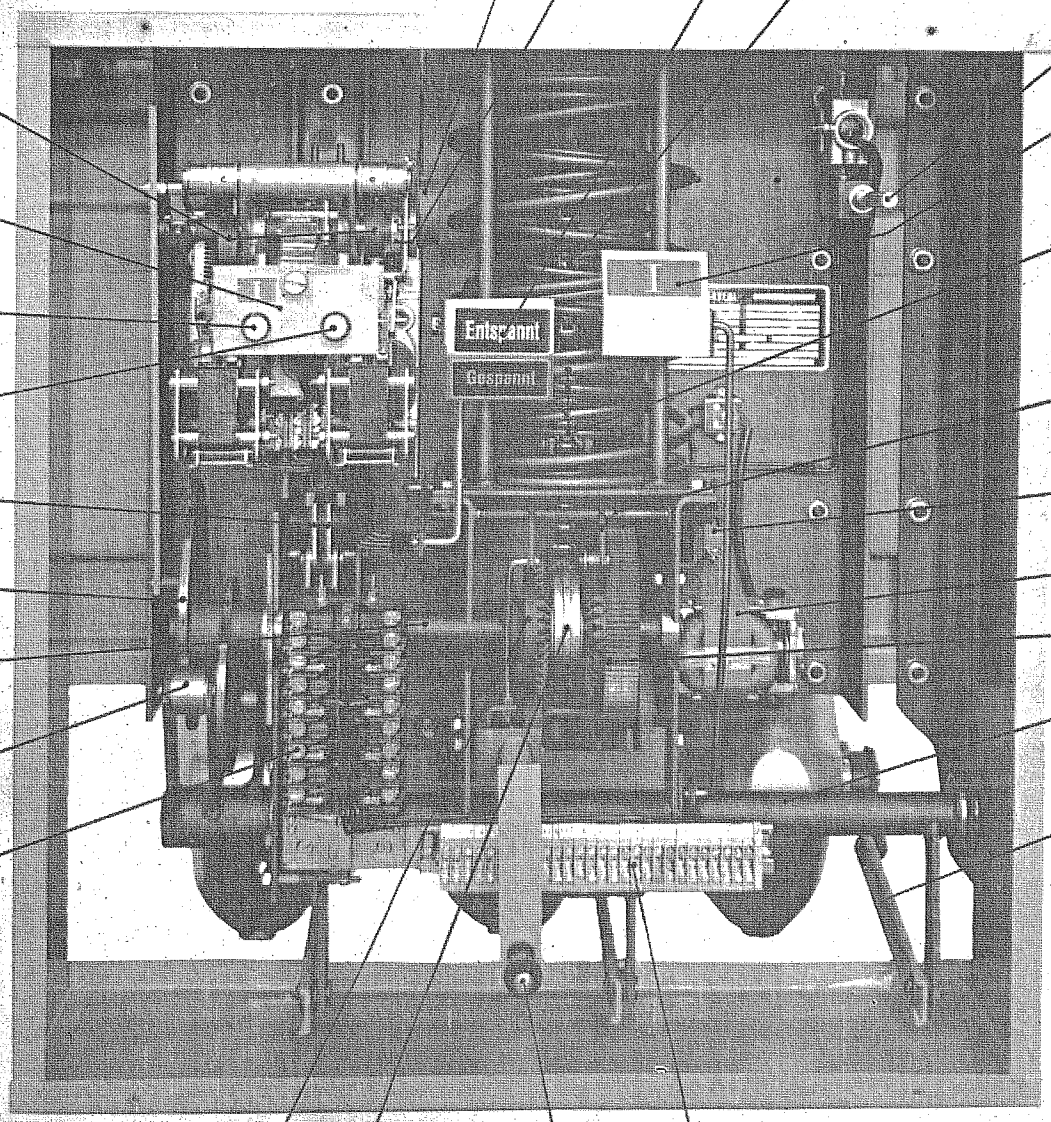

BROWN BOVERI

128934

Fig. 6

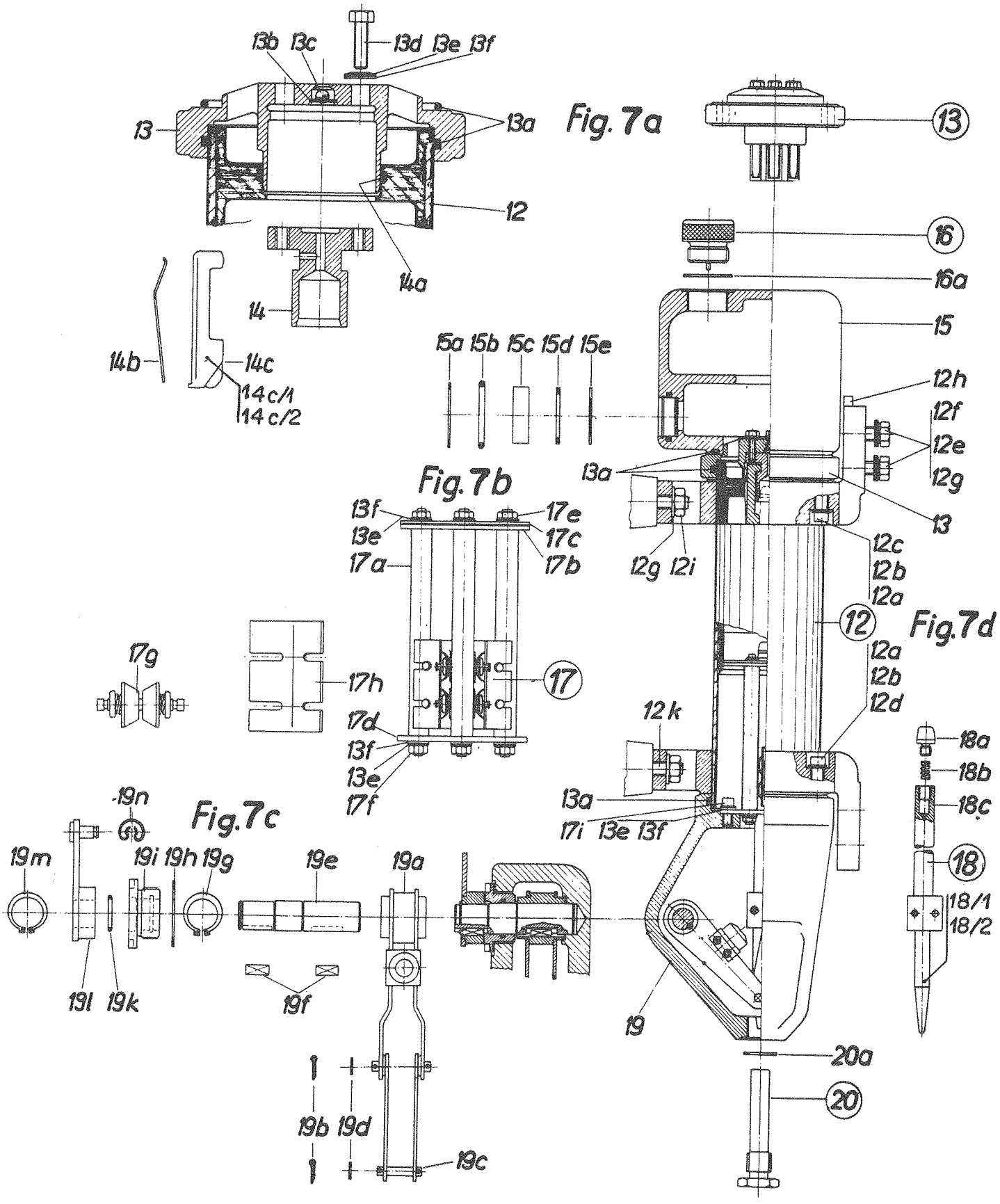

AG 90234

Fig. 7

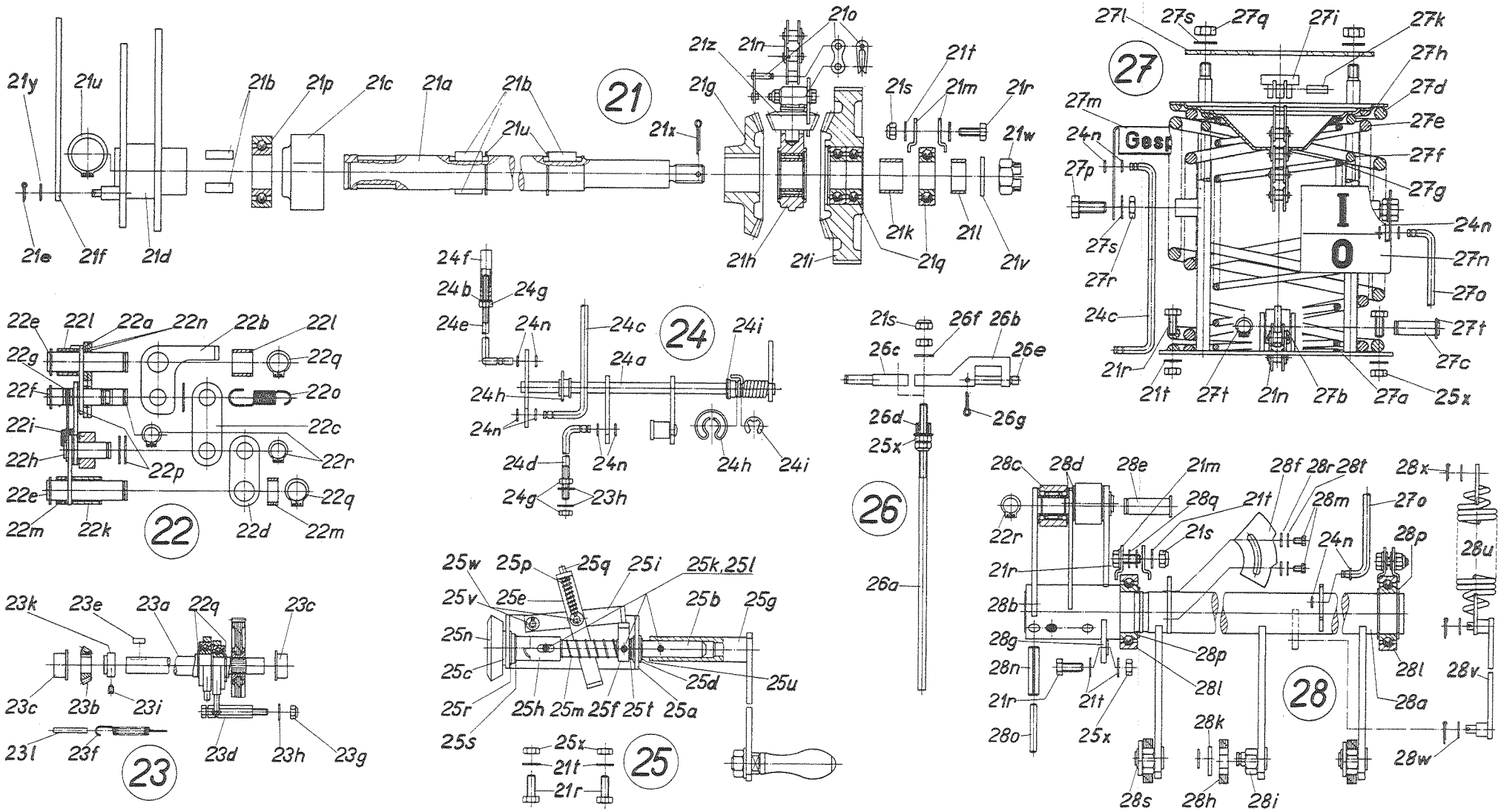

Fig. 8

BV-AG 90234/242/244

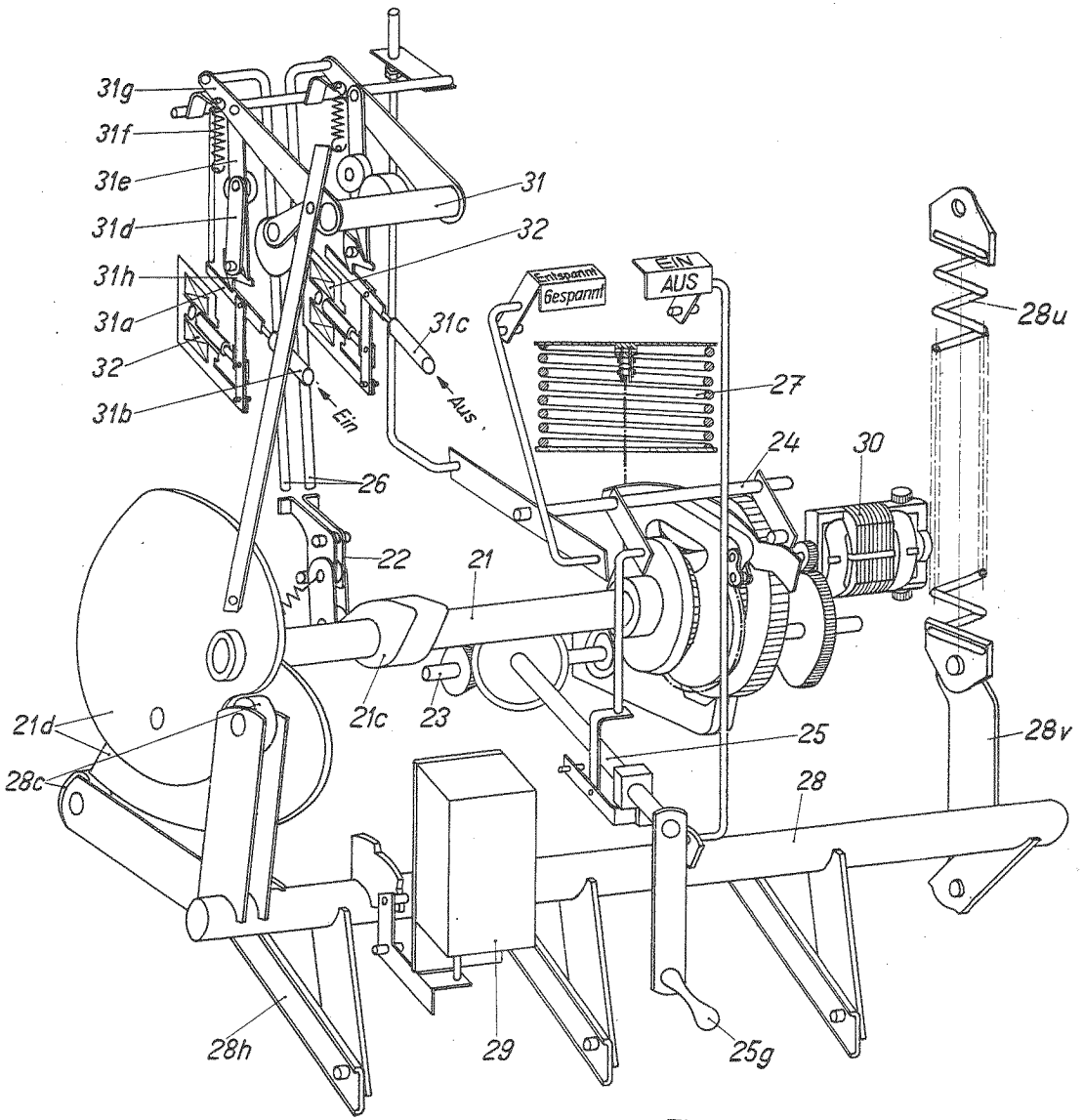

Fig. 9

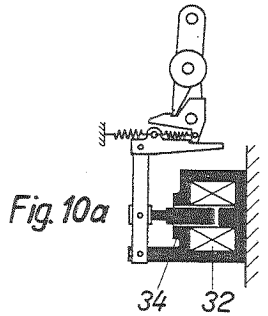

Fig. 10a

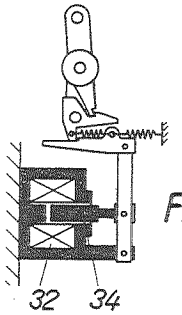

Fig. 10c

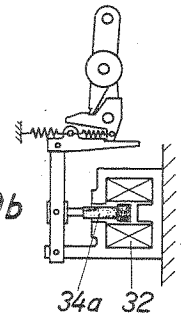

Fig. 10b

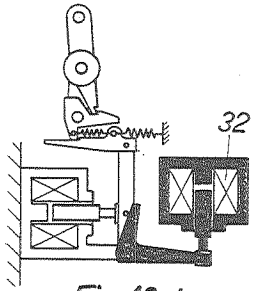

Fig. 10d

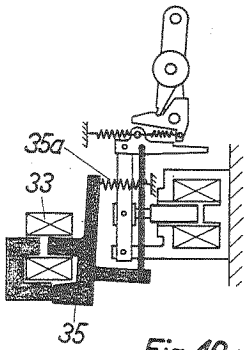

Fig. 10e

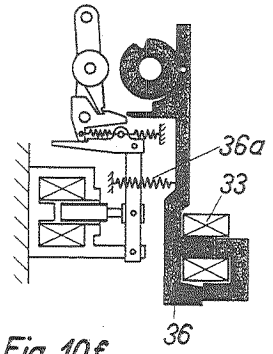

Fig. 10f

AG 90234/242/244 Fig. 10

Lubricating chart for SBK

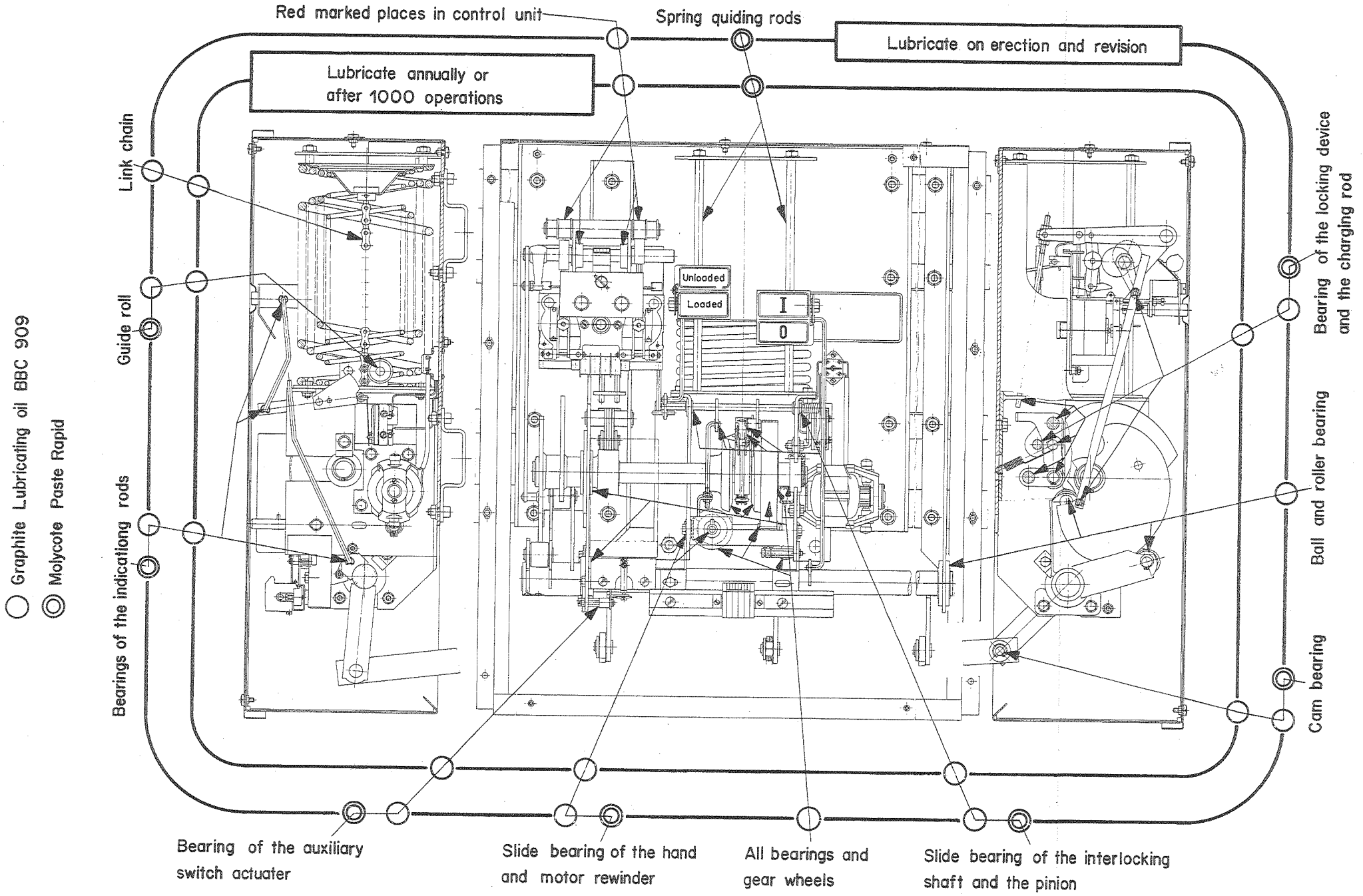

BV-AG 90234/242/244
AG 332842

Fig.11