Technical instruction
ACS250 micro drives, 110-480 V
Remote push button speed control

Overview

For some applications it can be preferable to control the speed of a motor by increasing and decreasing speed using push button controls mounted on a control panel or operator station, sometimes referred to as digital potentiometer speed control. This techincal instruction describes two examples of how this can be implemented on the ACS250.

Solution one wiring diagram

The following circuit uses a standard single pole switch for start and stop control with momentary push buttons to increase and decrease speed.

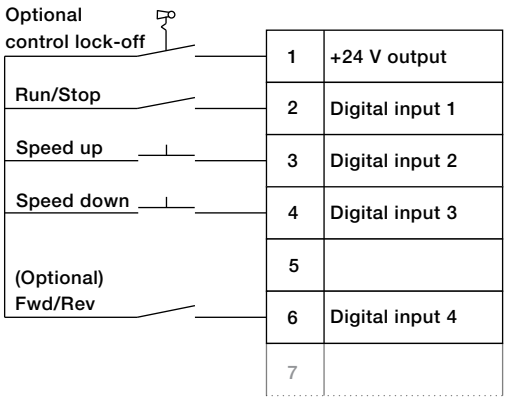

Solution one operation

The optional lock-off provides a useful feature which stops operation of all of the other input functions and prevents operation of the drive when in the open position. It could be provided as a key switch or a lock-off on the control panel. The start mode for the drive is set to edge triggered so that the start input must always be applied after the control lock-off is disabled (closed). This input should not be used as a safety related input for the application. In the event of any safety related issues the drive should be fully isolated from the mains supply.

The run/stop input provides a run command to the drive when the switch is in the closed position and a stop when the switch is open.

The speed up and speed down are momentary push buttons that are held in to increase or decrease the speed reference to the drive.

The fwd/rev switch is optional depending on whether bi-directional (forward and reverse) motor rotation is required. The drive operates in the forward direction when the switch is open and reverses when the switch closes.

Solution one parameter set up

The drive should be defaulted back to factory settings prior to set up. The following parameters are set within the drive to activate the functionality shown in the control diagram. Check all parameters have been set correctly prior to enabling the drive.

Parameter changes

Par	Description	Value	Notes
1103	Primary command source	1	
1100	Keypad mode restart function	2 or 3	Settings 2 and 3 allow the drive to be started from the control terminals directly and implement the functionality shown in the control diagram. Setting 2 causes the drive to always start at the minimum frequency (2007). Setting 3 causes the drive to always start at the last operating frequency.

Solution two wiring diagram

The following circuit uses a standard momentary switch for both start and stop control and for the push buttons to increase and decrease speed. The start push button has two separate normally open contacts.

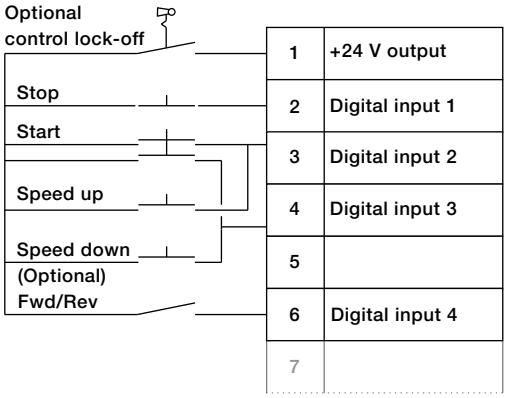

Solution two operation

Full detail of the optional lock-off is provided in solution one operation description.

The stop input is a normally closed momentary switch that provides a stop command to the drive when opened. The drive will stop when this switch is activated (opened) and will prevent the drive starting. The switch is a normally closed configuration to help protect against wire break in the control circuitry.

The start input is a normally open momentary switch that provides a start command to the drive (by operating the speed up and speed down inputs simultaneously). The run input is latched so that the switch can be released once the drive is started and will continue to run until overwritten by a stop input.

The speed up and speed down are momentary push buttons that are held in to increase or decrease the speed reference to the drive.

The fwd/rev switch is optional depending on whether bi-directional (forward and reverse) motor rotation is required. The drive operates in the forward direction when the switch is open and reverses when the switch closes.

Note that parameters 1100 and 2007 are located in the long parameter group (“Par L”).

Solution two parameter set up

The drive should be defaulted back to factory settings prior to set up. The following parameters are set within the drive to activate the functionality shown in the control diagram. Check all parameters have been set correctly prior to enabling the drive.

Parameter changes

Par	Description	Value	Notes
1103	Primary command source	1	
1100	Keypad mode restart function	0 or 1	Settings 0 and 1 allow the drive to be started from the control terminals directly or from the keypad and implement the functionality shown in the control diagram. Setting 0 causes the drive to always start at the minimum frequency (2007). Setting 1 causes the drive to always start at the last operating frequency.

Notes on remote push button speed control

The rate of change of the set point is preset within the drive to match the ramp rates set in 2202 (acceleration ramp) and 2203 (deceleration ramp) and cannot be adjusted independently. Therefore, as the ramp rate parameters are increased/decreased, the rate of change of the motor set point is correspondingly altered. The frequency shown on the drive display should match closely the drive output speed to the motor at any given time.

The momentary push buttons for increasing and decreasing the speed set point are mirrored by the up and down push buttons on the drive keypad. The stop/start keypad buttons are also active and can be used to start or stop the drive directly.

If both speed set point push buttons (increase and decrease) are operated simultaneously then the decrease speed button will override the functionality of the increase speed push button and the speed set point will decrease.

For more information please contact your local ABB representative or visit:

www.abb.com/drives

3AUA0000156964 REV A EN 6.5.2015

Power and productivity
for a better world™