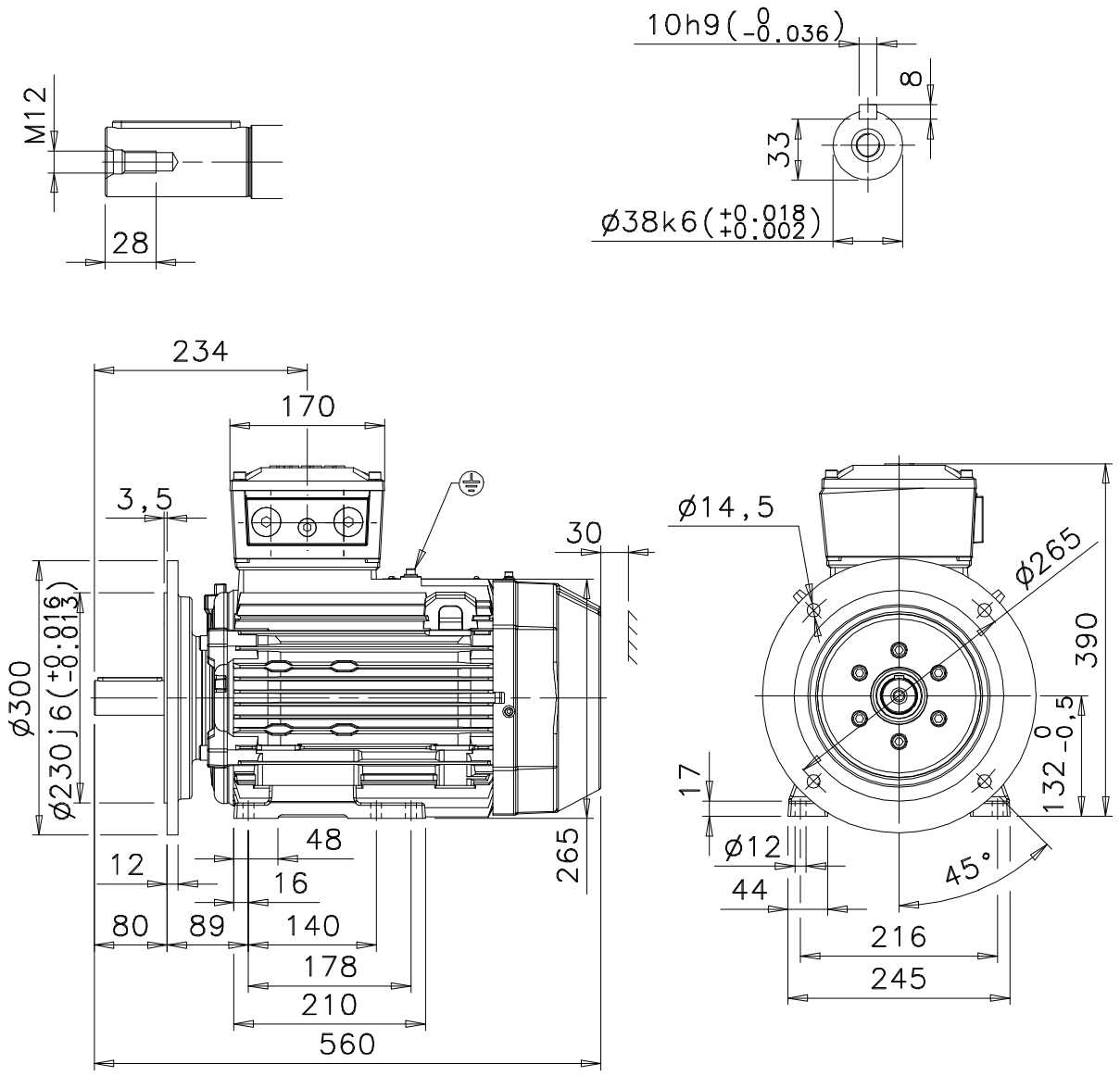


Additional information:

| | | |
|---|---|---|
| **Dimension Print** | Motor Type: M3JP 132SM_2-8, B35, V36, FF265 | Document No: 3GZF500213-73 A<br>13 JP 132 A |
| Description: STANDARD SQUIRREL CAGE MOTOR | | |

| | | | | |
|---|---|---|---|---|
| Unit: | ABB Oy, Motors and Generators | Issued by: | R.Ketonen | Replaces: |
| Date: | 07.02.2011 | Approved by: | P.Viitanen | Replaced by: |

| | | |
|---|---|---|
| **ABB Oy** | Customer Reference: | ABB |