(ESTIMATING ONLY)

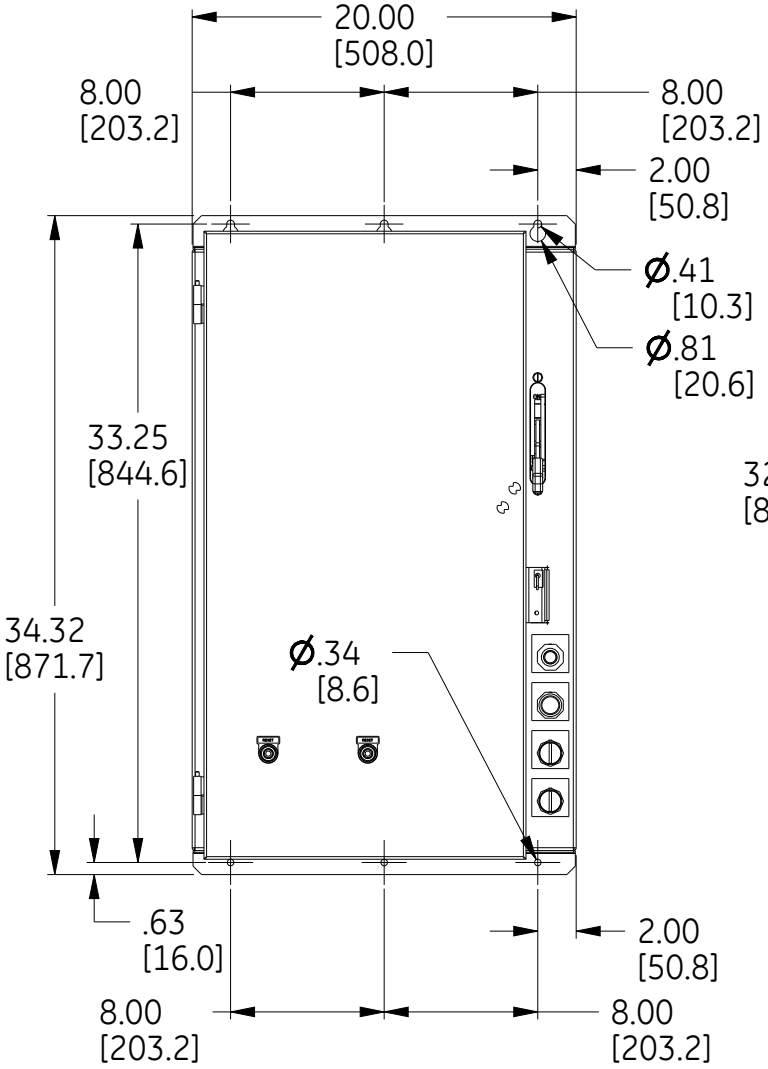

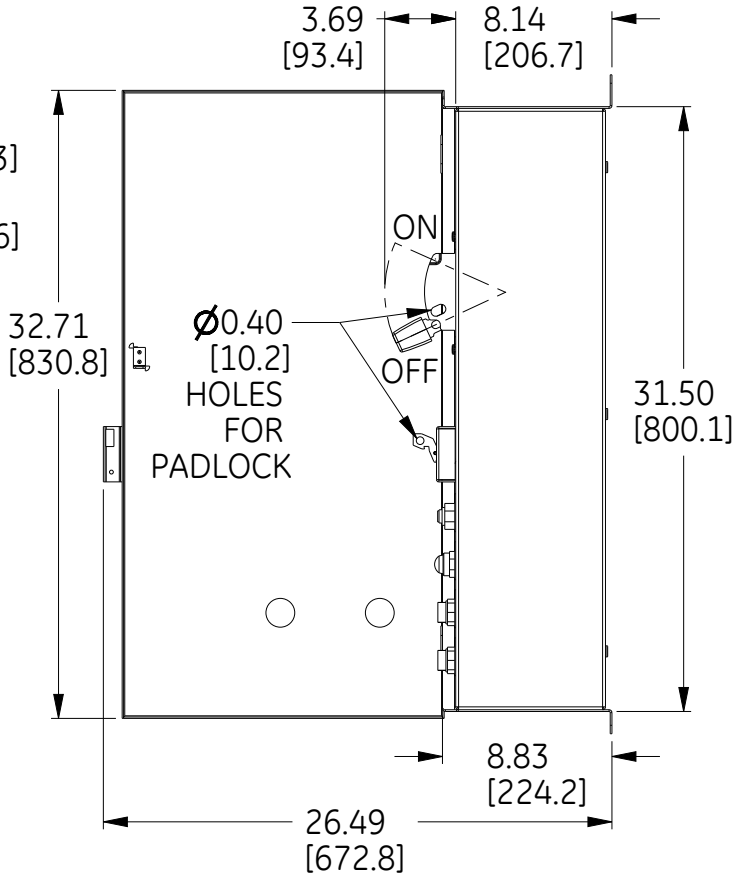

DOOR OPEN 90°

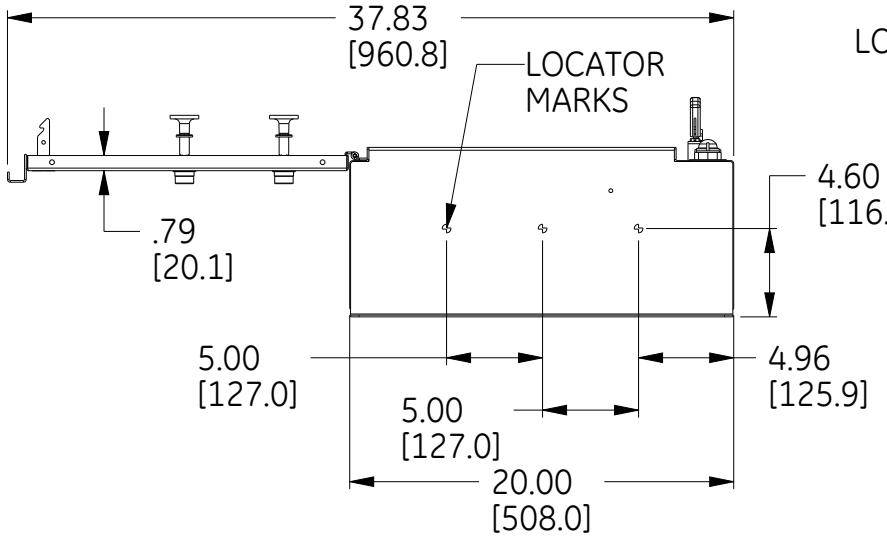

BOTTOM VIEW
DOOR OPEN 180°

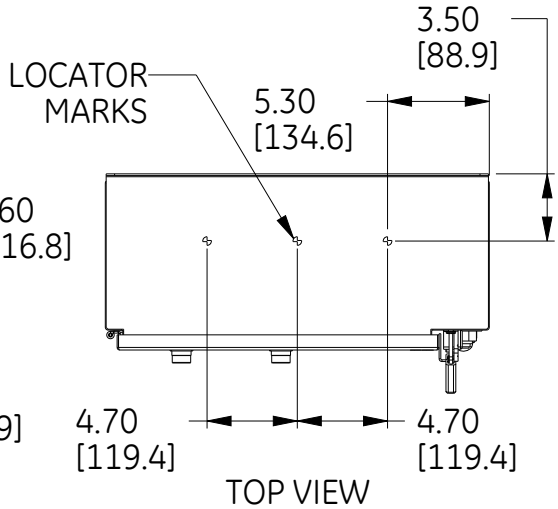

TOP VIEW

ABB NUMBER: 1SQC912026D0201

ABB

OUTLINE - COMBINATION STARTER
SIZE 3-4 TYPE 1/3R/12

DUAL DIMENSIONS : INCH [MILLIMETER]

THIRD ANGLE	SHEET#	DWG NO.	DATE	REV
	1 of 1	270A7244P1	16-Mar-21	1