Top View

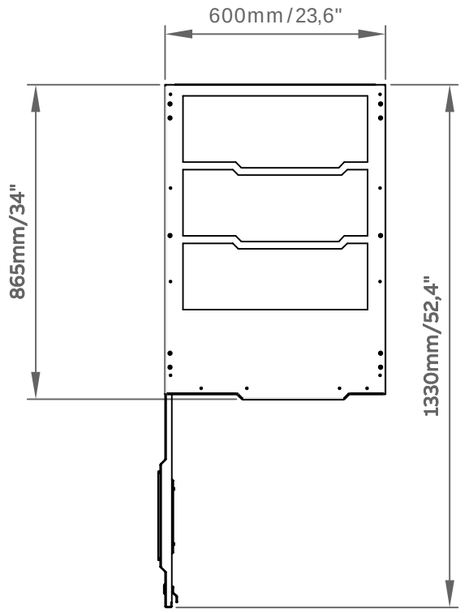

Front View

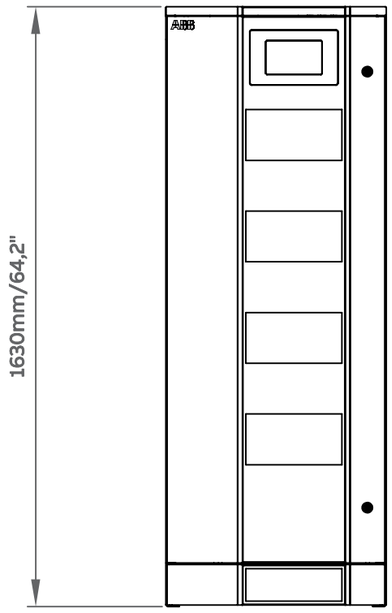

Side View

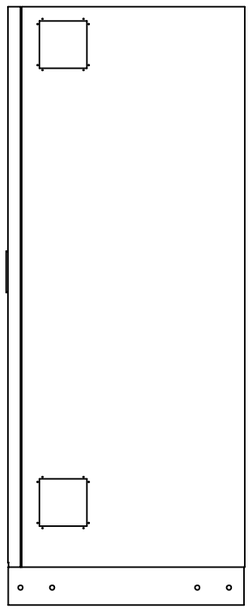

HEAT REJECTION IN DOUBLE CONVERSION OPERATING MODE AT 1.0pF LOAD, NOMINAL VOLTAGE / FREQUENCY, ENERGY STORAGE DISCONNECTED.		100% LOAD	WEIGHT: lbs	FLOOR LOAD lbs/sq ft
40 kW	BTU/hr	6142	740	133
	kW	1.800		
50 kW	BTU/hr	7677	740	133
	kW	2.250		
80 kW	BTU/hr	12011	895	160
	kW	3.520		
100 kW	BTU/hr	15355	895	160
	kW	4.500		
120 kW	BTU/hr	18426	1050	188
	kW	5.400		
150 kW	BTU/hr	23544	1050	188
	kW	6.900		
HEAT REJECTION IN eBOOST OPERATING MODE @ 1.0 pF LOAD, NOMINAL VOLTAGE / FREQUENCY, ENERGY STORAGE DISCONNECTED.		**100% LOAD**	**WEIGHT: lbs**	**FLOOR LOAD lbs/sq ft**
40 kW	BTU/hr	1911	740	133
	kW	1.800		
50 kW	BTU/hr	2047	740	133
	kW	2.250		
80 kW	BTU/hr	12011	895	160
	kW	3.520		
100 kW	BTU/hr	15355	895	160
	kW	4.500		
120 kW	BTU/hr	18426	1050	188
	kW	5.400		
150 kW	BTU/hr	23544	1050	188
	kW	6.900		

1. Dimensions are in inch;
2. UPS Operating Temperature 32° F–104°F
3. 18" minimum clearance required above the unit for heat rejection
4. Front access for service and maintenance
5. Do not tilt the UPS more than 10°

			Draw	Barbarani R.	20.04.21
			Checked	Balbiano C.	20.04.20
ECN		Name	Revision	1	3.12.14

ABB Electrification Products Industrial Solution

Power Protection
6572–Quartino, Switzerland

Mechanical Outline

TLE Scalable UL
from 40 to 150 kW

In case of updating must be revised also ABB document 4NWD005449

Series: 1 | 0001300086 | Page 1 of 6

ABB Proprietary and Confidential. All rights for transmission, duplicating or reprinting reserved

COMMON INPUT UTILITY

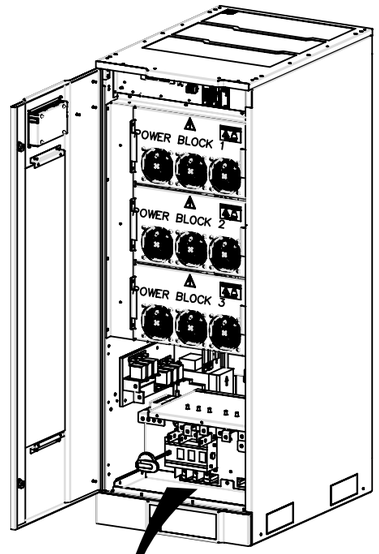

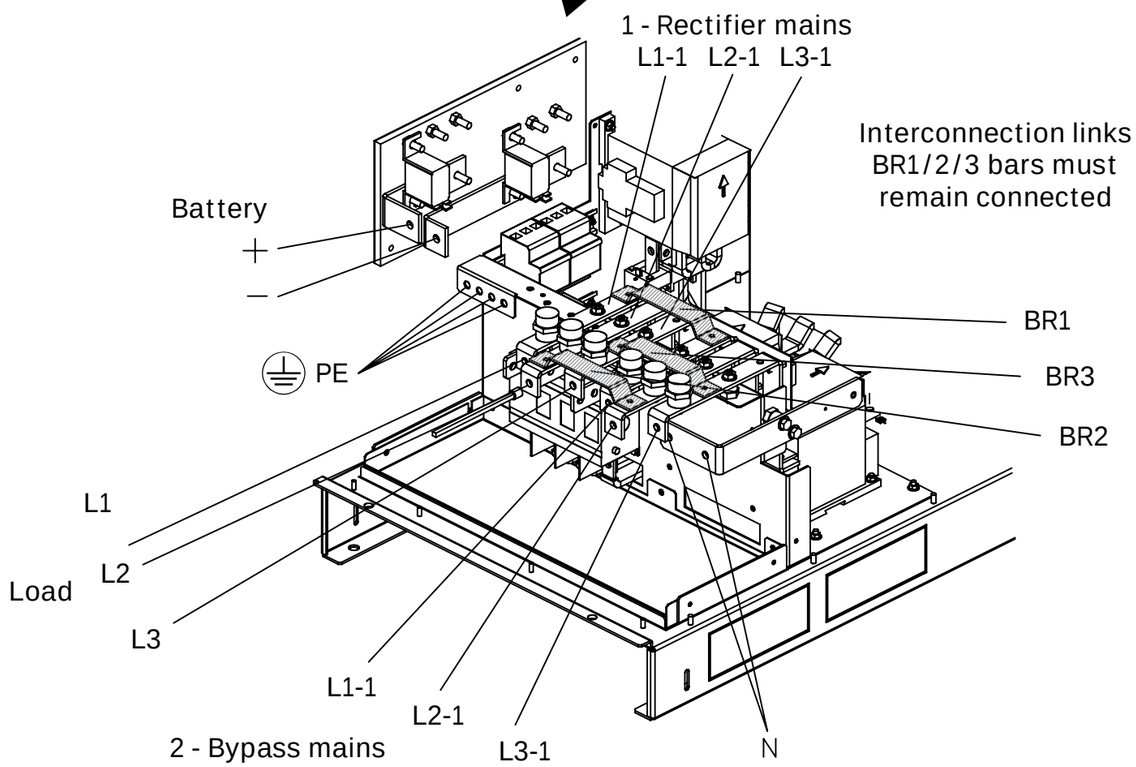

Maximum Allowed Cable Configuration					
kW	Rectifier Input	Bypass Input	DC Input	Output (Load)	GND
40	1 x AWG 2	1 x AWG 4	1 x AWG 1	1 x AWG 4	AWG 6
50	1 x AWG 1	1 x AWG 1	1 x AWG 1 / 0	1 x AWG 1	AWG 6
80	1 x AWG 4 / 0	1 x AWG 4 / 0	1 x AWG 4 / 0	1 x AWG 3 / 0	AWG 4
100	1 x AWG 4 / 0	1 x AWG 4 / 0	2 x AWG 2 / 0	1 x AWG 4 / 0	AWG 4
120	2 x AWG 2 / 0	2 x AWG 1 / 0	2 x AWG 3 / 0	2 x AWG 1 / 0	AWG 4
150	2 x AWG 3 / 0	2 x AWG 3 / 0	2 x AWG 4 / 0	2 x AWG 3 / 0	AWG 3

*** Actual cable size and quantity must be based on the requirements of NFPA 70 and must not exceed the limits listed above.**

DUAL INPUT UTILITY

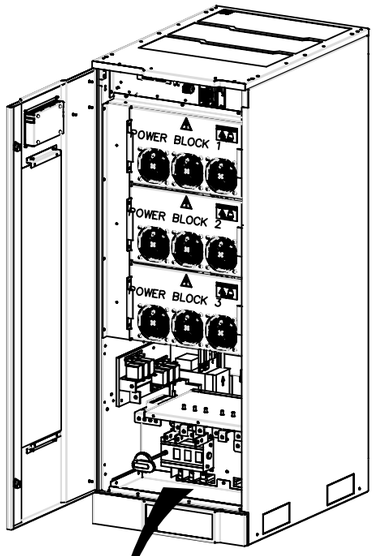

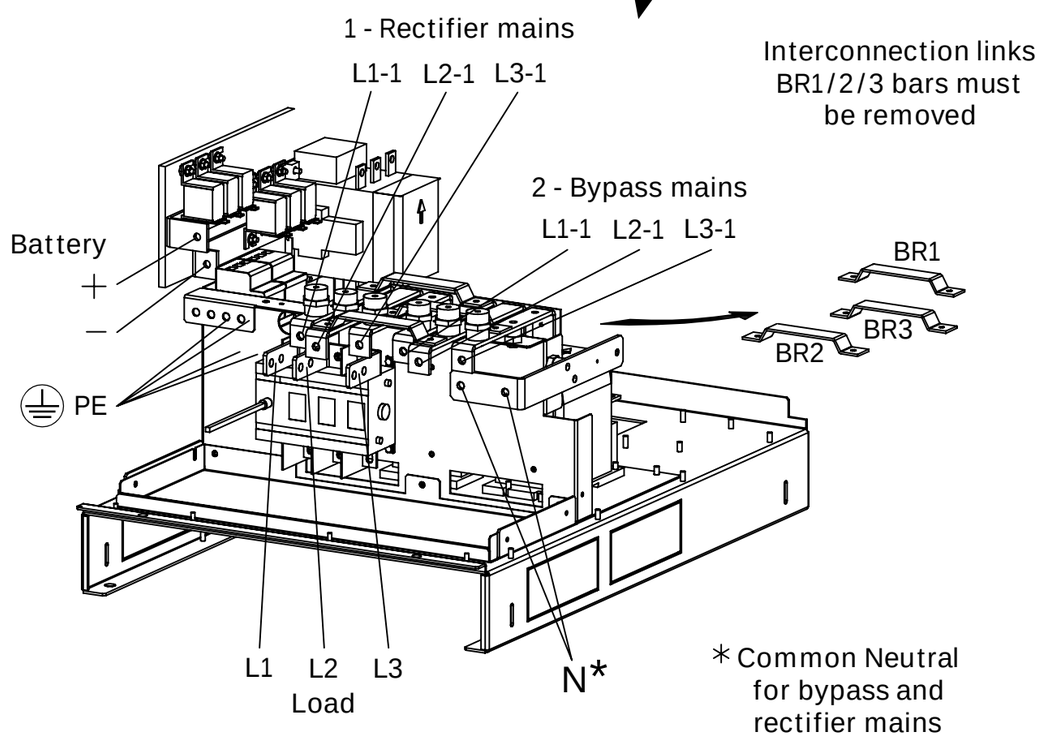

			Draw	Barbarani R.	20.04.21	ABB Electrification Products Industrial Solution	Power Protection 6572–Quartino, Switzerland	Mechanical Outline	TLE Scalable UL from 40 to 150 kW	In case of updating must be revised also ABB document 4NWD005449
			Checked	Balbiano C.	20.04.20					Series: 1 / 0001300086 / Page 2 of 6
ECN		Name	Revision	1	25.03.20					

ABB Proprietary and Confidential. All rights for transmission, duplicating or reprinting reserved

TLE 40-150KW UL Scalable - POWER SCALABILITY CONFIGURATION

40 - 50KW

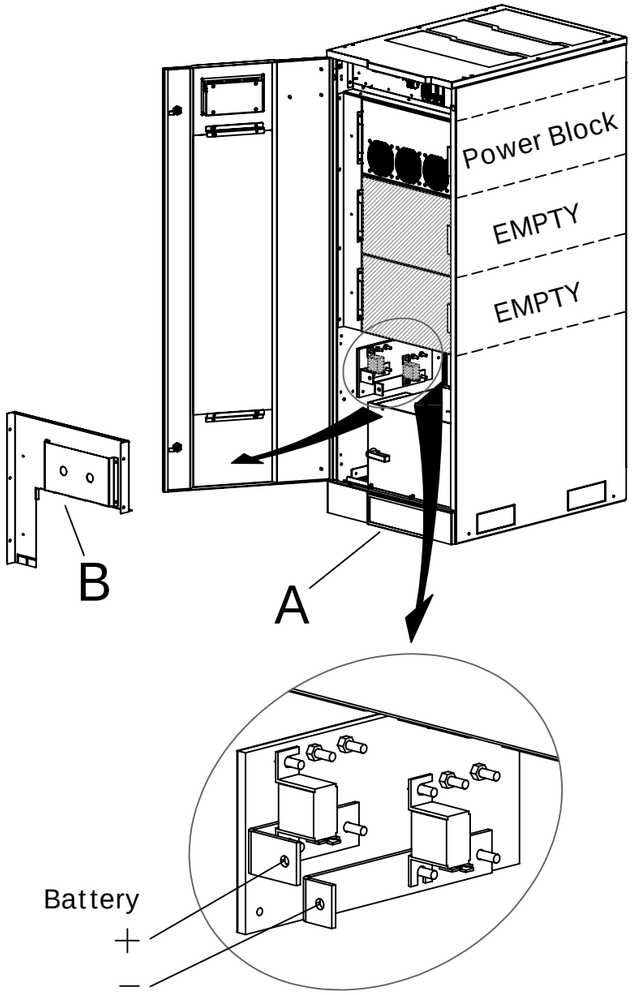

Nr. 2 battery fuses

80 - 100KW

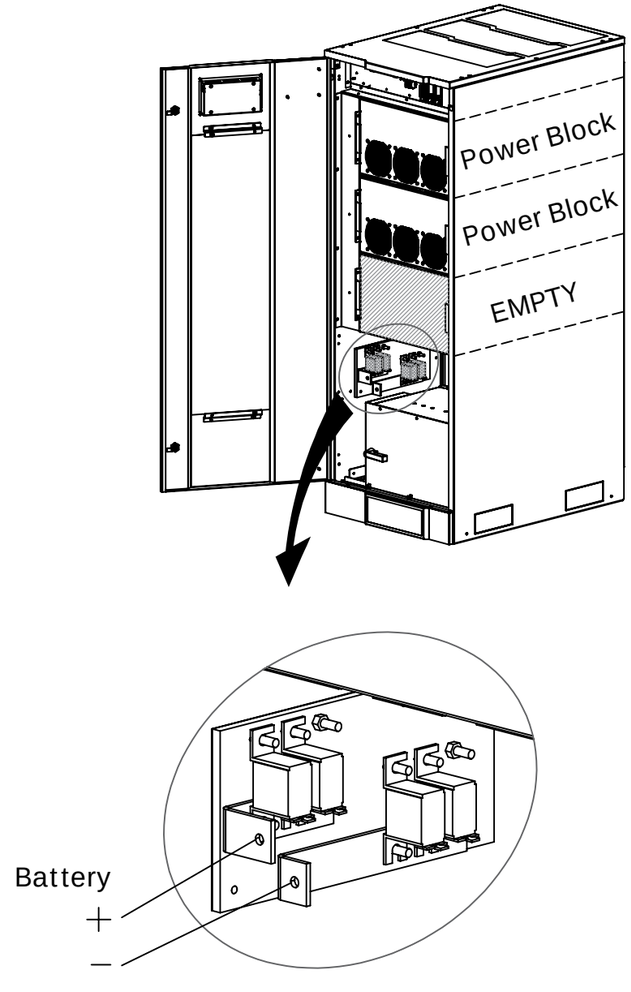

Nr. 4 battery fuses

120 - 150KW

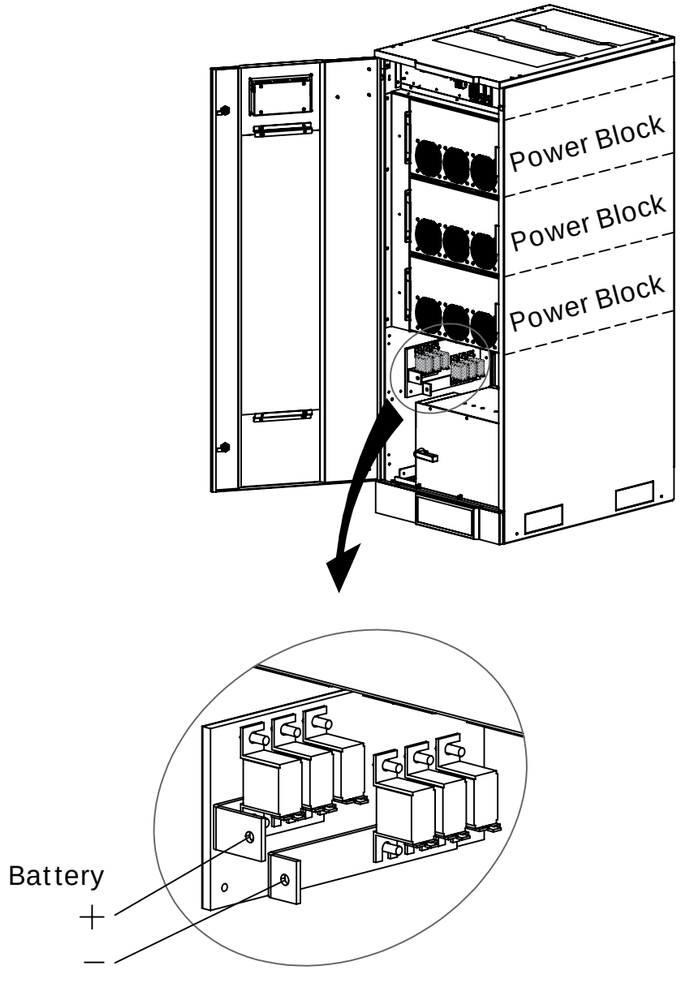

Nr. 6 battery fuses

			Draw	Barbarani R.	20.04.21	ABB Electrification Products Industrial Solution	Power Protection 6572–Quartino, Switzerland	Mechanical Outline	TLE Scalable UL from 40 to 150 kW	In case of updating must be revised also ABB document 4NWD005449
			Checked	Balbiano C.	20.04.20					Series: 1 / 0001300086 / Page 3 of 6
ECN		Name	Revision	1	3.12.14					

ABB Proprietary and Confidential. All rights for transmission, duplicating or reprinting reserved

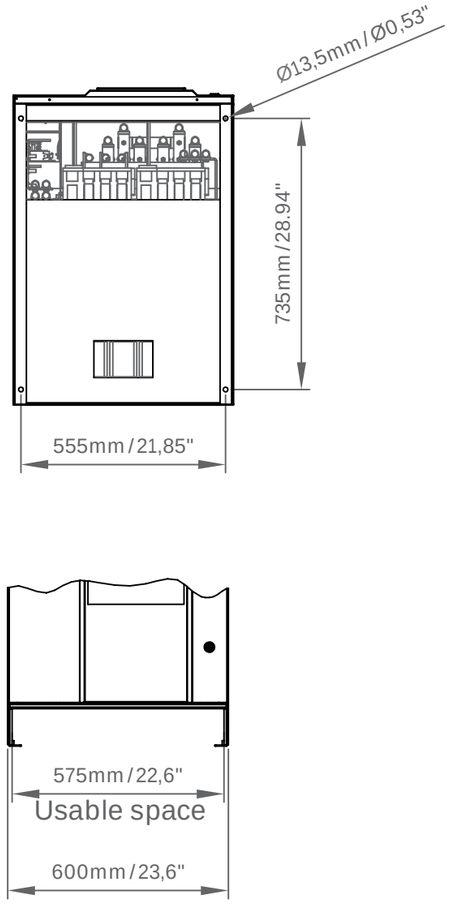

UPS cabinet

Seismic NOTE: Use dedicated Expansion anchors in carbon steel and stainless steel, approved for cracked concrete, non-cracked concrete and seismic.

SEISMIC ANCHORING DETAILS	
Anchor Diam.	**Minimum Embedment Depth**
0.53"	**3-3/4"**

UPS side view

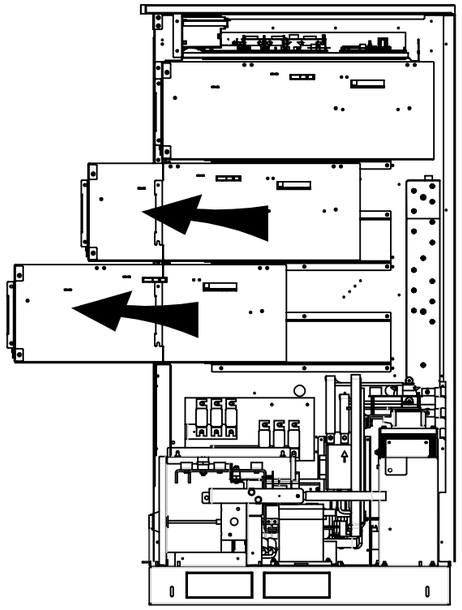

UPS front view

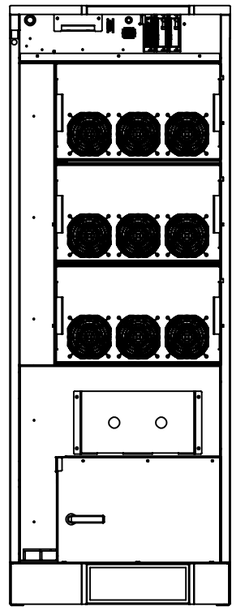

Power Block

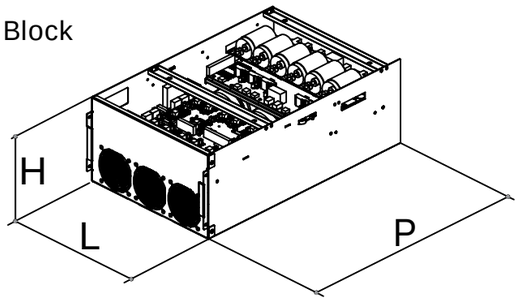

POWER BLOCK 50KW / 480V

Weight: 70 Kg / 154 lbs

H = 265,5mm / 10,5"

L = 449mm / 17,7"

P = 756,5mm / 29,8"

			Draw	Barbarani R.	20.04.21
			Checked	Balbiano C.	20.04.20
ECN		Name	Revision	1	25.03.20

ABB Electrification Products Industrial Solution

Power Protection
6572–Quartino, Switzerland

Mechanical Outline

TLE Scalable UL
from 40 to 150 kW

In case of updating must be revised also ABB document 4NWD005449

Series: 1 | 0001300086 | Page 4 of 6

ABB Proprietary and Confidential. All rights for transmission, duplicating or reprinting reserved

BATTERY CABINETS

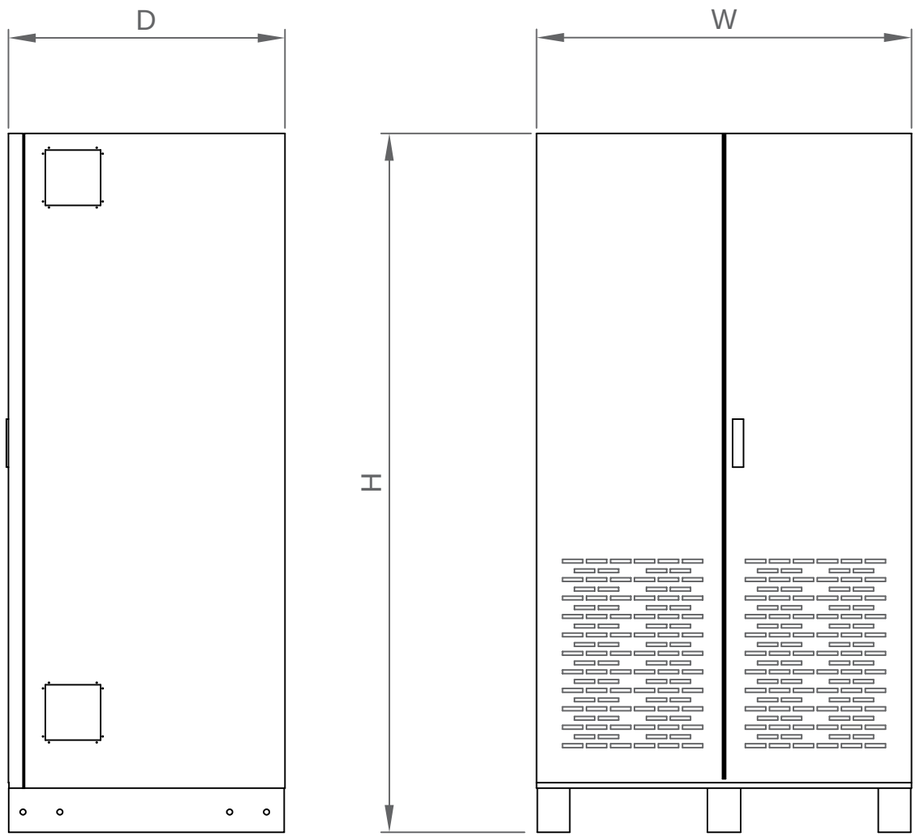

Battery Table UPS	Battery capacity	Autonomy time	Dimensions (W x D x H)	Weights	Floor loading
TLE Scalable Series 150 / 40	*) Ah HR	*) min.	29.8 x 29.50 x 75.00 inches 757 x 750 x 1905 mm	*) Lbs Kg	*) Lbs/sq.ft Kg/m²
TLE Scalable Series 150 / 50					
TLE Scalable Series 150 / 80					
TLE Scalable Series 150 / 100			40.0 x 29.50 x 75.00 inches 1016 x 750 x 1905 mm		
TLE Scalable Series 150 / 120					
TLE Scalable Series 150 / 150					

* For more information see Technical Data Sheets / Operation & Maintenance Manual of Battery Cabinet.

			Draw	Barbarani R.	20.04.21
			Checked	Balbiano C.	20.04.20
ECN		Name	Revision	1	3.12.14

ABB Electrification Products Industrial Solution

Power Protection
6572-Quartino, Switzerland

Mechanical Outline

TLE Scalable UL
from 40 to 150 kW

In case of updating must be revised also ABB document 4NWD005449

Series: 1 | 0001300086 | Page 5 of 6

ABB Proprietary and Confidential. All rights for transmission, duplicating or reprinting reserved

UPS and BC50 Battery Cabinet - Matching Solution

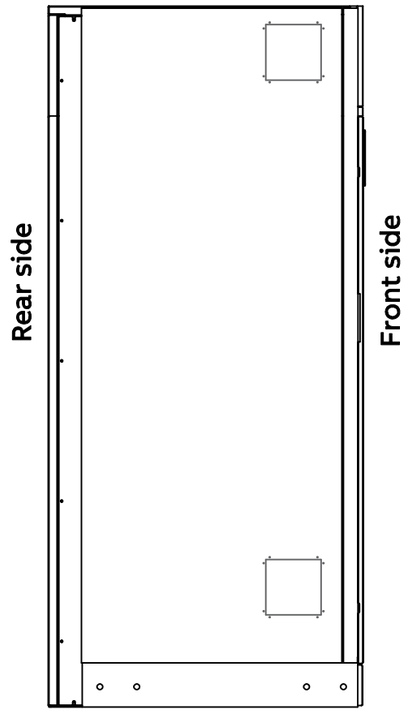

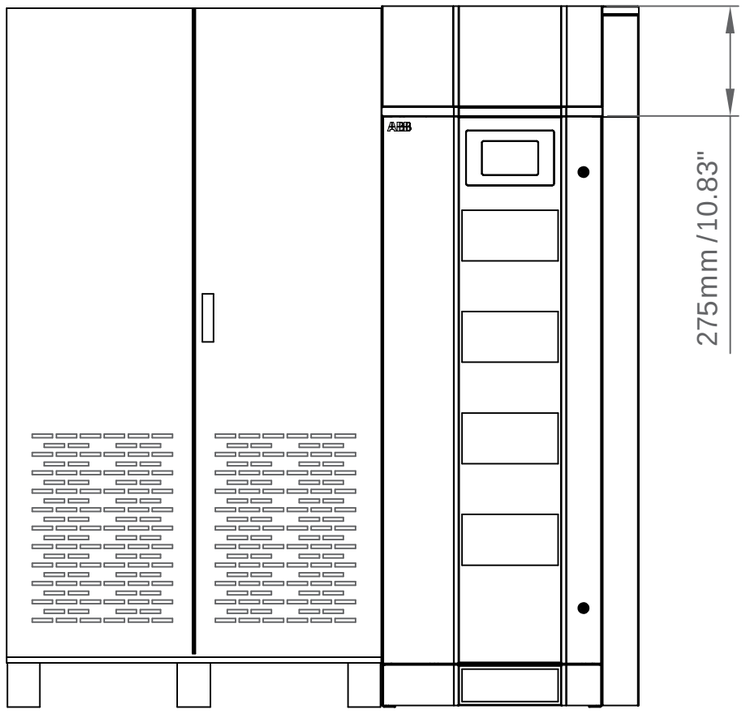

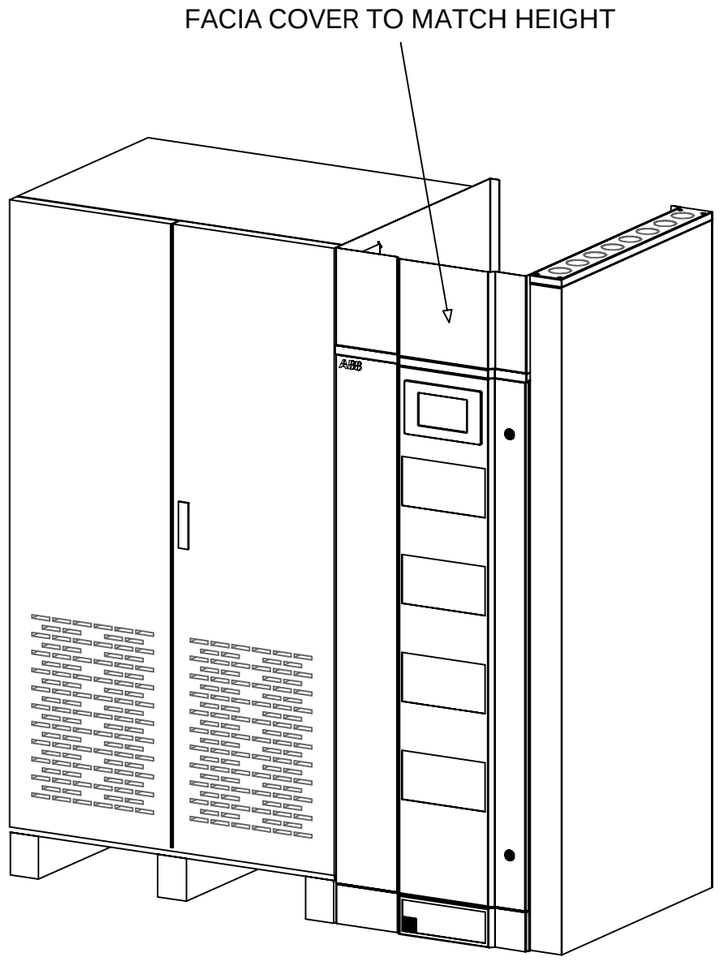

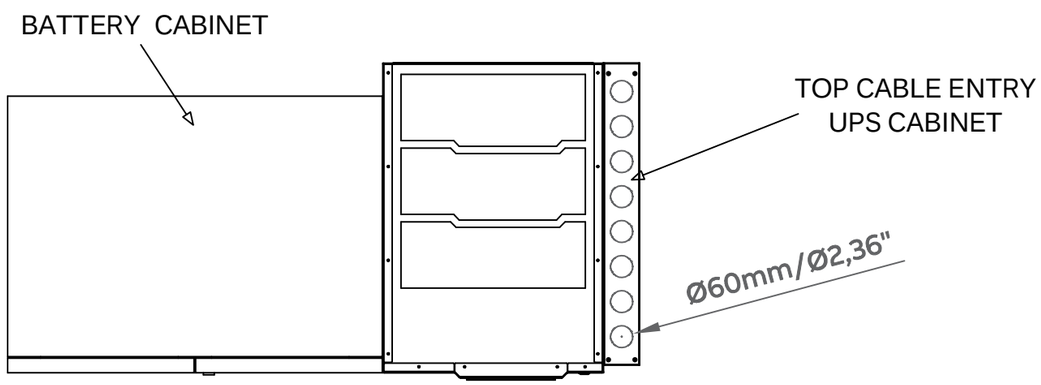

			Draw	Barbarani R.	20.04.21
			Checked	Balbiano C.	20.04.20
ECN		Name	Revision	1	25.03.20

ABB Electrification Products Industrial Solution

Power Protection
6572-Quartino, Switzerland

Mechanical Outline

TLE Scalable UL
from 40 to 150 kW

In case of updating must be revised also ABB document 4NWD005449

Series: 1 | 0001300086 | Page 6 of 6

ABB Proprietary and Confidential. All rights for transmission, duplicating or reprinting reserved