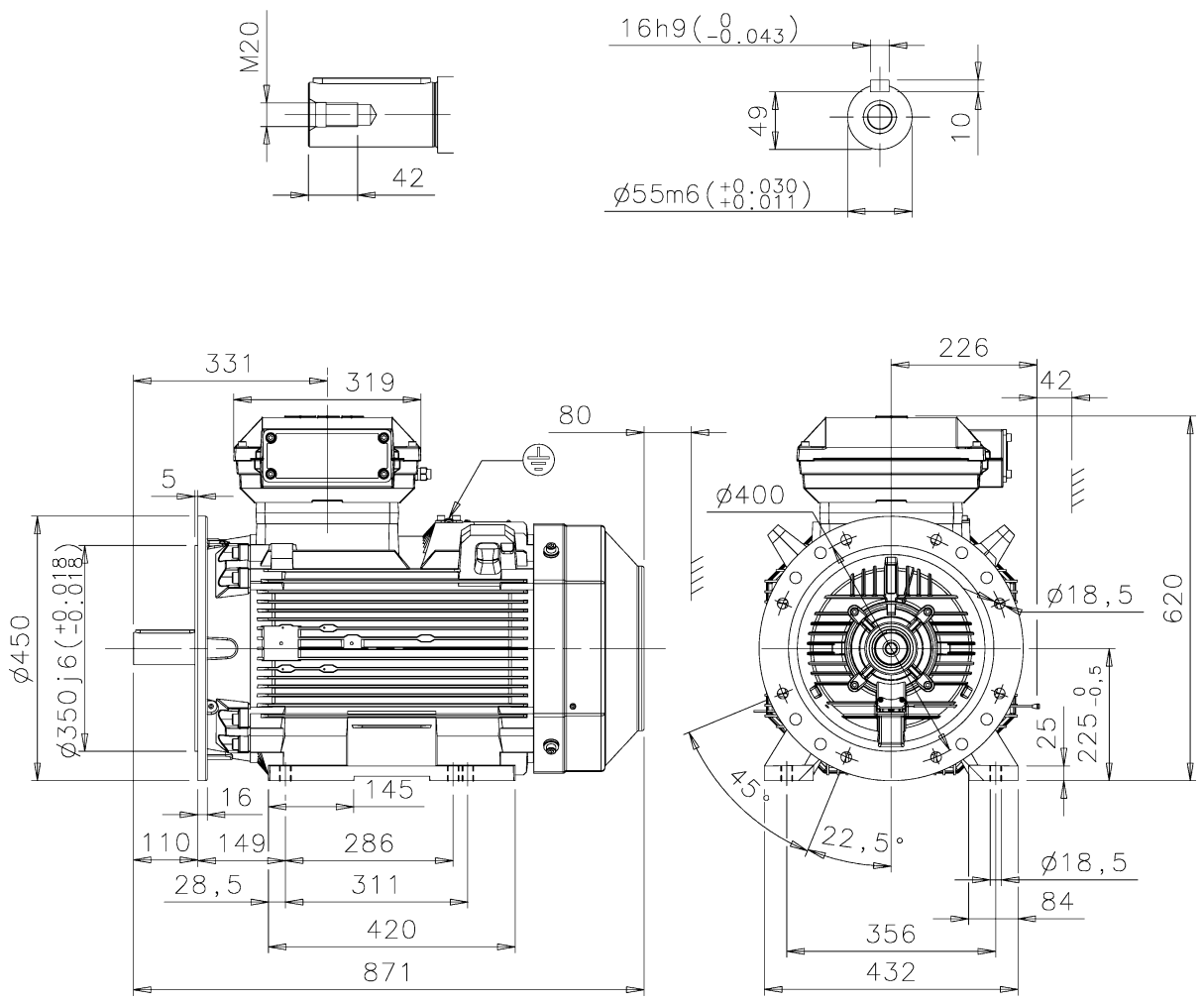

Additional information:

Dimension Print	Motor Type: M3KP 225SM_2 B35, V36 (K, L)	Document No: 3GZF500122-228 A 13 KP 225 A
Description: STANDARD SQUIRREL CAGE MOTOR		

Unit:	ABB Oy, Motors and Generators	Issued by:	S.A.Rahtu	Replaces:
Date:	16.06.2015	Approved by:	T.Kuusisto	Replaced by:

ABB Oy	Customer Reference:	ABB