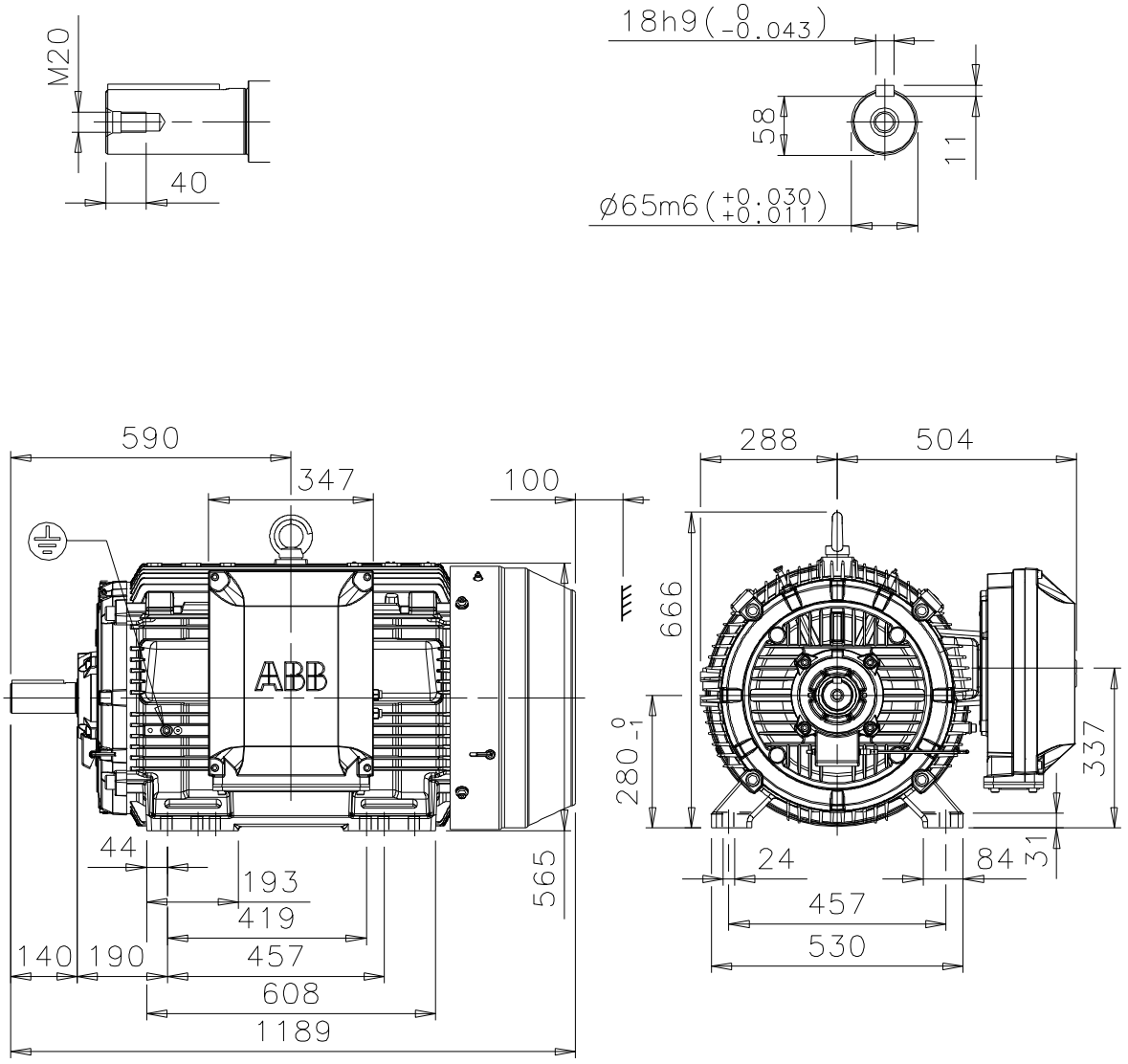

Additional information:

Dimension Print	Motor Type: M3/M4BP 280ML_ 2 B3, B6, B7, B8, V5, V6 M3HP/GP 280ML_ 2 B3, B6, B7, B8, V6	Document No: 3GZF500028-505 B 13 BP 280 A
Description: STANDARD SQUIRREL CAGE MOTOR, TERMINAL BOX RHS		

Unit:	Motors and Generators	Issued by:	J.Huhtamäki	Replaces:
Date:	29.06.2011	Approved by:	P.Viitanen	Replaced by:

ABB Oy	Customer Reference:	ABB