ABB Automation Inc.
Substation and Automation Division
Coral Springs, FL
Allentown, PA

Descriptive Bulletin
41-461M

Type REL 350 High-Speed Segregated Phase Comparison Line Protection System

September 2000

Device Number: 78
For Phase and Ground Fault Protection of Transmission Lines

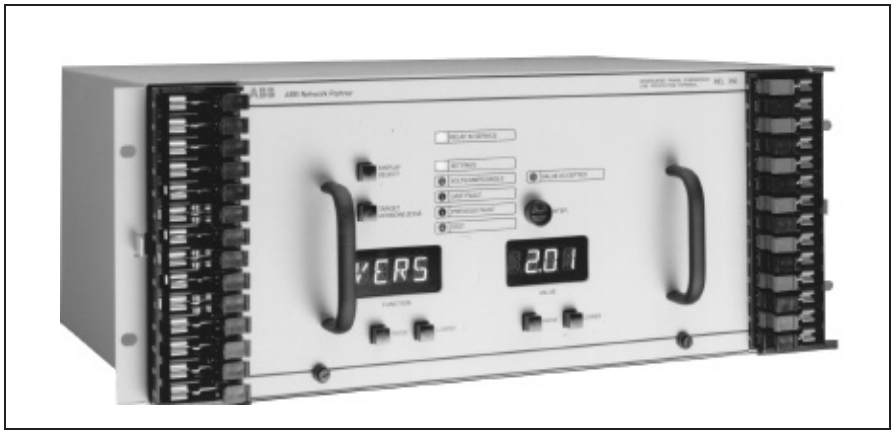

BASIC SYSTEM

Standard Features

- Numerical Processing (Fully Digital)
- Multiple Microprocessor Design
- Phase Comparison Algorithm for each Phase and Ground
- Current Change (DI) Detectors and Selectable Voltage Change (DV) Detector
- Four Low Set Overcurrent Detectors for open breaker
- Four High Set Overcurrent Units for Direct Trip
- Fault Locator Function
- Self Checking Function
- Sampling Techniques
  - 7 Incoming Analog Waveforms
  - 12 Samples per Cycle
- High Speed Operation
- Local Target Data Availability
- Local Man-Machine Interface
- 19 Inch wide Rack Mounting; 4-Rack Units High
- Loss of Potential Supervision
- Loss of Current Monitoring
- Reclose Into Fault Detection
- 50 or 60 Hz Operation
- 1 or 5 Ampere Current Transformer Operation
- Meets and/or exceeds ANSI/IEC Standards
- Contact Outputs for:
  - Breaker Trip
  - General Start
  - Breaker Failure Initiate
  - System Failure Alarm
  - Reclose Initiate
  - Channel Alarm
  - Reclose Block
  - Trip Alarm
- RS-232C Communications Port (RS-232 PONI)
- Continuous Communication Channel Delay Measurement
- Direct Transfer Trip (56/64 kbps option)
- Single 4-kHz Channel Operation (9600 bps Audio Tone Option)
- Digital Fault Recording Capability

Optional Features

- FT-14 Test Switches
- Zone 2 and 3 Distance Relay Function for Phase Faults
- Dual Power Supply
- Single Pole Trip Function
- Zone 2 and 3 Distance Relay or Directional Overcurrent Function for Ground Faults
- RS-232C Product Operated Interface (PONI) with IRIG-B input
- Communications Interface to:
  - 9600 bps Audio tone Output Unconditioned telephone circuit or equivalent)
  - 56/64 kbps Direct Digital Channel Output
  - 56/64 kbps Fiber Optic 850 nm, ST connector, multimode cable
  - 56/64 kbps Fiber Optic 1300 nm, ST connector, single mode cable
  - Optional G.703 Interface

APPLICATION

REL 350 is a Numerical (Fully Digital) Segregated Phase Comparison Transmission Line Protection System with Optional Distance Backup Protection and Digital Fault Recording and Fault Locating Functions are also included as standard features. The REL350 functionally replaces the present solid state Segregated Phase Comparison SPCU-1A Relay System. The REL350 uses new hardware technology with a proven operating principle and field experience.

The Segregated Phase Comparison system was originally developed in the early 1970's to solve the relaying problems created by the use of series capacitors in transmission lines. The original relay was referred to as the type SPCU. During 1975 the SPCU relay was redesigned to detect internal faults with current flowing out one terminal. To achieve this, the redesigned relays incorporated "offset keying". The new relays were called SPCU-1A.

The SPCU-1A system was a special form of current differential relaying. Because of the fundamental nature of the design approach, the SPCU-1A system was proven to be applicable to other critical line relaying functions, in addition to protecting series compensated lines.

The new REL 350 relay system functionally replaces the SPCU-1A relay system. The goal of the new system is to reduce hardware costs and the channel spectrum required so its application can include non-series compensated lines. The existing SPCU-1A philosophy has been very successful in the field. The same relaying philosophy is designed into the REL 350 with manyimprovements.These improvements address the primary weaknesses of the SPCU-1A: line test sensitivity, no inherent backup, and multiple 4 kHz channels required.

Although particularly suitable for critical EHV applications (series capacitors or single-pole), ***the REL 350 is applicable to any transmission line which requires high-speed relaying and superior protective reliability.***

The unusual conditions caused by series compensation on EHV transmission lines have given utility relay protection engineers some interesting problems and challenges.

When series capacitors are applied, relaying problems are introduced:

1. Voltage reversals may be caused by the negative reactance of the series capacitors. This may cause a distance relay to “see” a fault in the forward direction and treat it as though it were in the reverse direction.

2. Phase imbalance caused primarily by series capacitor protective gaps flashing and reinserting unsymmetrically.

3. Oscillograms have shown abnormal frequencies from 20 to 400 Hertz may be present during fault and post-fault intervals.

4. Current inversions can occur where parallel lines exist or where the source reactance is less than the series capacitor reactance.

To properly overcome these problems, the REL 350 Numerical Segregated Phase Relaying System was developed. The REL 350 system will correctly operate regardless of the capacitor locations or the amount of compensation. ***It is also suitable for lines requiring independent-pole, selective-pole, or single-pole tripping.***

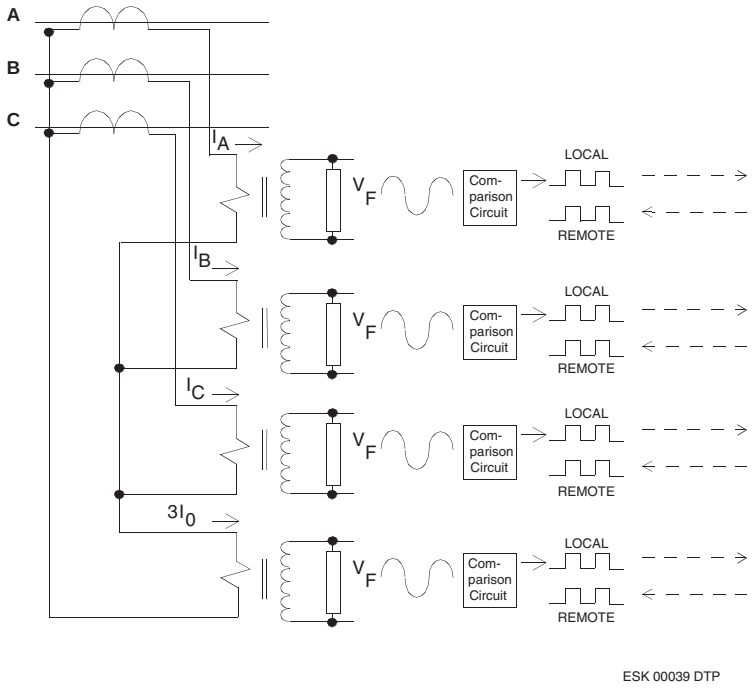

Segregated Phase Comparison (REL 350)

Advantages of Segregated Phase Comparison System

1. High-speed operation due to angle diversity among phases, eliminating of all filters in the phase comparison circuitry, and comparison based on “raw” current (allowing dc offset and sub-harmonics to aid fast tripping).

2. Inherent redundancy. The A, B, C and G sub-systems back-up each other.

3. The system operates properly in the presence of phase impedance unbalances such as those caused by unsymmetrical gap flashing, unequal pole closing or single-pole tripping.

4. Inherent phase selection for all types of faults including inter-line faults.

5. It offers a straight forward method of relaying the simultaneous open-conductor plus SLG fault on one side of the open.

6. Facilitates reclose blocking for three-phase faults. Outputs from A, B, C, and G subsystems allow for simple recognition of three-phase faults.

7. System is unaffected by unbalanced distribution factors (i.e., a disproportionate amount of zero- sequence current relative to positive or negative sequence current from a given terminal).

8. Unaffected by voltage or current reversal caused by series capacitors.

9. REL 350 operates properly in the presence of abnormal power system frequencies. For instance, abnormal frequencies such as associated with series capacitors and long EHV transmission lines.

Additionally, all the traditional advantages of current-only relaying are inherent with the REL 350 approach:

- Not responsive to system swings.
- Unaffected by inadvertent loss-of-potential (i.e., due to a blown potential fuse).
- No mutual induction problems.
- Will relay correctly during zero-voltage three-phase faults.
- Not subject to transient problems associ - ated with coupling capacitor potential devices.
- Will correctly single-pole trip when used in a parallel series compensated environment.

DESIGN

The Basic Operation Fundamentals of the REL 350 system compares the phase (angular) position of current in each phase (and ground) separately. These comparisons are based on square waves derived from (unfiltered) power system currents. Each comparison is via a common communication channel.
Thus four sub-systems are created — Phase A, Phase B, Phase C and Ground. The sub-systems allow a separate phase comparison of each phase current and ground current to be performed.

The ground sub-system is included to protect against single-line-to-ground (SLG) faults with high-fault resistance and heavy through load and to provide backup for all normal ground faults. The ground sub-system also provides protection for the simultaneous open conductor and SLG fault on one side of the open.

RELAY FUNCTION

Sampling of Currents

The REL 350 samples seven incoming waveforms. These are Phase A, B, C and ground currents and phase voltages. Each waveform is sampled 12 times per cycle.The data for each are stored in memory for use in calculating the relay trip.

Overcurrent Functions

The microprocessor examines each incoming sample to determine if the magnitude is above any one of several current thresholds. These are:

I_E : Very Low Set Overcurrent function:
Range 0.04 x I_n to 0.1 x In in 0.002 x I_n steps. The I_E provides the open breaker function. However, a 52b contact input also is provided for an alternate to I_E for open breaker keying.

I_L: Low Set Overcurrent (Supervision) Function:
Range 0.1 x I_n to 0.8 x I_n in 0.02 x I_n steps.

I_H: High Set Overcurrent Function:
Range 0.8 x I_n to 16.0 x I_n in 0.02 x I_n steps.

C_D: Rate of Change of Current and Voltage Detector:
Operates on a change of 12.5% (samples spaced one cycle apart) or greater.

The above current ranges are for an I_n = 5A secondary ct. Each of the above current ranges shall be divided by 5 for use with a 1A secondary ct. The change between a 5A and a 1A version of the relay is done by changing the input transformer ratio. Each of the above fault detectors is implemented for each of the four phase currents. The I_E function is not required for ground.

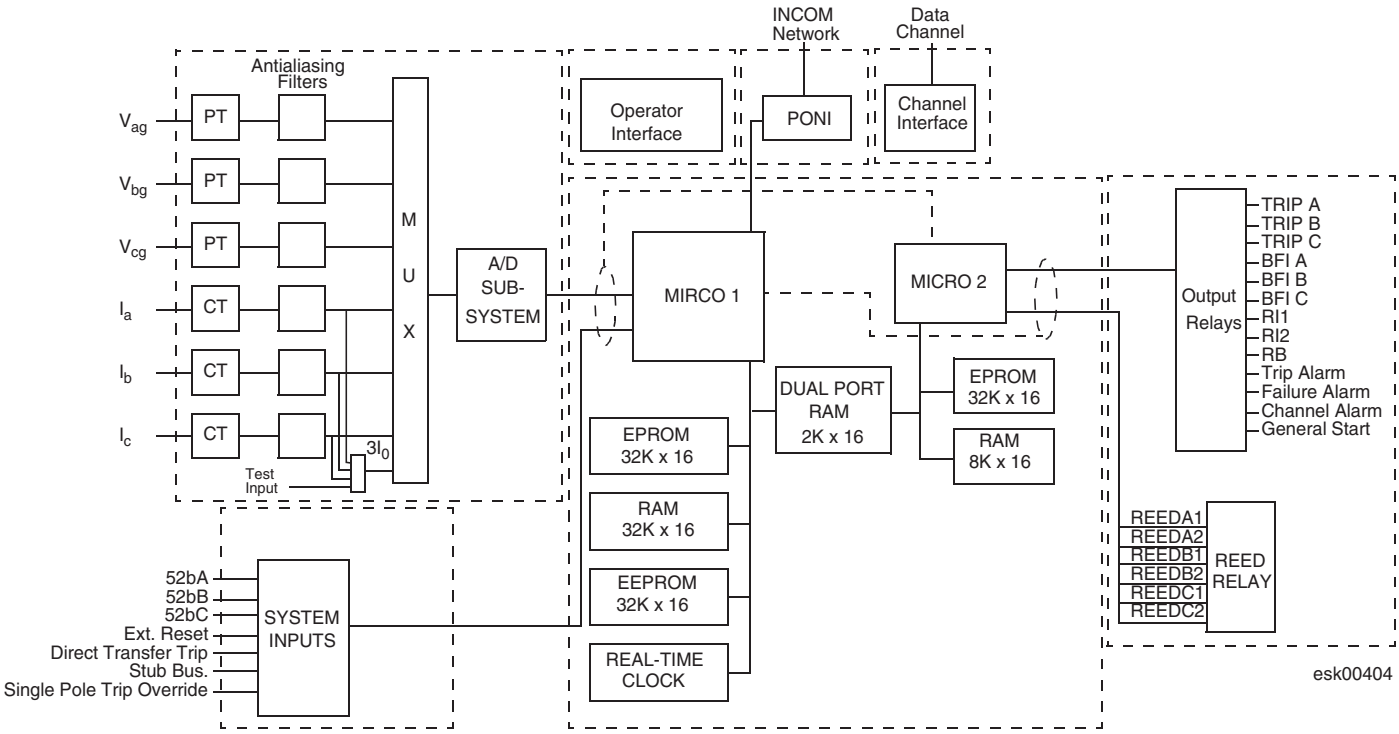

Simplified Block Diagram (REL 350)

Pulse Train Current Functions

The microprocessor examines each incoming sample and determines if the sample magnitude is above a given level. If the level is exceeded, the time this event took place must be calculated using linear interpolation between the present sample and the one prior to it. Each phase uses a different bit of the same type to store its data. Bit 0 is for ground, bit 1 is for phase C, bit 2 is for phase B, and bit 3 is for phase A. Sixteen subsamples" of this type of data are calculated between each sample point. Thus, using this algorithm the system effectively increases the sample rate 16 times.

The relay system supplies the threshold cross over each of the pulse train functions on each of the sampled currents with a resolution of 0.086 ms (for 60 Hz).

Each of the four bits represent a pulse train of information when the same bit of successive bytes are taken in time. The level detection ranges are:

I_{KEY} /Local: 0.2 x I_n to 4.0 x I_n in 0.02 x I_n steps

I_{KEY} /Remote: 0.2 x I_n to 4.0 x I_n in 0.02 x I_n steps

I_{DIFF} : 0.1 x I_n to 3.9 x I_n in 0.02 x I_n steps

Each of the calculated sample bytes is placed in an 8 bit latch whose output is connected to the channel encoding logic for serial data transmission.

Overall Relay System Speed

This particular system is asked to handle many types of unusual power system faults, such as high resistance ground faults, faults with outfeed for an internal fault, and faults with unequal gap flashing of series capacitors. Typical operating speed is 24 ms for 9600 bps audio tone channel and 15 ms for 64 kbps digital channel.

Relay Logic Functions

The microprocessor implements all the logic functions for all three phases and ground.

Open Breaker Function

When the I_E function is not operated and/or the 52b contact is closed, the relay system places a special open breaker code in the 8 bit latch to the channel logic. This code will remain as long as the above conditions exist.

Also the processor checks the incoming data byte and if it receives an open breaker code it will trip if the IL function operates. The open breaker trip is delayed by an amount equal to the local delay timer setting plus an extra 8 ms.

Optional Backup Relay Function

The relay system offers an optional backup relay function in the form of Zone 2 and Zone 3 Phase and Ground Distance Protection. The Backup Option also offers Out-of-Step Block (OSB) and Out-of Step Trip (OST) capabilities. All these functions are selectable.

The backup feature of the relay is only used when a loss of channel occurs. The REL 350 monitors for loss-of-channel and blocks all tripping of the Phase Comparison System during this condition. If the channel is lost for a continuous period of 150 ms, the relay system will run the backup algorithms. During the 150 ms time-out to lock-out, the relay runs the unblock logic if it has been selected.
The REL 350 monitors the noise of the channel and blocks all tripping of the phase comparison system during noise conditions. If the channel trouble exists (either noise or loss-of-channel) for a continuous period of 150 ms, then the relay system will run the backup algorithms. If the channel returns to normal and the guard code is received for a period of 150 ms then the relay returns to the normal phase comparison algorithm.

Optional Single-Pole Trip Function

The relay system offers the capability of providing a single-pole-trip function. The single-pole trip logic is implemented as shown above. The customer may choose single-pole trip or three-pole trip options.

For the situation when a single-line-to-ground fault occurs and there is not adequate fault current to allow one of the phase subsystems to operate, then single-pole tripping cannot be identified in this case using the traditional technique. Therefore, if the ground subsystem operates and a concurrent operation of a phase subsystem does not occur, the REL 350 uses a phase selector algorithm to determine which phase to trip. This algorithm uses zero sequence current subtracted from phase current and compares the magnitudes for each phase to identify the fault type. The tripping may be somewhat slower in this case since the ground fault will be low level and will not cause a power system stability problem.

Single-pole operation is defined as the tripping of only the faulted phase for single line-to-ground faults (SLG) while tripping all three phases for all other faults.

Fault Location Function

The relay provides a fault locator function. Care should be taken when interpreting readings obtained in a series compensated line.

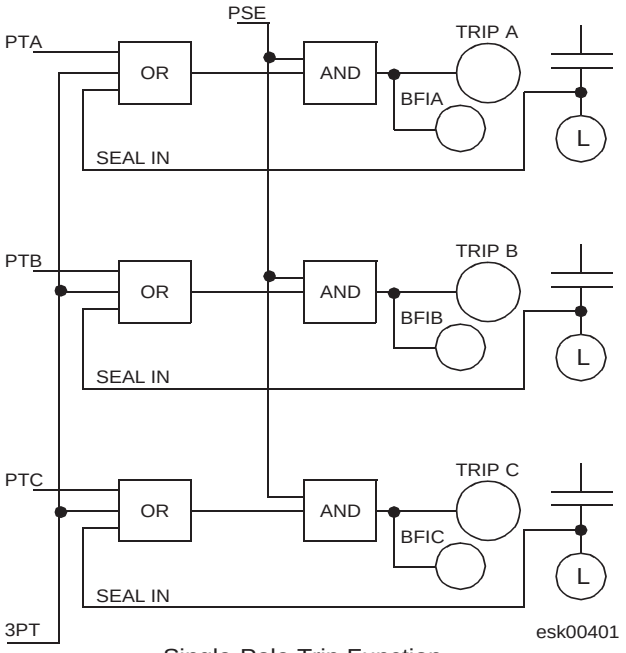

Single-Pole Trip Function

COMMUNICATION CHANNEL REQUIREMENTS

The REL 350 Communication Channel Interface (modem/codec) is included with the relay system. One of the options is an audio tone output operating at 9600 bits per second (bps). This audio tone output may be used on any type of carrier equipment that offers an audio channel with a bandwidth of 500 to 2800 Hz at its 3 dB point. This could be utility owned microwave, utility owned T1 or CCITT PMC system, or leased circuit. The 9600 bps audio tone interface requires a 3002, C2 conditioned telephone circuit or equivalent. Other channel versions are also available. One of these is a 54/64 kilobit per second (kbps) data stream output for use with a standard T1 or CCITT digital channel.The REL 350 is also available with the 56/64 kbps system directly driving a fiber optic source for those customers who wish to devote a pair of fibers to the relay function. Optional ITU (CCITT) G.703 interface is also available.

Specifications

- Four subsystem segregated phase comparison protection
- Optional two-zone phase and ground distance and/or directional ground overcurrent backup
- Current/Voltage change detectors to initiate fault measurement
- Instantaneous overcurrent function for close into fault detection
- High set instantaneous overcurrent direct trip
- Offset keying

REL 350 SPECIFICATIONS

Setting Ranges

- Ct ratio: 30-5000 in steps of 5
- Pt ratio: 300-7000 in steps of 10

Overcurrent Ranges

I_E 0.04 x I_n to 0.1 x I_n in 0.002 x I_n steps

I_L 0.1 x I_n to 0.8 x I_n in 0.02 x I_n steps

I_H 0.8 x I_n to 16.0 x I_n 0.02 x I_n steps

Square Wave Current Ranges

I_{KEY} LOCAL 0.2 x I_n to 4.0 x I_n in 0.02 x I_n steps

I_{KEY} REMOTE 0.2 x I_n to 4.0 x I_n in 0.02 x I_n steps

I_{DIFF} 0.1 x I_n to 3.9 x I_n in 0.02 x I_n steps

Back-up Options

- Phase and Ground Distance (Zone 2,3)
  - 0.01 - 50 Ohms in 0.01 Ohm steps for 5A (ct)
    Zone 2 Timer 0.0 to 2.99 sec in 0.01 steps
    Zone 3 Timer 0.1 to 2.99 sec in 0.01 steps
    Line Angle 40 to 90 degrees in 1 degree steps
  - 0.05 - 250 Ohms in 0.05 Ohm steps for 1A (ct)
    Zone 2 Timer 0.0 to 2.99 sec in 0.01 steps
    Zone 3 Timer 0.1 to 2.99 sec in 0.01 steps
- Directional Ground Overcurrent
  0.5 - 10 amps in 0.5A steps for 5A (ct)
  0.1 - 2 amps in 0.1A steps for 1A (ct)
  0.1 - 9.99 sec Timer in 0.01 sec steps

Reclose Block (RB) Logic

NORB NO RB
3ØRB RB FOR 3Ø Faults only
MØRB RB for Multiphase Fault
ALRB All RB

Channel Communication Interface Options

- 9600 bps Audio Tone Output
- 56/64 kbps Direct Digital Channel Interface
- 56/64 kbps Fiber Optic 850 nm, Multimode ST Connector
- 56/64 kbps Fiber Optic 1300 nm, Single Mode, ST Connector
- Optional ITU (CCITT) G.703 Inter face

TECHNICAL SPECIFICATIONS

General

Operating Speed
15 ms (Typical) 64 kbs
24 ms (Typical) 9600 bps

Ac Voltage V_N	70 Vrms
Ac Current I_n	1 or 5A rms
Rated Frequency	50 or 60 Hz

Maximum Permissible ac Voltage

Continuous	160 Vrms
10 Seconds	240 Vrms

Maximum Permissible ac Current

Continuous	15 rms
15 Seconds	160A rms

Dc Battery Voltages

Nominal	Operating Range
48/60 Vdc	38 - 70 Vdc
110/125 Vdc	88 - 140 Vdc
220/250 Vdc	176 - 280 Vdc

Burdens

Dc Battery	15 Watts Normal 40 Watts Tripping
Voltage	0.02 VA/Phase at 70 Vac
Current	0.45 VA at 5A

External Connections

- Terminal blocks located on the rear of the chassis suitable for #14 square tongue lungs

Dimensions and Weight of Chassis

- (4RU) 7.0” high (1.77.8mm)
- Standard 19” rack mounting (482.6mm)
- 14” deep (365mm) over terminal blocks
- 38 pounds (17.5 kg net)

Ambient Temperature Range

For Operation -20°C to + 60°C
For Storage -40°C to + 80°C

Insulation Test voltage

- 2.8 kVdc, 1 minute; 3.2 kVdc, 1 sec (ANSI C37.90 and/or IEC-255.5)

Impulse Voltage Withstand

- 5 kV Peak, 1.2 x 50 microseconds 0.5 Joule, (IEC-255-5)

Surge Withstand Voltage

- 3 kV, 1 MHz (ANSI C37.90.1 and/or IEC-255-22-1)

Fast Transient Voltage

- 4 kV, 10 x 100 nanoseconds Withstand (ANSI C37.90.1, IEC 255-22-4)

EMI volts/Meter Withstand

- 25 MHz-1GHz, 10 V/m Withstand (ANSI C37.90.2)

CONTACT DATA

Trip Contacts

- Make and carry 30A for 1 second
- 10A continuous
- Break 50 watts resistive or 25 watts with L/R =.045 seconds

Non-Trip Contacts

- 1A Continuous
- 50 VA resistive interrupt capability
- Supports 1400 Vdc across open contacts

REL 350 CATALOG

Options	Cat. #	MS	3	B	2	P	A	F	R	G
		Typical catalog number								
Trip		.	.	.	.	.	.	.	.	.
Three pole trip		3	3	.	.	.	.	.	.	.
Single pole trip		1	.	.	.	.	.	.	.	.
				.	.	.	.	.	.	.
Current Rating				.	.	.	.	.	.	.
1 A		A		.	.	.	.	.	.	.
5 A		B		B	.	.	.	.	.	.
MOCT		C		.	.	.	.	.	.	.
Battery Voltage					.	.	.	.	.	.
Single supply					.	.	.	.	.	.
48/60 Vdc		1			.	.	.	.	.	.
110/125 Vdc		2			2	.	.	.	.	.
220/250 Vdc		3			.	.	.	.	.	.
					.	.	.	.	.	.
Dual supply					.	.	.	.	.	.
48/60 Vdc		4			.	.	.	.	.	.
110/125 Vdc		5			.	.	.	.	.	.
220/250 Vdc		6			.	.	.	.	.	.
						.	.	.	.	.
Distance backup protection						.	.	.	.	.
Backup protection		P				P	.	.	.	.
None		N				.	.	.	.	.
							.	.	.	.
Channel interface							.	.	.	.
9600 bps audiotone		A					A	.	.	.
British Telecom audiotone		B					.	.	.	.
56/64 kbps direct digital		D					.	.	.	.
56/64 kbps 820 nm multi-mode fiber		H					.	.	.	.
56/64 kbps 1300 nm single mode fiber		E					.	.	.	.
short reach (12 dB)							.	.	.	.
56/64 kbps 1300 nm single mode fiber,		M					.	.	.	.
medium reach (22 dB)							.	.	.	.
56/64 kbps 1300 nm single mode fiber,		L					.	.	.	.
long reach (32 dB)								.	.	.
								.	.	.
Test switches								.	.	.
FT – 14 test switches		F						F	.	.
No switches		N						.	.	.
									.	.
Remote communication device									.	.
RS-232C PONI		R							R	.
INCOM® PONI		C							.	.
RS-232C with IRIG-B PONI		B							.	.
										.
Digital fault recording		G								G
Accessories										
FT-14 Test plug										
Right side 1355D32G01										
Left side 1355D32G03										

SEPTEMBER 2000 (41-461M)

ABB Automation Inc.
Substation Automation and Protection Division
7036 Snowdrift Road
Allentown, PA 18106
USA
Tel: (610) 395-7333 1-800-634-6005
Fax: (610) 395-1055 email: powerful.ideas@us.abb.com web: www.abbus.com/papd