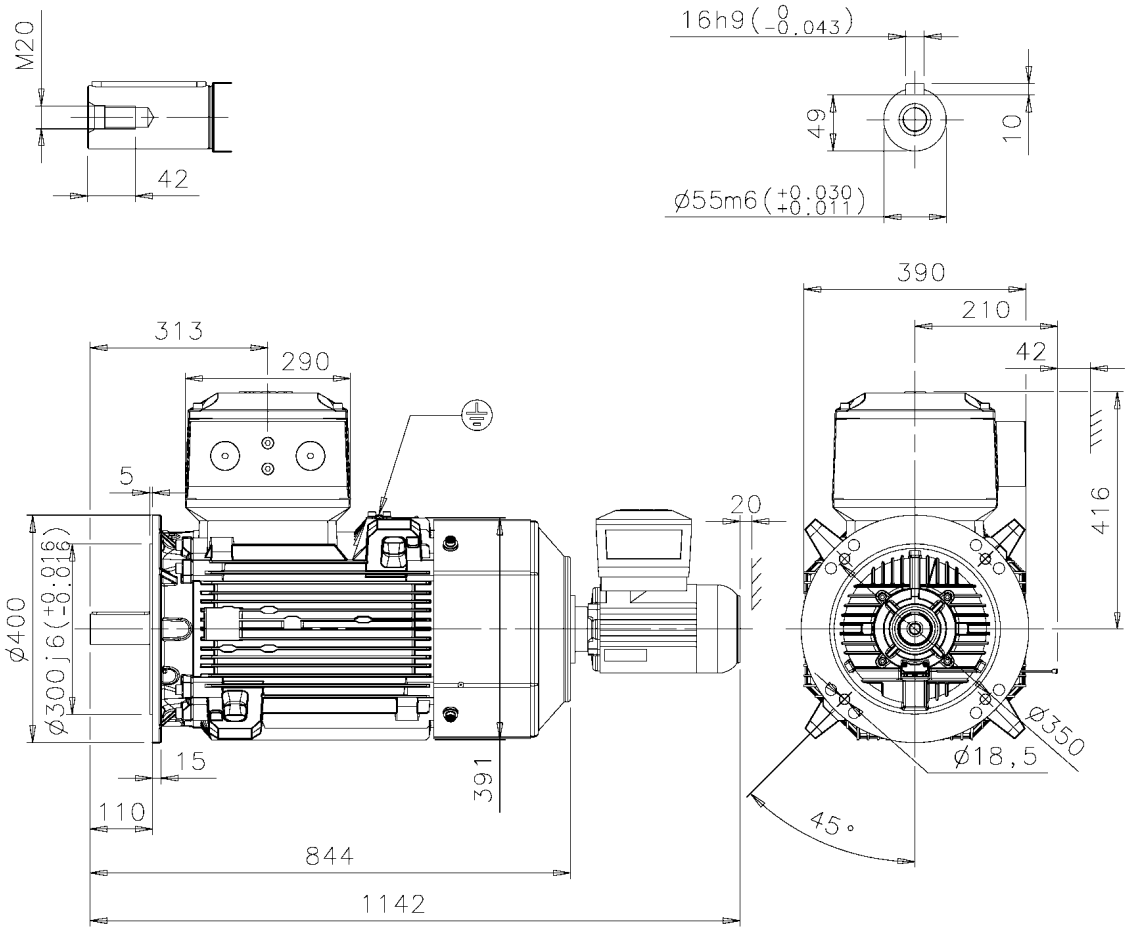


Additional information:

| | | |
|---|---|---|
| **Dimension Print** | Motor Type: M3JP 200ML_2-12 B5,V3 | Document No: 3GZF500220-74 A<br>14 JP 200 A |
| Description: SQUIRREL CAGE MOTOR WITH SEPARATE COOLING. | | |

| | | | | |
|---|---|---|---|---|
| Unit: | ABB Oy, Motors and Generators | Issued by: | A.Koski | Replaces: |
| Date: | 04.04.2013 | Approved by: | T.Moberg | Replaced by: |

| | | |
|---|---|---|
| **ABB Oy** | Customer Reference: | ABB |