Operating Instructions

42/11-39 EN

Temperature Transmitter TEU471, TEU471-Ex

rail mounted, intelligent, four-wire

Temperature Transmitter TEU471, TEU471-Ex

rail mounted, intelligent, four-wire

Operating Instructions

Document No. 42/11-39 EN
Date of issue: 11.2005
Revision: 04

Manufacturer

ABB Automation Products GmbH
Borsigstr. 2
63755 Alzenau
Germany

Tel: +49 551 905-534
Fax: +49 551 905-555
CCC-Support.deapr@de.abb.com

Contents

Important information

Symbols

In order that you can make the best use of this document and to ensure safety during commissioning, operation and maintenance of the equipment, please note the following explanation of the symbols used.

Explanation of the symbols used.

Symbol	Signal Word	Definitions
	DANGER	DANGER indicates an **imminently hazardous** situation which, if not avoided, **will result** in death or serious injury. (High level of risk.)
	WARNING	WARNING indicates a **potentially hazardous** situation which, if not avoided, **could result** in death or serious injury. (Medium level of risk.)
	CAUTION	CAUTION indicates a **potentially hazardous** situation which, if not avoided, **could result** in minor or moderate injury. (Low level of risk.)
	NOTICE	NOTICE indicates a **potentially harmful** situation which, if not avoided, **may result** in damage of the product itself or of adjacent objects. (Damage to property)
	INPORTANT	IMPORTANT indicates useful hints or other special information which, if not observed, could lead to a decline in operating convenience or affect the functionality. (Does not indicate a dangerous or harmful situation.)

As well as the instructions in this document, you must also follow the generally applicable accident prevention and safety regulations.

If the information in this document is insufficient in any situation, please contact our service department, who will be happy to help you.

Please read this document carefully before installation and commissioning.

Necessary documentation

Data Sheet 10/11-1.30 EN

1 General safety instructions

Important Instructions for Your Safety. Please read and observe.

Correct and safe operation of the transmitters TEU471 and TEU471-Ex, calls for appropriate transportation and storage, expert installation and commissioning as well as correct operation and meticulous maintenance.

Only those persons conversant with the installation, commissioning, operation and maintenance of similar apparatuses and who possess the necessary qualifications are allowed to work on the transmitters TEU471 and TEU471-Ex.

Please take note of
- **the contents of these Operating Instructions,**
- **the safety regulations affixed to the transmitters TEU471 and TEU471-Ex,**
- **the safety regulations pertaining to the installation and operation of electrical systems as well as**
- **the directives and guidelines on explosion protection.**

The user must ensure that units connected to the transmitter TEU471 and TEU471-Ex fulfil the appropriate requirements of the accident prevention regulations VBG4.

The directives, norms and guidelines mentioned in these Operating Instructions are applicable in the Federal Republic of Germany. When using the transmitters TEU471 and TEU471-Ex in other countries, please observe the national regulations prevailing in the respective country.

The transmitters TEU471 and TEU471-Ex have been designed and tested in accordance with IEC 1010-1 (correspond to DIN EN 61010-1 and DIN VDE 0411 part 1) "Safety requirements for electrical measurement, control and laboratory equipment", and have been supplied in a safe condition. In order to retain th is condition and to ensure safe operation, the safety instructions in these Operating Instructions bearing the headline "DANGER", „WARNING“, „CAUTION“ or „NOTICE“ must be observed. Otherwise, persons can be endangered and the transmitters themselvesas well as other equipment and facilities can be damaged.

If the information in these Operating Instructions should prove to be insufficient in any point, the ABB Service Department will be delighted to give you more information.

Declaration of conformity
The requirements of the European directive 72/23/EEC (PLV) are met.
The requirements of the European directive 94/9/EC (ATEX) are met.
The product conforms with the European Directive 89/336/EEC (EMC) and its amendments as it meets the requirements of the following standards:
- Interference emission: EN 50 081-1:1992
- Interference immunity: EN 50 082-2:1995
- Test: EN 61 000-4 Parts 2, 3, 4, 5 and 6.

2 Application and short description

The transmitter TEU471 (-Ex) serves to measure temperature and other process variables. It converts the input parameters into a load-independent DC (0/4...20 mA) or a direct voltage (0...10 V).

The transmitter is supplied either
– with standard parameters or
– with customer-specific parameters.

3 Installation and commissioning

When installing the TEU471-Ex, the the requirements for setting up of electrical apparatus in hazardous areas (DIN EN 60079-14) and the provisions of the EC type examination certificate (PTB 04 ATEX 2063) must be observed.

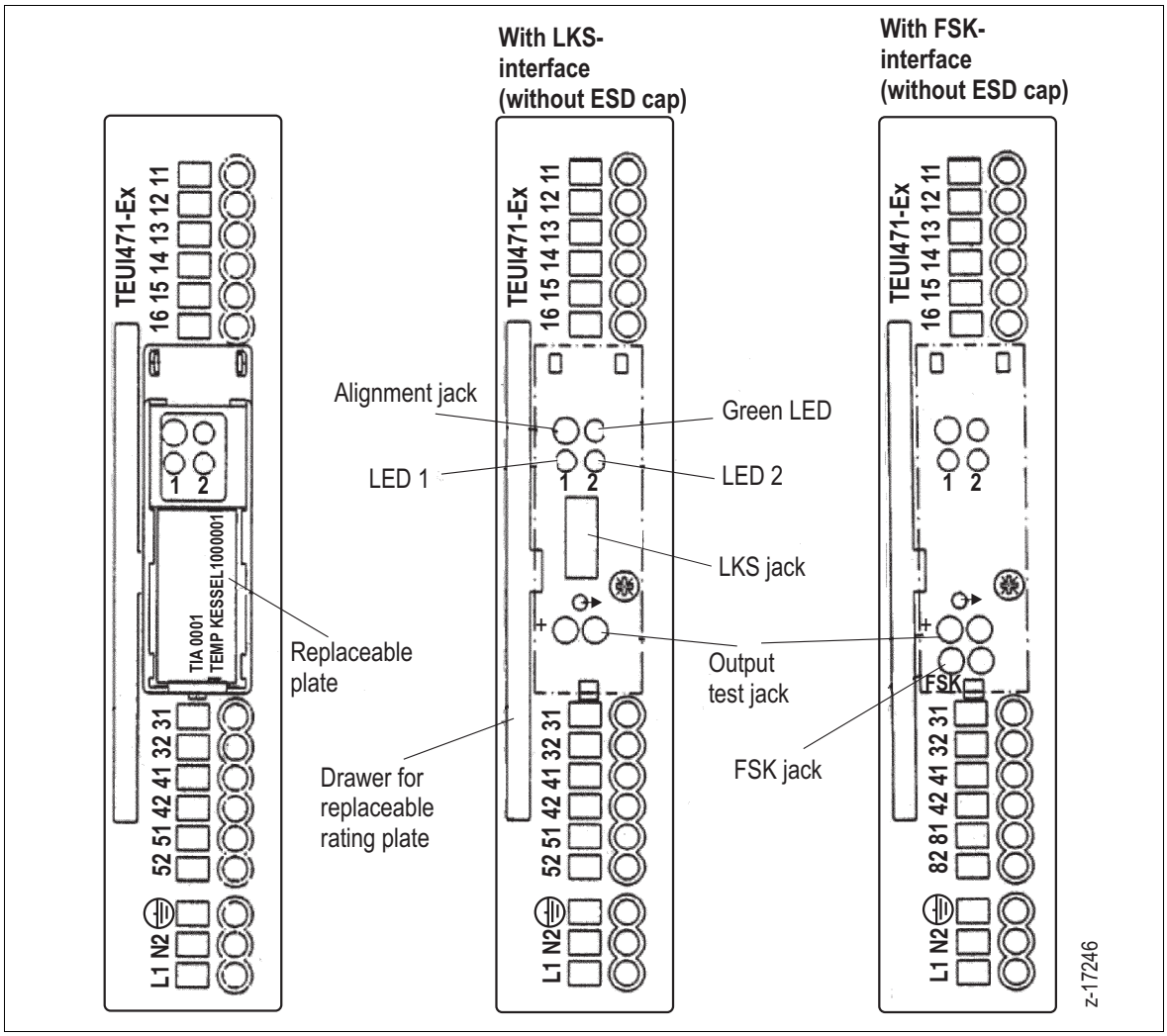

Fig. 3-1 Front view of TEU471 (-Ex)

Accessories supplied with the unit

A test jack for line compensation is supplied with the transmitter TEU471 (-Ex).

Rating plate labelling

Explanation of symbols	
	Additional insulation (DIN 30 600)
	Input (DIN 30 600)
	Output (DIN 30 600)
	Internal reference junction (DIN 30 600)
	Electrical power (DIN 30 600)
	Observe Operating Instructions! (DIN 30 600)
	Electrical apparatus tested for type examination certificate (DIN 40 012)
	Measured value constant (DIN 30 600) – last valid value held
	Measured value ascending (DIN 30 600) – overranging
	Measured value descending (DIN 30 600) – underranging
50 °C	Default value
LKS	LKS interface
FSK	FSK interface
2L/w/f	2-wire circuit
3L/w/f	3-wire circuit
4L/w/f	4-wire circuit

3.1 Mounting location

Position of use	Vertical
Ambient temperature	-10...+20...+55 °C
Condensation	none
Degree of protection	IP 20

The input circuit of the transmitter TEU471-Ex is approved for the intrinsic safety EEx ia IIC /IIB or EEx ib IIC/IIB types of protection. The input circuit may be set up within areas subject to explosion hazard under observance of the EC type examination certificate (PTB 04 ATEX 2063). Since only the input circuit is intrinsically safe, the transmitter TEU471-Ex must be installed outside the hazardous area.

3.2 Mounting the unit

(Dimensional drawings see Fig. 3-2)

DANGER

When installing the TEU471-Ex, the requirements for the setting up of electrical apparatus in hazardous areas DIN EN 60079-14 and the provisions of the EC type examination certificate (PTB 04 ATEX 2063) must be observed.

Snap the transmitter into position on the top-hat rail (EN 50022).

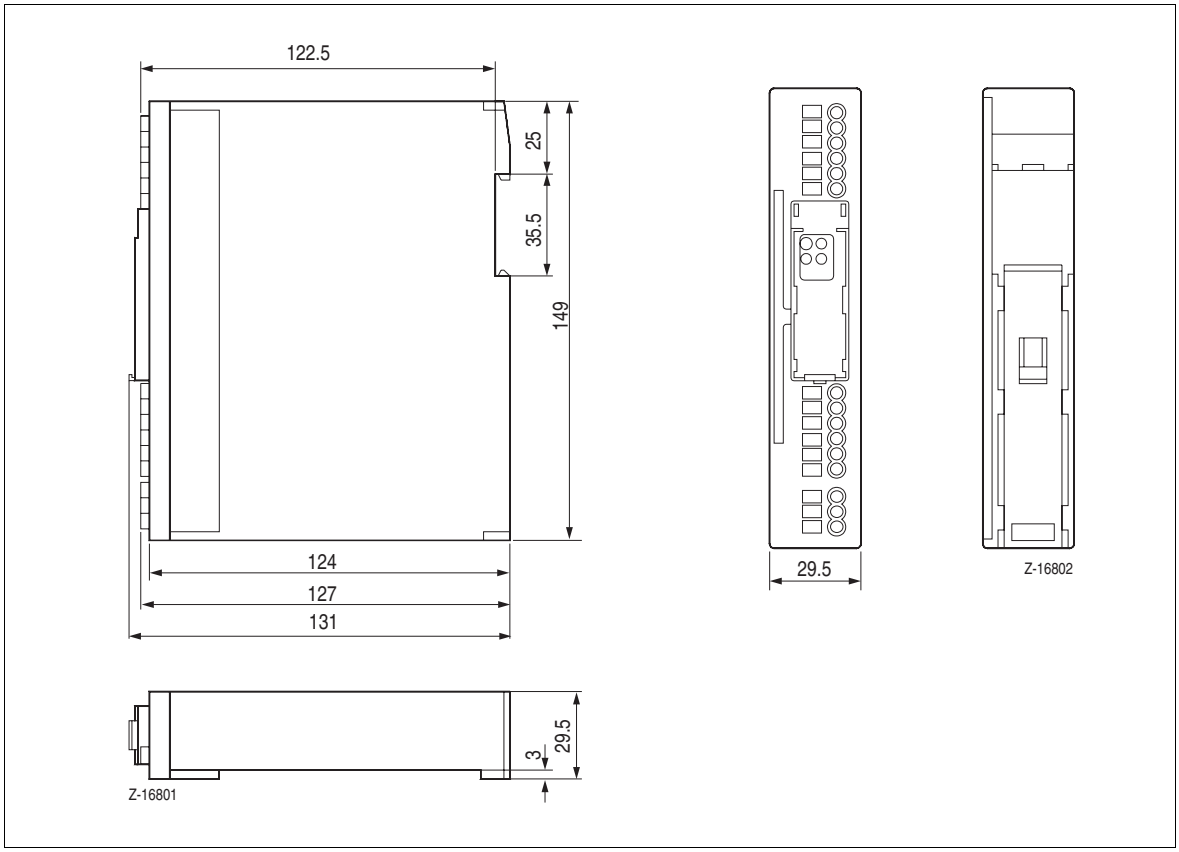

Fig. 3-2 Dimensional drawings

3.3 Connecting the unit

(see Fig. 3-3)

DANGER

Before all other connections are made the protective-conductor terminal must be connected to a protective conductor.
The apparatus can be dangerous if the protective conductor is interrupted inside or outside the apparatus or if the protective-conductor terminal is disconnected.

All pole disconnection must be provided in the mains supply line. This device may also disconnect a group of units if it has the requisite current and voltage carrying capacity.

Where a unit with a certified intrinsically safe output circuit is connected to the intrinsically safe input circuit of the transmitter TEU471-Ex, then evidence of the intrinsic safety of the connection must be provided DIN EN 60079-14.

If, for functional reasons, the intrinsically safe current circuit has to be earthed through connection to the equipotential bonding, it may only be earthed at one point.

Before switching on the apparatus make sure it is set to the voltage of the power supply.

The requirements of DIN VDE 0100 must be fulfilled when selecting the line material and laying the measuring and output signal lines. DIN EN 60079-14 must further be adhered to for the explosion-protected version.

– The wires (up to 2,5 mm², inclusive the thimbles) must be secured to the srew terminals as shown in the connection diagram.

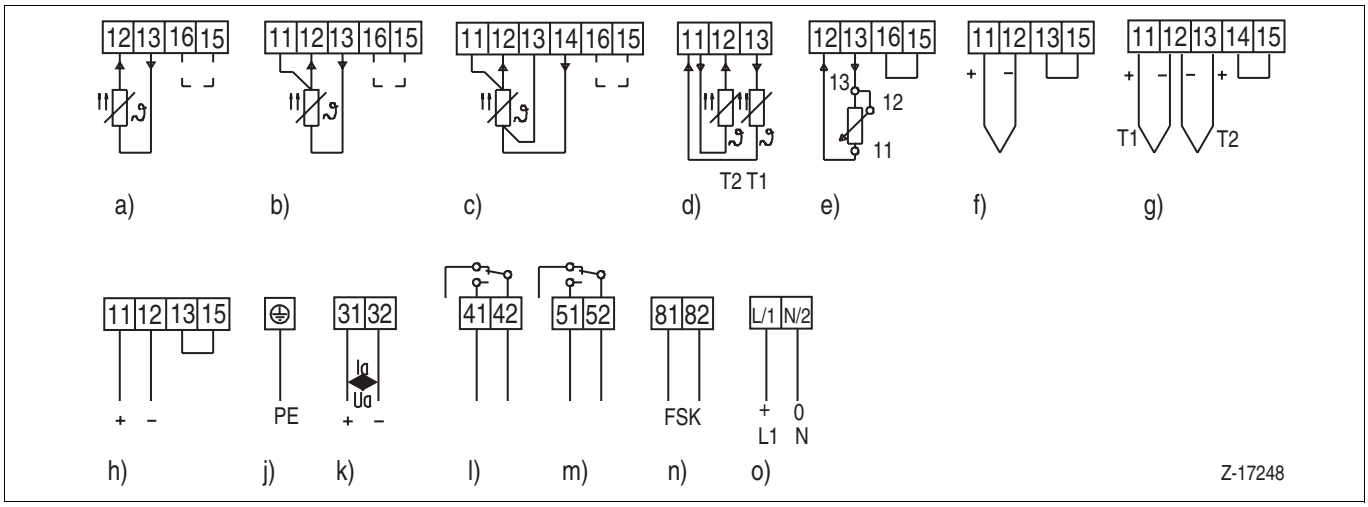

Fig. 3-3 Connection diagram
- a) Resistance thermometer or ohmmeter in 2-wire circuit (bridge for MK 42 or upper-range value > 391 Ω)
- b) Resistance thermometer or ohmmeter in 3-wire circuit (bridge for MK 42 or upper-range value > 391 Ω)
- c) Resistance thermometer or ohmmeter in 4-wire circuit. During thermocouple break monitoring open bridge BR30 (see Fig. 4-4 page 17). (bridge for MK 42 or upper-range value > 391 Ω)
- d) Resistance thermometer or ohmmeter in 2-wire circuit. Difference (TI - T2) or average value
- e) Resistance romote signalling unit in 2-wire circuit (bridge for MK 42 or upper-range value > 391 Ω).
- f) Thermocouple or mV measurement (with/without internal reference junction)
- g) Thermocouple or mV measurement. Difference (TI - T2) or average value
- h) Current or voltage measurement
- j) Grounding conductor
- k) Output signal current or voltage
- l) Binary output 1
- m) Binary output 2 (not with FSK version)
- n) FSK connection
- o) Power supply

3.4 Commissioning

WARNING

When the apparatus is connected to its supply, terminals may be live, and the opening of covers or removal of parts except those to which access can be gained by hand is likely to expose live parts.

Electrostatic energy first has to be discharged by operating personnel before opening the ESD [1] cap.

– Turn on the power supply. The green LED lights up to indicate the unit is ready for operation after approx. 4 s.

Signal	Green LED	Red LED
On	Unit ready for operation	Overranging, Underranging, Sensor fault, Unit fault.
Flashes slowly	Line compensation Unit fault	–
Flashes rapidly	External fault: sensor break sensor short-circuit	Line compensation with test jack
Off	Unit not ready for operation	Overranging, Underranging, Sensor fault, Unit fault.

Table 3-1 Signals of the green and red LEDs

[1] ESD = Electrostatical discharge

3.5 Line compensation

Line compensation is necessary if
– a resistance thermometer or ohmmeter is used in a 2-wire circuit
– carrying out measurements using a resistance romote signalling unit (2-wire circuit)

Line compensation is not necessary if
– a resistance thermometer or ohmmeter is used in a 3-wire circuit
  IMPORTANT
  It the line resistances are not the same for each wire than symmetry can be restored using the Device Management Tool DSV4xx (SMART VISION)
– a resistance thermometer or ohmmeter is used in a 4-wire circuit

Line compensation:

NOTICE

The connected sensors must be short-circuited before carrying out line compensation.

– **using Device Management Tool DSV4xx (SMART VISION)**:
  Select menu option: unit data / specialist / unit / compensation / **line compensation/-batancing**
  The Device Management Tool DSV4xx (SMART VISION) software provides additional information through-help texts.
– **using the test jack**
  (see Table 3-2)

Sequence	Signal		Waiting time	Description
	LED1 and LED2	Green LED		
Short circuit sensor	Dependent on parameterization	on or flashing (with active sensor short circuit monitoring)	–	Operational
Insert test jack	Flashes rapidly	Flashes slowly	< 1 s < 5 min	Analog output fixed Alarm value frozen
Remove test jack	Flashes rapidly	Flashes slowly	> 1 s < 10 s	Analog output fixed Alarm value frozen
Insert test jack	Flashes rapidly	on or flashing (with active sensor short circuit monitoring)	< 1 s < 5 min	Compensation starts
Remove jack	Flashes rapidly	on or flashing (with active sensor short circuit monitoring)	> 1 s < 10 s	–
Insert kack	Dependent on parameterization	on or flashing (with active sensor short circuit monitoring)	> 1 s < 10 s	Compensation data stored
Remove jack	Dependent on parameterization	on or flashing (with active sensor short circuit monitoring)	> 1 s < 10 s	Compensation completed
Remove sensor short circuit	Dependent on parameterization	on	–	Operational

Table 3-2 Line compensation with test plug

3.6 Adjustment

The transmitter TEU471 (-Ex) is supplied in an adjusted condition. Readjustment is only necessary:

- if resistances other than those specified are incorporated when modifying the measuring circuit combination
- if greater accuracy is required than that specified in the technical data (precision balancing of lower-range value and upper-range value)
- when switching the output from mA to V or vice versa.

The Device Management Tool DSV4xx (SMART VISION) provides information on adjustment.

Additional aids:
- Precision source (for the input)
- Measuring instrument (for the output).

4 Operation

The transmitter is controlled via the parameter setting program Device Management Tool DSV4xx (SMART VISION).

4.1 Write protection

In order to avoid unwanted parameter changes, the parameters are write-protected. The jumpers BR111 (write protection active) and BR110 (write protection inactive - standard setting) must be set as seen in Fig. 4-4.

The following interfaces are available, depending on the communication between the PC and the transmitter:

4.2 LKS interface

(LKS = Local Communication Interface)

(see Fig. 4-1)

DANGER
Potential separation is necessary with the LKS interface if the output is electrically connected to earth.

Operating apparatus:
– PC with Device Management Tool DSV4xx (SMART VISION)
– LKS adapter

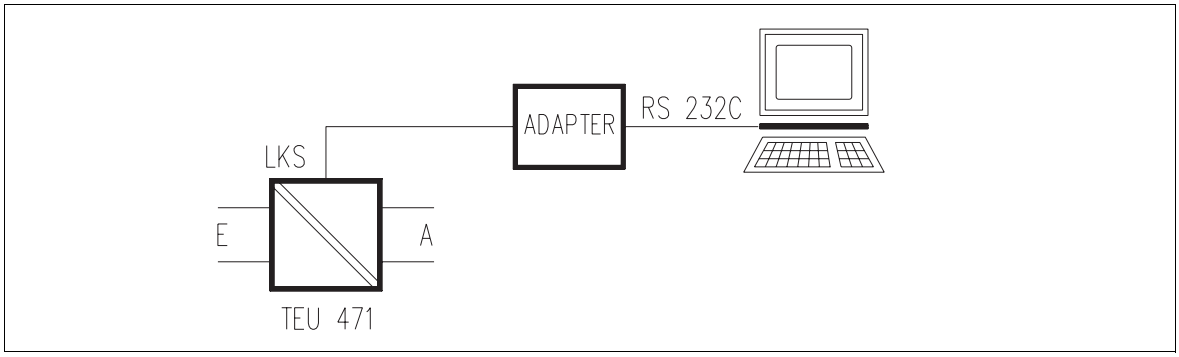

Fig. 4-1 PC communication with the LKS interface and LKS adapter

Both off-line and on-line communication are possible with transmitters with the LKS interface.

On-line communication
– Transmitter operational

Off-line communication
– Transmitter not operational

Important
The transmitter can be parameterized without power supply.

4.3 FSK interface

(FSK = Frequency Shift Keying)
(see Fig. 4-2)

Operating apparatus:
– PC with Device Management Tool DSV4xx (SMART VISION)
– FSK modem with terminal leads

Only on-line communication is possible with transmitters with the FSK interface. The FSK interface may be operated within a bus.

4.4 FSK bus

(see Fig. 4-3)
The FSK plug-in sockets on the transmitter front panel enable stand-alone operation, i.e., the FSK connection to the terminal level is interrupted.
The transmitter is factory-set to the bus address 00000:00. This address does not permit bus operation. Bus operation is only possible if set to ≠ 00000:00. Setting of the bus address is described in the Device Management Tool DSV4xx (SMART VISION).
Further technical information is provided in Data Sheet 10/63-6.71 EN.

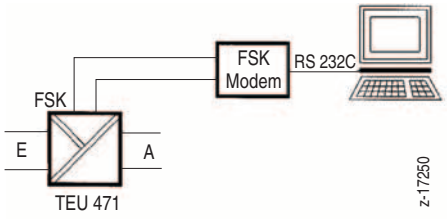

Fig. 4-2 PC communication with the FSK interface and FSK modem

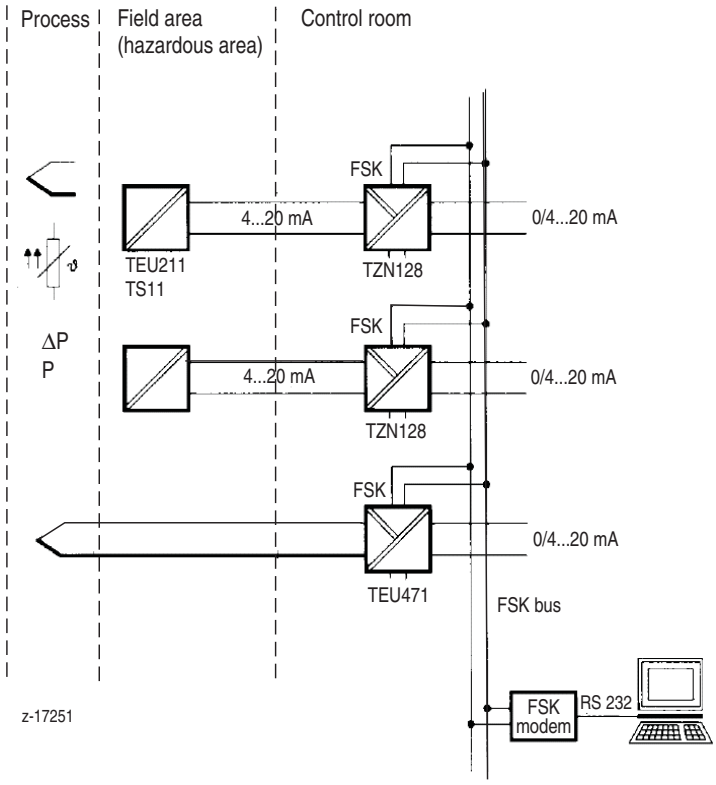

Fig. 4-3 PC communication with the FSK bus (example)

4.5 PC and Notebook requirements

See Data Sheet 10/63-1.20 EN

4.6 Device data

The device data of the transmitter are set according to the customer requirements (customized parameter definition) or according to the manufacturer's specifications (standard parameter definition, see Table 4-1)

Measuring circuit combination	MK 41/42	MK 44	MK 45
No. of measuring points	-/-	-/-	-/-
Description of measuring points	-/-	-/-	-/-
Bus address	00000:00	00000:00	00000:00
Type of measurement	Simple	Simple	Simple
Sensor	Pt 100, 3-wire circuit	V-linear	mA-linear
Measuring range	0...100 °C	0...10 V	0...20 mA
Output	4...20 mA	4...20 mA	4...20 mA
Underranging value	3.6 mA	3.6 mA	3.6 mA
Overranging value	22 mA	22 mA	22 mA
Output behaviour in the event of sensor fault	overranging	–	–
Damping	0.9 s up to software version 3 0.5 s from software version 4	0.9 s up to software version 3 0.5 s from software version 4	0.9 s up to software version 3 0.5 s from software version 4
LED1/Binary output 1 Assignment Behaviour Circuit Switching point	 Sensor fault – Load current –	 Alarm value min. Load current 0 V	 Alarm value min. Load current 0 mA
LED2/Binary output 2 Assignment Behaviour Circuit Switching point	 Alarm value max. Load current 100 °C	 Alarm value max. Load current 10 V	 Alarm value max. Load current 20 mA

Table 4-1 Standard parameters

4.7 Conversion

(see Fig. 4-4 and Fig. 4-5)
The transmitter can be modified to perform another measurement task. The following can be changed:
- the measuring circuit combination
- the power supply
- the output signal
- the binary signall

It is not possible to change the interface.

NOTICE
The catalog number (P ...) on the rating plate describes the hardware configuration. This number is also stored in the transmitter. When changing the hardware, which also necessitates a change in the catalog number, this must be stored in the transmitter using the Device Management Tool DSV4xx (SMART VISION). No plausibility check is carried out for the modification. This change must be indicated on the rating plate.

4.8 Changing the measuring circuit combination

Changing from MK 41 to MK 42 or vice versa is carried out with the parameter setting program Device Management Tool DSV4xx (SMART VISION) (no hardware access). See the connection diagram.

The following resistors or bridges have to be changed to yield further variations (see Table 4-2).

MK	Jumper Br 3	Resistor R 50	Resistor R 51
MK 41/42	closed	–	–
MK 44	open	99 kΩ	1 kΩ
MK 45	closed	–	5 Ω

Table 4-2 Jumper assignment

All resistors are metal film resistors of DIN size 0207, tolerance ≤ ± 0.1 % and TK ≤ 15 ppm.

4.9 Changing the power supply

NOTICE

When changing the power supply the rating plate must be changed correspondingly.

The 230 V AC version may be changed to a 24 V UC version.
The 115 V AC and 24 V UC versions cannot be changed.

Power supply	Plug-in jumper BR 201	Jumper BR 202	Jumper Br 203
24 V UC	in position	closed	closed
230 V AC	open (parked)	open	open

Table 4-3 Jumper assignment

4.10 Changing binary signals

The relays for the binary signals (1 or 2) are provided on a special printed circuit board. This pcb must be slotted into the allocated slot. With the FSK version, only binary signals are possible. The digital outputs can be voltage-free NO or NC contacts. However, only one terminal pair per digital output is available. The solder bridges seen in Fig. 4-5 allow for switch-over.

	Jumper BR120	Jumper BR121	Jumper BR122	Jumper BR123
Binary output 1 as NO contact (standard)	closed	open		
Binary output 1 as NC contact	open	closed		
Binary output 2 as NO contact (standard)			closed	open
Binary output 2 as NC contact			open	closed

Table 4-4 Jumper assignment

4.11 Thermocouple break monitoring activate for 4-wire circuit

(Measuring circuit combination 41/42 - resistance measurement)

For 2-wire and 3-wire circuits the line break detection function is active when the jumper ST30 is in the "1" position.

If line break detection is desired for a 4-wire circuit, the jumper ST30 must be set to the "0" position. 2-wire- and 3-wire circuits are only possible in the "1" position.

4.12 Changing the output signal

Output signal	Jumper BR 101	Jumper BR 104	Jumper BR 105	Jumper BR 106	Jumper BR 107	Jumper BR 108
0/4...20 mA (Load 700 Ω; test jack active)	closed	open	open	closed	open	open
0/4...20 mA (Load 750 Ω; test jack inactive)	closed	closed	open	closed	open	open
0...10 V	open	closed	closed	open	closed	closed

Table 4-5 Jumper assignment

IMPORTANT
Re-adjustment is necessary if switching from V to mA or vice versa.

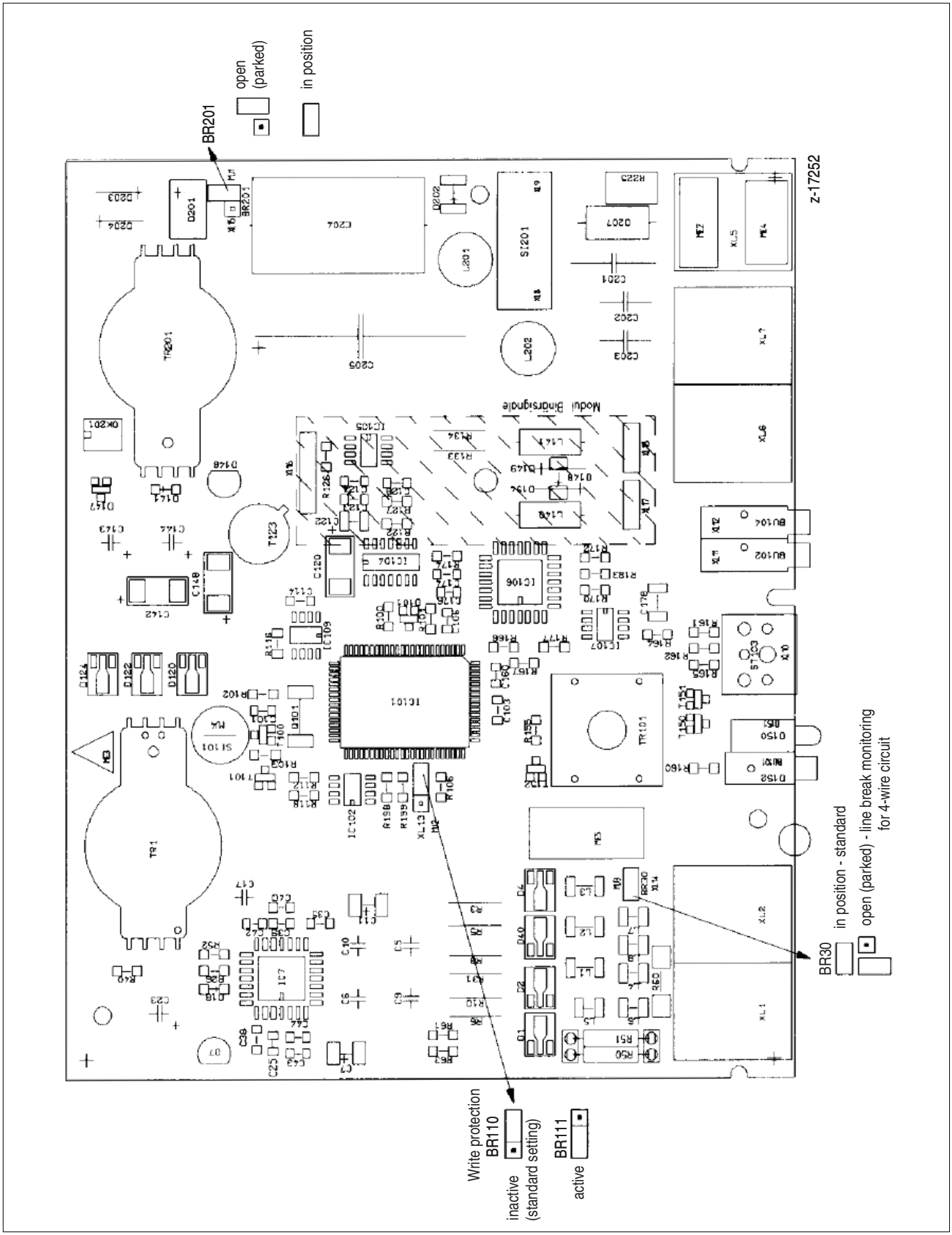

Fig. 4-4 Motherboard (componet side)

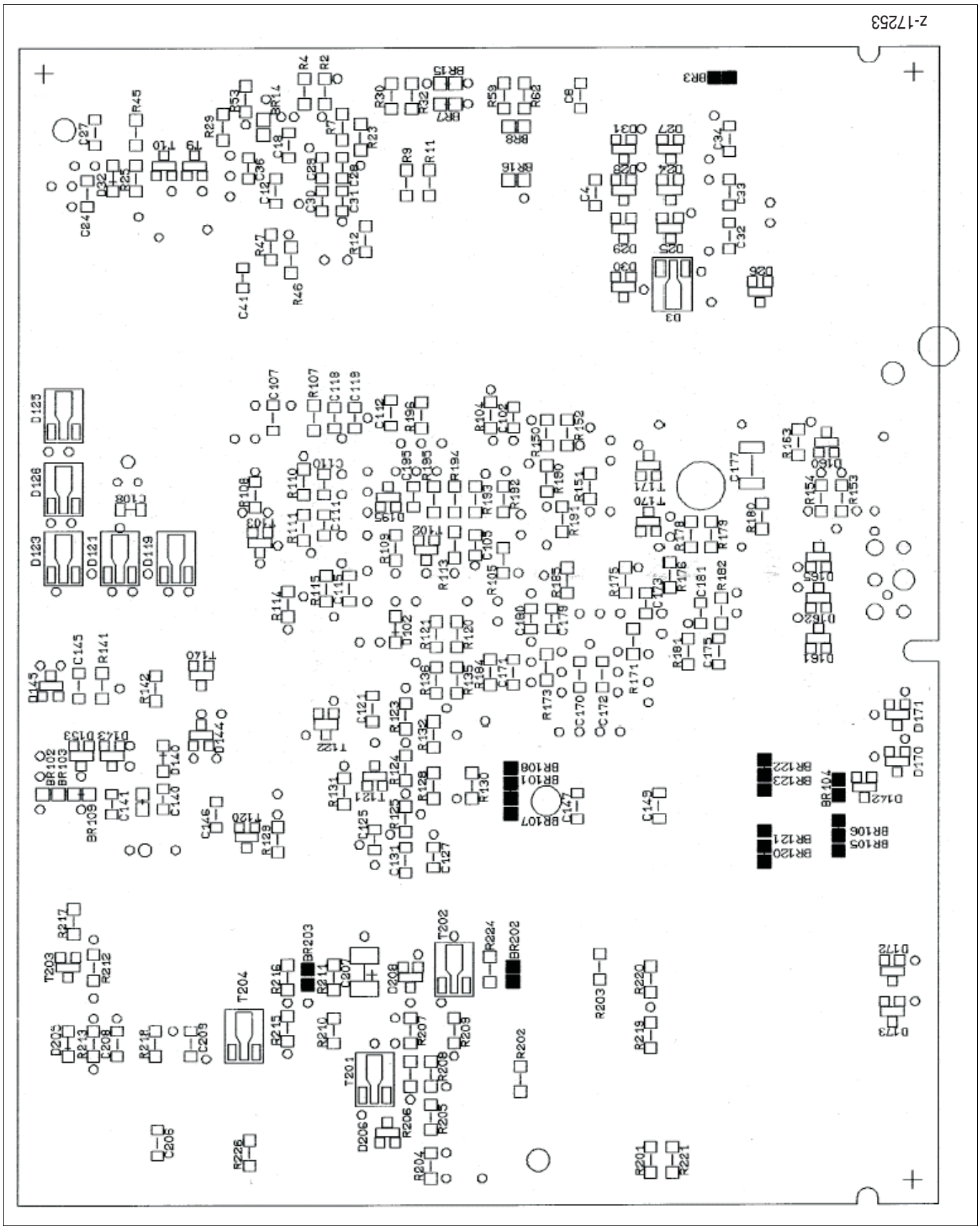

Fig. 4-5 Motherboard (solder side)

5 Maintenance

Check the housing, the cables, the cable glands, the potential equalization line, etc. at sufficiently short intervals for possible damage, depending on the load to which they are exposed during operation.

If any of the parts that are relevant for the device protection (e.g. any of the housing panels, the cable glands, the cover thread, etc.) should be defective, put the device out of operation immediately and disconnect it from power. Do not return it to operation unless it is fully operational again.

5.1 Safety instructions for working on transmitter TEU471 and TEU471-Ex

WARNING

When the apparatus is connected to its supply, terminals may be live, and the opening of covers or removal of parts except those to which access can be gained by hand is likely to expose live parts.

Before starting any commissioning or repair work requiring the device to be opened, always make sure that the device is fully disconnected from power.

Capacitors inside the unit may still be charged even if the unit has been disconnected from all voltage sources.

Whenever it is likely that protection has been impaired, the unit shall be made inoperative and be secured against any unintended operation.

It must be assumed that the protection has been impaired when
- **it shows visible signs of damage**
- **it no longer functions**
- **it has been stored for long perlods under unfavourable conditions**
- **it has been subjected to adverse transport conditions.**

Only fuses of the specified type and rated current may be used as a replacement. Makeshift fuses must not be used.
The fuse-holder may not be short-circuited.

The power supply fuse is on the motherboard. Only M 0.1 C fuses may be used (for all forms of power supply).

5.2 Additional safety instructions for working on transmitter TEU471-Ex

DANGER

Before beginning work on the instrument, the safety measures pertaining to the explosion protection must absolutely be borne in mind.

Components determining the explosion protection must only be replaced by components of similar quality, which are certified if necessary.

If a part of the device which determines the explosion protection has been repaired it may only be placed in operation again after an expert has checked it and certified that it complies with the explosion protection requirements. This check is not necessary if the work has been performed by authorized ABB personnel.

The transmitter TEU471 (-Ex) does not require any maintenance. In the event of errors, the power source should first be inspected, then the source, connection leads and output circuit.

Diagnostic functions can be effected with Device Management Tool DSV4xx (SMART VISION). See menu branches: "Measured value display", "Device status", "Self test".

6 Appendix

6.1 Description

(see Fig. 6-1)

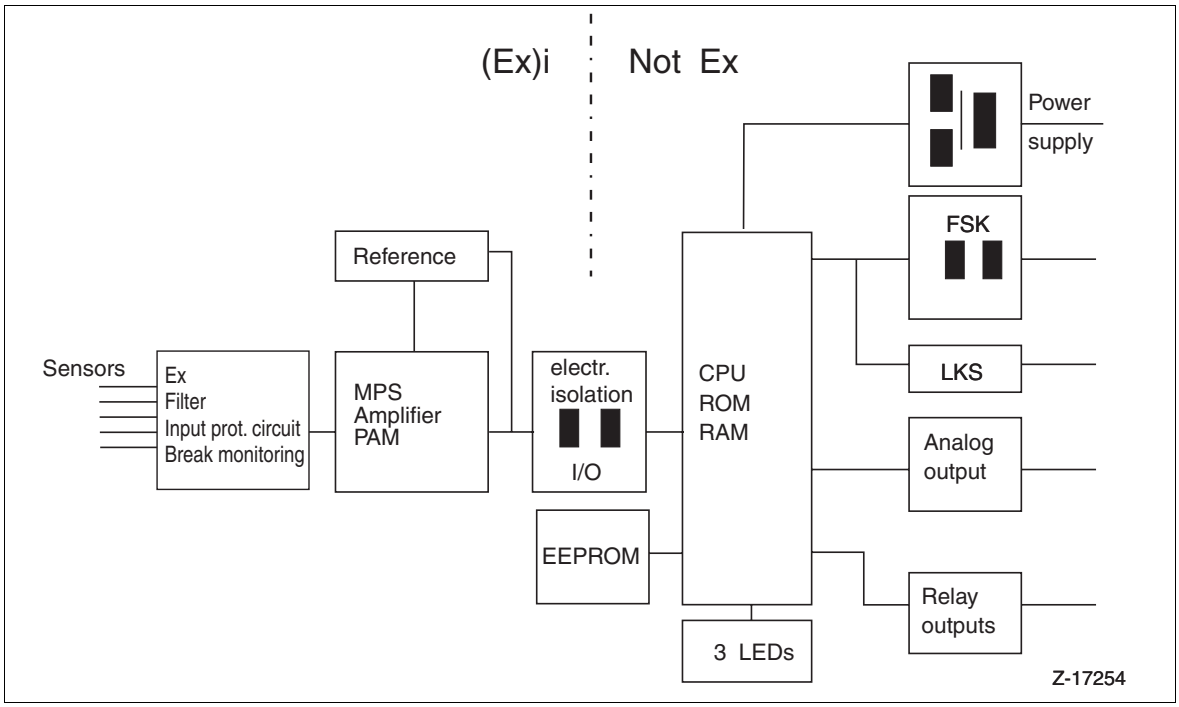

Fig. 6-1 Functional diagram

The input signals are fed to the measuring point selector (MPS) via the input protection circuit. The standard input parameters (mV, Ω, V, mA) can be matched to the input voltage range of the amplifier through a filter network. The amplifier converts the low input voltage to the working range of the A/D converter.

The pulse-amplitudle modulator (PAM) converts the voltage from the amplifier into a mark-space ratio. Correction values for the zero point and slope are determined from the test measurements (zero point and reference) and stored. The (sensor) break monitoring checks the sensor impedance to a maximum value. The input signal is fed with electrical isolation to the CPU. The CPU is the central component of the transmitter and fulfils a number of functions.

The following routines
- Monitoring (dead man, watchdog)
- A/D converter (read-in, plausibility checks, ...)
- Communication (reading, writing)
- Measured value processing (linearization, damping, ...)
- Self-test

are called up in succession.

The EEPROM contains data which describe the transmitter at its installation site. This type of data includes all user-specific parameterization data (e.g. measuring range, linearization, measuring point number). The EEPROM also contains data which only relates to the particular transmitter, e.g. deviations from reference values or the F-number.

The ROM contains the firmware of the transmitter. Either the LKS interface (3 V CMOS) or the FSK interface (electrically isolated) is used for communication with the PC.
Power is supplied via a transformer with an electrically isolated output voltage.

6.1.1 Function modules

(see Fig. 6-2)
The function modules shown below are configured through the Device Management Tool DSV4xx (SMART VISION) according to the measurement task.
The "readable variables" are displayed in the menu option "Diagnosis".

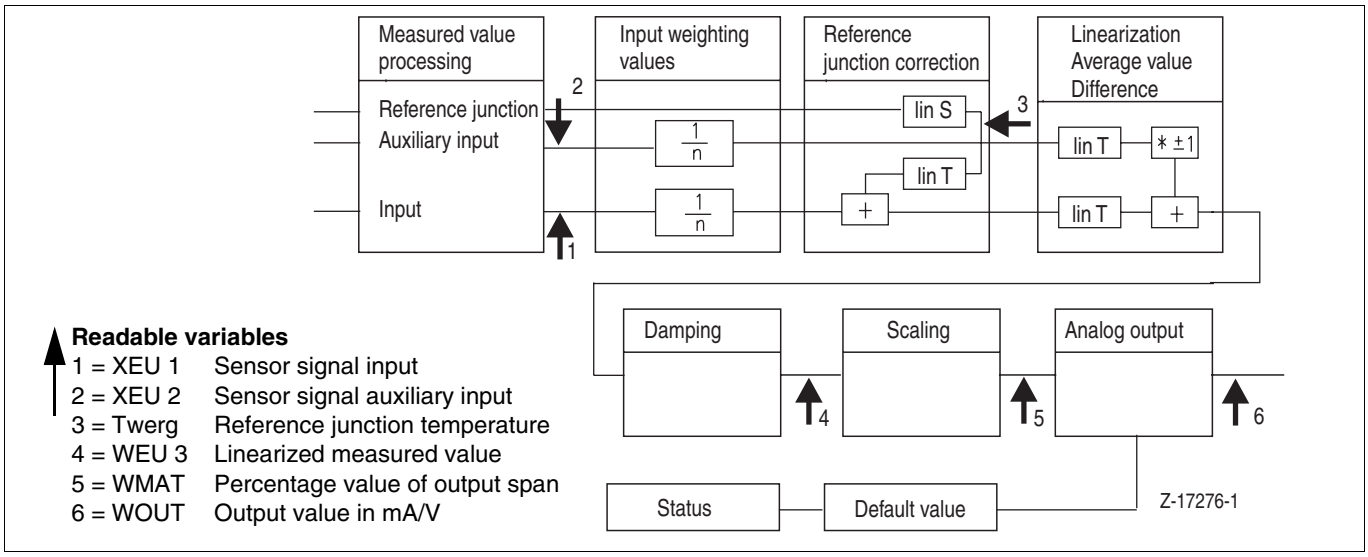

Fig. 6-2 Function modules

6.1.2 Measured value processing

Measuring range setting (measuring circuit selection and sensor selection); sensor monitoring (break and short-circuit); reference junction measurement for the internal reference junction temperature.

6.1.3 Input weighting values

Average value derivation by linking several sensors to one input; simulation of sensor characteristics trom the same basic data (e.g. Pt 1000 from the Pt 100 characteristics - 10 × Pt 100)

6.1.4 Reference junction compensation

Correction of the measured value for the internal/external reference junction in thermocouple measurement

6.1.5 Linearization/average value/difference

According to standardized or customer-specific characteristics (max. 32 coincidence points); average value/difference from input and auxiliary input. The characteristics of the standardized sensors are saved in the transmitter.

6.1.6 Damping

Filter with 1st order delay

6.1.7 Scaling

Lower-range value and upper-range value

6.1.8 Analog output

Output signal adjustment for current/voltage, over- and underranging, behaviour in the event of sensor or unit fault

6.1.9 Binary signals

(not shown in the Figure)
Assignment of LED 1 + 2, binary outputs 1 + 2 for signalling of sensor, apparatus and alarm value errors.

6.2 Technical data

Input

Max. potential
230 V AC [1)]

Resistance thermometers in
2-, 3- and 4-wire circuits

Thermocouples
Without/with internal or external reference junction

Resistance romote signalling unit
Ω, mV, mA, V sources

Measurement options

Simple:	1 Sensor at input
Average value:	1 Sensor at input and 1 Sensor at auxiliary input or 2...10 Sensors in series at input
Difference:	1 Sensor at input and 1 Sensor at auxiliary input

(Average value and difference only for mV and Ω sources MK 41 in 2-wire circuit)

Measuring range	Ω:	$R_{m1} + 2R_{L1} + R_{m2} + 2R_{L2} < 415\ \Omega$ [2)]
	Pt 100:	$(T_1 + T_2)_{max} < 500\ °C$
	Ni 100:	$(T_1 + T_2)_{max} < 250\ °C$

Measuring circuit combinations MK

Measuring circuit combination	Complete span	Minimum span
MK 41	0...391 Ω -8...+120 mV	6.7 Ω 2 mV
MK 42	0...3250 Ω -8...+120 mV	58 Ω 2 mV
MK 44	-0.8...+12 V	0.5 V
MK 45	-1.6...+24 mA	1 mA

Measuring range
may be parameterized

Measuring curren
MK 41: approx. 0.29 mA
MK 42: approx. 35 µA

Input resistance
MK 44: 100 kΩ
MK 45: 5 Ω

Overload limit [1)]
Thermocouple-/mV measurement (MK 41/MK 42)
-0.5...+3.5 V
Resistance thermometer and resistance measurement (MK 41/MK 42)
Open or short-circuited input permitted
Voltage measurement (MK 44) -50...+100 V
Current measurement (MK 45) -100...+100 mA

Sensor monitoring
mV measurement
Break: response threshold > 1.5 MΩ
or gradient < -3 mV/s / gradient > +3 mV/s
or < -8mV / > +120 mV

Ω measurement
Response threshold for sensor breaks: MK 41 > 391 Ω;
MK 42 > 3250 Ω
Response threshold for short-circuits: < 5 Ω

[1)] For TEU471-Ex observe the EC type examination certificate!
[2)] R_m = measuring resistance; R_L = line resistance of a conductor

Line resistance
(R_m = measuring resistance; R_L= line resistance of a conductor)

2-wire circuit
Max. 10 Ω for both conductors
with MK 41 (average / difference): $R_{m1} + (2R_{L1}) + R_{m2} + (2R_{L2}) < 415\ \Omega$

3-wire circuit
Max. 10 Ω per conductor

4-wire circuit
Max. 50 Ω per conductor
with MK 41: $(R_m + R_L) < 415\ \Omega$

Internal reference junction
In-built Pt 100 in 2-wire circuit

Linearization
As per DIN IEC standardized characteristics
Resistance thermometers: Pt 100, Ni 100
(Extended to e.g. Pt 1000, Ni 50, by means of weighting Pt 100, Ni 100)
Thermocouple types: B, E, J, K, L, N, R, S, T, U or customerspecific (max. 32 coincidence points)

Input weighting values
n = 1, 2, 3, 4, 5, 6, 7, 8, 9, 10
(for resistance measurement additionally n = 0.5)

Damping
Filter with first order delay (τ = 0 s, 0.9...100 s)

Output

Max. potential
50 V AC

Output signal (rising/falling)
0/4...20 mA (open output permitted)
Load ≤ 700 Ω test jack active
≤ 750 Ω test jack not active
0...10 V (short-circuit proof)
Load > 10 kΩ

Residual ripple ≤ 0,5 %

Control range (parameterizable)

Underranging
-0.2...0/4 mA (test jack not active)
-0.1...0/4 mA (test jack active)
-0.1...0 V

Overranging
20...23.6 mA
20...22 mA (with load ≥ 600 Ω or 2 binary outputs)
10...11.8 V
10...11 V (with 2 binary outputs)

Output action in the event of a fault

Type of fault
Sensor fault or sensor/device fault

Underranging
(= user underranging)

Overranging
(= user overranging)

Default value
Parameterizable (-0.2...23.6 mA, -0.1...11.8 V) [3)]

Hold last valid value

[3)] Can also be parameterized via the control range set (e.g. for overranging/underranging signal)

Relay output

1 or 2 relays with NO contact

Switching capacity $P_{max.}$ = 10 W, 10 VA; cos $\varphi \geq 0.7$; L/R $\leq$ 7 ms

Switching current $I \cong_{max.}$ = 0.5 A

Switching voltage $U \cong_{max.}$ = 50 V

Damping

Filter with delay

1st order delay (τ = 0; 0.9...100 s up to software version 3)
(τ = 0; 0.5...100 s from software version 4)

Time constant τ set to	Response time T (up to software version 3)	Response time T (from software version 4)
0 s	typ. 0.8, max 1 s	
0.5 s	-	ca. 1.8 s
0.9 s	ca. 2.7 s	ca. 3.7 s
1 s	ca. 3.3 s	ca. 4.2 s
1.5 s	ca. 5.8 s	ca. 6.5 s
2 s	ca. 8.2 s	ca. 8.8 s
> 5 s	1 + 4.6 × τ	

Interfaces

Lokal Communication Interface (LKS)

for workshop parameterization (power supplied from PC)

Frequency Shift Keying (FSK)

for remote parameterization and bus operation

Data formatt

HART protocol

Power supply

Supply voltage

24 V UC ,
115 V AC
230 V AC (switchable to 24 V UC) [4)5)]

Alternating voltage

-15...+10 %; 48...62 Hz

Direct voltage

18...33 V

Residual ripple

$\leq$ 20 % within the tolerance range

Power consumption

24 V UC: ca. 1.2 W, 1.5 VA
115 V AC: ca. 2 W, 5 VA
230 V AC: ca. 2 W, 8 VA

Characteristics under rated conditions (accord. to IEC 770)

(MV = measured value; K1, K2, K3 see table)
(Examples of calculations, see Data Sheet 10/11-1.02 EN)

Measuring deviation (with respect to the span set,)

0.1 % × MV + 0.1 % + K1
Additional error for internal reference junction: 0.25 K
Additional error with MK 44, MK 45: 0.1 % × MV

Conformity error (contained within the measuring deviation)

0.1 % + K2

[4)] Conforms to NAMUR under mains interruption only for 230 V AC
[5)] At switch-over on 24 V UC: direct voltage range 19.2...33 V

	K1	K2	K3
Ω (MK 41)	80 mΩ	20 mΩ	10 mΩ
Ω (MK 42)	0.75 Ω	0.2 Ω	0.09 Ω
mV (MK 41/42)	10 µV	5 µV	2 µV
V (MK 44)	1 mV	0.5 mV	0.2 mV
mA (MK 45)	2 µA	1 µA	0.4 µA
Resistance thermometer (MK 41)	0.25 K	0.05 K	0.063 K
Resistance thermometer (MK 42)	0.25 K	0.05 K	0.1 K
Thermocouple > -150 °C except type B (MK 41/MK 42)	10 µV [6] + 0.2 K	10 µV [6] or 0.2 K (greater value holds)	2 µV [6]
Thermocouple Typ E, K, N, T -250...-150 °C Typ B > 300 °C (MK 41/MK 42)	10 µV [6] + 0.6 K	10 µV [6] or 0.6 K (greater value holds)	2 µV [6]

Effects

Ambient temperature (with respect to the span set)
(0.05 % × MW + 0.05 % + K3) / 10 K
with an internal reference junction additionally h 0.1 K / 10 K

Power supply (with respect to the span set)
< 0.05 % for 10 % voltage variation
< 0.05 % for 48...62 Hz frequency change

Influence on the output (with respect to the output span)
Effect on current ≤ 0.1 % in load range 0...700 Ω
Effect on voltage ≤ 0.1 % from 10 kΩ...∞

Parasitic voltage in input (with respect to the span set)
50 Hz symmetrical
< 0.5 % for $U_{para.\ (ss)}$ = 0.3 × span (τ = 0 s)
(elevated residual ripple)
< 0.5 % for $U_{para.\ (ss)}$ = 4 × span [7]

50 Hz unsymmetrical (to U_{eff} = 250 V) (for TEU471)
< 0.006 % × full scale / span [7]
< 0.05 % × full scale / span (τ = 0 s)

DC component of fault voltage (to U- = 250 V DC)
< 0.006 % × full scale / span [7]
< 0.05 % × full scale / span (τ = 0 s)

Time behavior

Response time (damping not active)
Typically 0.8 s (1 s max.)

Electromagnetic compatibility (EMC) according to DIN EN 61326

General immunity to interference meets NAMUR recommendations for:
– mains supply tolerances
– mains interruption (max. 1 relay active)

[6] Insert temperature value which corresponds to the slope of 10 µV or 2 µV at the measurement point.
[7] up to ofware version 3 (t ≥ 0.9 s)
from software version 4 (t ≥ 0.5 s)

General and safety data

Environment conditions

Climatic category
JSF to DIN 40 040

Ambient temperature
-10...+20 °C...+55 °C

Transportation and storage temperature
-25...+85 °C

Relative humidity
≤ 75 %

Condensation
None

Mechanical stress

Tested
to DIN IEC 68 Part 2-27 and DIN IEC 68 Part 2-6

During transportation
Shock 30g/18 ms

During operation
Vibration 2g / ± 0.15 mm / 5...150 Hz 3 × 5 cycles
Vibration 2g / ± 10 mm / 1...35 Hz 3 × 1 cycle

Connection, housing and mounting

Electrical connections	Srew terminals for 2.5 mm²
Degreee of protection (DIN 40 050)	IP 20
Class of protection accord. to IEC 1010-1 (correspond to DIN EN 61010-1 and DIN VDE 0411 part 1)	I
Degree of contermination	II
Overvoltage category	II Input/output III Mains
Test voltage accord. to IEC 1010-1 (correspond to DIN EN 61010-1 and DIN VDE 0411 part 1)	Mains against input/output 3.71 kV [8)] Input against output 3.71 kV Outputs against each other 0.75 kV Input/output/mains against protective conductor 1.5 kV
Material	Polycarbonate GR
Color	RAL 7032
Position of use	Front panel vertical
Weight	approx. 0.8 kg

[8)] Diconnect Y capacitors

Explosion protection

EC type examination certificate
PTB 04 ATEX 2063

Ex identification acc. to directive 94//9/EC
TEU471-Ex.A Ⓔx II (1) GD [EEx ia] IIC / IIB or
TEU471-Ex.B Ⓔx II (2) GD [EEx ib] IIC / IIB

Input circuit
Type of protection intrinsic safety EEx ia IIC/IIB or EEx ib IIC/IIB

Ambient temperature
Max. +55 °C

Mounting
Outside the hazardous area

Maximum transmitter values and permitted connection data see table and EC type examination certificate

Maximum values of the transmitter	Resistance measurement		Thermocouple measurement	
	Ex. A	Ex. B	Ex. A	Ex. B
R	1506 Ω	1506 Ω	1506 Ω	1506 Ω
U_O	8.9 V	8.9 V	8.9 V	8.9 V
I_K	23.9 mA	23.9 mA	23.9 mA	23.9 mA
P	160 mW	160 mW	160mW	160 mW
L_i	330 µH	500 µH	330 µH	500 µH
C_i	397 nF	500 nF	397 nF	500 nF
Perm. L_a } II B	4.6 mH	4.5 mH	see EC type examination certificate	
Perm. C_a } II B	3.7 µF	3.6 µF		
Perm. L_a } II C	1.6 mH	1.5 mH		
Perm. C_a } II C	480 nF	380 nF		

6.3 Packaging

Packaging for transport or return to the manufacturer

If the original packaging material is no longer available, wrap the device in a padded plastic film or corrugated paper board and place it in a box of sufficient size lined with a shock-absorbing material (e.g. foam rubber). The thickness of the shock-absorber should be in accordance with the device weight and the type of shipment.

The box must be handled with care and has to be labeled accordingly.

For overseas shipment always add a desiccant (e.g. silica gel) and wrap the device and the desiccant bag in apolyethylene foil of 0.2 mm. Adapt the amount of desiccant to the packing volume and the expected transport time (at least sufficient for 3 months). Additionally line the box with a layer of union paper.

6.4 Accessories

Accessories	Catalog number
Set of resistors for changing the measuring circuit combinations	345838
Module with 1 relay output	345825
Module with 2 relay outputs	345826

ABB has Sales & Customer Support
expertise in over 100 countries worldwide.

www.abb.com/instrumentation

Printed in the Fed. Rep. of Germany (11.2005)

42/11-39 EN Rev. 04

ABB Ltd.
Salterbeck Trading Estate
Workington, Cumbria, CA14 5DS
UK
Tel: +44(0)1946-830-611
Fax: +44(0)1946-832-661

ABB Inc.
125 E. County Line Road
Warminster, PA 18974
USA
Tel: +1 215-674-6000
Fax: +1 215-674-7183

ABB Automation Products GmbH
Borsigstr. 2
63755 Alzenau
Germany
Tel: +49 551 905-534
Fax: +49 551 905-555
CCC-support.deapr@de.abb.com