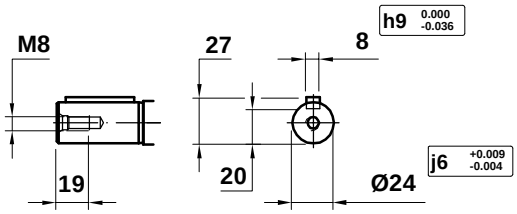

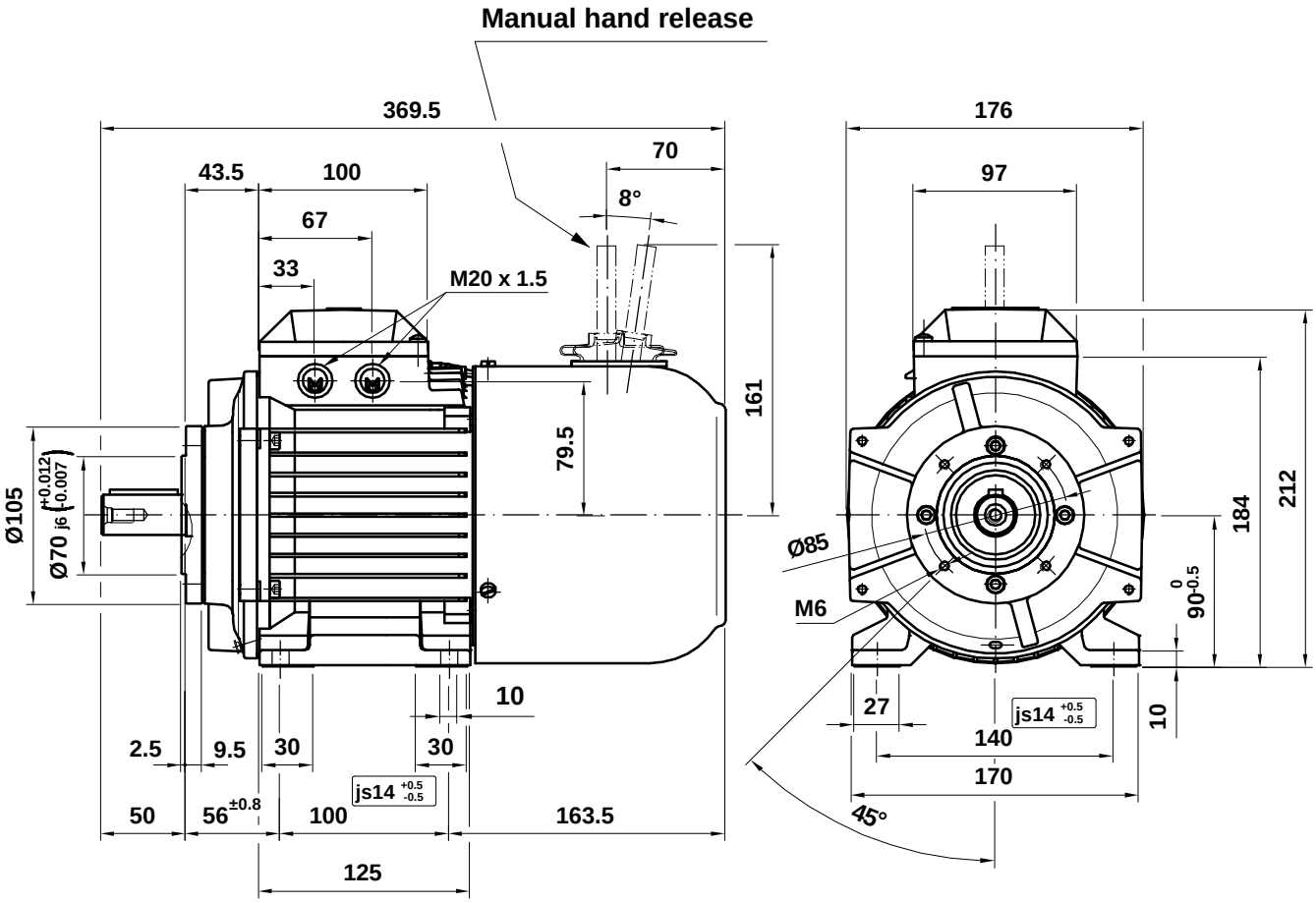

M3ARF/S 090 S

Motor Dimension Print	Motor Type : M3ARF/S 090 S IMB34 FT-85	Document Nº : A1.3241
Description : Brake motor foot and flange mounted special (2-pieces) IM2101		
Unit : División Motores, Spain Date : 2002-01-07	Issued by : IKA/G.Blanes Approved by : IKA/E.Sáenz	Replaces : Replaced by :
ABB Automation Products, S.A.	Customer Reference :	ABB