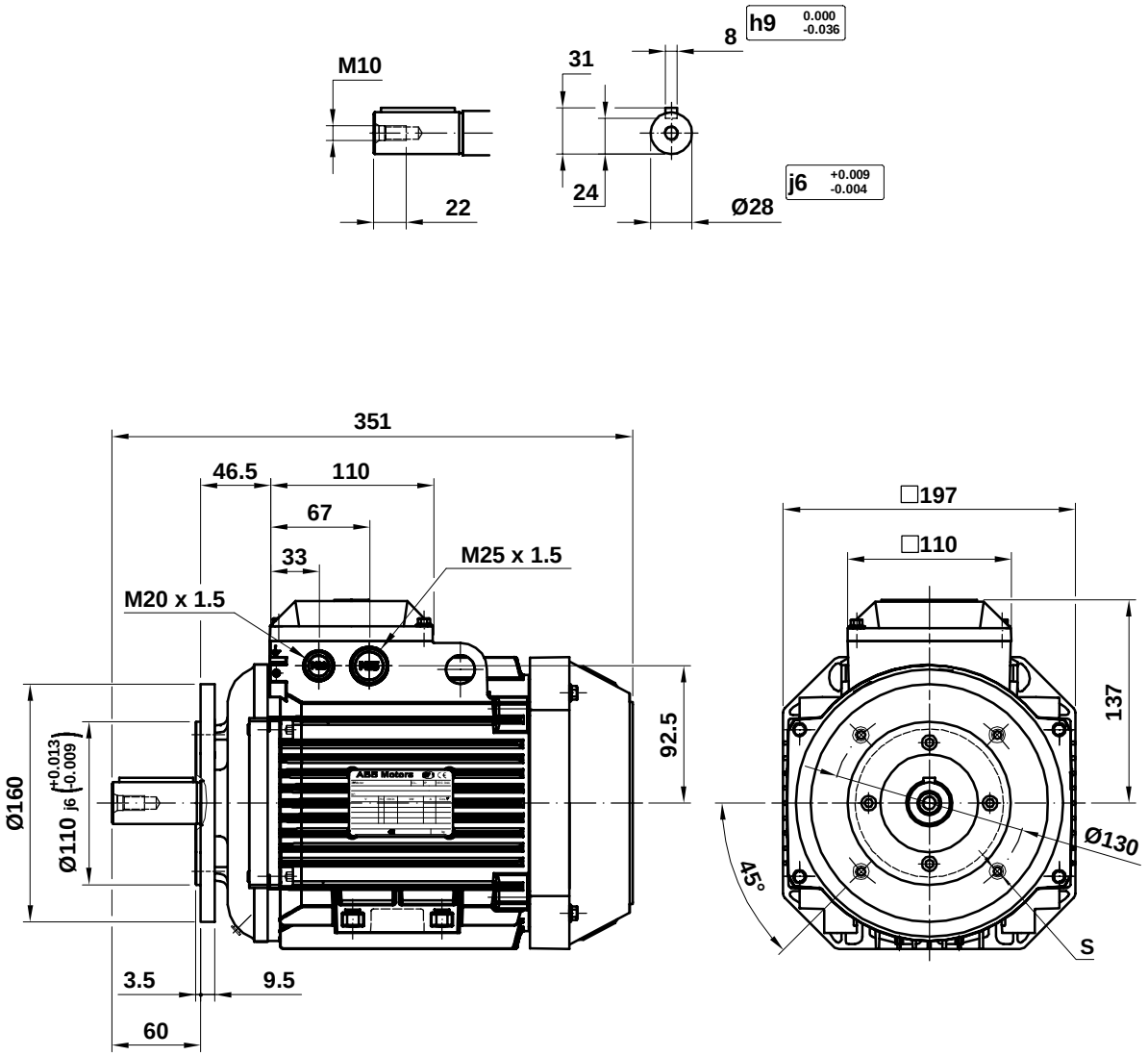

S = { Ø11 – Special IM 3001 / M8 – Special IM 3601 }

M2AA 100

(*) Except 100 LD

Additional information:

VC226: Flange ring FF 130 / Aro brida FF 130 // VC227: Flange ring FT 130 / Aro brida FT 130

Motor Dimension Print	Motor Type : M2AA 100 (*)	Document Nº : A1.5418 / 3D A2.4305

Description : Motor flange mounted special (2-pieces) IM3001 or IM3601
Motor con brida (2 piezas) IM3001 o IM3601

Unit : Discret Automation & Motion - Fábrica Motores	Issued by : ERM/ L. Moreno	Replaces : To date 2012-02-10
Date : 2012-12-05	Approved by : ERM/ G. Blanes	Replaced by :

Asea Brown Boveri, S.A. | Customer Reference : | ABB