This document is issued by means of a computerized system.
The digitally stored original is electronically approved. The approved document has a date entered in the 'Approved'-field.
A manual signature is not required.

a) For mounting on active part use A+106, B+106 and C+106 (See also Drawing 54920103-1)
b) Short version means reduced switching capacity. Please refer to Technical Guide
c) Not applicable for 380 kV

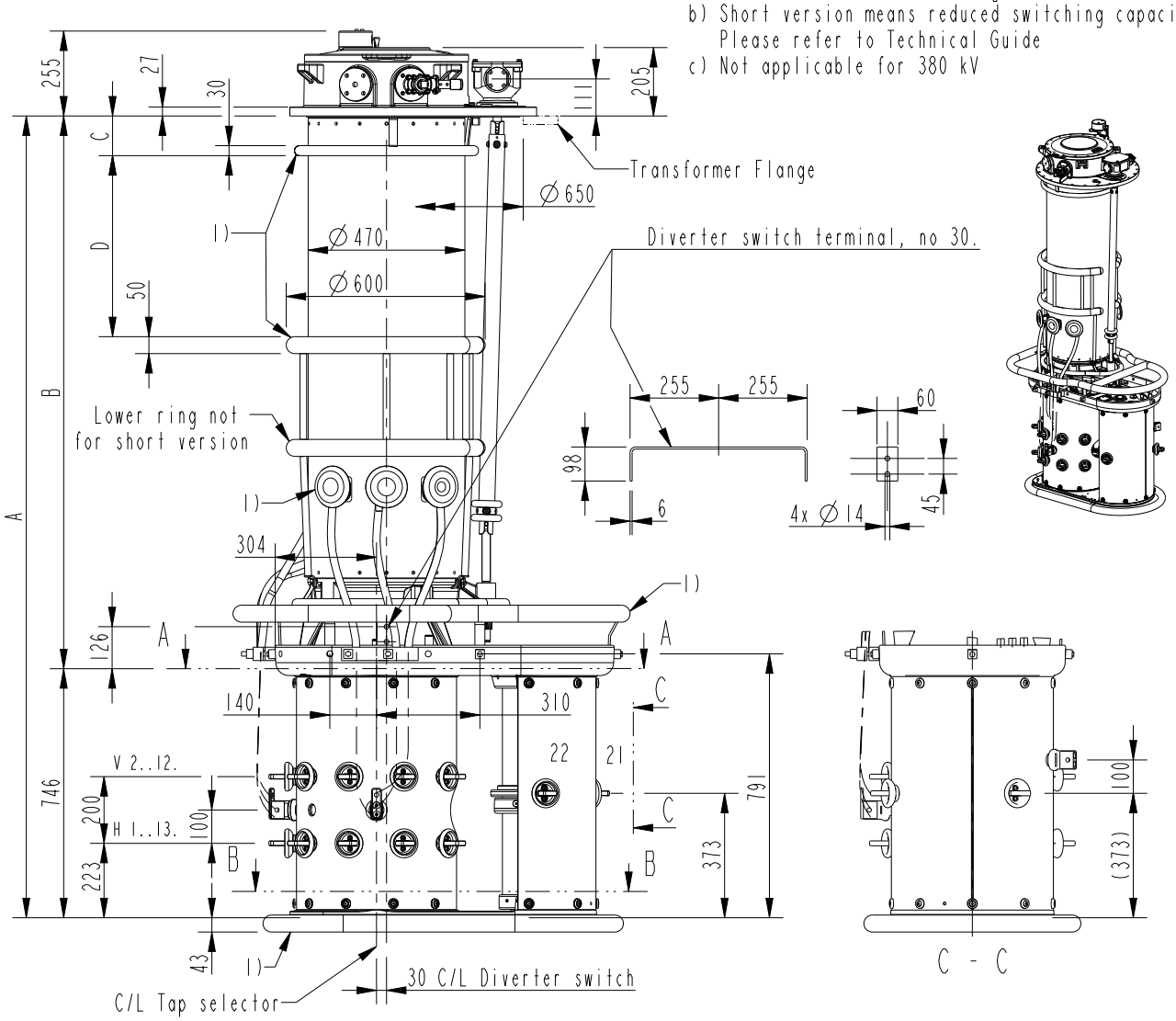




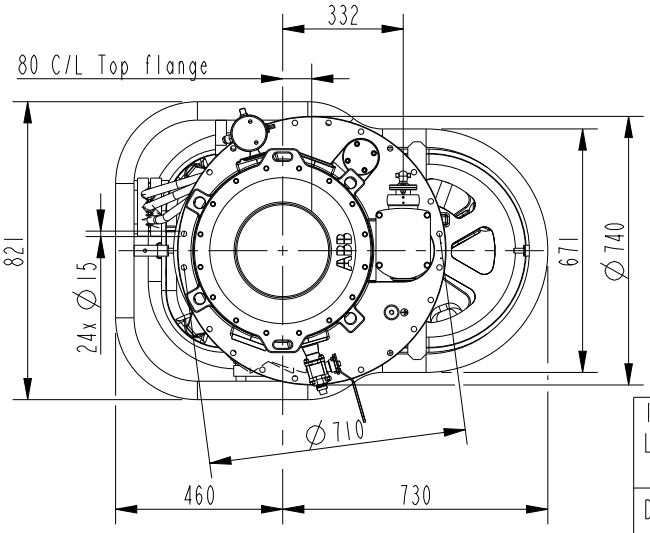


1) Shielding rings for insulating levels 650, 750 and 1050 kV only.

| INSULATION LEVEL kV | | 380 650 750 | 1050 | SHORT VERSION b) 380,650 750 | 1050 |
|---|---|---|---|---|---|
| Dimensions in mm | A | 2801 a) | 3101 a) | 2581 a) | 2881 a) |
| | B | 1354 a) | 1654 a) | 1134 a) | 1434 a) |
| | C | 119 a)c) | 119 a) | 119 a)c) | 119 a) |
| | D | 240 c) | 540 | 240 c) | 540 |

| Date / Approved | Responsible department | Document Kind |
|---|---|---|
| - | PPCO/TU | DIMENSION DRAWING |

Title
TAP-CHANGER
VUCGR, VUCGD E,T,B(1ph) XXXX/450,800/F 9,13 Pos

| Document Id. | Revision | Language | Sheet |
|---|---|---|---|
| 1ZSC004528-AAV | B | EN | 1/2 |

We reserve all rights in this document and in the information contained therein. Reproduction, use or disclosure to third parties without express authority is strictly forbidden. © Copyright 2015 ABB. All rights reserved.

This document is issued by means of a computerized system.
The digitally stored original is electronically approved. The approved document has a date entered in the 'Approved'-field.
A manual signature is not required.

## 9 POSITIONS

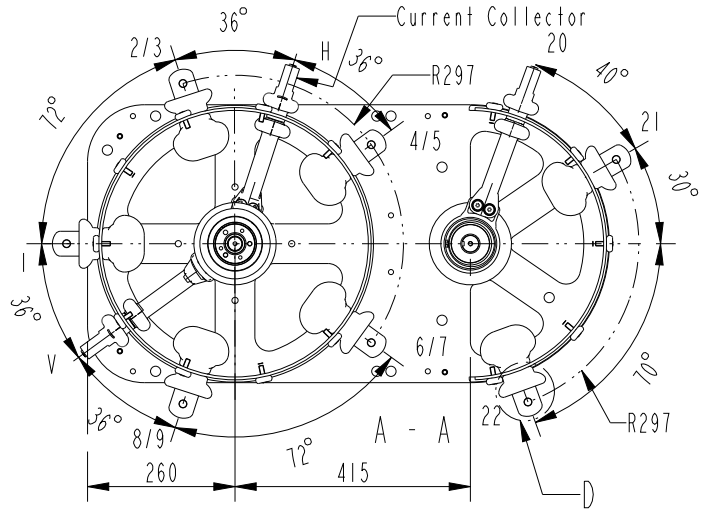


## 13 POSITIONS

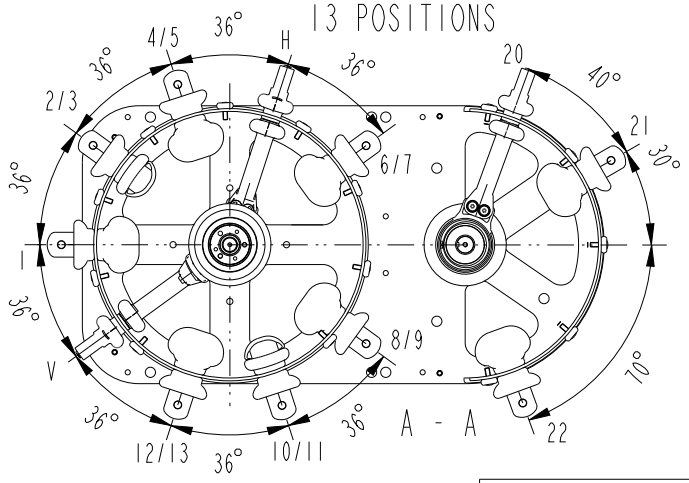


| ADDITIONAL DRAWINGS: |
|---|
| Connection Diagrams:See Technical Guide UC |
| Mounting on active part: 54920103-1 |
| Accessories:54920103-2 |
| Motor Drive BUL:54830001-1 |
| Motor Drive BUE:54830001-2 or -3 |
| External Drive Shaft:54920083-4 |
| Pressure Relay:54920083-2 |
| Bevel Gear:54920083-1 |

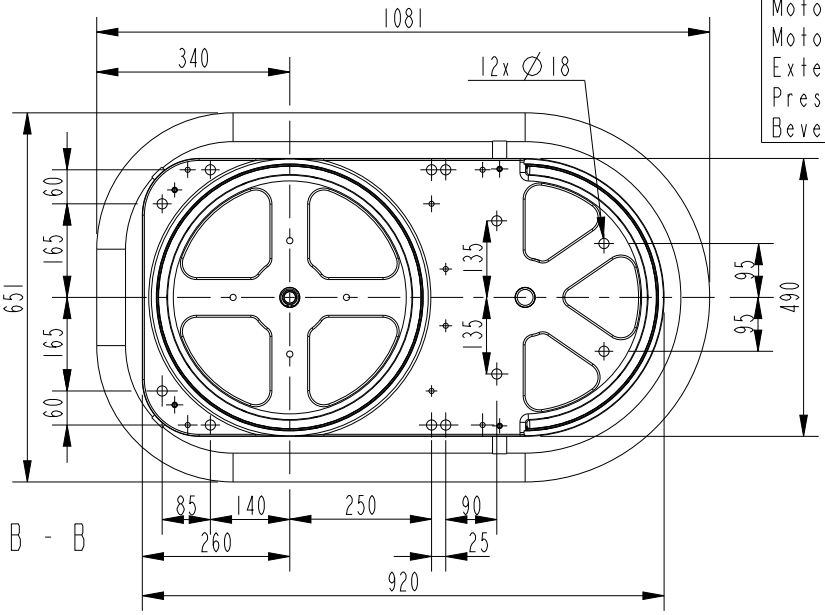


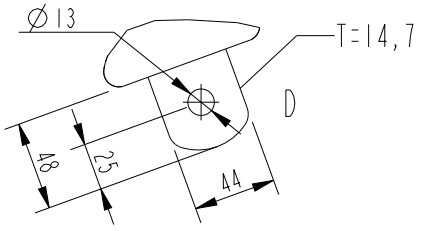


| Date / Approved | Responsible department | Document Kind | |
|---|---|---|---|
| - | PPCO/TU | DIMENSION DRAWING | |

ABB

Title
TAP-CHANGER
VUCGR, VUCGD E,T,B(1ph) XXXX/450,800/F 9,13 Pos

| Document Id. | Revision | Language | Sheet |
|---|---|---|---|
| 1ZSC004528-AAV | B | EN | 2/2 |

We reserve all rights in this document and in the information contained therein. Reproduction, use or disclosure to third parties without express authority is strictly forbidden. © Copyright 2015 ABB. All rights reserved.