Repair of GOH 150 and 200

General

GOH 150 and 200 have two different designs on the sealing system at the bottom end: the original system and the modified system.

The difference between the systems is the flexible membrane in the modified system.

Spare parts

The spare-kits are of two types: for bushings with the original system and for bushings already provided with the modified sealing system.

It is possible to see if the bushing has the modified system by looking at the outside of the rings at the bottom end.

If the piles of springwashers are totally visible it is the original system.

If the piles only are visible in a slot of 5 mm between the bottom-plates, it is the modified system.

Please see next page.

Repair

Repair of bushing(s) shall be carried out by ABB Components or authorized personnel.

Original system

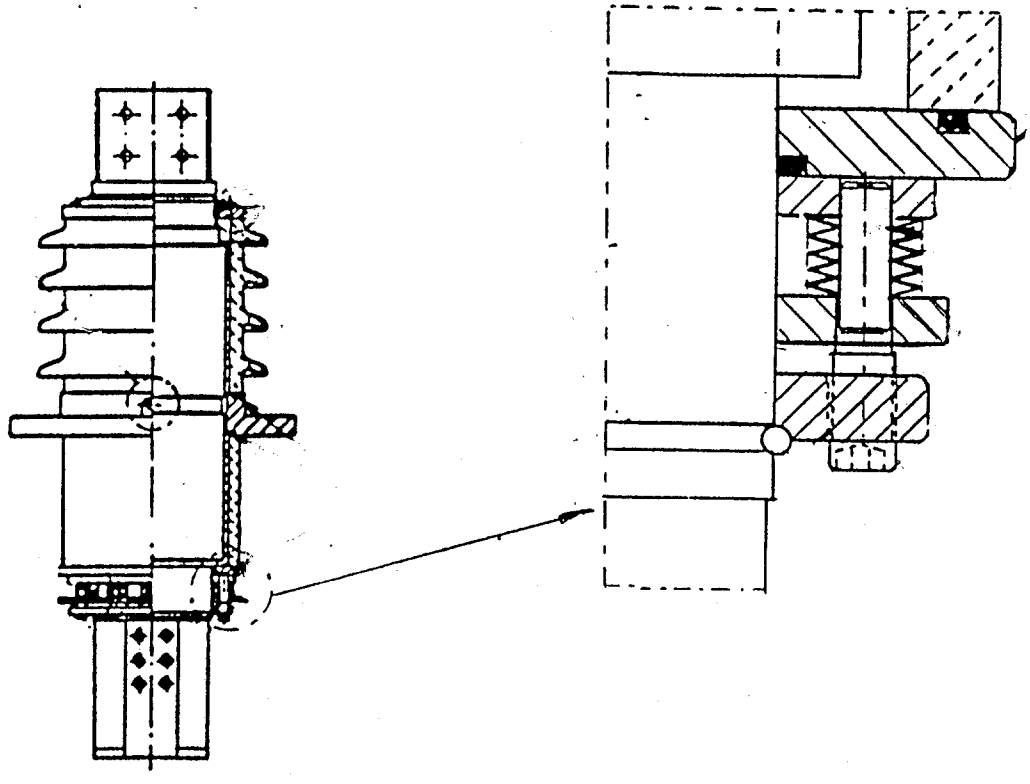
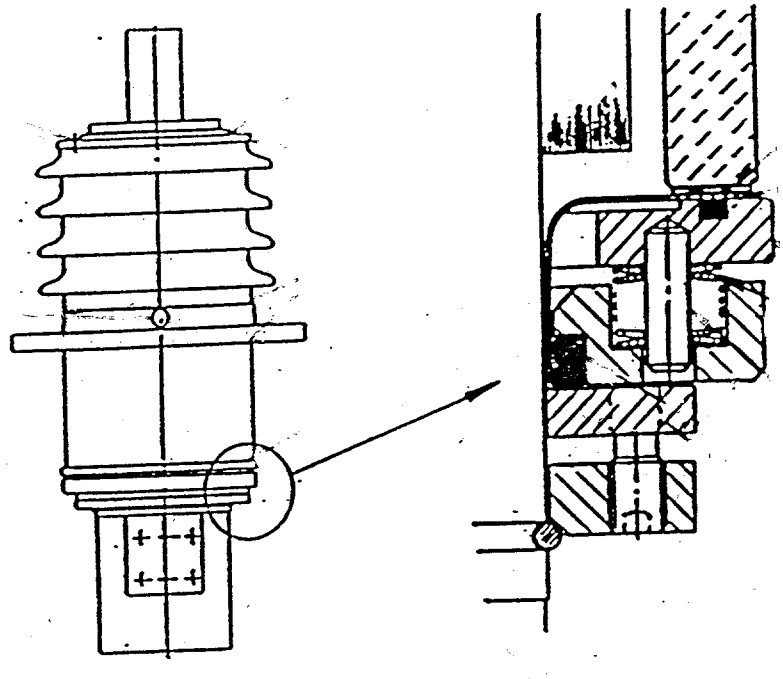
Modified bushing