ABB Network Partner AB

RAGEK 100 % and 95 % stator earth-fault protection for generators.

User´s Guide

1MRK 504 006-UEN

Replaces
Version 1
August 1997

General

- Complete stator earth-fault protection for unearthed or high impedance earthed generators
- Cost-effective and simple to apply; does not require additional high voltage equipment
- Designed in COMBIFLEX® modular system and equipped with COMBITEST® test switch
- RAGEK 95%
  - earth-fault protection covering 95% of the stator winding
  - two stage measuring of filtered fundamental frequency neutral point voltage
  - each stage has delayed output with three make contacts and red indicating flag
  - dimension: 4U 24C
- RAGEK 100%
  - earth-fault protection covering 100% of the stator winding
  - measures filtered fundamental frequency neutral point voltage to protect 95% of the stator winding
  - measures filtered third harmonic neutral point voltage to protect 95-100% of the stator winding
  - as little as 1% generator third harmonic voltage enables full protection
  - delayed outputs with three make contacts and red indicating flag
  - the 95-100% function is supervised by generator voltage or current
  - dimension: 4U 42C

List of contents

1 Application

Common practice in most countries is to earth the generator neutral through a resistor. The current through the neutral point resistor will normally be 5 - 10 A when subjected to the rated phase to earth voltage. For generators with step-up transformer, a neutral point voltage relay with typical setting 5 % of generator phase voltage will provide earth-fault protection for 95 % of the stator winding. It also covers the generator bus, the low-voltage winding of the step-up transformer and other ancillaries galvanically interconnected with the stator winding.

An earth-fault close to the neutral point of the generator will not give sufficient neutral point voltage to activate the neutral point voltage (95 %) relay. Generators which produce about 1 % or more third harmonic voltage under all service conditions, can have the entire stator winding, including the neutral point, protected using a scheme which combines the neutral point voltage function (95 % relay) and a third harmonic undervoltage function. Under normal service, typically 40 - 60 % of the generated third harmonic phase voltage will appear across the neutral point resistor and will activate the third harmonic voltage relay. If an earth-fault occurs close to the neutral point, the third harmonic voltage drops to a low value and the undervoltage relay operates. The relay must have a filter which prevents the fundamental frequency neutral point voltage from affecting the third harmonic voltage function.

The 100 % stator earth-fault protection can also be used for generators with unearthed neutral. The third harmonic voltage between the neutral point and earth will increase compared to generators with earthing resistor and the third harmonic undervoltage (100 %) function can cover a larger part of the stator winding. However, in case of an earth-fault in the high voltage (HV) network, the zero-sequence voltage transferred to the stator circuit via the capacitance between the HV and LV windings of the step-up transformer increases compared to generators with neutral point resistor. The voltage setting or the time delay of the generator neutral point voltage (95 %) relay must then be increased to get selectivity against earth-fault relays on the HV side.

The 100 % stator earth-fault protection can even be used for generators with neutral point tuned reactor. The third harmonic voltage between the neutral point and earth will increase, compared to generators with earthing resistor. The zero-sequence voltage transferred to the stator circuit in case of an earth-fault in the HV network will generally be so high that selectivity of the 95 % relay can not be obtained by a reasonable increase of the voltage setting.

A generator bus voltage supervision relay is included to prevent unwanted operation of the third harmonic (100 %) relay when the generator is out of service and during running up/down. Alternatively, a stator current supervision relay is used to block the third harmonic voltage relay until the generator is in service.

The generator should be the only third harmonic voltage source galvanically interconnected with the stator circuits. An exception is contra-rotating (twin) generators which always have the same loading and hence produce the same amount of third harmonic voltage.

2 Measurement principles

In case of an earth-fault on the stator winding and no additional fault resistance, the fundamental frequency neutral point voltage is increasing in proportion to the distance of the fault from the neutral point. Hence a voltage relay set to 5 % of the stator phase voltage will protect 95 % of the stator winding.

The third harmonic voltage induced in the stator windings has basically the same phase angle and same magnitude in all three phases. A closed loop for third harmonic currents is made up by the phase-to-earth capacitance and the earthing impedance in the generator neutral. A good representation of the distributed stator winding capacitance to earth is obtained by placing one half of the total winding capacitance on the neutral point side and one half on the terminal side, see Figure 1. The capacitance C_L comprises the phase-to-earth capacitance on the terminal side, including generator bus, the low voltage winding of the step-up transformer and surge voltage capacitors that may be installed.

$\mathbf{C_w}$ = total stator winding capacitance to earth per phase

$\mathbf{C_L}$ = total capacitance to earth per phase on the terminal side

$\mathbf{Z_e}$ = neutral point earthing impedance, normally a resistance.

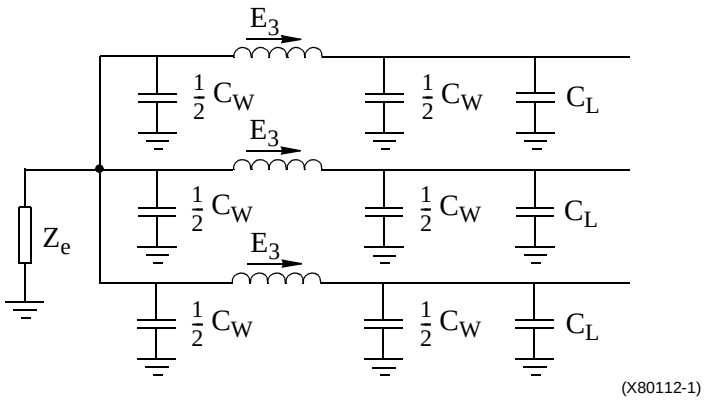

Fig. 1 Practical representation of capacitances to earth

The circuits can be further simplified to a single-phase system to facilitate the calculation of the third harmonic voltage distribution, see Figure 2.

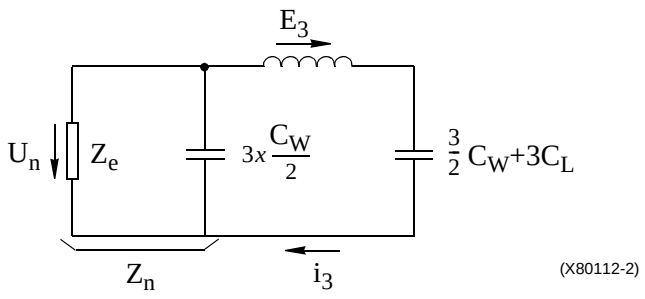

Fig. 2 Simplified third harmonic voltage circuit

A stator winding earth-fault with no additional fault resistance will result in a third harmonic voltage between the neutral point and earth which is proportional to the percentage of the stator winding situated between the fault location and the neutral. Hence, a fault 5 % off the neutral will reduce the 3rd harmonic voltage between the neutral and earth from typically 40 - 60 % to 5 % of the induced 3rd harmonic voltage per phase. At the same time, a fundamental frequency voltage equal to 5 % of rated generator phase voltage will be fed to the third harmonic under-voltage relay. Therefore, an effective filter must make the third harmonic relay practically insensitive to fundamental frequency voltages.

2.1 Example 1: Generator with neutral point resistor

C_W = 0,3 µF / phase
C_L = 0,2 µF / phase
E_{3min} = 1% of rated generator phase voltage (Uph)
E_{3max} = 4 % of Uph
R_e = 1 500 Ω f = 50 Hz
Voltage ratio of VT between generator neutral point and earth: Uph/100 V
Capacitance on the neutral side: 3/2 C_W = 0,45 µF
Reactance on the neutral side:

$$X_n = \frac{10^6}{j \cdot 2\pi \cdot 150 \cdot 0{,}45} = -j2358\Omega$$

Impedance on the neutral side:

$$Z_n = \frac{1500(-j \cdot 2358)}{1500 - j2358} = 1068 - j679 = 1266 \angle 32^\circ \Omega$$

Capacitance on the terminal side:

$$\frac{3}{2} \cdot C_W + 3 \cdot C_L = 0{,}45\mu F + 0{,}6\mu F = 1{,}05\mu F$$

Reactance on the terminal side:

$$X_L = \frac{10^6}{j \cdot 2\pi \cdot 150 \cdot 1{,}05} = -j1010\,\Omega$$

Total loop impedance, Zloop:

$$-j1010 + (1068 - j679) = 1068 - j1689\Omega = 1998\angle 58°\,\Omega$$

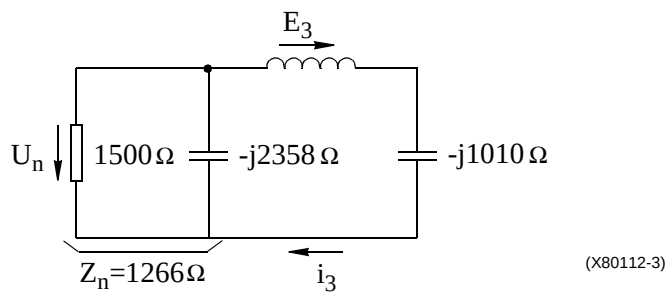

Fig. 3 Simplified third harmonic circuit, example 1

Hence voltage across the neutral point resistor:

$$U_{3n} = E_3 \cdot \frac{|Z_n|}{|Z_{loop}|} = E_3 \cdot \frac{1266}{1998} = 0{,}63 \cdot E_3$$

that is, under normal service conditions, 63 % of the induced third harmonic voltage per phase will appear across the neutral point resistor. Hence, when the generator is producing minimum third harmonic voltage, E_3= 1% of Uph, the third harmonic voltage U_{3n} will be 0,63 % of Uph. On the relay side of the voltage transformer, the minimum third harmonic voltage will be:

$$100V \cdot \frac{0{,}63}{100} = 0{,}63V$$

A typical relay setting would be 75 % of the minimum voltage = 0,47 V.

With the standard setting 5 % of generator phase voltage for the neutral point voltage (95 %) relay, the third harmonic undervoltage relay should operate for faults up to say 1,5 x 5 = 7,5 % off the neutral to get overlapping of the 100 % and 95 % functions. When the generator is producing maximum third harmonic voltage, U_3 = 4%, an earth-fault 7,5 % off the neutral point will give a third harmonic voltage of:

$$U_{3n} = 4\% \cdot \frac{7,5}{100} = 0{,}3\% \text{ of Uph}$$

across the neutral point resistor. On the relay side of the VT, the third harmonic voltage will be:

$$100V \cdot \frac{0,3}{100} = 0{,}30\ V$$

An earth fault 7,5 % off the neutral also gives a 50 Hz voltage equal to:

$$100\ V \cdot \frac{7{,}5}{100} = 7{,}5\ V$$ on the relay side.

From Fig. 5 it is seen, that with third harmonic relay operate value 0,40 V (U2=0,2V), the relay would operate when the combination of 0,30 V third harmonic and 7,5 V fundamental frequency voltage is fed to the relay. Hence, with the higher setting of 0,47 V, there is an overlapping from 5 % up to more than 7,5 % off the neutral.

2.2 Example 2: Generator without neutral point resistor

The same capacitance as in Example 1, but the generator has no earthing resistor. The simplified circuit is shown in Figure 4.

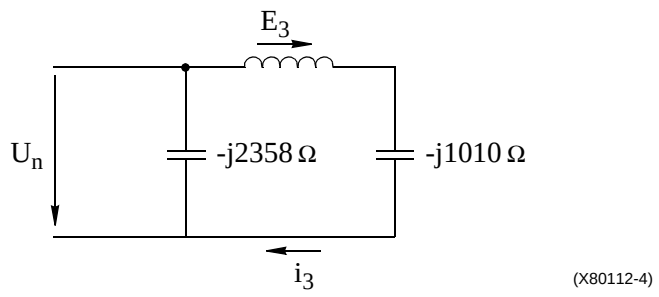

Fig. 4 Simplified third harmonic circuit, example 2

Hence third harmonic voltage between the neutral point and earth:

$$U_{3n} = E_3 \cdot \frac{2358}{2358 + 1010} = 0{,}7 \cdot E_3$$

It is obvious that the third harmonic voltage between the neutral point and earth under normal service conditions increases with increasing neutral point impedance.

3 Design

3.1 RAEGK 95 % stator earth-fault protection

The RAEGK 95 % stator earth-fault protection according to enclosed circuit diagram 1MRK 001 054-AB comprises a test device RTXP 18, a DC/DC converter RXTUG 22, a voltage relay RXEDK 2H with filter for measuring of the fundamental frequency voltage (50 or 60 Hz) and a signal relay RXSF 1. The modules of the 95 % protection are also a part of the 100 % protection which is described below.

3.2 RAEGK 100 % stator earth-fault protection with voltage supervision

The RAEGK 100 % stator earth-fault protection acc. to enclosed circuit diagram 1MRK 054-BB comprises a test device RTXP 18, a DC/DC-converter RXTUG 22H, three voltage measuring relays RXEDK 2H, a voltage limiting unit RXTDA 1, one auxiliary relay RXMB 1 and one signal relay RXSF 1.

Pos 101: RTXP 18, test switch according to Catalogue 1MRK 512 001-BEN.

When the test-plug handle RTXP 18 is inserted into the test switch, preparations for testing are automatically carried out in the proper sequence, i.e. blocking of tripping circuits, opening of voltage circuits and making terminals available for secondary injection testing.

Pos 107: RXTUG 22H, DC/DC-converter acc. to Catalogue 1MRK 513 001-BEN.

Input voltage 24 - 250 V, output voltage ±24 V. The converter can be loaded with up to 15 W.

Pos 113: RXEDK 2H, micro-processor based voltage relay acc. to Catalogue 1MRK 509 004-BEN for the voltage supervision function. The relay is equipped with filter 50-60 Hz sharp for measuring of the fundamental frequency voltage (50 or 60 Hz) and is connected to measure voltage between phases. On delivery, the relay is connected for rated voltage U_r = 200 V, which gives scale range 20 - 320 V for stage U1 and 10 - 480 V for U2. The relay is set for over-voltage function.

When the time delayed stage U2 of the voltage supervision relay operates, the third harmonic under-voltage relay is released for function. The delay is settable 0,03 - 10 s.

The time delayed voltage stage U1 can be used for generator overvoltage function. The definite time delay is settable 0,05 - 16 s.

For remaining technical data, see the catalogue.

Pos 119: RXEDK 2H, micro-processor based voltage relay (set for measuring overvoltage) for the fundamental frequency neutral point voltage (95%) function. The relay is equipped with filter 50-60 Hz sharp for measuring of the fundamental frequency voltage (50 or 60 Hz). On deliv-

ery, the relay is connected for rated voltage U_r = 50 V, which gives scale range 5 - 80 V for stage U1. The definite time delay of the trip output from stage U1 is settable 0,05 - 16 s.

Pos 125: RXEDK 2H, micro-processor based voltage relay for the third harmonic undervoltage function. The relay is supplied with filter 150-180 Hz sharp for measuring of the third harmonic voltage (150 or 180 Hz). On delivery, the relay is connected for rated voltage U_r = 2 V, which gives scale range 0,1 -4,8 V for stage U2. Note that the voltage limiting unit RXTDA 1 increases the operate value to twice the value set on RXEDK 2H. The time delay of stage U2 is settable 0,03 - 10 s.

Pos 137: RXSF 1, signal relay with indicating flag according to Catalogue 1MRK 508 015-BEN. The unit contains two smaller relays, each with three make contacts and a red indicating flag. The flag is reset manually with an external knob.

Pos 131: RXMB 1, auxiliary relay acc. to Catalogue 1MRK 508 006-BEN. Break contacts with short operate time disconnect the measuring circuit and open the output circuit of the third harmonic voltage relay when the instantaneous stage of the 95% relay operates. A make contact indicates start of the 95 % relay.

Pos 331: RXTDA 1, voltage limiting unit with series capacitor and voltage regulator diodes.The unit increases the voltage withstand capability of the third harmonic relay with U_r = 2 V to 20 V continuously and 120 V for 10 s.

3.3 RAEGK 100 % stator earth-fault protection with current supervision

The RAEGK 100 % protection with current supervision function acc. to circuit diagram 1MRK 001 054-CB includes a micro-processor based current relay type RXIDK 2H on pos. 113 instead of the voltage supervision relay. The current relay is connected to a stator phase current measuring CT. Stage I1 is used for current supervision and I2 can be used for generator overcurrent function. Stage I2 is definite time delayed up to 1s. For technical data, see catalogue 1MRK 509 002-BEN.

The remaining units are the same as those used in RAEGK with voltage supervision function.

4 Setting

Setting of the operating voltages and time delays for relay RXEDK 2H are made as shown in Connection and Setting Guide 1MRK 509 022-WEN. Observe that the operating voltage for the 3rd harmonic 100% relay is about twice the setting for U2 due to the voltage drop in the voltage limiting unit RXTDA 1.

For RAGEK with current supervision, the operate value of relay RXIDK 2H, is for stage 1: 0,75 - 3,25 A and 0,375 - 16,25 A and for stage 2: 0,1 - 40 A and 0,5 - 200 A for protection with rated current 1A and 5A respectively.

4.1 95 % relay

The operating value of the 95 % voltage relay must be set higher than maximum neutral point voltage on the generator side in case of an earth-fault on the HV side. When the necessary data are known, the voltage can be calculated as shown in Appendix A.

Alternatively, the time delay of the 95 % relay is increased to give selectivity for earth-faults on the HV side. For block connected generators with neutral point resistor, the setting 5 % of generator phase voltage and time delay 0,3 - 0,5 s is normally applicable.

4.2 100 % relay

The third harmonic voltage will normally vary substantially with the loading of the generator. In general, it is recommended to measure the 3rd harmonic voltage to the relay under different loading conditions. The minimum value will often be obtained when the generator is running underexcited with a low active load.

Recommended settings are 70 -75 % of minimum third harmonic voltage and time delay 5 - 10 s.

If the minimum third harmonic voltage of the generator under service conditions and the capacitance of the stator circuit are known, the setting of the 3rd harmonic relay can be calculated as shown under chapter 2.

4.3 Voltage supervision relay

The operating value of stage U2 is normally set to 90 % of rated generator voltage. The time delay of stage U2 is set to override possible time difference between the activation of stage U2 and the third harmonic relay during generator running-up. A normal setting is 4 - 5 s.

4.4 Current supervision relay

A normal setting of stage 1 of the RXIDK 2H current supervision relay is 20% of rated generator current. The time delay is normally set on 4 - 5 s.

5 Technical data

Operate values, rated frequency 50-60 Hz

Relay	**Setting range**	**Overload capacity** 50-60Hz		**Power consumption** 50-60Hz (at voltage= lowest setting)
		continuously	10 s (1 s)	
Fundamental RXEDK 2H	U1 = 5 - 80 V U2 = 2,5 -120V	175 V	200 V	0,5 mVA
3rd harmonic RXEDK 2H	U2 = 0,1 - 4,8 V *)	20 V	120 V	0,2 mVA
Voltage supervision RXEDK 2H	U1 = 20 - 320 V U2 = 10 - 480 V	500V	500V	0,5mVA
Current supervision RXIDK 2H Ir =1A Ir = 5A	 I1 = 0,075-3,25A I1 = 0,375-16,25A	 6A 20A	 (100A) (350A)	 0,3mVA 0,5mVA
*) The operate voltage is two times set value, due to voltage drop in the voltage limiting unit RXTDA 1. Fig. 5 and 6 show the influence of the fundamental frequency voltage to the operate values.				
Time delay of RXEDK 2H and RXIDK 2H				
U1 U2 I1		0,05 - 16,1 s definite time 0,03 - 10 s definite time 0,05 - 16,1 s definite time		
Filter characteristic				
Fundamental RXEDK 2H 3rd harmonic RXEDK 2H		Rejects 3rd harmonic by 1: 40 or more Rejects fundamental frequency by 1: 50 or more		
Auxiliary voltage				
Auxiliary voltage EL for RXTUG 22H Auxiliary voltage for the relays Auxiliary voltage UL		24 - 250 V dc ± 20 % ± 24 V (from RXTUG 22H) 24, 48 - 55, 110 - 125 or 220 - 250 V dc		
Power consumption				
EL UL		< 12 W < 3 W		
Dimensions				
RAGEK 95 % protection RAGEK 100 % protection		4U 24C 4U 42C		
Contact data				
tripping others		See RXSF 1 See RXEDK 2H and RXMB 1		

Operate values, third harmonic relay

The influence of the fundamental frequency voltage varies with the phase angle between the fundamental and the third harmonic voltages. Fig. 5 and Fig. 6 show the worst case, that is, when the fundamental frequency voltage has maximum influence on the relay undervoltage operate value.

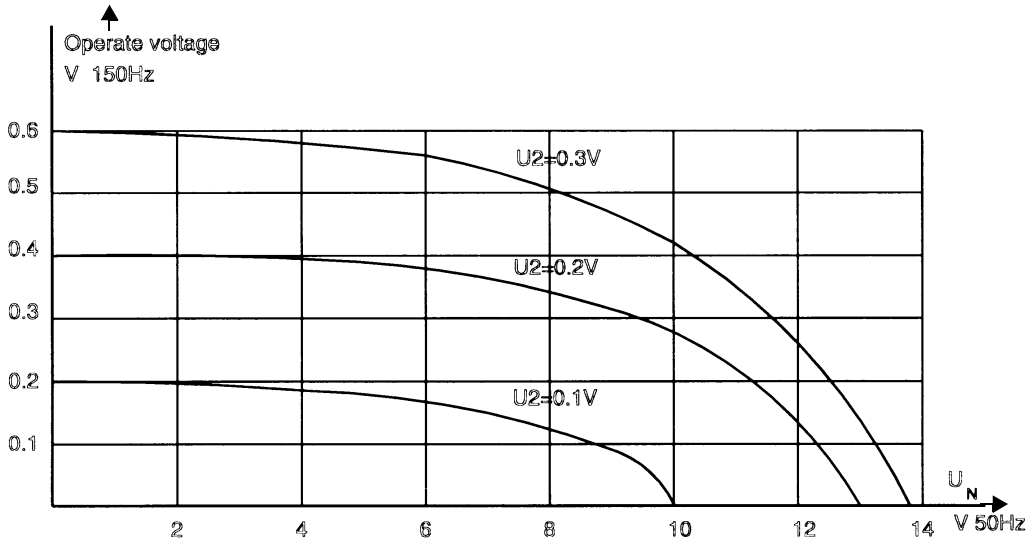

Fig. 5 Operate values for third harmonic relay when subjected to mixture of third harmonic and fundamental frequency voltages. f = 50 Hz

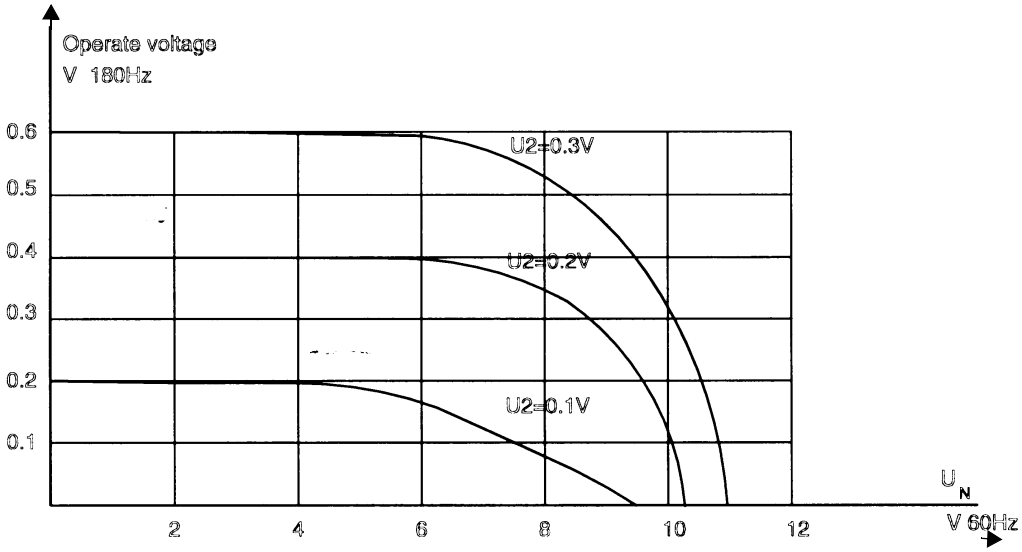

Fig. 6 Operate values for third harmonic relay when subjected to mixture of third harmonic and fundamental frequency voltages. f = 60 Hz

Detailed technical data for the components of RAEGK are given in the catalogues:

Component	Catalogue
RXEDK 2H	1MRK 509 004-BEN
RXIDK 2H	1MRK 509 002-BEN
RXMB 1	1MRK 508 006-BEN
RXSF 1	1MRK 508 015-BEN
RTXP 18	1MRK 512 001-BEN
RXTUG 22H	1MRK 513 001-BEN

6 Receiving, Handling and Storage

6.1 Receiving and Handling

Remove the protection package from the transport case and make a visual inspection for transport damages. Check that all screws are firmly tightened and all relay elements are securely fastened.

Check that all units are included in accordance with the apparatus list.

Normal ESD (Electrostatic Discharge) precautions for microprocessor relays should be observed when handling the packages and separate relay units.

6.2 Storage

If the protection package is to be stored before installation, this must be done in a dry and dust-free place, preferably in the original transport case.

7 Installation, Testing and Commissioning

7.1 Installation

The RAGEK relay can be mounted on the support frame in a 19” equipment frame or in a RHGX -type relay case.

The height and width of the relays are indicated in the enclosed circuit diagrams with height (U) and width (C) modules, where U= 44.45 mm and C= 7mm. The depth of the relays, including the connection wires, is approximately 200 mm. Detailed information about the Combiflex connection and installation components are given in the catalogue 1MRK 513 003-BEN.

The external connections (which are indicated with dotted lines on the terminal and circuit diagrams) are done with leads, equipped with 20A Combiflex sockets, to the RTXP 18 test switch and with 10A sockets to the relay terminal bases.

Information about the identification system for relays and relay terminals is given in the catalogue 1MRK 514 005-BEN.

7.2 Testing

Insert the RTXP 18 testplug-handle into the test switch, pos 101. When RTXP 18 is fully inserted, the banana-plug sockets on the test handle are connected to the relay circuits, for example, terminals 9 and 10 on the test handle are connected to terminals 9B-10B for injection of test voltage to relay RXEDK 2H, pos 113 in circuit diagram 1MRK 001 054-AB.

Secondary injection testing with fundamental frequency and third harmonic voltages should be made to verify the set operating voltages and time delays. Correct output of all alarm and trip functions should be verified.

7.3 Commissioning

Secondary testing according to above is a part of the commissioning work. The function of the protection should be checked when the generator is run up and also when taken out of service. If possible, the third harmonic voltage to the relay should be measured at different generator loads.

The commissioning work also includes checking of external circuits connected to the protection and checking that correct secondary voltages (and current when current supervision is used) are obtained at the relay terminals.

8 Maintenance

Under normal conditions, RAGEK requires no special maintenance. The covers of the relay modules should always be installed in place. Maintenance testing should be made at regular intervals, say every four years. The testing is suitably carried out with injection apparatus that can generate both fundamental frequency and third harmonic frequency voltages.

9 Terminal and Circuit diagrams

The table below shows ordering numbers and drawings for the different variants of the stator earth fault protection type RAGEK.

Type	Ordering No. 1MRK 001	Circuit Diagram 1MRK 001	Terminal diagram 1MRK 001	Diagram
RAGEK 95 %	053-AB	054-AB	054-ABA	Fig. 7, 8
RAGEK 100 % with voltage supervision	053-BB	054-BB	054-BBA	Fig. 9, 10
RAGEK 100 % with current supervision	053-CB	054-CB	054-CBA	Fig. 11, 12

9.1 RAGEK 95% stator E/F protection

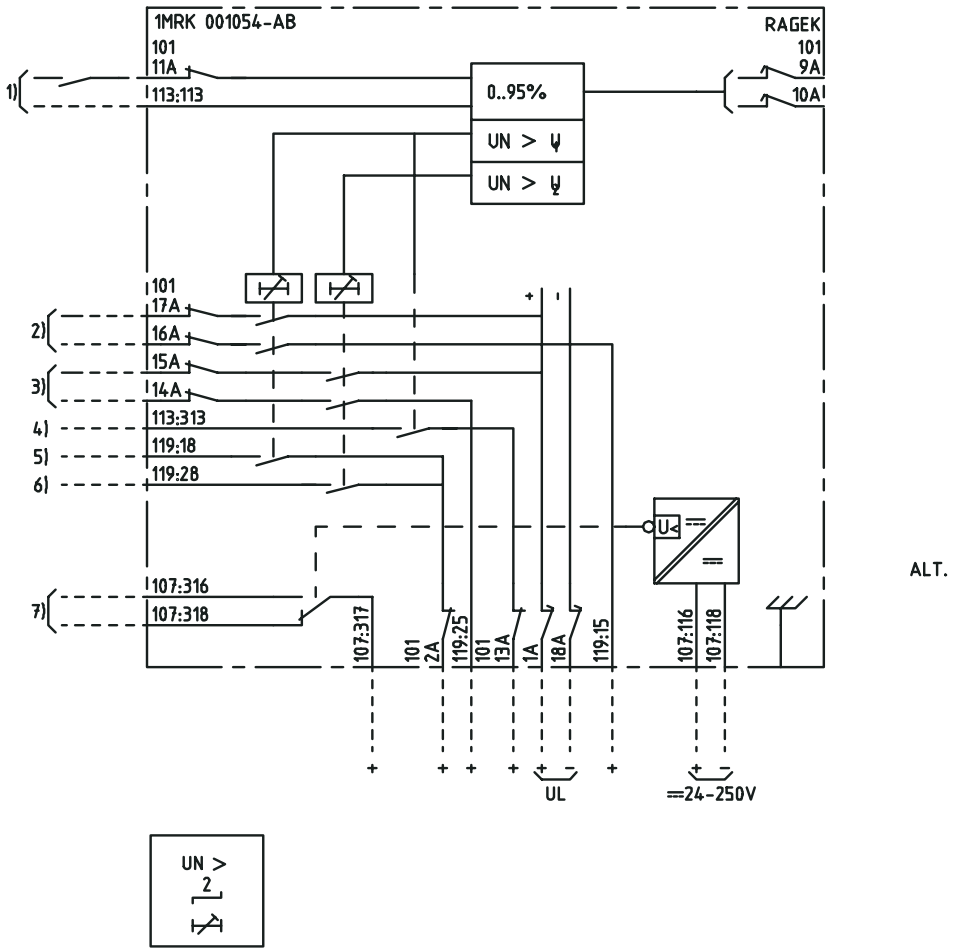

95% STATOR E/F PROTECTION 2-STAGE
95% STATORJORDFELSSKYDD 2-STEG

1) RESETTING OF INDICATION
ÅTERSTÄLLNING AV INDIKERING

2) TRIPPING STAGE 1
UTLÖSNING STEG 1

3) TRIPPING STAGE 2
UTLÖSNING STEG 2

4) START INDICATION
START INDIKERING

5) ALARM STAGE 1
SIGNAL STEG 1

6) ALARM STAGE 2
SIGNAL STEG 2

7) LOSS OF AUXILIARY VOLTAGE
BORTFALL AV HJÄLPSPÄNNING

Fig. 7 Terminal diagram 1MRK 001 054-ABA

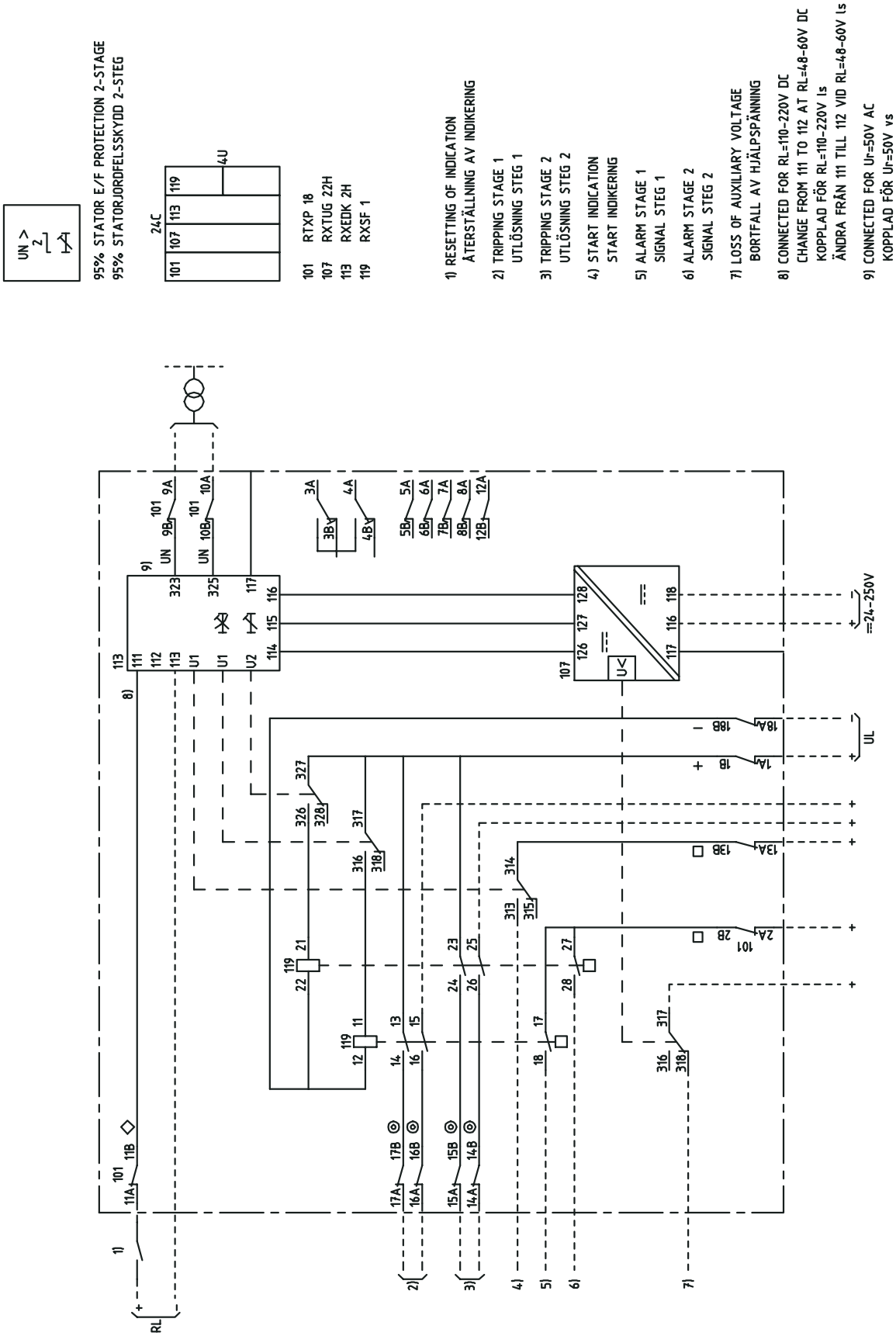

Fig. 8 Circuit diagram 1MRK 001 054-AB

9.2 RAGEK 100% stator E/F protection with voltage supervision

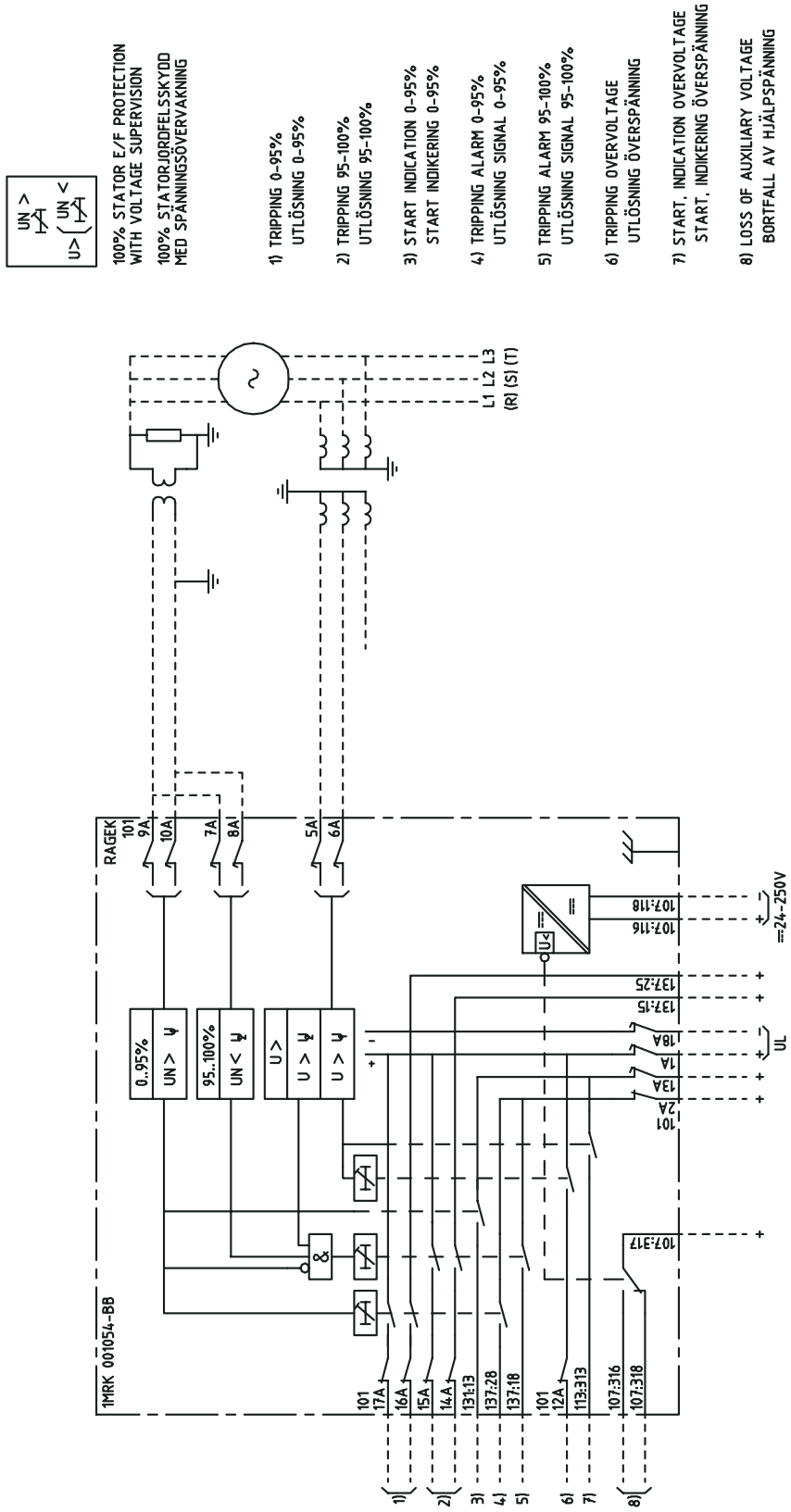

Fig. 9 Terminal diagram 1MRK 001 054-BBA

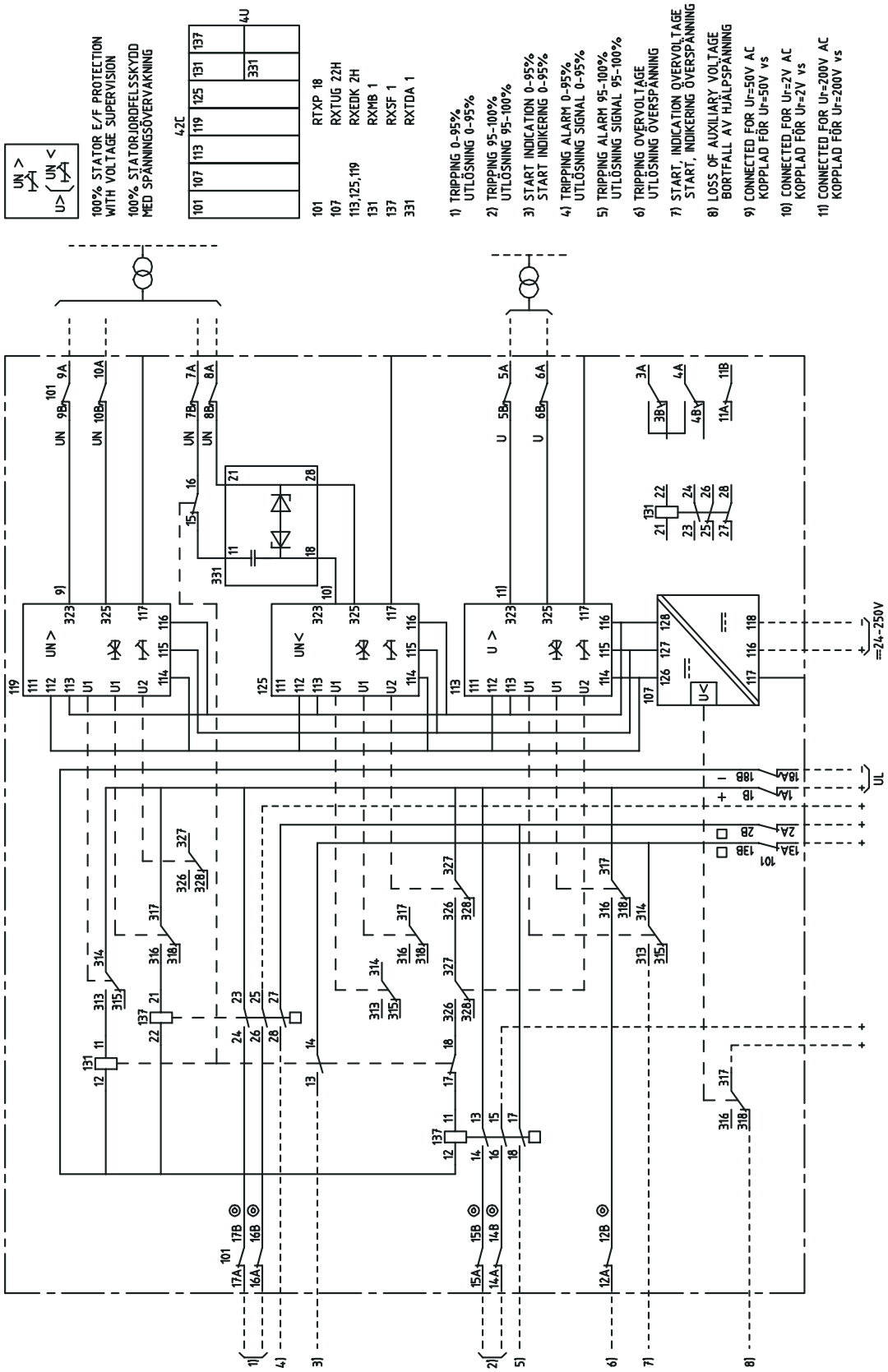

Fig. 10 Circuit diagram 1MRK 001 054-BB

9.3 RAGEK 100% stator E/F protection with current supervision

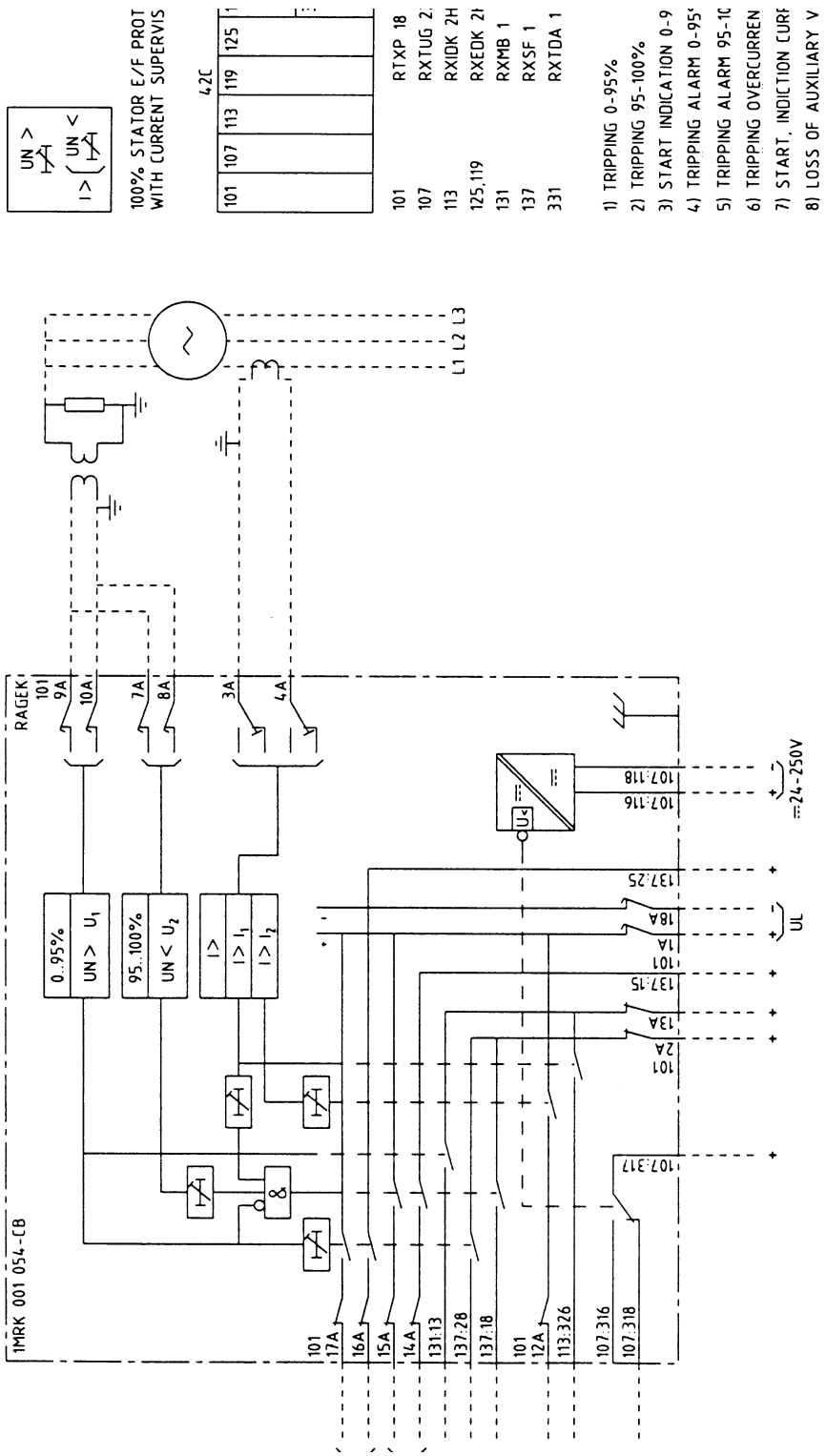

Fig. 11 Terminal diagram 1MRK 001 054-CBA

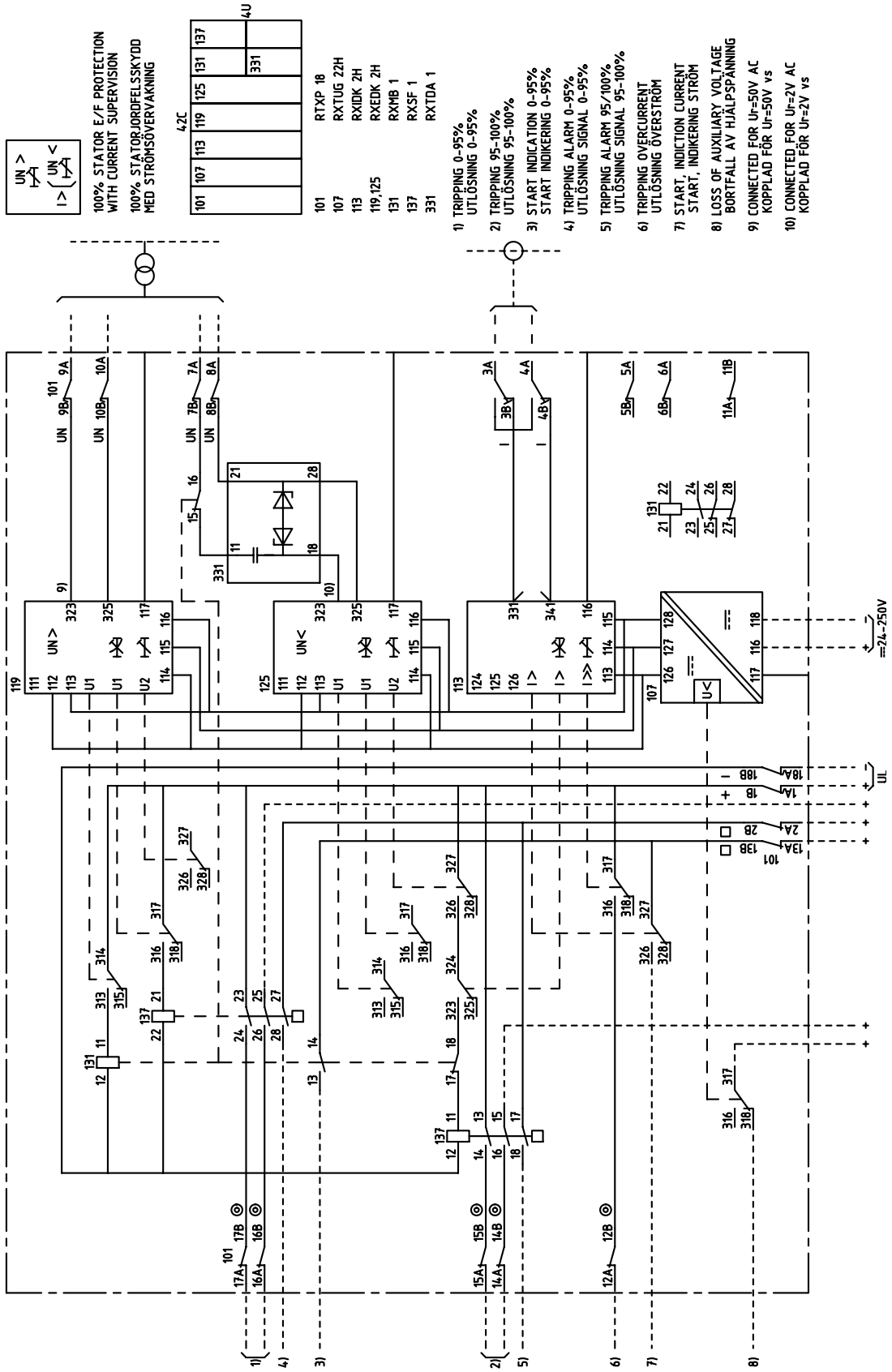

Fig. 12 Circuit diagram 1MRK 001 054-CB

Appendix A: Calculation of generator neutral point voltage in case of an earth-fault in the HV network

If sufficient data are available, the neutral point voltage transmitted to the generator stator circuits in case of an earth fault in the HV network can be calculated as shown below. If the HV side network is direct earthed and the generator is provided with a neutral point resistor, the transmitted voltage is normally reduced to max. 2-3% of rated generator phase voltage and a standard setting of U_N=5% is used. For generators connected to unearthed or high impedance earthed networks, the application of an earth fault in the HV net an measurement of the generator neutral point voltage can be a better alternative than to collect the necessary data for a calculation.

Calculation of the transmitted neutral point voltage:

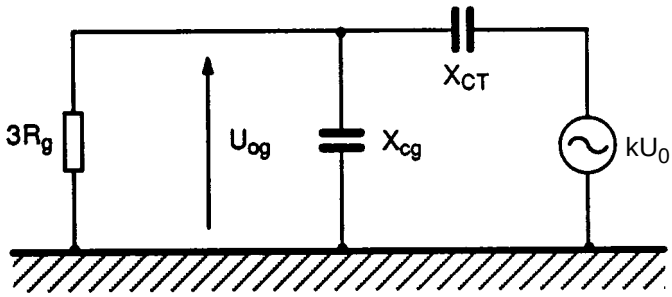

Fig. 13 Principle circuit for neutral point voltage transmitted

Rg = Generator neutral point resistance

X_{CT} = Impedance of the capacitive coupling between the HV and the LV winding of the step-up transformer

$$\frac{1}{\omega C_T} \text{ ohms per phase}$$

X_{Cg} = Impedance of the capacitive coupling between the stator circuits and earth

$$\frac{1}{\omega C_g} \text{ ohms per phase}$$

ω = $2\pi f$ (f =50 or 60 Hz)

C_T = capacitance per phase between the HV and the LV winding of the step-up transformer

C_g = capacitance per phase between the stator circuits and earth

k = 0,5 for direct earthed step-up transformer HV side, 1 for high impedance earthed HV system

U_0 = zero-sequence voltage on the HV side of the step-up transformer.

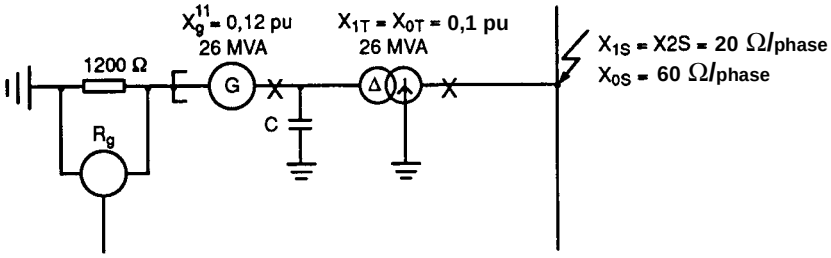

Fig. 14 Circuit data for U_N calculation

f = 50 Hz
C_T = 0,009 µF per phase
C_g = 0,3 µF per phase

$$X_T = \frac{1}{\omega C_T} = \frac{10^6}{2\pi \cdot 50 \cdot 0,009} = 354 \quad \text{kohm}$$

$$X_g = \frac{1}{\omega C_g} = \frac{10^6}{2\pi \cdot 50 \cdot 0,3} = 10,6 \quad \text{kohm}$$

Impedance referred to 110 kV side:

$$X''_g = \frac{110^2}{26} \cdot 0,12 = 56 \text{ ohms per phase}$$

$$X_{2g} = \frac{110^2}{26} \cdot 0,15 = 70 \text{ ohms per phase}$$

$$X_{IT} = \frac{110^2}{26} \cdot 0,1 = 47 \quad \text{ohms per phase}$$

$$X_{0T} = X_{1T} = 47 \text{ ohms}$$

Draw the positive, negative and zero sequence networks, simplify and calculate the zero sequence voltage U_0 as shown in Fig. 16.

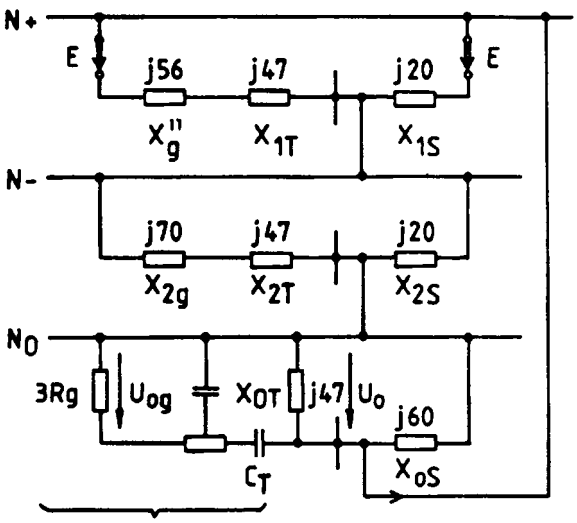

Fig. 15 Positive, negative and zero sequence network

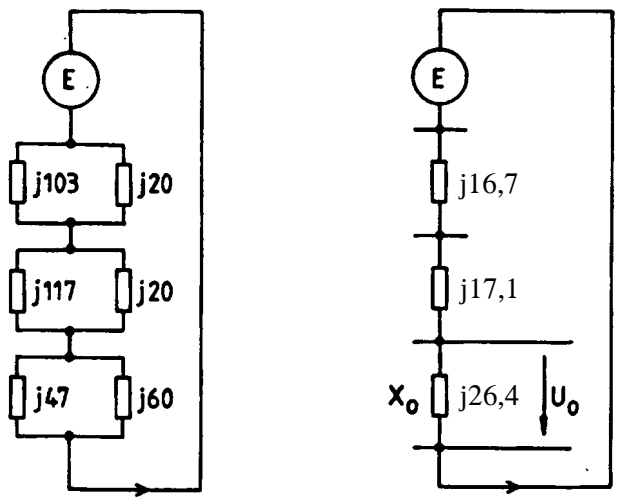

Fig. 16 Simplified network

$$E = \frac{110}{\sqrt{3}} \text{ kV}$$

$$U_0 = \frac{110}{\sqrt{3}} \cdot \frac{26,4}{16,7 + 17,1 + 26,4} = 27,9 \text{ kV}$$

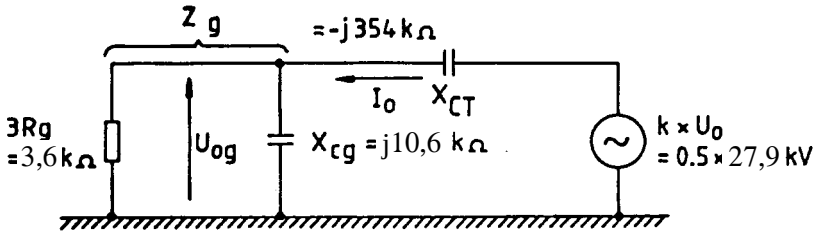

Fig. 17

$$Z_g = \frac{3,6 \cdot (-j10,6)}{3,6 - j10,6} = 3,2 - j1,1 = 3,38 \quad k\Omega$$

The current I_0 is basically determined by the high impedance $X_{CT.}$

$$I_0 \approx \frac{k \cdot U_0}{X_{CT}} = \frac{0,5 \cdot 27,9}{354} \quad A$$

$$U_{0g} \approx \frac{0,5 \cdot 27,9}{354} \cdot 3,38 = 0,134 \quad kV$$

$$\approx \frac{0,134 \cdot 100}{\frac{10,5}{\sqrt{3}}} = 2,2 \quad \text{\% of generator phase voltage}$$

The standard setting U_N = 5% will give ample margin.

ABB Network Partner AB
S-721 71 Västerås
Sweden
Tel +46 21 321300
Fax +46 21 146918