IB 7.4.1.7-8
Issue C

INSTRUCTIONS

Volts per Hertz Relay

TYPE 59F VOLTS PER HERTZ RELAY

Catalog Series 211H Standard Case

Catalog Series 411H Test Case

TABLE OF CONTENTS

Introduction.....Page 2
Precautions.....Page 2
Placing Relay into Service....Page 2
Application Data.....Page 3
Testing.....Page 7

INTRODUCTION

These instructions contain the information required to properly install, operate, and test the ABB Circuit-Shield™ Type 59F Volts per Hertz relay.

The relay is housed in a case suitable for conventional semiflush panel mounting. All connections to the relay are made at the rear of the case and are clearly numbered.

Relays of the 411H catalog series are similar to relays of the 211H series. Both series provide the same basic functions and are of totally drawout construction; however, the 411H series relays provide integral test facilities. Also, sequenced disconnects on the 411H series prevent nuisance operation during withdrawal or insertion of the relay.

Settings are made on the front panel of the relay, behind a removable clear plastic cover. The target indicator is reset by means of a pushbutton extending through the relay cover.

PRECAUTIONS

The following precautions should be taken when applying these relays:

1. Incorrect wiring may result in damage. Be sure wiring agrees with the connection diagram for the particular relay before energizing.

2. Apply only the rated control voltage marked on the relay front panel. The proper polarity must be observed when the dc control power connections are made.

3. For relays with dual-rated control voltage, withdraw the relay from the case and check that the movable link on the printed circuit board is in the correct position for the system control voltage.

4. High voltage insulation tests are not recommended. See the section on testing for additional information.

5. The entire circuit assembly of the relay is removable. The unit should insert smoothly. Do not use excessive force.

6. Follow test instructions to verify that the relay is in proper working order.

CAUTION: ***since troubleshooting entails working with energized equipment, care should be taken to avoid personal shock. Only competant technicians familiar with good safety practices should service these devices.***

PLACING THE RELAY INTO SERVICE

1. RECEIVING, HANDLING, STORAGE

Upon receipt of the relay (when not included as part of a switchboard) examine for shipping damage. If damage or loss is evident, file a claim at once and promptly notify Asea Brown Boveri. Use normal care in handling to avoid mechanical damage. Keep clean and dry.

2. INSTALLATION

Mounting:

The outline dimensions and panel drilling and cutout information is given in Fig. 1.

Connections:

Internal connections are shown in Figure 2. Typical external connections are shown in Figure 3. Control power must be connected in the proper polarity.

For relays with dual-rated control power: before energizing, withdraw the relay from its case and inspect that the movable link on the lower printed circuit board is in the correct position for the system control voltage. (For units rated 110vdc, the link should be placed in the position marked 125vdc.)

These relays have metal front panels which are connected through printed circuit board runs and connector wiring to a terminal at the rear of the relay case. The terminal is marked "G". In all applications this terminal should be wired to ground.

3. SETTINGS

PICKUP (VOLTS/HERTZ)

The pickup is set by means of a continuously adjustable dial on the front panel of the relay. The range is 1.8-3.0 volts/hertz on standard units.

TIME DIAL

The operating time is set by means of a continuously adjustable dial on the front panel of the relay. The dial is marked Min and Max. The max time is stamped on the bottom of the front panel. The desired operating time should be set by test.

4. TARGET INDICATOR

An operation target is provided. The target is set electronically when the output contacts transfer. The target will retain its indication on loss of dc control power. In order to reset the target, normal dc control power must be present and a "normal" ac voltage condition must exist; in other words, the volts/hertz must be less than the set point.

APPLICATION DATA

The ABB Circuit-Shield Type 59F Volts per Hertz relay is used to protect generators and transformers against overexcitation. Volts per Hertz is a measure of flux, which must be kept constant to avoid saturation.

At low frequencies (such as during start-up), voltages must be limited to less than rated volts at rated frequency, according to a constant volts per hertz relationship. This is basically derived from 120 volts (secondary) at 60 Hz., or 2 volts per Hertz. Therefore, with a relay setting of 2 volts/Hz., at 30 Hertz the relay will operate if the voltage is greater than 60 volts.

The Type 59F relay has two normally open contacts, one for alarm and one for tripping. The contact between terminals 11-12 closes immediately upon a volts/hertz condition above the pickup setting of the relay. If the condition persists for a period of time greater than the time delay setting, the contacts 13-14 will then close for tripping. The time delay characteristic is definite-time.

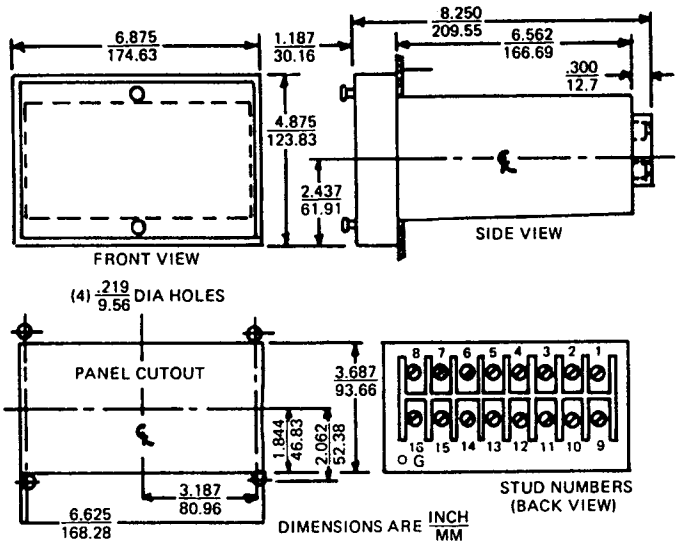

Figure 1: Relay Outling and Drilling

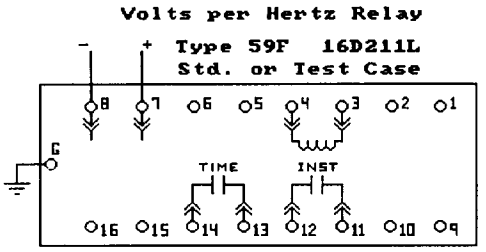

Figure 2: Internal Connections

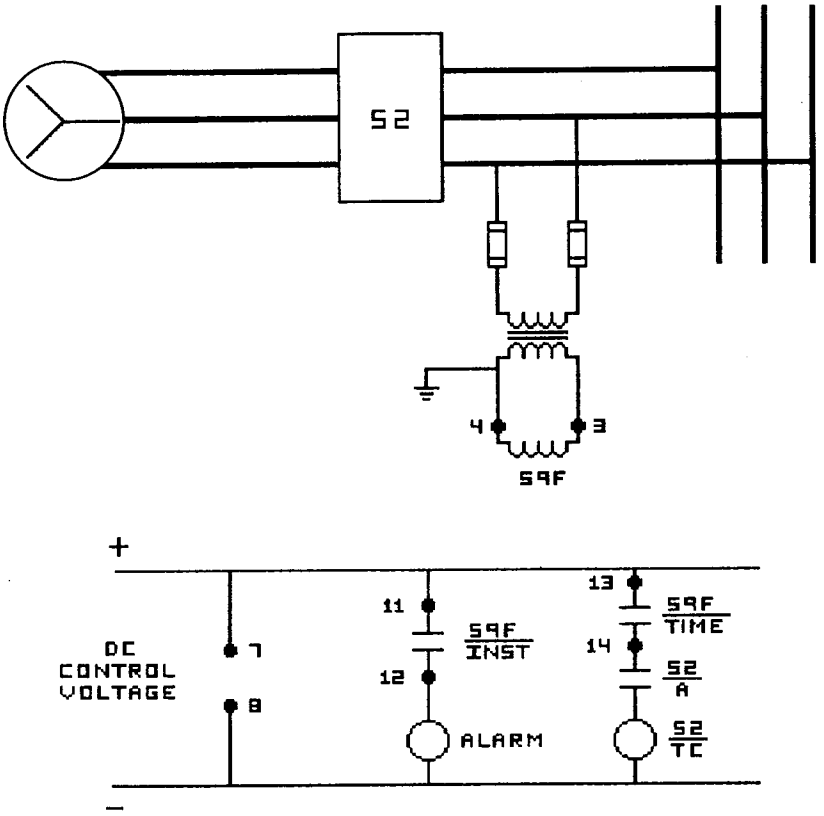

Figure 3: Typical External Connections

SPECIFICATIONS

Input Circuit:

Frequency Range: 15 Hz. to 72 Hz.

Rating: 45 volts @ 15 Hz. continuous
180 volts @ 60 Hz. continuous
216 volts @ 72 Hz. continuous

Pickup Range: 1.8 to 3.0 Volts per Hertz.

Burden: 0.01 VA, 1.0 pf at 120 volts.

Operating Time:

One contact: Instantaneous operation for alarm.
One contact: Definite-Time Characteristic for tripping.
See catalog number listing for available ranges.

Output Circuit:

Each contact @ 125 Vdc: 30 ampere tripping duty.
5 ampere continuous.
0.3 ampere break, inductive.

Operating Temperature Range: -20 to +70 deg. C.

Control Power:

Models available for 48/125 vdc @ 0.08 A max.
48/110 vdc @ 0.08 A max.
(consult factory for other control voltage ratings)

Allowable variation:

48vdc	"	38- 58v
110vdc	"	88-125v
125vdc	"	100-140v

Tolerances: Operating Voltage: +/- 5%

Dielectric Strength: 1500 vac, 50/60 Hz., 60 seconds, all circuits to ground.

Seismic Capability:

More that 6g ZPA biaxial broadband multifrequency vibration without damage or malfunction. (ANSI C37.98-1978)

CHARACTERISTICS OF COMMON UNITS

Type	Pickup Range	Time Delay Range	Control Voltage	Catalog Numbers Std Case	Catalog Numbers Test Case
59F	1.8-3.0 volts/hz	1 - 60 sec	48/125 vdc	211H4176	411H4176
			48/110 vdc	211H4106	411H4106
		0.5 - 15 sec	48/125 vdc	211H6176	411H6176
			48/110 vdc	211H6106	411H6106

Note: "Test-Case" units preferred for new applications, due to their improved testing features.

TESTING

1. MAINTENANCE AND RENEWAL PARTS

No routine maintenance is required on these relays. Follow test instructions to verify that the relay is in proper working order. We recommend that an inoperative relay be returned to the factory for repair; however, a schematic diagram will be provided on request. Renewal parts will be quoted by the factory on request.

211 Series Units
Drawout circuit boards of the same catalog number are interchangible. A unit is identified by the catalog number stamped on the front panel and a serial number stamped on the bottom side of the drawout circuit board.

The board is removed by using the metal pull knobs on the front panel. *Removing the board with the unit in service may cause an undesired operation.*

An 18 point extender board (cat 200X0018) is available for use in troubleshooting and calibration of the relay.

411 Series Units
Metal handles provide leverage to withdraw the relay assembly from the case. The assembly is identified by the catalog number stamped on the front panel and a serial number stamped on the bottom of the circuit board.

Test connections are readily made to the drawout relay unit by using standard banana plug leads at the rear vertical circuit board. This rear board is marked for easier identification of the connection points.

A test plug assembly, catalog 400X0002 is available for use with the 411 series units. This device plugs into the relay case on the switchboard and allows access to all external circuits wired to the case. See Instruction Book IB 7.7.1.7-8 for details on the use of this device.

2. HIGH POTENTIAL TESTS

High potential tests are not recommended. A hi-pot test was performed at the factory before shipping. If a control wiring insulation test is required, partially withdraw the relay unit from its case sufficient to break the rear connections before applying the test voltage.

3. BUILT-IN TEST FUNCTION

Be sure to take all necessary precautions if tests are run with the main circuit energized.

The built-in test is provided as a convenient functional test of the relay and associated circuit. When you depress the button labelled TRIP, the measuring and timing circuits of the relay are actuated, simulating an overexcitation condition. The instantaneous contact of the 59F should close immediately. If the test button is held continuously for a period of time greater than the time delay setting, the time contact should also close, tripping the associated circuit, and the target should be displayed.

4. ACCEPTANCE TESTS

A typical test circuit is shown in Figure 5. Set internal control voltage selector plug to the proper position and apply dc control voltage to the relay. Set relay pickup dial to 2.0 volts/hz and time dial to maximum. Reset the target. Using a 60 Hertz test source, slowly increase the input voltage until the instantaneous contact (11-12) closes. The operating voltage should be between 114 and 126 volts.

Open switch S1 and reset the external timer. Set the ac source voltage to 135v, 60Hz. Close switch S1. The relay's time delay contact (14-15) should operate to stop the timer in 60-72 seconds for the 60 second model, or 15-20 seconds for the 15 second model. The target should be displayed. Reduce the ac input voltage to 110 vac. Both contacts should drop out. Reset the target.

5. CALIBRATION

Once the settings required for the application are known, the basic test procedures given in paragraph 4 should be repeated, and the relay's pickup and time dials adjusted to obtain the required operating values.

If a variable frequency source is available, check the relay's pickup at 30 Hertz.

In the event recalibration of the front panel dials is necessary, the following internal calibration potentiometers are provided: R7 volts/hz pickup; R26 time delay at mimimum time dial position; R25 time delay at maximum time dial position. (there will be some interaction between R25 and R26.)

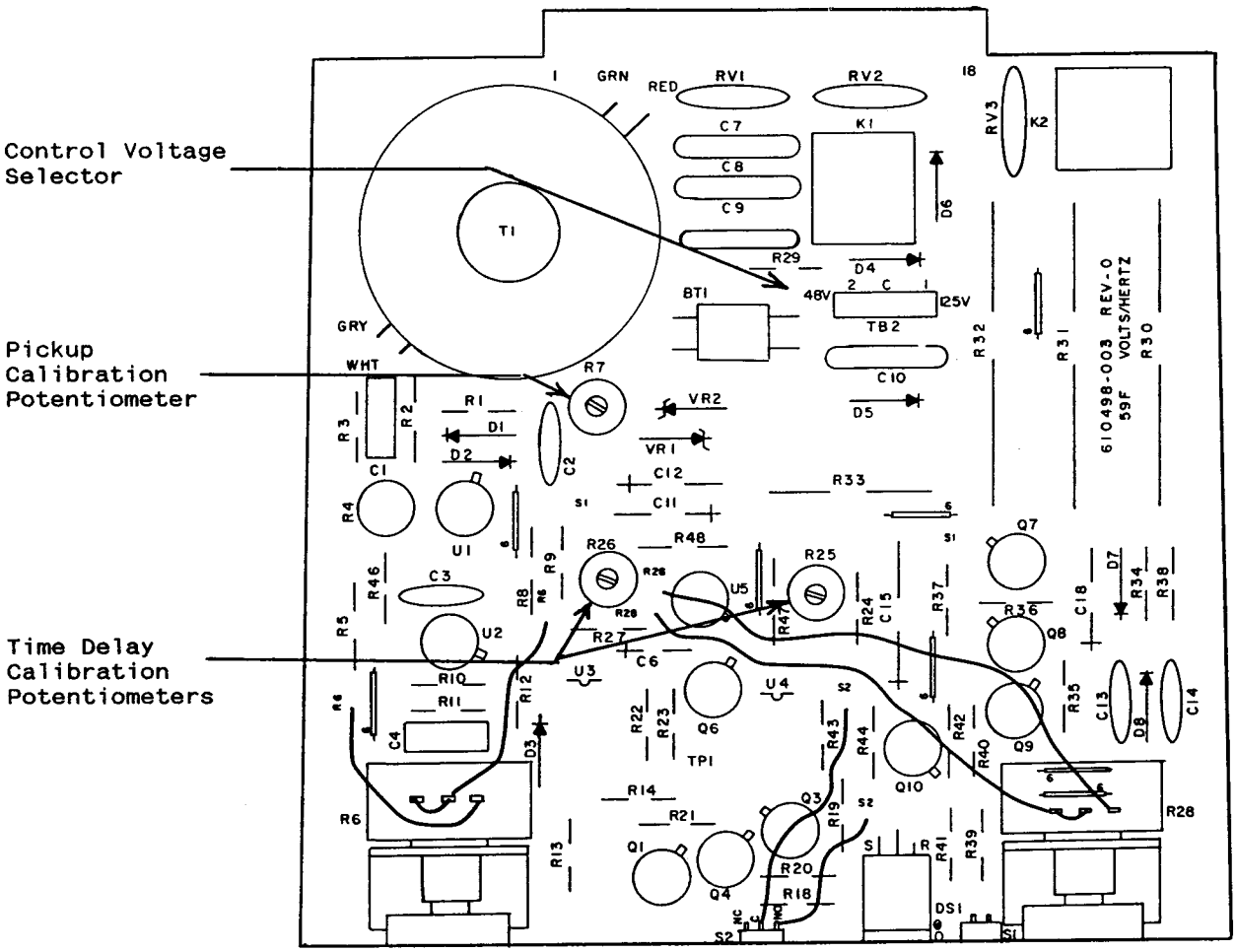

Figure 4: Typical Circuit Board Layout

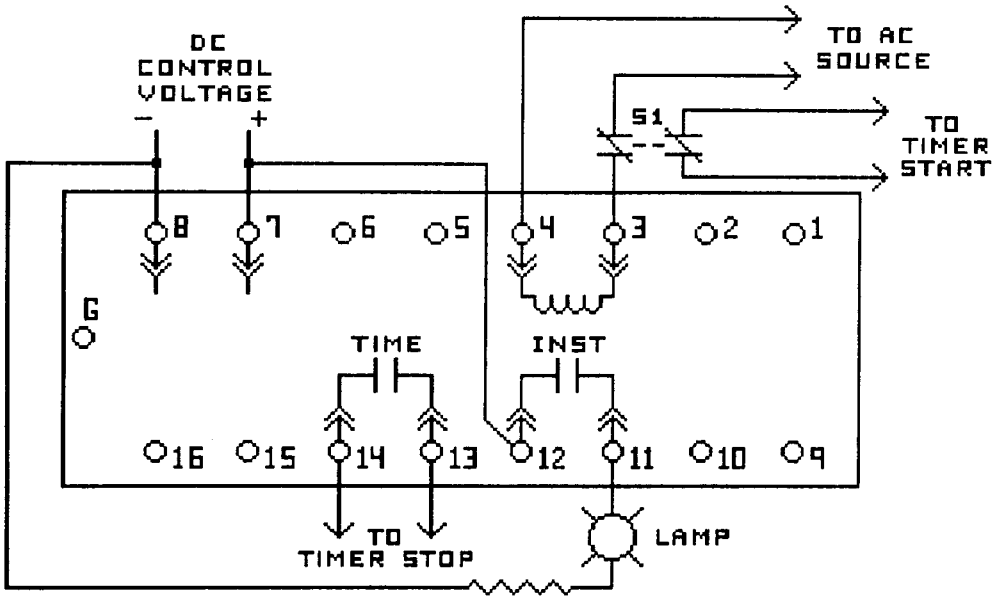

Figure 5: Typical Test Connections

These instructions do not purport to cover all details or variations in equipment, nor to provide for every possible contingency to be met in conjunction with installation, operation, or maintenance.