User Guide
IM/ZDT/GP_5

Zirconia Oxygen Analyzer

High Temperature Version
ZDT–GP Series

ABB

The Company

We are an established world force in the design and manufacture of instrumentation for industrial process control, flow measurement, gas and liquid analysis and environmental applications.

As a part of ABB, a world leader in process automation technology, we offer customers application expertise, service and support worldwide.

We are committed to teamwork, high quality manufacturing, advanced technology and unrivalled service and support.

The quality, accuracy and performance of the Company's products result from over 100 years experience, combined with a continuous program of innovative design and development to incorporate the latest technology.

The UKAS Calibration Laboratory No. 0255 is just one of the ten flow calibration plants operated by the Company and is indicative of our dedication to quality and accuracy.

EN ISO 9001:2000

Cert. No. Q 05907

EN 29001 (ISO 9001)

Lenno, Italy – Cert. No. 9/90A

Stonehouse, U.K.

0255

Electrical Safety

This equipment complies with the requirements of CEI/IEC 61010-1:2001-2 'Safety Requirements for Electrical Equipment for Measurement, Control and Laboratory Use'. If the equipment is used in a manner NOT specified by the Company, the protection provided by the equipment may be impaired.

Symbols

One or more of the following symbols may appear on the equipment labelling:

⚠	**Warning** – Refer to the manual for instructions
⚠	**Caution** – Risk of electric shock
⏚	Protective earth (ground) terminal
⏚	Earth (ground) terminal

⎓	Direct current supply only
∼	Alternating current supply only
≂	Both direct and alternating current supply
⧈	The equipment is protected through double insulation

Information in this manual is intended only to assist our customers in the efficient operation of our equipment. Use of this manual for any other purpose is specifically prohibited and its contents are not to be reproduced in full or part without prior approval of the Technical Publications Department.

Health and Safety

To ensure that our products are safe and without risk to health, the following points must be noted:

1. The relevant sections of these instructions must be read carefully before proceeding.
2. Warning labels on containers and packages must be observed.
3. Installation, operation, maintenance and servicing must only be carried out by suitably trained personnel and in accordance with the information given.
4. Normal safety precautions must be taken to avoid the possibility of an accident occurring when operating in conditions of high pressure and/or temperature.
5. Chemicals must be stored away from heat, protected from temperature extremes and powders kept dry. Normal safe handling procedures must be used.
6. When disposing of chemicals ensure that no two chemicals are mixed.

Safety advice concerning the use of the equipment described in this manual or any relevant hazard data sheets (where applicable) may be obtained from the Company address on the back cover, together with servicing and spares information.

CONTENTS

1 INTRODUCTION

The ZDT Oxygen Analyzer is designed for continuous monitoring of oxygen content in applications using 'in situ' ZGP2 probes.

Operation and programming of the ZDT Analyzer is via four tactile membrane switches and a digital display located on the front of the instrument. Two l.e.d.'s on the front panel provide local alarm indication.

In operation, the instrument can display measured % oxygen, cell mV, or cell temperature. Set up of alarm, retransmission and calibation parameters is achieved in programming mode, where key parameters are protected by a five-digit security code.

Measured $\%O_2$ values can be retransmitted to remote equipment using the retransmission output facility. The range of values retransmitted can be set anywhere within the instrument's display range of 0 to 25% O_2, subject to limits detailed in Section 7.7.

Remote alarm indication is provided by two relay outputs. Relays are programmed to activate when the oxygen level moves either above or below a pre-defined set point. The second alarm relay can also be used as a 'general alarm' which activates in the event of an instrument or system fault.

An optional external reference air unit is used to provide reference air supply for the ZGP2 probe. If this unit is not specified, reference air must be supplied to the probe from an alternative source.

For full installation and operation details of the ZGP2 probe refer to the operating manual, *IM/ZGP2*.

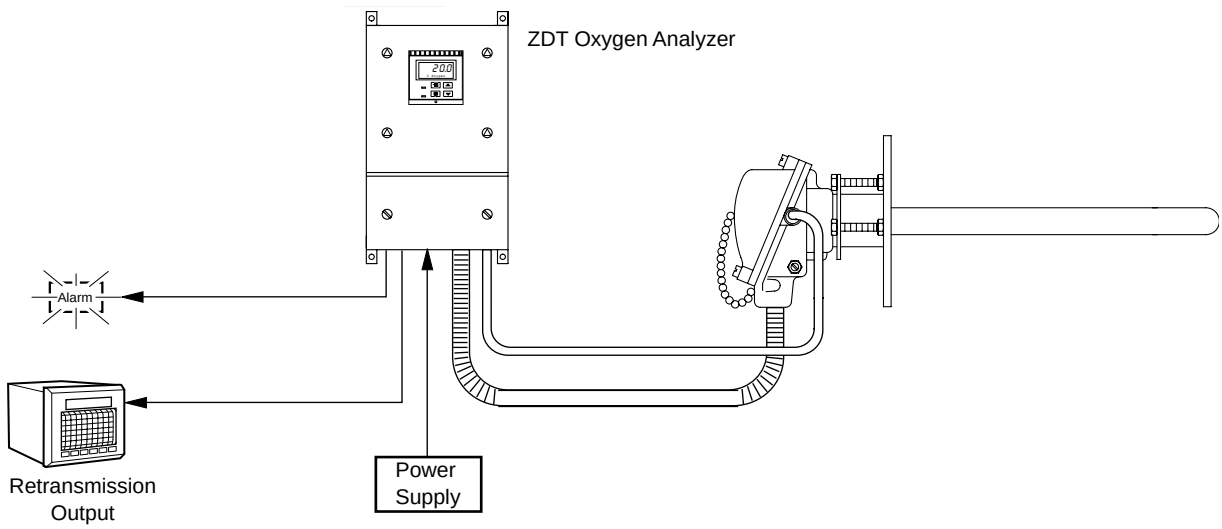

Fig. 1.1 Schematic Diagram

2 PREPARATION

2.1 Checking the Instrument Type – Fig. 2.1

Warning
Both front panels are held in position by the front panel screws only and are not otherwise captive.

When removing panels, ensure they are adequately supported.

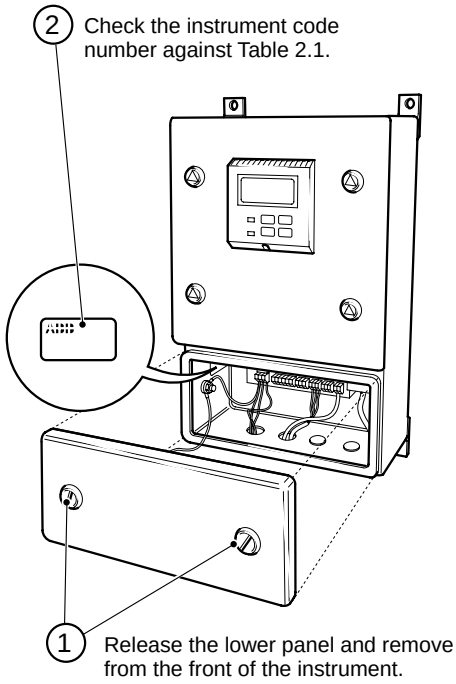

Fig. 2.1 Checking the Code Number

ZDT Oxygen Analyzer	**ZDT/**	**X**	**X**	**X**	**X**
Probe Type	ZGP2	1			
Thermocouple Type	None		0		
	Type K		1		
	Type R		2		
	Type S		3		
Reference Air Supply	None			0	
	External Output			1	
Mains Voltage	230V 50/60Hz				0
	110V 50/60Hz				1

Table 2.1 Instrument Identification

3 MECHANICAL INSTALLATION

3.1 Siting Requirements – Fig. 3.1

The instrument is designed for wall mounting and weighs approximately 9kg (20lb).

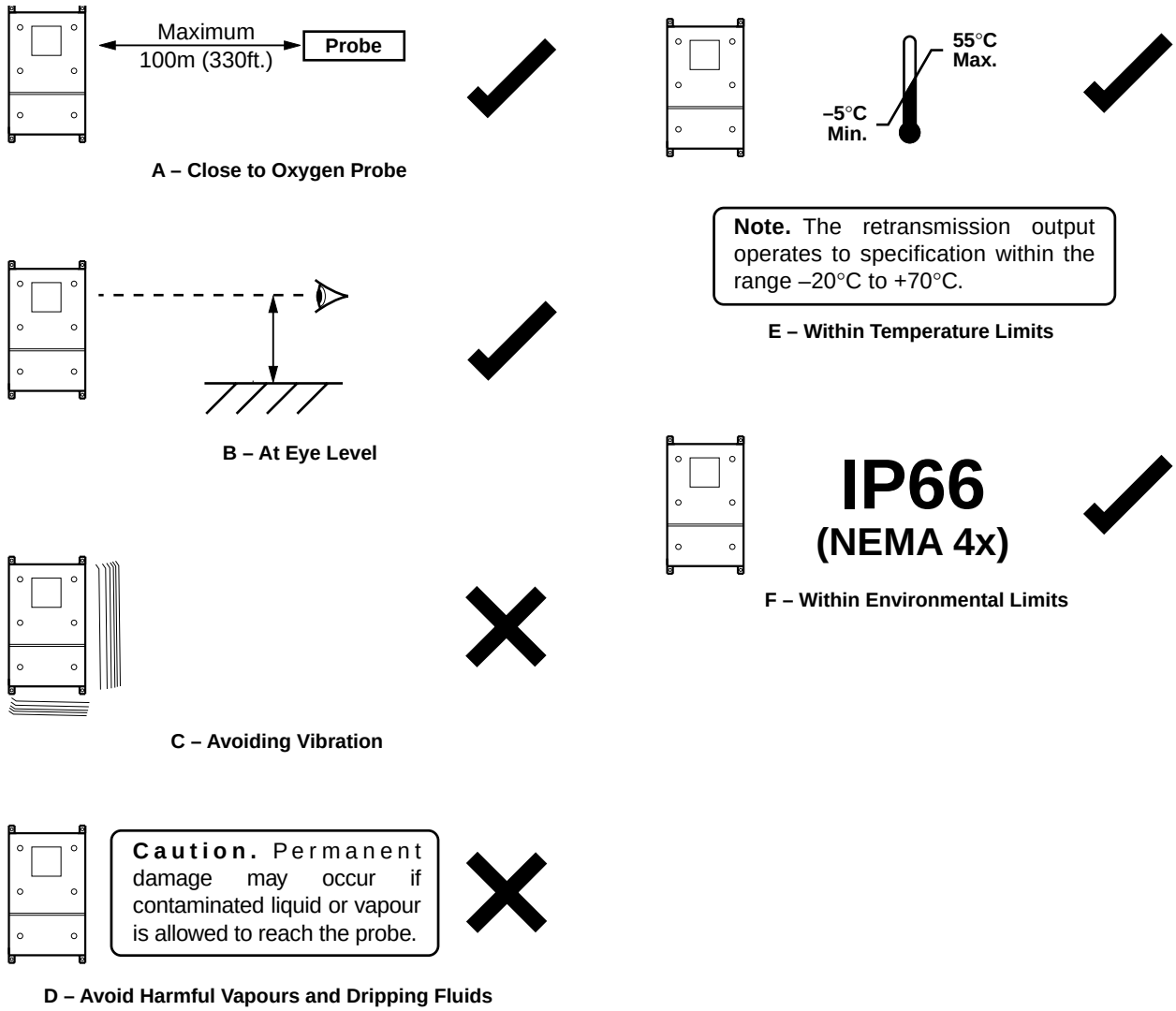

Fig. 3.1 Siting Requirements

3.2 Overall Dimensions – Fig 3.2

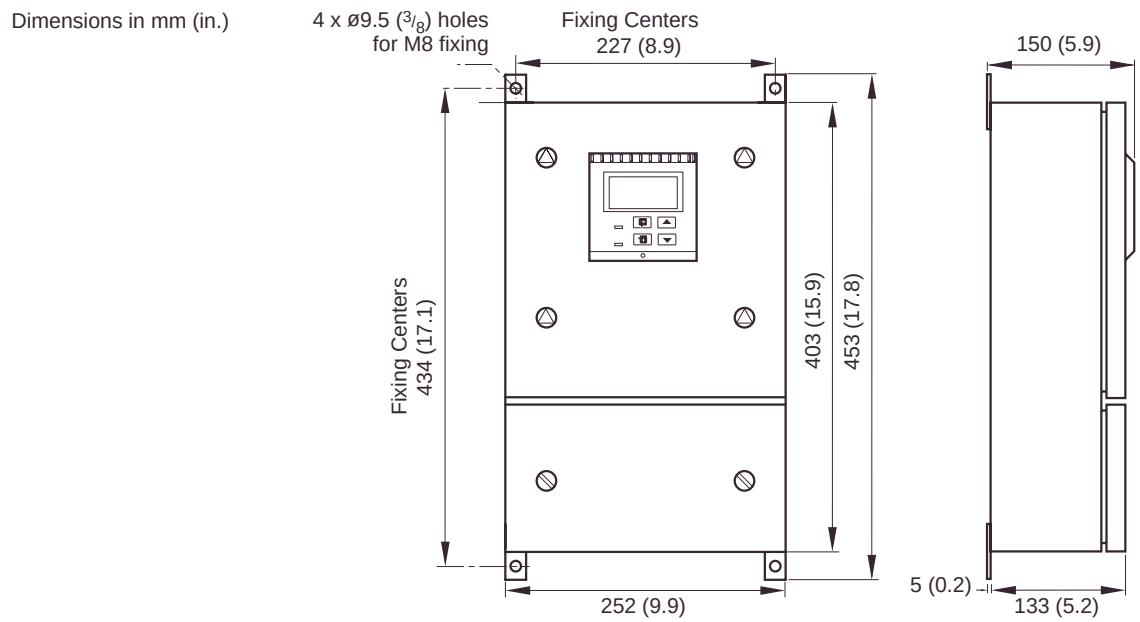

Fig. 3.2 Overall Dimensions

3.3 Mounting – Fig. 3.3

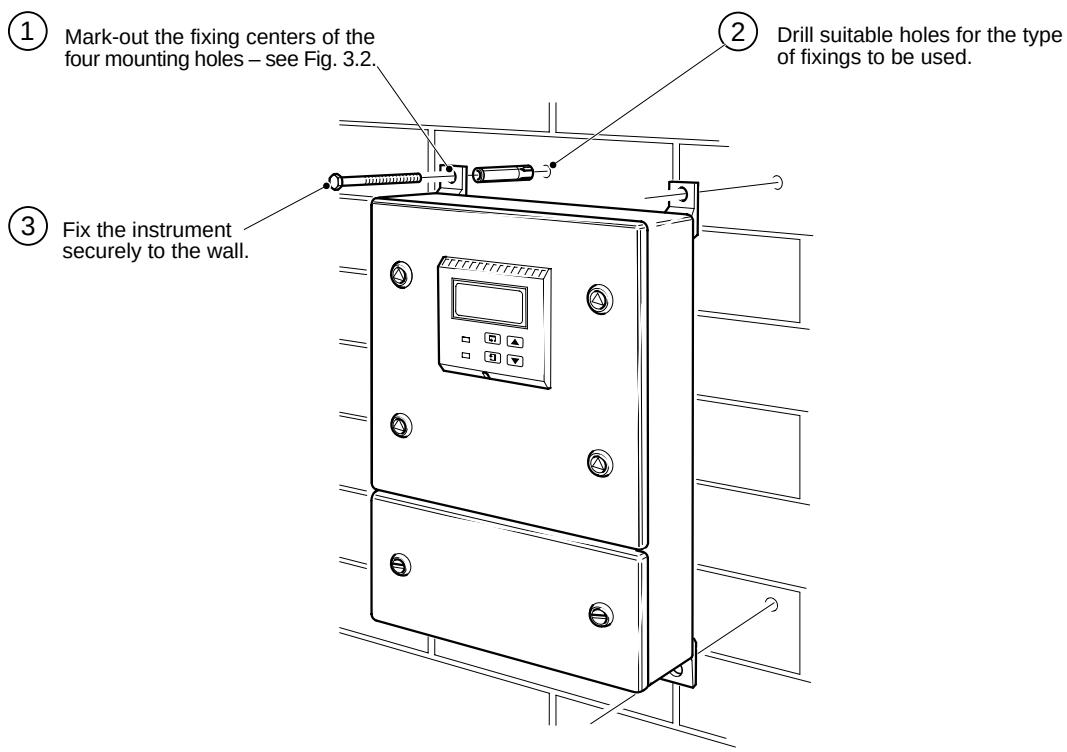

Fig. 3.3 Mounting Details

4 CONNECTIONS

Warning.
- Mains power – before making any connections, ensure that the power supply, any powered control circuits and high common-mode voltages are switched off.

4.1 Cable, Tubing and Gland Specifications

Information.
- Five 22mm diameter cable entries are provided in the base of the terminal chamber. The cable entries accept M20 glands (not supplied).
- External reference air connections are made via $^1/_4$ in. compression fittings.

Cable/Tubing Reference	Description
Cell output cable	16/0.2mm laid up red and blue twin copper braid with overall p.v.c. sheath
Thermocouple cable	See Table 4.2
Air Tubing (Reference Air)	$^1/_4$ in. o.d. x $^1/_8$ in. i.d. stainless steel, nylon or p.v.c. tube

Table 4.1 Cable References and Air Tubing Specification

Type of Thermocouple	Compensating Cable								
	British BS1843; 1952			German DIN 43714			American ANSI IMC96.1		
	+	–	Case	+	–	Case	+	–	Case
Ni-Cr/Ni-Al (**Type K**)	Brown	Blue	Red	Red	Green	Green	Yellow	Red	Yellow
Pt/Pt-Rh (**Types R and S**)	White	Blue	Green	Red	White	White	Black	Red	Red

Table 4.2 Cable Colours

4.2 Electrical Connections

4.2.1 General

Information.
- **Earthing (grounding)** – a stud terminal is fitted to the case bus-bar earth (ground) connection – see Fig. 4.1
- **Cable routing** – always route signal output cables and mains-carrying/relay cables separately, ideally in earthed metal conduit. Twist the signal output leads together or use screened cable with the screen connected to the case earth stud.

  Use only the cables and air tubing specified in Table 4.1.

  Fit suitable cable glands into the entries to be used and blank-off any unused entries using the bungs supplied.

  Ensure that the cables enter the instrument through the glands nearest the appropriate screw terminals and are short and direct. Do not tuck excess cable into the terminal compartment.
- **Relays** – the relay contacts are voltage-free and must be connected in series with a power supply and the alarm/control device which they are to actuate. Ensure that the contact rating is not exceeded.

  Refer also to Section 4.2.4 for relay contact protection details when the relays are to be used for switching loads.
- **Retransmission output** – Do not exceed the maximum load specification for the selected current retransmission range (see the associated specification sheet, SS/ZDT/GP).

  The retransmission output is isolated. Therefore the –ve terminal must be connected to earth (ground) if connecting to the isolated input of another device.

4.2.2 Access to Terminals – Fig. 4.1

Warning
Both front panels are held in position by the front panel screws only and are not otherwise captive.

When removing panels, ensure they are adequately supported.

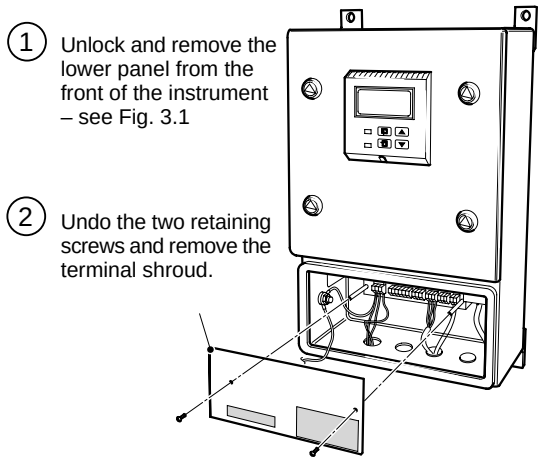

Fig. 4.1 Access to Terminals

4.2.3 Connections – Fig. 4.2

① Mains:
- Live to ‘L’
- Neutral to ‘N’
- Earth to ‘E’

② Retransmission Output (4 to 20mA):
- Positive to ‘RTX +’
- Negative to ‘RTX –’

③ Relay outputs 1 and 2
- ‘N/C’ – normally closed
- ‘C’ – common
- ‘N/O’ – normally open

④ Secure the probe conduit fitting in the appropriate gland and make the following connections:

Cell output –	red to ‘CELL +’
	blue to ‘CELL –’
	screen to ‘CELL SCR’
Thermocouple –	see Table 4.2

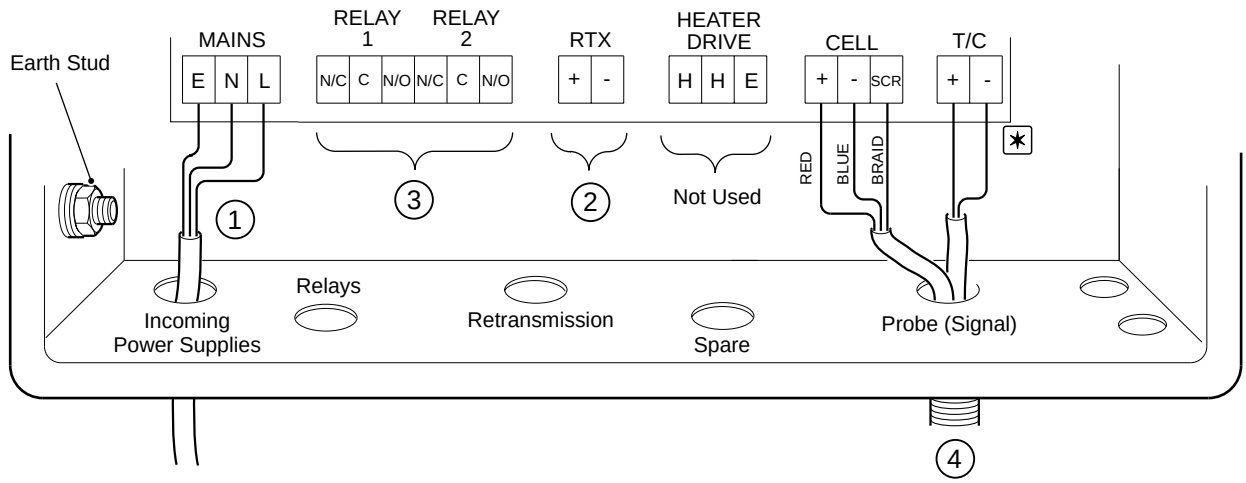

Note. Core colour dependent on cable type – see Table 4.2

Fig. 4.2 Electrical Connections

4.2.4 Relay Contact Protection and Interference Suppression – Fig. 4.3

To reduce the risk of instrument malfunction or incorrect readings when switching inductive loads, suppression components must be fitted across the relay contacts.

For a.c. applications, fit a 100R/0.022µF RC suppressor unit (part no. B9303) as shown in Fig. 4.3A. If the instrument malfunctions (incorrect readings) or resets (display shows '88888') when the relays operate, a larger RC network is required. Contact the manufacturer of the switched device for details of the RC unit required.

For d.c. applications fit a diode, – see Fig. 4.3B. For general applications use a 1N5406 type (600V peak inverse voltage at 3A – part no. B7363).

Note. For reliable switching the minimum voltage must be greater than 12V and the minimum current greater than 100mA.

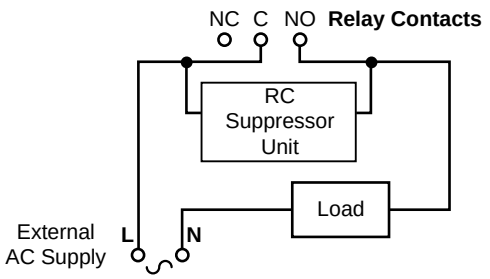

A – AC Applications

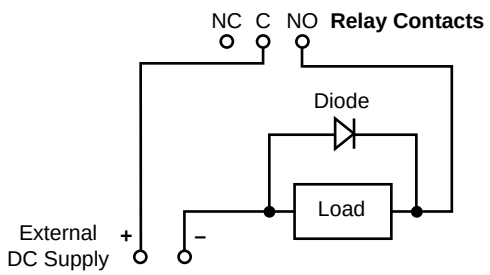

B – DC Applications

Fig. 4.3 Relay Contact Protection

4.3 Selecting the Mains Input Voltage – Fig. 4.4

Input voltages (230V or 110V) for the main analyzer p.c.b. and the probe heater supply p.c.b. are selected by two switches located on their respective p.c.b.'s.

Caution.
Both front panels are held in position by the front panel screws only and are not otherwise captive. When removing panels, ensure they are supported adequately.

Caution. Set both switches to the same position, otherwise permanent damage to the instrument may occur.

1. Unlock and carefully open the upper front panel ensuring it is fully supported. See **Caution**.
2. Disconnect the front panel ribbon cable at the main p.c.b. end. See **Caution**.
3. Identify the selector switch on the main p.c.b. and select the required mains voltage for the main p.c.b.
4. Identify the selector switch on the probe heater supply p.c.b. and select the required mains voltage.
5. Offer the front panel up to the enclosure and reconnect the ribbon cable.
6. Replace the upper front panel and lock securely. See **Caution**.

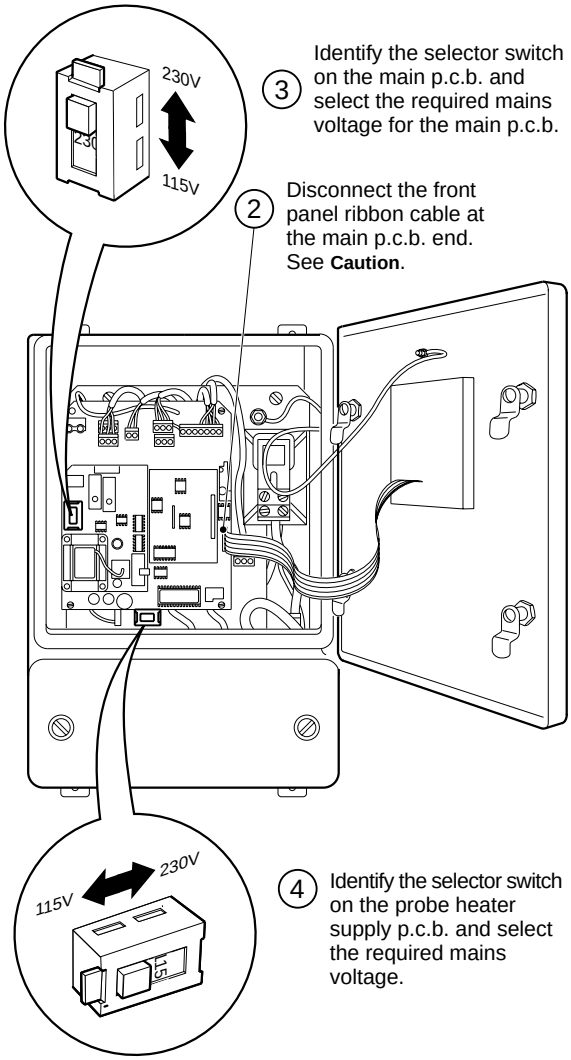

Fig. 4.4 Selecting the Mains Input Voltage

4.4 Replacing the Fuses – Fig 4.5

The instrument is protected by two fuses located on the probe heater supply p.c.b. In order to replace the fuses, the main analyzer p.c.b. must be removed for access as shown.

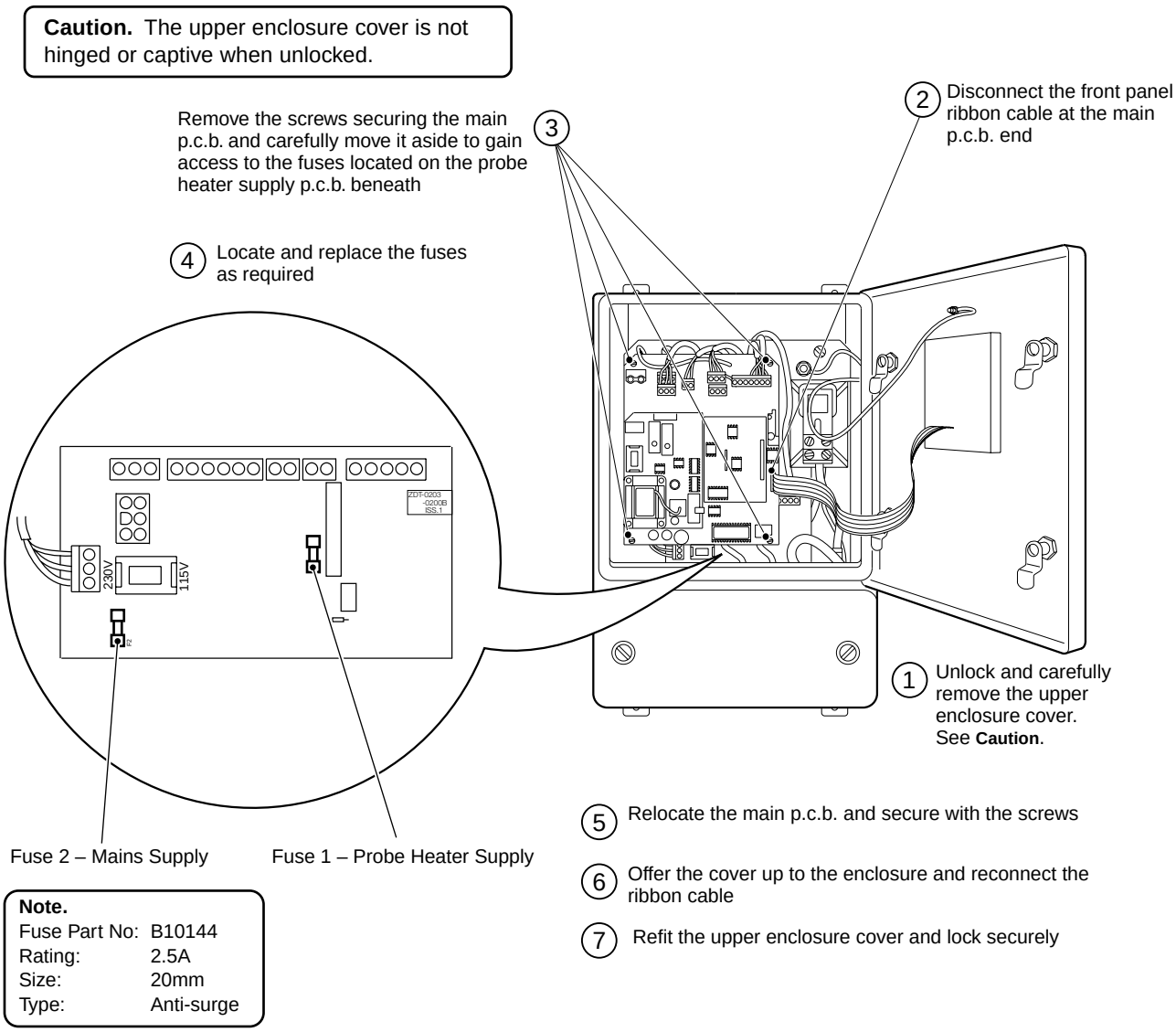

Fig. 4.5 Replacing the Fuses

4.5 Reference Air Supply – Fig. 4.6

ZDT Analyzer Code Number	Reference Air Supply
ZDT/11**0**X No reference air supply.	Reference air to the probe must be provided from a separate source – refer to the installation and operating instructions supplied with the probe.
ZDT/11**1**X Reference air supply with external connection.	For use with any ZGP2 probe.

Table 4.3 Analyzer and Probe Compatibility

Information. The location of the Analyzer code number is shown in Fig. 2.1. Refer to the probe's operating instructions, *IM/ZGP2,* for information on locating the code number of the probe.

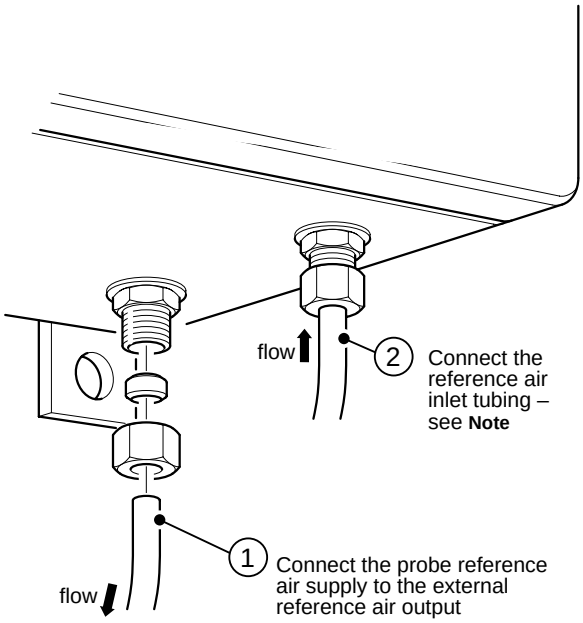

Note. Permanent damage may occur if contaminated air surrounding the instrument is allowed to reach the probe head. If necessary, to prevent contaminated air or water being pumped via the analyzer to the probe head, connect a length of suitable piping to the reference air inlet gland and route to an uncontaminated environment.

Fig. 4.6 External Reference Air Connections

5 CONTROLS AND DISPLAYS

5.1 Displays – Fig. 5.1

The display comprises a 5-digit, 7-segment digital upper display line and a 16-character dot-matrix lower display line. In operation, the upper display line shows actual values of % oxygen, temperature, cell millivolts or alarm set points. In programming mode it is used to display, programmable parameters. The lower display line shows the associated units and/or other programming information.

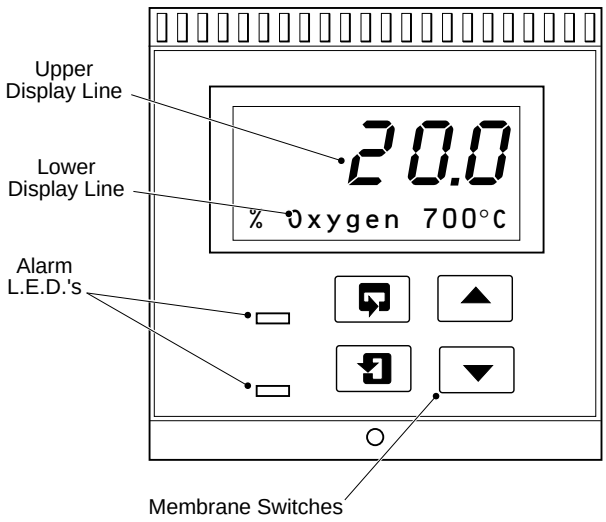

Fig. 5.1 Location of Displays and Controls

5.2 Switch Functions – Fig. 5.2

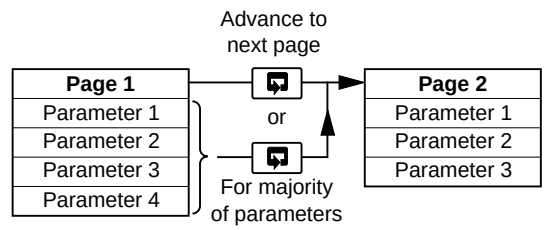

A – Advancing to Next Page

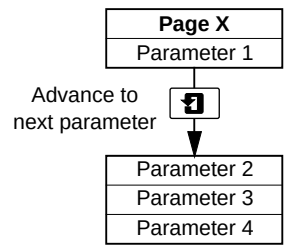

B – Moving Between Parameters

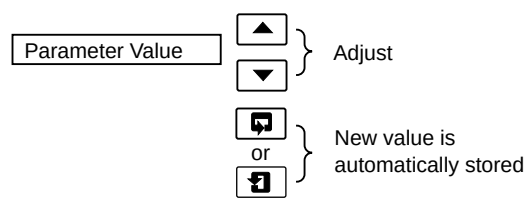

C – Adjusting and Storing a Parameter Value

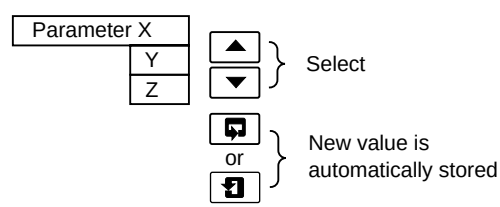

D – Selecting and Storing a Parameter Choice

Fig. 5.2 Membrane Switches

6 OPERATION

6.1 Instrument Start-up

Ensure all electrical connections have been made correctly and apply power to the instrument.

6.2 Operating Page

The operating page is a general use page in which continuously updated measured values and preset parameters can be viewed but not altered. To adjust or set a parameter refer to the programming pages in Section 7.

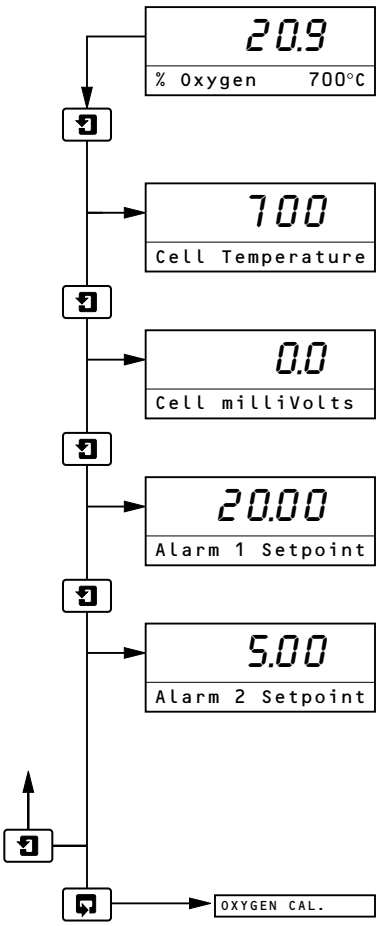

% Oxygen
The upper display indicates the measured oxygen value. If over or under temperature is monitored, the upper display shows '------' and an error message is displayed on the lower dot matrix display – see Section 6.3.
The lower display indicates the measured cell temperature in °C.

Cell Temperature (°C)
The upper display indicates the measured cell temperature in °C.

Cell Millivolts
The upper display indicates the measured cell millivolts.

Alarm 1 Set Point
The upper display indicates the alarm 1 set point, displayed as % oxygen. The set point value and the relay/l.e.d. action is programmed in the **Set Up Outputs Page** – see Section 7.7.

Alarm 2 Set Point

Note. This frame is not displayed if the 'Alarm 2 Action' parameter has been set to 'General Alarm' – see Section 7.7.

The upper display indicates the Alarm 2 set point, displayed as % oxygen.

Press ⏎ to return to the top of the **Operating Page.**

Press ⏎ to advance to **Oxygen Calibration Page.**

Note. If Alarm 2 has been programmed as a general system/instrument alarm, the associated front panel l.e.d. is illuminated when the alarm is active and Relay 2 has de-energized.

6.3 Operating Page Error Messages

When an error has been detected, the following error messages appear in the **Operating Page**, in place of the % oxygen scroll.

Error Message	Possible Cause
NV MEMORY ERROR	The contents of the non-volatile memory have not been read correctly during power up. To rectify the fault, switch off, wait 10 seconds and switch on again. If the fault persists contact the Company.
CELL WARMING UP	The probe has not reached a sufficient temperature to obtain suitable readings (<600°C).
CALIBRATION FAIL	The last single- or two-point calibration failed.
T/C OPEN CIRCUIT	The thermocouple connections are open circuit or the thermocouple temperature is greater than 1200°C/2192°F (type K thermocouple) or 1500°C/2732°F (type R & S thermocouples).

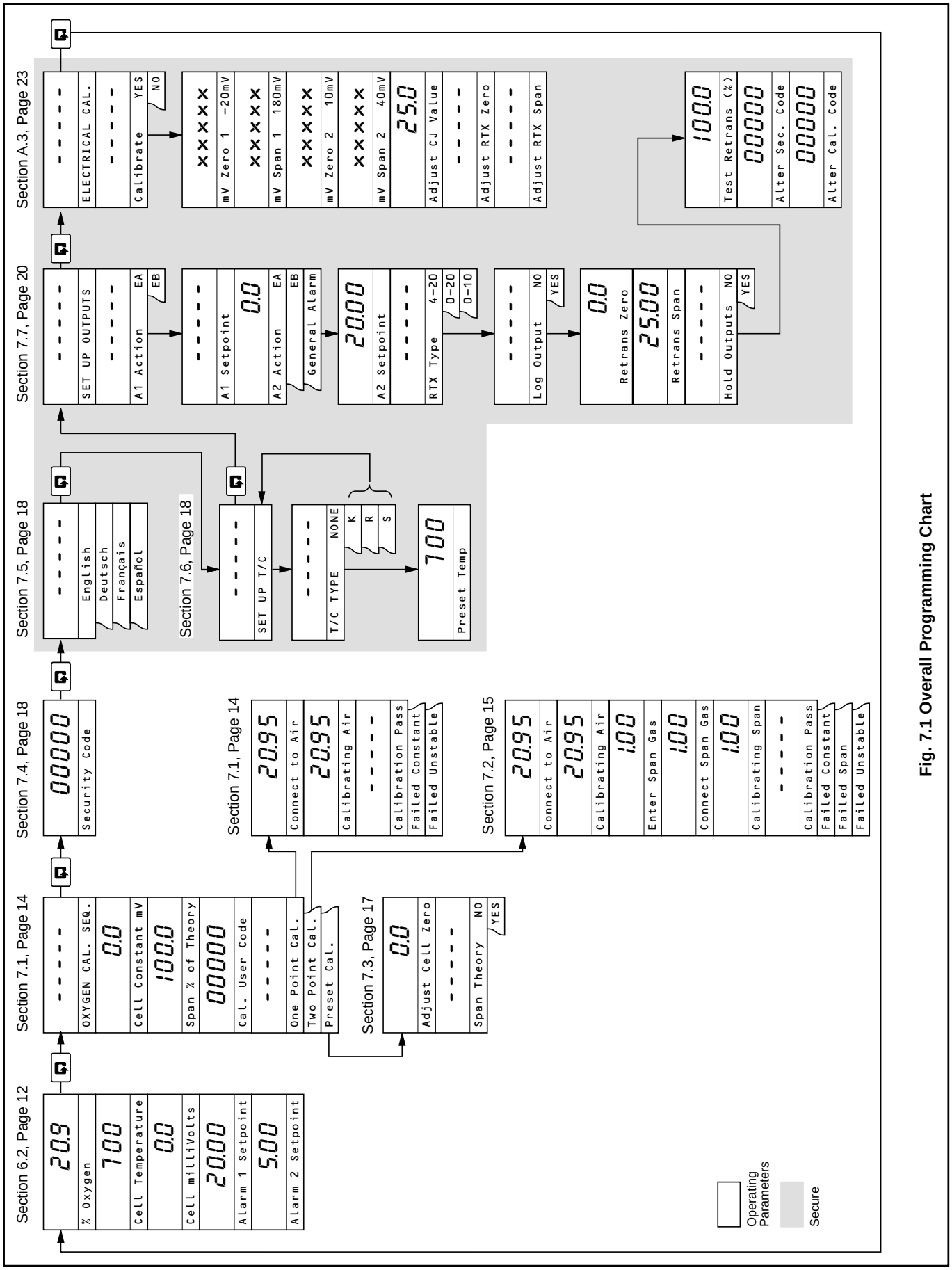

Fig. 7.1 Overall Programming Chart

Note. Before commencing a gas calibration procedure the analyzer and probe must be switched on and allowed to run for at least one hour to allow the system to stabilize thermally.

7.1 Single-point Calibration

Calibration sequence involves standardizing the analyzer and the oxygen probe, using air as the test gas. Until a calibration sequence has been completed successfully, the existing slope remains unaffected.

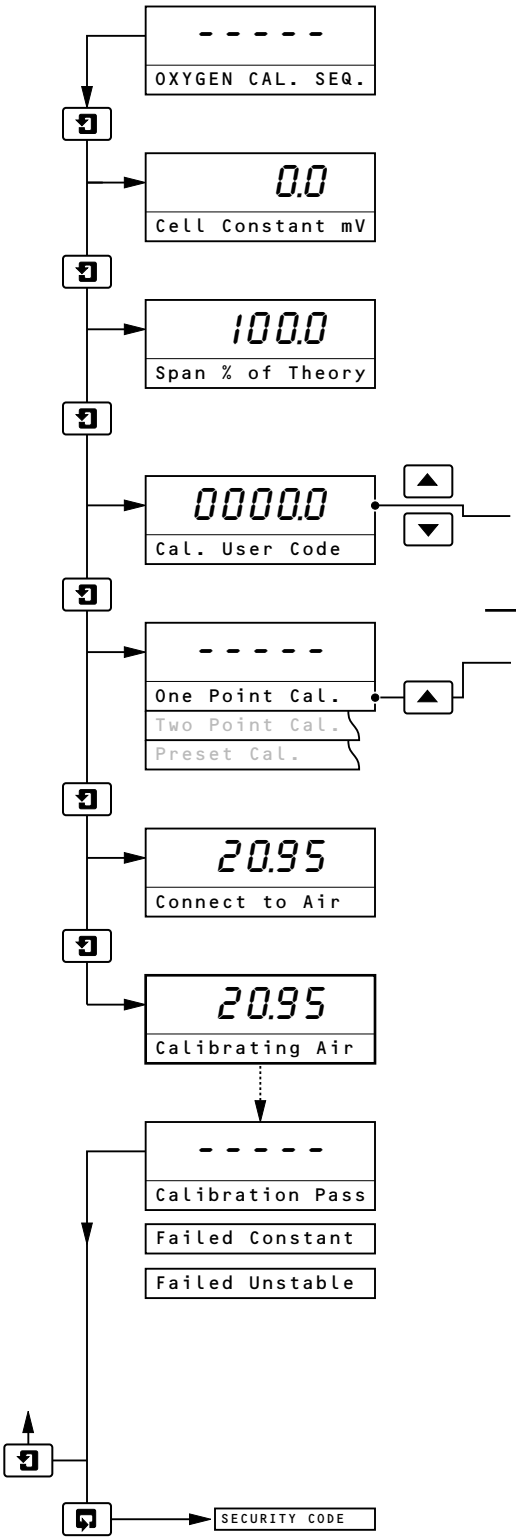

Oxygen Calibration Sequence

Cell Zero mV
The upper display shows the millivolt offset of the oxygen probe from the last successful calibration.

Span % of Theory
A value between 90 and 110% should be displayed. The display indicates the oxygen probe output slope using parameters derived at the last successfull two-point calibration or the preset values.

Calibration User Code
[00000 to 19999]
If an incorrect value is entered, access to the calibration page is inhibited and the display returns to the top of the oxygen calibration page.

One Point Calibration
Select one-point calibration sequence.

Connect to Air
Connect the air supply to the probe (refer to the probe's installation and operating instructions, *IM/ZGP2*). The upper display indicates the measured % oxygen.

Calibrating Air
The upper display indicates the measured % oxygen. When a stable reading is detected the display advances automatically to the next frame. To abort calibration, press either the [ ] or [ ] switch.

Calibration Pass/Fail
On completion a calibration status message is displayed:

`Calibration Pass`:	Calibration sequence successful
`Failed Constant`:	Cell offset >±10mV (upper display shows cell mV output)
`Failed Unstable`:	Cell output unstable (drifting).

Note. If the sensor calibration is unsuccessful then the 'Cell Zero mV' and 'Span % of Theory' parameters are unaffacted. The instrument continues to operate using parameters stored during the last successful calibration.

Press [ ] to return to the top of the **Oxygen Calibration Page.**

Press [ ] to advance to the **Secure Parameters Page.**

7.2 Two-point Calibration

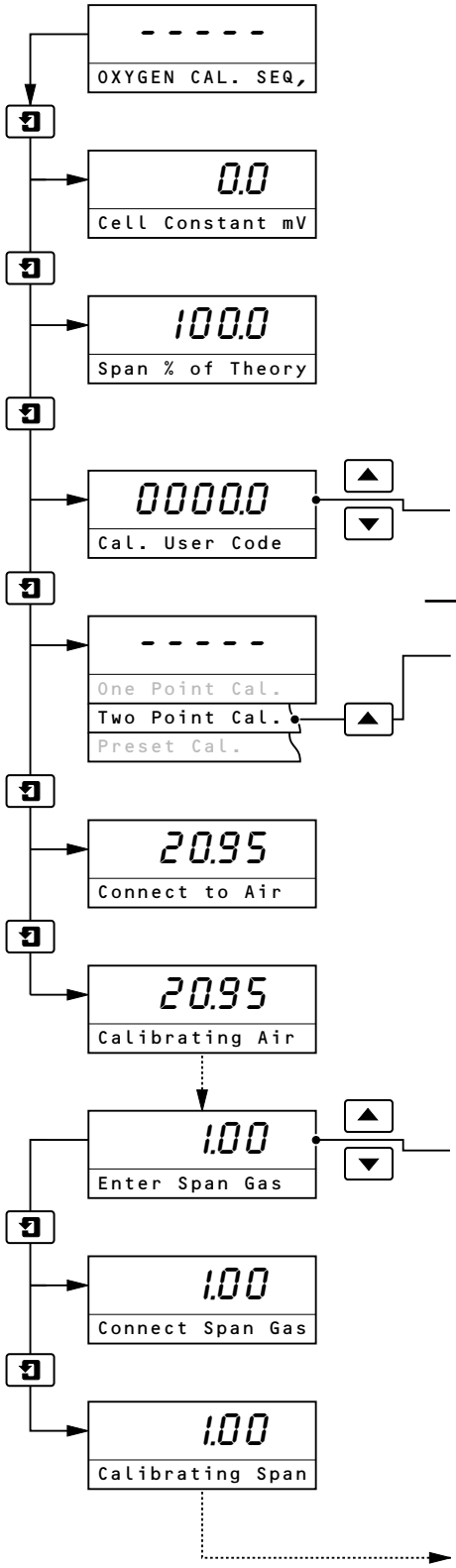

Oxygen Calibration Sequence

Cell Zero mV
The upper display shows the millivolt offset of the oxygen probe from the last successful calibration.

Span % of Theory
A value between 90 and 110% should be displayed. The display indicates the oxygen probe output slope using parameters derived at the last successfull two-point calibration or the preset values.

Calibration User Code
[00000 to 19999]
If an incorrect value is entered, access to the calibration page is inhibited and the display returns to the top of the oxygen calibration page.

Two Point Calibration
Select the two-point calibration sequence.

Connect to Air
Connect the air supply to the probe (refer to the installation and operating instructions supplied with the probe). The upper display indicates the test gas value in % oxygen.

Calibrating Air
The upper display indicates measured % oxygen. The display advances automatically to the next frame when a stable reading is detected. To abort calibration, press either the ⏎ or ⏎ switch to advance to the next frame.

Enter Span Gas
[between 0.10 and 10.00% O_2]
Set the oxygen content of the gas used to calibrate the span.

Connect Span Gas
Connect the span gas to the probe (refer to the probe's installation and operating instructions, *IM/ZGP2*). The upper display indicates the test gas value in % oxygen.

Calibrating Span
The upper display indicates measured % oxygen. The display advances automatically to the next frame when a stable reading is detected. To abort calibration, press either the ⏎ or ⏎ switch to advance to the next frame.

Continued on next page

…7.2 Two-point Calibration

Continued from previous page

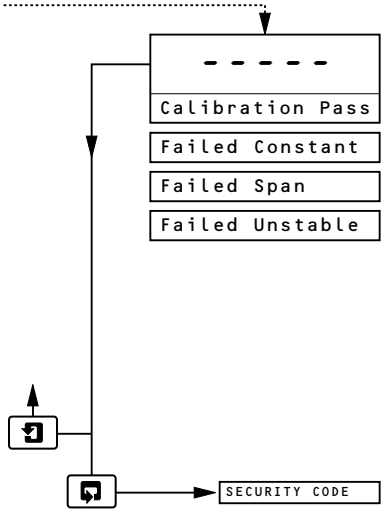

Calibration Pass/Fail

On completion a calibration status message is displayed.

`Calibration Pass`:	Calibration sequence successful
`Failed Constant`:	Cell offset >±10mV (upper display shows cell constant)
`Failed Span %`:	Cell output <90% or >110% of slope (upper display shows measured slope)
`Failed Unstable`:	Cell output unstable (drifting).

Note. If sensor calibration is unsuccessful then the 'Cell Zero mV' and 'Span % of Theory' parameters are unaffected. The instrument continues to operate using parameters stored during the last successful calibration.

Press ⏎ to return to the top of the **Oxygen Calibration Page.**

Press ⏎ to advance to the **Secure Parameters Page.**

7.3 Preset Calibration

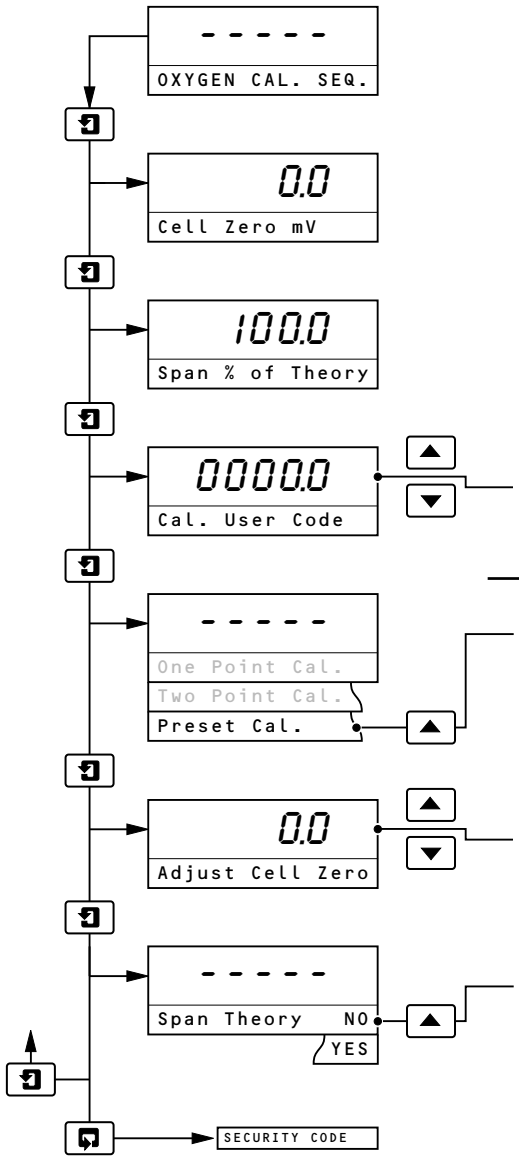

Oxygen Calibration Sequence

Cell Zero mV
The upper display shows the millivolt offset of the oxygen probe from the last successful calibration.

Span % of Theory
A value between 90 and 110% should be displayed. If the value is outside these limits then the oxygen probe must be checked.

Calibration User Code
Enter the required code number between 00000 and 19999, to gain access to the calibration page. If an incorrect value is entered, access to the calibration page is inhibited.

Preset Calibration
Select the preset calibration sequence.

Adjust Cell Zero
[0 to ±10mV]
The upper display shows the cell output (in mV) corresponding to a reading of 20.95 %O_2. Adjust the reading to correspond with the probe.

Span Theory
Select 'YES' if the 'Span % of Theory' parameter is to be reset to 100%. Select 'NO' to retain the existing value.

Press to return to the top of the **Oxygen Calibration Page.**

Press to advance to the **Secure Parameters Page.**

7.4 Access to Secure Parameters

A 5-digit security code is used to prevent tampering with the secure parameters.

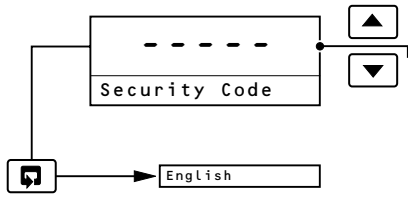

Security Code
[00000 to 199999]
If an incorrect value is entered, access to programming pages is inhibited.

Press ⏎ to advance to the **Language Selection Page**.

7.5 Language Selection Page

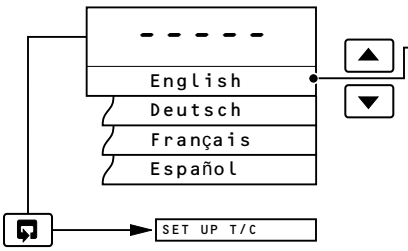

Language Selection
Select the language in which all text is subsequently displayed:
- English,
- German,
- French,
- Spanish.

Press ⏎ to advance to the **Set Up Thermocouple Page**.

7.6 Set Up Thermocouple Page

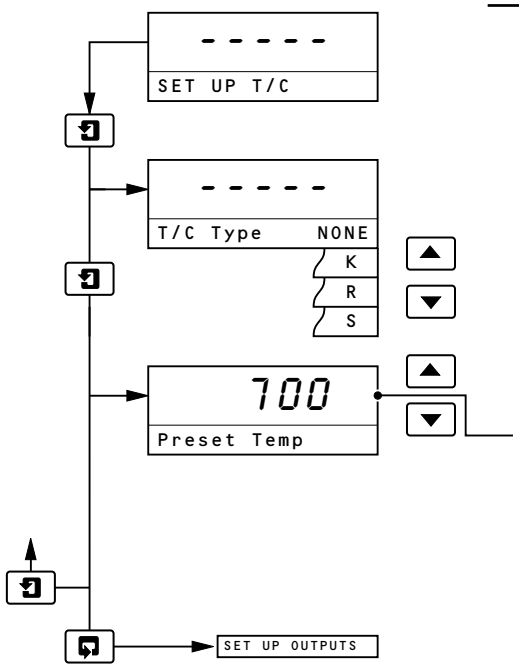

Set Up Thermocouple
Page header

Thermocouple Type
Set the thermocouple type required: Type K, R, S or NONE. If thermocouple type is set to 'NONE', a preset temperature must be used – see below.

Preset Temperature
If a thermocouple is not used, set the process temperature.
[600 to 1400°C in 1°C steps]

Note. This frame is not displayed unless **Thermocouple Type** is set to 'NONE'.

Press to return to the top of the **Oxygen Calibration Page.**

Press to advance to the **Set Up Outputs Page.**

7.7 Set Up Outputs Page

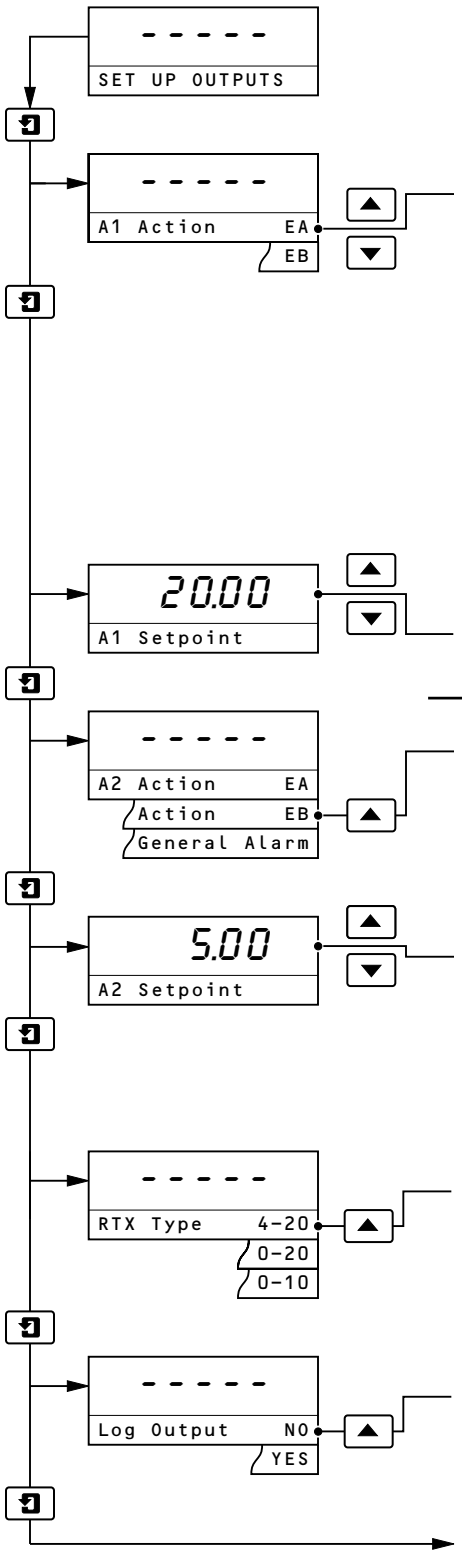

Set Up Outputs
Page header

Alarm A1 Action
Set the required alarm action from the following table:

Alarm Action	LED Action		Relay Action	
	Input Above Set Point	Input Below Set Point	Input Above Set Point	Input Below Set Point
EB	ON	OFF	DE-ENERGISED	ENERGISED
EA	OFF	ON	ENERGISED	DE-ENERGISED

The set point band is defined as the actual value of the set point plus or minus the hysteresis value. The hysteresis value is fixed at 0.1% of set point. Alarm action occurs if the input value is above or below the set point band. If the input moves within the set point band the last alarm action is maintained.

Alarm 1 Set Point
The alarm set point can be set to any value within the oxygen range. [0.00% to 25.00%]

Alarm A2 Action
Set the required alarm action from the above table.
If the alarm action is set to 'General Alarm', the relay is de-energized and the associated front panel l.e.d. is illuminated when one or more of the following conditions is true: thermocouple open circuit; cell warming up; calibration fail, cell stability check, power failure.

Alarm A2 Set Point
The alarm set point can be set to any value within the oxygen range of 0.3% to 25.0%.

Note. This frame is not displayed if the 'Alarm 2 Action' parameter has been set to 'General Alarm'.

Retransmission Type
The retransmission output is assigned to the oxygen range.
Select the retransmission output current range required (4 to 20mA, 0 to 20mA or 0 to 10mA).

Logarithmic or Linear Output
The retransmission can be assigned to give a logarithmic or linear output.
Select the output required:
YES – Logarithmic
NO – Linear

Continued on next page

…7.7 Set Up Outputs Page

Continued from previous page

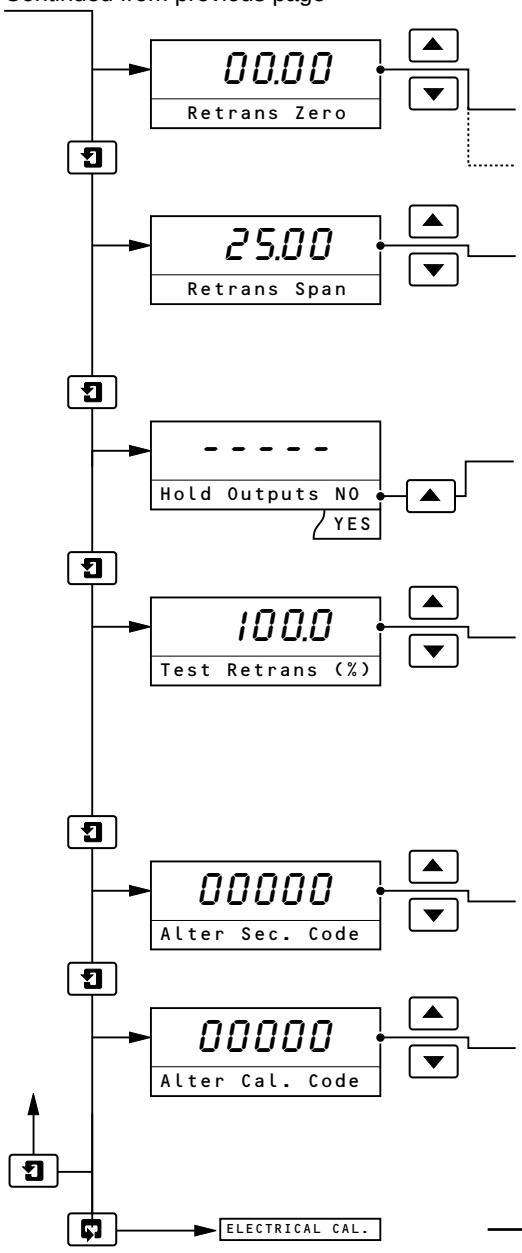

Retransmission Zero
Set the required retransmission zero value, in % oxygen units.
[0% to 20.00% (linear output)]
or
[0.01% to 0.25% (logarithmic output)].

Retransmission Span
Linear Output – Set the required retransmission span value, in % oxygen units.
[5% to 25.00%]
Logarithmic Output – The retransmission span is preset to two decades above the zero value and cannot be adjusted. For example, if the zero is set to 0.2%, the span is preset to 20.00% .

Hold Outputs
The retransmission and alarm outputs can be held to prevent inadvertent operation during a test gas calibration sequence.

Test Retransmission
The instrument transmits a test signal of 0, 25, 50, 75 and 100% of the retransmission range selected above. The % test signal selected is shown on the upper display.

Example: When the Retransmission Current Range is set to '0–20' (mA) and the Test Retransmission signal is set to '50%', the retransmission output value is forced to 10mA.

Alter Security Code
[00000 to 199999]
Set the security code used to gain access to secure parameters – see Section 7.4.

Alter Calibration Code
[00000 and 199999]
Set the code used to gain access to the oxygen calibration facility – see Sections 7.1 to 7.3.

Press to return to the top of the **Set Up Outputs Page.**

Press to advance to the **Electrical Calibration Page.**

APPENDIX A – ELECTRICAL CALIBRATION

Note. Electrical calibration is carried out prior to despatch and further calibration should never be necessary. However, if inaccurate or inconsistent readings are obtained, follow the procedures detailed in this Section.

A.1 Equipment Required

a) Millivolt source (cell input simulator), –20.0 to 180.0mV.

b) Millivolt source (temperature input simulator), 10.0 to 40.0mV.

c) Digital voltmeter (current output), 0 to 20mA.

d) Thermometer, to measure ambient temperature.

A.2 Preparation

a) Switch off the mains supply. Disconnect the probe and retransmission output terminations from the instrument – see Fig. 4.2.

b) Connect the millivolt sources and the milliammeter to the appropriate terminals – see Fig. A.1.

c) With both front panel covers in place, switch on the mains supply to the instrument and allow ten minutes for the circuits to stabilize.

d) Select the **Electrical Calibration Page** and proceed as detailed in Section A.3, following.

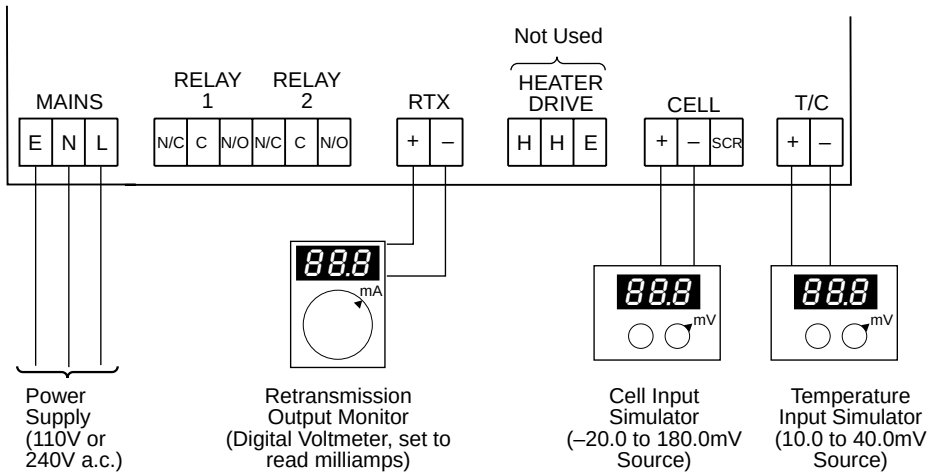

Fig. A.1 Electrical Connections – Calibration

A.3 Electrical Calibration Page

In this section the actual values denoted by ‘x x x x x ‘ are unimportant and are used to determine display reading stability, when carrying out the electrical calibration procedure.

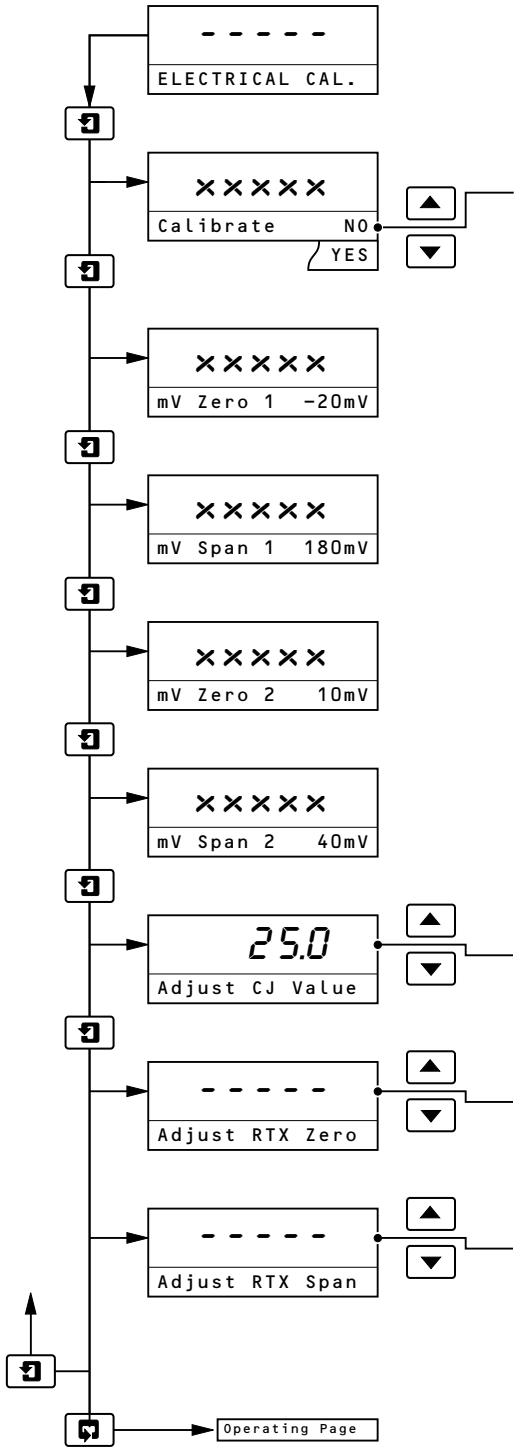

Electrical Calibration Page
(To access this page see Fig. 7.1)

Calibrate
Select 'YES' to access the electrical calibration sequence. Select 'NO' to advance to the **Adjust RTX Zero** parameter.

mV Zero 1
Set the Cell simulator millivolt source to –20mV and allow the display to stabilize.

mV Span 1
Set the Cell simulator millivolt source to 180mV and allow the display to stabilize.

mV Zero 2
Set the Temperature simulator millivolt source to 10mV and allow the display to stabilize.

mV Span 2
Set the Temperature simulator millivolt source to 40mV and allow the display to stabilize.

Adjust Cold Junction Value
Measure the ambient temperature and set the display to the measured value, in °C.

Adjust RTX Zero
Adjust the display until the milliammeter reads the minimum retransmission level. i.e. 4mA.

Adjust RTX Span
Adjust the display until the milliammeter reads the maximum retransmission level. i.e. 20mA.

Press ⊡ to return to the top of the **Electrical Calibration Page.**

Press ⊡ to advance to the **Operating Page.**

INDEX

PRODUCTS & CUSTOMER SUPPORT

Products

Automation Systems

- ***for the following industries:***
  - Chemical & Pharmaceutical
  - Food & Beverage
  - Manufacturing
  - Metals and Minerals
  - Oil, Gas & Petrochemical
  - Pulp and Paper

Drives and Motors

- ***AC and DC Drives, AC and DC Machines, AC Motors to 1kV***
- ***Drive Systems***
- ***Force Measurement***
- ***Servo Drives***

Controllers & Recorders

- ***Single and Multi-loop Controllers***
- ***Circular Chart and Strip Chart Recorders***
- ***Paperless Recorders***
- ***Process Indicators***

Flexible Automation

- ***Industrial Robots and Robot Systems***

Flow Measurement

- ***Electromagnetic Flowmeters***
- ***Mass Flow Meters***
- ***Turbine Flowmeters***
- ***Flow Elements***

Marine Systems & Turbochargers

- ***Electrical Systems***
- ***Marine Equipment***
- ***Offshore Retrofit and Refurbishment***

Process Analytics

- ***Process Gas Analysis***
- ***Systems Integration***

Transmitters

- ***Pressure***
- ***Temperature***
- ***Level***
- ***Interface Modules***

Valves, Actuators and Positioners

- ***Control Valves***
- ***Actuators***
- ***Positioners***

Water, Gas & Industrial Analytics Instrumentation

- ***pH, Conductivity and Dissolved Oxygen Transmitters and Sensors***
- ***Ammonia, Nitrate, Phosphate, Silica, Sodium, Chloride, Fluoride, Dissolved Oxygen and Hydrazine Analyzers***
- ***Zirconia Oxygen Analyzers, Katharometers, Hydrogen Purity and Purge-gas Monitors, Thermal Conductivity***

Customer Support

We provide a comprehensive after sales service via a Worldwide Service Organization. Contact one of the following offices for details on your nearest Service and Repair Centre.

United Kingdom

ABB Limited
Tel: +44 (0)1453 826661
Fax: +44 (0)1453 829671

United States of America

ABB Inc.
Tel: +1 775 850 4800
Fax: +1 775 850 4808

Client Warranty

Prior to installation, the equipment referred to in this manual must be stored in a clean, dry environment, in accordance with the Company's published specification.

Periodic checks must be made on the equipment's condition. In the event of a failure under warranty, the following documentation must be provided as substantiation:

1. A listing evidencing process operation and alarm logs at time of failure.
2. Copies of all storage, installation, operating and maintenance records relating to the alleged faulty unit.

ABB has Sales & Customer Support
expertise in over 100 countries worldwide

www.abb.com

The Company's policy is one of continuous product improvement and the right is reserved to modify the information contained herein without notice.

Printed in UK (10.05)

IM/ZDT/GP Issue 5

ABB Limted
Oldends Lane, Stonehouse
Gloucestershire
GL10 3TA
UK
Tel: +44 (0)1453 826661
Fax: +44 (0)1453 829671

ABB Inc.
Analytical Instruments
9716 S. Virginia St., Ste. E
Reno, Nevada 89521
USA
Tel: +1 775 850 4800
Fax: +1 775 850 4808