01-12-06 Valid without signature

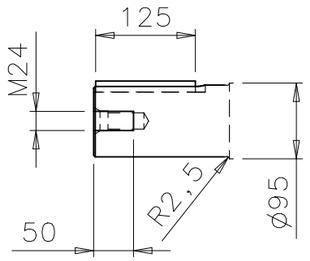

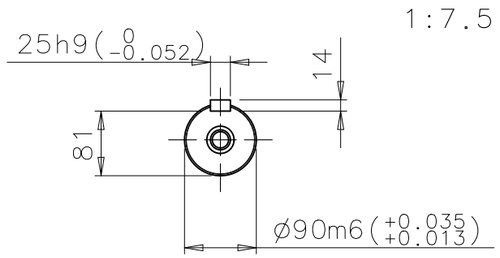

1	D-BEARING 6319/C3
2	N-BEARING 6316/C3
3	TERMINAL BOX FOR CONTROL CABLE ø10-14, 2xM20x1.5
4	SPM NIPPLE DE AND NDE
5	PT-1000 FOR BEARINGS (OPTIONAL)
6	MAIN TERMINAL BOX
7	FREE DISTANCE FOR COOLING
8	TERMINAL BOX FOR HEATING ELEMENT CABLE ø10-14, 1xM20x1.5 (OPTIONAL)
9	EARTHING, M12, FOR M3GM MAX 150mm^2

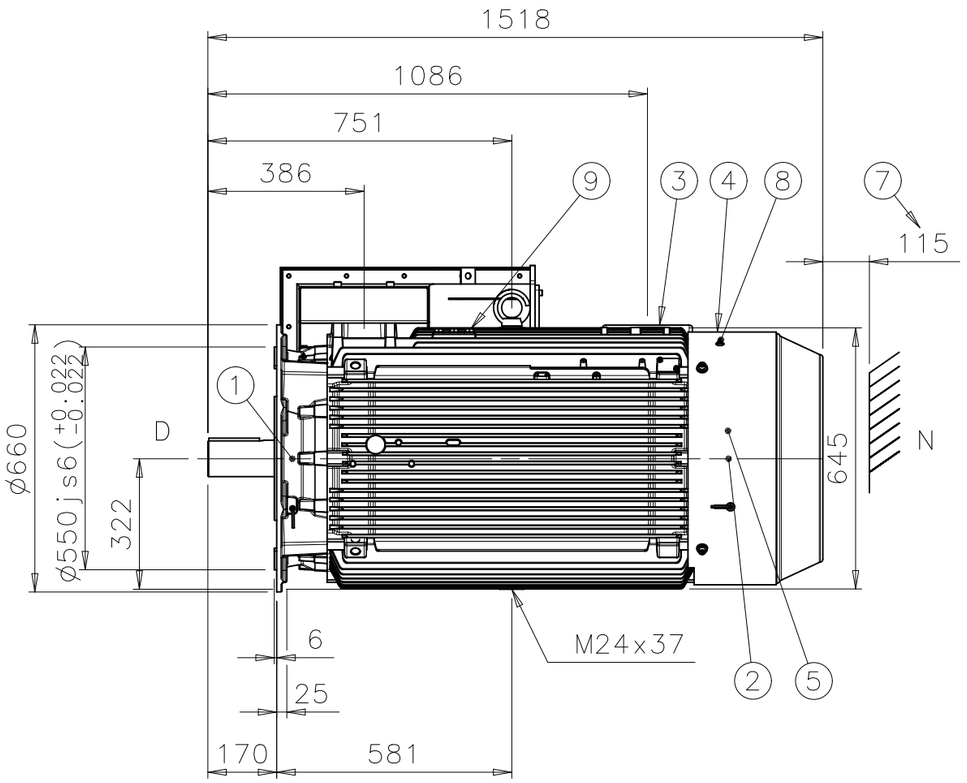

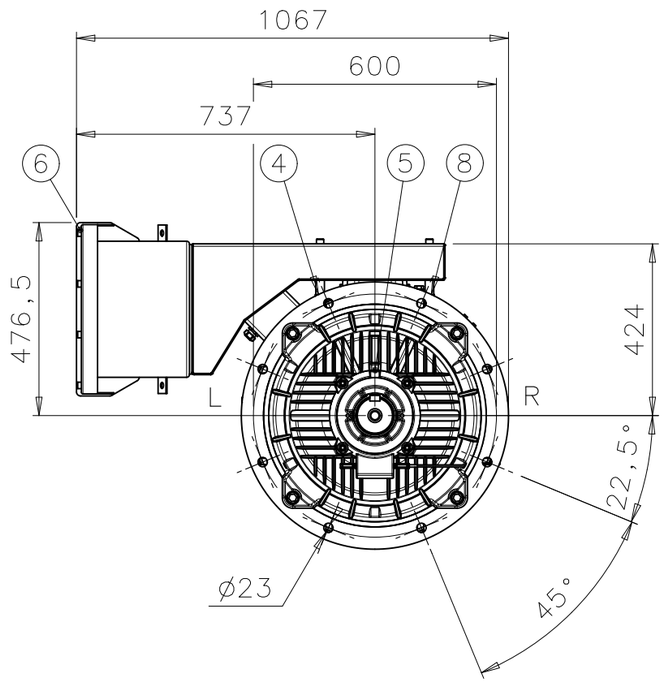

THE CUSTOMER IS RESPONSIBLE FOR THE DESIGN AND CONSTRUCTION OF THE FOUNDATION.
IT SHALL BE SUFFICIENTLY RIGID TO WITHSTAND SHORT CIRCUIT FORCES. TO AVOID RESONANCE VIBRATIONS THE FOUNDATION SHALL BE DESIGNED SO THAT THE NATURAL FREQUENCY (REED FREQUENCY) OF FOUNDATION TOGETHER WITH MACHINE IS NOT WITHIN ±20% OF RUNNING SPEED FREQUENCY.
THE CUSTOMER IS ALSO RESPONSIBLE FOR LATERAL AND TORSIONAL CRITICAL SPEED ANALYSIS OF THE COMPLETE INSTALLATION.

We reserve all rights in this document and in the information contained therein. Reproduction, use or disclosure to third parties without express authority is strictly forbidden.
© ABB Oy, Machines, Helsinki

General tolerances ISO 2768-mK
Threads according to ISO 965 toleranceclass 6H
Symbols for roughness acc. to ISO 1302

Rev	Change	Date	Prep.	Approved

Prepared 2006-10-20 A. KIVIJÄRVI	Responsible dept. ATAP/PID	Title DIMENSION PRINT SQUIRREL CAGE MOTOR	Scale 1:15
Approved 2006-10-20 O. LAHTINEN	Take over dept.		
Material		Code 13 BM 315 A / 315	Language en
Supersedes	Superseded by	Type M3BM/GM 315LK4-12 B5	Size A3
ABB Oy, Machines, Helsinki		Document No. 3GZF500031-635 Revision A	Sheet 1/1