Operator's manual

REB 551-C3*2.3

Breaker protection terminal with automatic reclosing and synchrocheck

About this manual:

DocID: 1MRK 505 021-UEN
Issue date: January 2001
Status: New
Revision: 00

Manufacturer:

ABB Automation Products AB
Substation Automation Division
SE-721 59 Västerås
Sweden
Tel: +46 (0) 21 34 20 00
Fax: +46 (0) 21 14 69 18
Internet: http://www.abb.se

Contents

Contents

Chapter 1 Introduction

About this chapter

This chapter introduces you to the operator’s manual, it’s purpose and usage.

1 Introduction to the operator’s manual

1.1 About this manual

Use the operator’s manual to view instructions concerning how to perform common tasks during normal service.

The operator’s manual contains the following important chapters:

- The *safety information* chapter reviews warnings and notes in the manual of which you should be alert.
- The *human machine interface* chapter describes the local human-machine interface (HMI).
- The *disturbance* chapter describes how to retrieve disturbance information and reset alarms.
- The *protection system status* chapter describes how to read service values, function values and output signals
- The *terminal unit status* chapter describes how to get information about the terminal status.

The manual does not contain any instructions for commissioning or testing.

1.2 Intended audience

1.2.1 General

The operator’s manual addresses the *operator*, who operates the terminal on a daily basis.

1.2.2 Requirements

The operator must be trained and possess a basic knowledge in how to operate protection equipment. The manual contains terms and expressions commonly used to describe this kind of equipment.

Documents related to REB 551-C3*2.3	Identity number
Operator’s manual	1MRK 505 021-UEN
Installation and commissioning manual	1MRK 505 023-UEN

Documents related to REB 551-C3*2.3	**Identity number**
Technical reference manual	1MRK 505 022-UEN
Application manual	1MRK 505 090-UEN
Technical overview brochure	1MRK 505 020-BEN

1.3 Revisions

Revision	**Description**
2.3-00	First revision

Chapter 2 Safety information

About this chapter

This chapter lists warnings and cautions that must be followed when handling the terminal.

1 Warnings

Warning!

Do not touch circuitry during operation. Potentially lethal voltages and currents are present.

Warning!

Always connect the terminal to protective ground, regardless of the operating conditions. This also applies to special occasions such as bench testing, demonstrations and off-site configuration. Operating the terminal without proper grounding may damage both terminal and measuring circuitry, and may cause injuries in case of an accident.

Warning!

Never unmount the front or back cover from a powered terminal or from a terminal connected to powered circuitry. Potentially lethal voltages and currents are present.

Warning!

Always avoid to touch the circuitry when the cover is removed. The product contains electronic circuitries which can be damaged if exposed to static electricity (ESD). The electronic circuitries also contain high voltage which is lethal to humans.

Chapter 3 Overview

About this chapter

This chapter describes operations an operator may perform on a daily basis or when the need arises.

1 Operator overview

If a disturbance occurs the operator must document it and the fault that caused the disturbance has to be evaluated and documented for future reference. The operator must identify the disturbance and, for example, document the fault currents and voltages at the time of the fault. The operator is also responsible for retrieving data about the protected network, which will give further information when investigating a fault. This implies viewing the mean current, voltage, power and frequency or primary and secondary measured phasors. The operator is able to check the terminal status at any time.

In some cases the operator is responsible for changing the way the terminal operates. This could be changing the active setting group or a setting parameter value. This must be done in strict accordance with the company regulations due to that a none authorized change can cause severe damage to the protected object.

Chapter 4 Understand the human-machine interface

About this chapter

This chapter describes how the human-machine interface works from an operator's view.

1 Human Machine Interface Overview

1.1 Application

The human machine interface is used to monitor and in certain aspects affect the way the product operates. The configuration designer can add functions for alerting in case of important events that needs special attention from you as an operator.

1.2 Design

The human-machine interface consists of:

- the human-machine interface (HMI) module.
- the LED module.

Figure 1: The figure shows the LED (upper) and the HMI (lower).

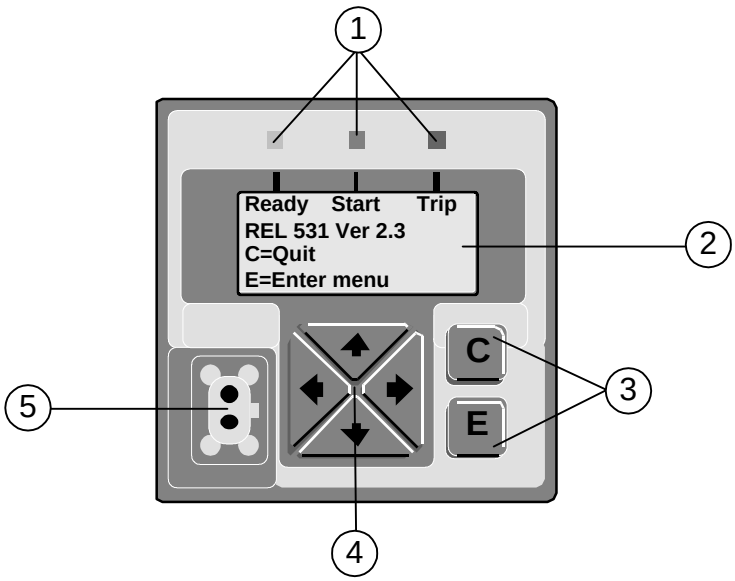

1. Status indication LEDs
2. LCD display
3. **Cancel** and **Enter** buttons
4. Navigation buttons
5. Optical connector

Figure 2: The HMI module

The number of buttons used on the HMI module is reduced to a minimum to allow a communication as simple as possible for the user. The buttons normally have more than one function, depending on actual dialogue.

Pressing any button in idle mode will activate the HMI display.

The C button has three main functions:

- **Cancel** any operation in a dialogue window.
- **Exit** the present level in the menu tree. This means, it cancels the present function or the present menu selection and moves one step higher (back) in the menu tree.
- **Clear** the LEDs when the start window is displayed.
- Bring the HMI display into idle mode if pressed when the idle window is displayed (**Quit** function).

The E button mainly provides an **Enter**/**Execute** function. It activates, for example, the selected menu tree branch. Further it is used to confirm settings and to acknowledge different actions.

The left and right arrow buttons have three functions:

- Position the cursor in a horizontal direction, for instance, to move between digits in a number during the parameter setting.
- Move between leafs within the same menu branch.
- Move between the confirmation alternatives (yes, no and cancel) in a command window.

The up and down arrow buttons have three functions:

- Move between selectable branches of the menu tree. This function also scrolls the menu tree when it contains more branches than shown on the display.
- Move between the confirmation alternatives in a command window.
- Change parameter values in a data window

The LED indication module is equipped with 18 LEDs, which can light or flash in either red, yellow or green color. A description text can be added for each of the LEDs.

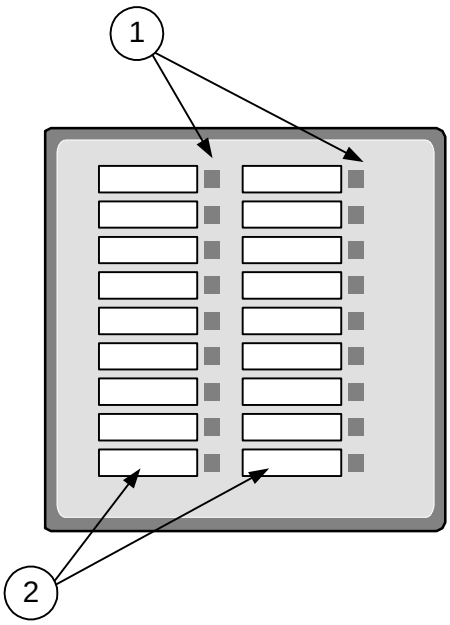

xx00000406.vsd

1	Three-color LEDs
2	Descriptive label, user exchangeable

Figure 3: The LED module

1.3 Functionality

The HMI module is a *bidirectional means of communicating.* This means that:

- events may occur that activates for instance a LED, in purpose to draw your attention to something that has occured and needs some sort of action.
- you as the operator may of own interest view a certain data.

Use *menus* to navigate through menu *commands* and to locate the data of interest.

The LED module is a *unidirectional means of communicating*. This means that events may occur that activates a LED, in purpose to draw your attention to something that has occured and needs some sort of action.

2 HMI module LED indications

The LEDs above the LCD indicates the terminal's status.

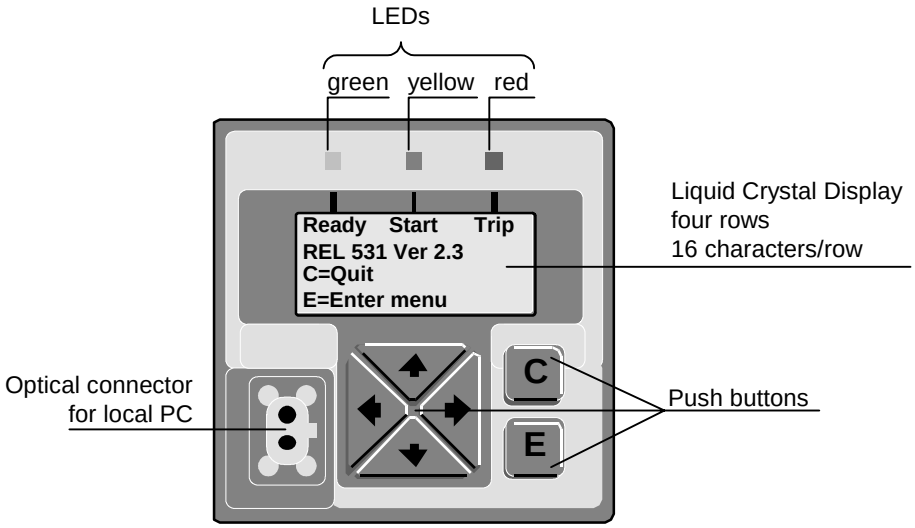

Figure 4: The LED indication module

Table 1: LED indications

Display	Means
Off (no LED is lit)	No power or defect terminal.
Steady green LED	The terminal is ready for operation.
Flashing green LED	Internal failure, startup is in progress
Flashing yellow LED	Terminal in test mode.
Steady yellow LED	Disturbance report trigged.
Steady red LED	A binary signal, normally a TRIP command, has been activated. Which binary signal(s) that are supposed to activate the red LED is defined in the disturbance report.
Flashing red LED	Terminal blocked or in configuration mode.

Chapter 5 Understand the HMI tree

About this chapter

This chapter describes the different Menu trees.

1 Overview

This chapter presents the main layout of the menu tree for the local human-machine interface (HMI). The menu tree includes menus for:

- Disturbance report
- Service report
- Settings
- Terminal report
- Configuration
- Command
- Test

Use SMS or SCS to activate or deactivate menus on the local human-machine interface (HMI).

Note!

It is possible to completely turn off parts of the menu tree!

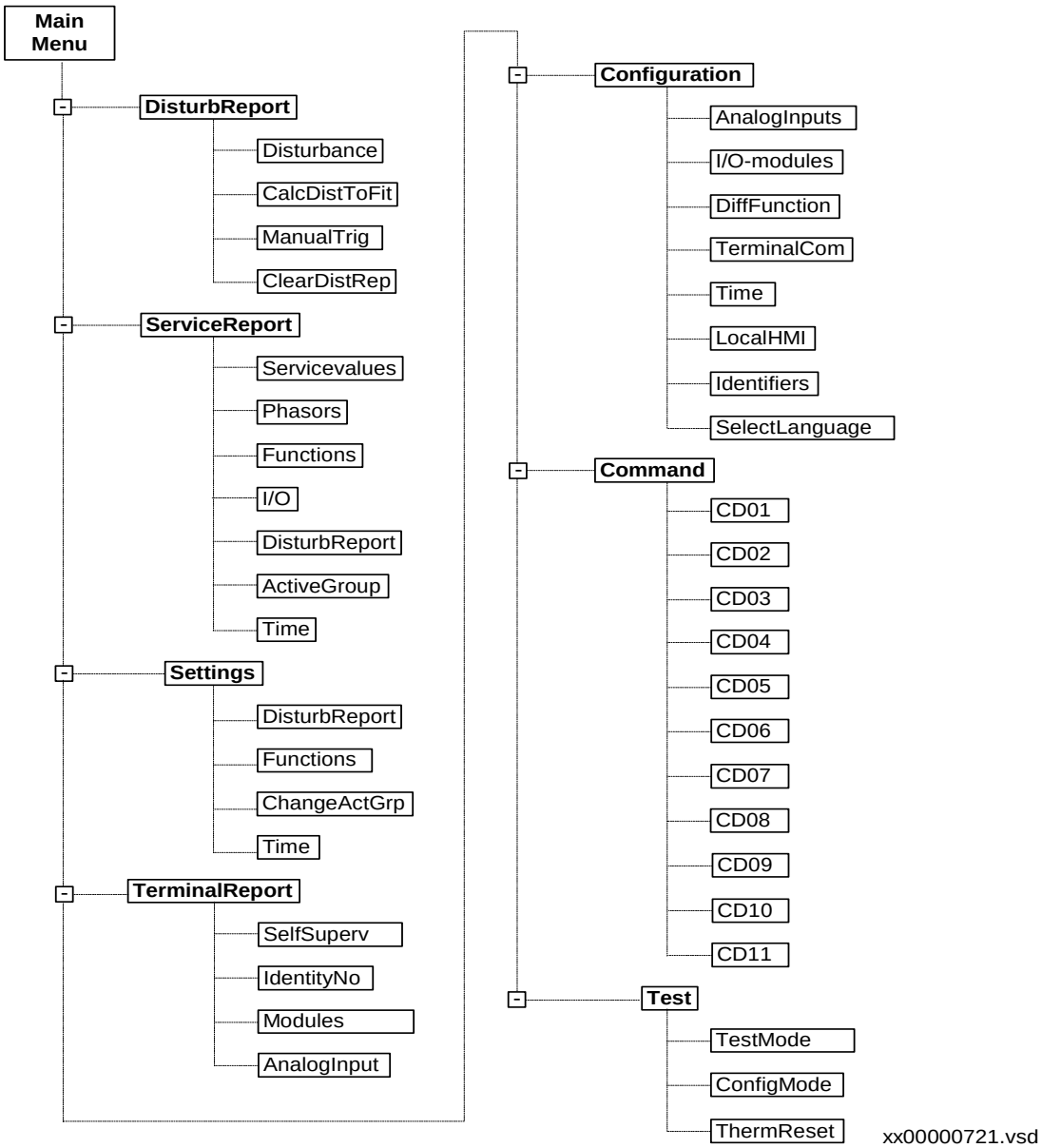

Figure 5: Menu tree for REx 5xx.

2 DisturbReport

Use this menu to display the information recorded by the REx 5xx terminal for the 10 latest disturbances, these commands are available:

- Display information of a disturbance.
- Calculate the distance to fault.
- Manually trigger the disturbance reporting unit.
- Clear the disturbance report memory.

To view the complete disturbance report, including the result of the event recorder and the disturbance recorder, use a front-connected PC or the SMS or SCS.

2.1 Disturbance

A disturbance instance will show:

- **The time of disturbance**, which is defined as the local terminal date and time when the first triggering signal started the disturbance recording.
- **The trig signal**, which started the recording.
- **Indications**, activated during the recorded disturbance. Indications to be recorded are selected during the terminal configuration procedure.

The fault locator will also report:

- **Fault location**, provides information about the distance to the fault and the fault loop used for the calculation.
- **Trip values**, are displayed as phasors (RMS value and phase angle) of the currents and voltages, before and during the fault.

2.2 CalcDistToFlt

Possible to recalculate the distance to fault with a different fault loop or with different fault locator setting parameters. The recalculation is enabled since trip values are available for each disturbance that caused a phase-selective trip of the distance protection function.

2.3 ManualTrig

Using the manual trigger creates an instant disturbance report. Use this function to get a *snapshot* of the monitored line.

2.4 ClearDistRep

The disturbance report has a dedicated storage memory, sufficient enough to save the ten latest disturbances. The memory operates by the first-in – first-out principle (FIFO). This means that when the memory is full, the oldest recorded disturbance will be deleted from memory when a new disturbance occurs. After clearing, the entire disturbance memory will be empty.

3 ServiceReport

The Service report menu displays the operating conditions of the terminal as well as measured and calculated values and internal signal status.

3.1 ServiceValues

Presents the average values of measured current, voltage, active and reactive power and frequency. Available when the transformer module option is installed.

3.2 Phasors

Presents the primary and secondary phasors of measured currents and voltages.

3.3 Functions

Presents the presently measured values and other information of the different parameters for included functions.

3.4 I/O

Displays present logical values of all binary inputs and outputs of all installed I/O modules in the REx 5xx terminal.

3.5 DisturbReport

Provides information about the below listed items concerning the disturbance recording.

- Available free memory for further disturbance recording.
- The sequence number for the next possibly recorded disturbance (can be viewed or set).

The present status of analogue triggers that can start the disturbance recorder.

3.6 ActiveGroup

The present setting of active groups can be viewed here.

3.7 Time

The current internal time for the REx 5xx terminal can be viewed here. The time is displayed in the form YYYY-MMM-DD and hh:mm:ss. All values but the month are presented with digits. The month is presented with the first three letters in current month.

4 Settings

Use this menu to select and set the different parameters for included protection and control functions in the REx 5xx terminal. There are four selectable and editable settings group, each independent of the other, to structure desired functions and applications.

4.1 DisturbReport

This menu includes all setting parameters for the disturbance report. The following features are available:

- **Sequence number** can be set for each recorded disturbance.
- **Sampling rate** is fixed at 1000 Hz.
- **Recording times** for pre-fault, post-fault and time limit shall be set.
- **Fault locator settings** shall be done here. It includes measurement duration and presentation of the result.

4.2 Functions

Settings of the parameters for the included protection and control functions are done here. Four separate setting groups are avaible. First select desired group and then desired function. One group can contain one or several functions.

4.3 ChangeActGrp

Select and change the active group setting. Each of the four groups can be set independently of each other.

4.4 Time

To set the internal time in the REx 5xx terminal. The time is set in the form of YYYY-MMM-DD and hh:mm:ss. All values but the month are presented with digits. The month are presented with the first three letters in current month.

5 TerminalReport

Use this menu to display information of the self supervision, terminal identity, software version, modules and the analogue inputs.

5.1 SelfSuperv

The REx 5xx terminal has extensive built-in self-supervision functions to detect if internal faults occurs. If an error occurs, the green LED on the front panel will flash and a warning signal will be activated. Use the self-supervision report to get information about detected faults.

The self-supervision report can also be used to check the status of each installed module as well as CPU, memory and clock operation.

5.2 IdentityNo

The terminal identity feature contains information as serial number and the software version installed in the terminal.

5.3 Modules

This menu includes information about all included modules, such as I/O-modules and MPM-module (CPU).

5.4 AnalogInput

Includes information about the analogue inputs, voltage and current, concerning nominal and rated values.

6 Configuration

Use this menu to make a general configuration of the REx 5xx terminal. The CAP 531 configuration tool must be used to configure protection and control functions and the I/O modules.

6.1 AnalogInput

Use this menu to configure general analogue input settings, such as:

- general data about the power network, such as rated voltage, current, frequency and the position of the earthing point.
- CT and VT ratio.
- user-defined labels for the analogue inputs and for the measured voltage, current, active and reactive power and frequency.

6.2 I/O-modules

In this menu it is possible to:

- reconfigure added or replaced I/O modules.
- set the level for blocking of oscillating binary inputs.

6.3 DiffFunction

Use this menu to configure the differential protection functions as a part of networked terminal system. Possible to change:

- the differential synchronisation scheme
- the master terminal identity
- the remote (slave) terminal identity.

6.4 TerminalCom

Use this menu to configure the REx 5xx terminal communication buses, if any connected.

6.4.1 SPA communication

Use this menu to set the parameters for the front and rear ports used for SPA communication. Each communication channel must be set separately.

Slave number and baud rate (communication speed) must be set for both the ports. These settings must correspond with the settings in the used PC-program. For the rear port it is possible to set permission of changes between active setting groups, ActGrpRestrict, and the setting restrictions, SettingRestrict, as well.

6.4.2 IEC communication

Use this menu to set slave number and baud rate when to communicate on the IEC 870–5–103 communications bus, also known as *Schnittstelle 6* or VDEW 6. The IEC bus uses the same rear optic port as the SPA bus, but the settings must be done separately.

6.4.3 LON communication

Use this menu to view node information as address and location, (set from the LON Network Tool), as well as the Neuron identity. Functions for address setting during installation (ServicePinMSG), LON configuration reset (LONDefault) and session timers are also available.

Note!

Session timers are for advanced usage and should only be changed upon recommendation from ABB Automation Products AB.

6.4.4 Remote terminal communication

Use this menu to configure the digital communication to remote terminal. This communication requires a certain digital communication module. The parameters to set are:

- the bit rate
- the fiber optics transmitter output power
- the terminal master/slave operation.

6.5 Time

The internal terminal time can be synchronised with an external unit connected to the SPA/IEC 870-5-103 port or the LON port. It is also possible to use a minute pulse synchronisation signal connected to a digital input.

6.6 DisturbReport

This menu includes all setting parameters for the disturbance report. The following feature is available:

- Clear the LEDs.

6.7 LocalHMI

Use this menu to to block the possibility to change settings via remote communication.

6.8 Identifiers

Use the identifiers to define and specify the location of and to define a terminal within the power system. All identifier names are typed as strings, maximum 16 characters, and the identity numbers are typed with digits. Typical usage are:

- name and number of the station.
- name and number of the bay or object.
- name and number of the actual REx 5xx terminal.

7 Command menu

Use this menu to manually select and execute any single or multiple signal command, as defined from the configuration menu or the CAP 531 configuration tool. The signal(s) can be connected to any internal function or to a binary output of the terminal. It is possible to assign a user-defined name to these binary signals.

8 Test menu

Use this menu to enable easier secondary injection tests of the REx 5xx terminal. It is possible to block functions to prevent trip of circuit breakers and activation of alarm signals etc. to the control room during the testing activities.

The selectable modes, from the HMI, is the TestMode and ConfigMode.

TestMode:

- Setting the terminal in test mode operation
- Blocking of one or several protection and control functions (selectable) during test operation.
- Blocking of one or several event functions (selectable) during test operation.
- Setting the disturbance report and the disturbance summary to On or Off during test operation.
- Special test mode to facilitate the testing of the line differential protection function. This Diff. TestMode disables the trip-out from the remote terminal and enables test from one end.

ConfigMode:

- Setting the terminal in configuration mode operation. This will automatically be done when down-loading a configuration from the CAP 531 configuration tool. When the down-loading is completed, the terminal automatically enters the normal mode.

Chapter 6 Handle the disturbances

About this chapter

This chapter describes how to handle disturbances.

1 Identify a disturbance

1.1 View the disturbance summary

View the disturbance summary when a disturbance occurrence is indicated by the lit yellow LED of the HMI module.

The disturbance summary is automatically displayed and scrolled on the display. No manual intervention is necessary.

1.2 The disturbance summary

The disturbance summary lists data about the two most recent disturbances:

- The date and time of occurrence.
- The indications list.
- The fault loop and distance to fault.

The summaries of the two most recent disturbances are automatically scrolled on the display in the following manner:

1. The most recent disturbance is summarized. The heading DistSummary1 is displayed. The heading remains on the second display row while related data are displayed.
2. The date and time the disturbance occurred are displayed.
3. The indications list is automatically scrolled signal by signal.
4. The fault loop and distance to fault are displayed.
5. The second most recent sequence disturbance is summarized according to steps 2-4 above. The heading DistSummary2 is displayed. The heading remains on the second display row while related data are displayed.
6. The most recent disturbance summary is repeated.
7. The second most recent disturbance summary is repeated.

2 View the disturbance indications

2.1 Navigate the menus

1. **Only one disturbance can be viewed at the time. Select the one to be viewed.**
2. **View the indications list.**

   Navigate the menus to:

   DisturbReport
   - **Disturbances**
     - **Disturbance*n***
       - **Indications**

   n is the disturbance order of occurrence, *n*=1 meaning the most recent and *n*=10 the least.

3. **Scroll through the available signal indications.**

   Signals activated during the fault time of the disturbance recording are listed.

3 View the prefault and fault voltages and currents

3.1 Navigate the menus

This procedure describes how to navigate the menus to view prefault and fault analog values.

View prefault values

1. **Only one disturbance can be viewed at the time. Select the one to be viewed.**
2. **View prefault values.**

   Navigate the menus to:

   DisturbReport
   - **Disturbances**
     - **Disturbance*n***
       - **TripValues**
         - **PreFault**

   n is the disturbance order of occurrence, *n*=1 meaning the most recent and *n*=10 the least.

3. **Scroll through the available voltages and currents.**

   Use the **Left** and/or **Right** arrow buttons to scroll between values.

Viewing fault current

1. **Only one disturbance can be viewed at the time. Select the one to be viewed.**
2. **View fault current.**

   Navigate the menus to:

   DisturbReport
   - **Disturbances**
     - **Disturbance*n***
       - **TripValues**
         - **Fault**

   n is the disturbance order of occurrence, *n*=1 meaning the most recent and *n*=10 the least.

3. **Scroll through the available voltages and currents.**

   Use the **Left** and/or **Right** arrow buttons to scroll between values.

4 View disturbance trigger levels

4.1 Navigate the menus

This procedure describes how to view the disturbance trigger levels.

1. **View the list of trigger levels.**

   Navigate the menus to:

   ServiceReport
   DisturbReport
   AnalogTrigStat

2. **Scroll the list.**

   Use the **Left** and **Right** arrow buttons to scroll the list of trigger levels.

Table 2: Disturbance triggering levels

Viewed data (default labels used, data is example values)	Description of trigger
U1>	Overvoltage trigger level in voltage input U1
U1<	Undervoltage trigger level in voltage input U1
U2>	Overvoltage trigger level in voltage input U2
U2<	Undervoltage trigger level in voltage input U2
U3>	Overvoltage trigger level in voltage input U3
U3<	Undervoltage trigger level in voltage input U3
U4>	Overvoltage trigger level in voltage input U4
U4<	Undervoltage trigger level in voltage input U4
U5>	Overvoltage trigger level in voltage input U5
U5<	Undervoltage trigger level in voltage input U5
I1>	Overcurrent trigger level in voltage input I1
I1<	Undercurrent trigger level in voltage input I1
I2>	Overcurrent trigger level in voltage input I2
I2<	Undercurrent trigger level in voltage input I2

Viewed data (default labels used, data is example values)	**Description of trigger**
I3>	Overcurrent trigger level in voltage input I3
I3<	Undercurrent trigger level in voltage input I3
I4>	Overcurrent trigger level in voltage input I4
I4<	Undercurrent trigger level in voltage input I4
I5>	Overcurrent trigger level in voltage input I5
I5<	Undercurrent trigger level in voltage input I5

5 View disturbance sequence number

5.1 Navigate the menus

This procedure describes how to view in consecutive order disturbance sequence number.

1. **View the sequence number.**

   Navigate the menus to:

   ServiceReport
   DisturbReport
   SequenceNo

6 Calculate the distance to fault

6.1 Navigate the menus

1. **Only one disturbance can be viewed at the time. Select the one to be viewed.**
2. **View the distance to fault calculation menu.**

   Navigate the menus to:

   DisturbanceReport
   CalcDistToFlt
   Disturbance*n*

   n is the disturbance order of occurrence, *n*=1 meaning the most recent and *n*=10 the least.

3. **Select a fault loop.**
4. **Press the E button to calculate.**

   The fault loop and distance to fault are displayed.

6.2 How the distance to fault is displayed

The calculated distance to fault is displayed in the following manner either in the disturbance summary or when the distance is manually recalculated:

FltLoop=<*Loop*>

Dist=<*Qualifier1*><*Qualifier2*> <*Distance value*><*Unit*>

The first row identifies the fault loop used for calculation.

The second row qualifies the calculated data and shows the distance using the selected unit, percent (%), kilometers (km) or english miles (mi).

Table 3: Qualifier1

Symbol	Meaning
Blank (no symbol)	The calculated distance was within the set line length.
“>”	The fault was detected in adjacent lines.

Table 4: Qualifier2

Symbol	Meaning
Blank (no symbol)	The calculated distance value has high accuracy.
“*”	The distance has low accuracy.
“E”	The distance is inaccurate. There was not enough data to perform the calculation.

7 Manually trigger the disturbance report

7.1 Navigate the menus

This procedure describes how to manually trigger the disturbance recording.

1. **Display the manual trigger dialog.**

   Navigate the menus to:

   DisturbReport
   ManualTrig

2. **Confirm the manual trigger.**

   Select **Yes** by using the **Left** and/or **Right** arrow buttons, of not already highlighted. Press the **E** button to assert the manual trigger.

   Select **No** and press the **E** button to avoid asserting a manual trigger.

8 View the used disturbance memory size

8.1 Navigate the menus

This procedure describes how to read the used disturbance memory size.

1. **View the size.**

   Navigate the menus to:

   ServiceReport
   DisturbReport
   MemoryUsed

9 Reset the LED alarms

9.1 Navigate the menus

This procedure describes how to reset LED's after evaluating the reasons of an alarm in order to prepare for new alarms.

1. **Make sure the basic terminal dialog is displayed.**

   You may need to press the **C** button repeatedly to return to the basic terminal dialog from the displayed menu branch or leaf.

2. **Press the C button to reset LED alarms.**

   All LED's are reset.

10 Test the LEDs of the LED module

10.1 Navigate the menus

This procedure describes how to test the LEDs of the LED module.

1. **Display the Test menu**

   Navigate the menus to:

   Test
   Mode
   HMI LED

2. **Press the OK button to enter test selection**
3. **Select test mode**

   Use the **Up** or **Down** arrow button to select **Yes** to prepare for the test to start.

4. **Confirm test mode**

   Press the **E** button to confirm the selection.

5. **Save test mode changes and start test**

   The Save test mode dialog is displayed. Save the change by selecting **Yes** and press the **E** button again. The LED test is started.

Stopp the HMI LED test

1. **Display the Test menu**

   Navigate the menus to:

   Test
   Mode
   HMI LED

2. **Press the OK button to enter test selection**
3. **Select test mode**

   Use the **Up** or **Down** arrow button to select **No** to prepare for the test to stop.

4. **Confirm test mode**

   Press the **E** button to confirm the selection.

5. **Save test mode changes and stop test**

   The Save test mode dialog is displayed. Save the change by selecting **Yes** and press the **E** button again. The LED test is stopped.

Chapter 7 View the protection system status

About this chapter

This chapter describes operations an operator may perform on a daily basis or when the need arises.

1 View the service values

1.1 Navigate the menus

This procedure describes how to navigate the menus to view line voltage, phase current, neg. seq. current, active power, reactive power and frequency. Such values are called *service values*.

1. **Display the Service values menu.**

   Navigate the menus to:

   ServiceReport
   ServiceValues

2. **Scroll the available service values to read mean values.**

   Use the **Left** and/or **Right** arrow buttons to scroll between values.

1.2 Available HMI service values

Each service value may be displayed using custom labels.

Table 5: Available service values

Viewed data (default labels used, data is example values)	Service value
U = 0.000 kV	Mean RMS voltage of voltage input channels 1-3
I = 0.000 A	Mean RMS current of current input channels 1-3
P = 0.000 MW	Mean active power of voltage and current channels 1-3
Q = 0.000 MVAr	Mean reactive power of voltage and current channels 1-3
f = 50.00 Hz	Mean frequency of voltage input channels 1-3
INegSeq = 0.000 A	Mean RMS negative sequence current of current input channels 1-3

2 View the primary and secondary phasors

2.1 Navigate the menus

This procedure describes how to navigate the menus to view primary and secondary measured analog values. Such values are called *phasors*.

View the primary phasors

1. **Display the primary phasors menu.**

   Navigate the menus to:

   ServRep
   Phasors
   Primary

2. **Scroll through the available values to read phasors.**

   Use the **Left** and/or **Right** arrow buttons to scroll between values.

View the secondary phasors

1. **Display the secondary phasors menu.**

   Navigate the menus to:

   ServRep
   Phasors
   Secondary

2. **Scroll the available values to read phasors.**

   Use the **Left** and/or **Right** arrow buttons to scroll between values.

2.2 Available primary and secondary phasors

Primary and secondary phasors are available for all voltage and current input channels, as well as the primary phasors for phase-to-phase voltages between voltage channels 1 and 2, 2 and 3 or 3 and 1.

Each phasor may be displayed using custom labels. Consult the station documentation to find the configured labels.

Table 6: Example of primary phasor (explanation of viewed data)

Viewed data (default labels are used, data is example values)	**Phasor**
U1 =	Measured analogue quantity (phasor)
0.000 kV	Magnitude of a measured phasor
0.0 deg	Phase angle of a measured phasor
	Phasor U2 and U3 utilize phasor U1 as reference

3 View the function block variables and output signals

3.1 Navigate the menus

This procedure describes how to navigate the menus to view function output signals.

View the status of function block binary outputs:

1. **Identify the function block to view.**

   Use table of the following section to find the function block to view.

2. **Display the list of outputs.**

   Navigate the menus to:

   Service Report
   - **Functions**
     - ***<name of function block>***
       - **FuncOutputs**

3. **Scroll the output values.**

   Use the **Left** and/or **Right** arrow buttons to scroll between values.

View the values of function block variables:

1. **Identify the function block and variable to view.**

   Use table of the following section to find the function block and variable to view.

2. **Display the list of outputs.**

   Navigate the menus to:

   Service Report
   - **Functions**
     - ***<name of function block>***
       - ***<function block variable>***

3. **Scroll the output values.**

   Use the **Left** and/or **Right** arrow buttons to scroll between values.

3.2 Contents of the Functions menu related to function outputs

Please note that the **Functions** menu contains more than what is described here. Other functions such as clearing of counters and calculated function data are also part of the service report, but described separately.

Table 7: Functions that may be viewed directly (in order of occurrence)

Designation	Function	Description
HMI LED	HLED	LED indication function
InstantOC	IOC	Instantaneous ocercurrent protection
TimeDelayOC	TOC	Time delayed overcurrent protection
CapUnbalance	TOCC	Unbalance protection for capacitor banks
InvTimeDelayOC	TOC2	Two step time delayed phase overcurrent protection
DirInvTDelayOC	TOC3	Two step time delayed residual overcurrent protection
OverLoad	OVLD	Overload supervision
ThermOverLoad	THOL	Thermal phase overload
Stub	STUB	Stub protection
PoleDiscord	PD	Pole discordance
BreakerFailure	BFP	Breake failure protection
TimeDelayUV	TUV	Time delayed under voltage protection
TimeDelayOV	TOV	Time delayed over voltage protection
IntCircBridge	TOVI	Inter circuit bridging
LossOfVoltage	LOV	Loss of voltage check
DeadLineDet	DLD	Dead line detection
BrokenConduct	BRC	Broken conductor check
CTSupervision	CTSU	Current circuit supervision
FuseFailure	FUSE	Fuse failure
Trip	TR	Trip logic
CommunicCHL	CCHL	Communication channel logic
RadialFeederP	PAP	Radial feeder protection
VoltageTransfS	TCT	Voltage transformer supervision
ComChanTest	CCHT	Communication channel test logic
FaultLocator	FLOC	Fault locator

Designation	Function	Description
ActiveGroup	GRP	Activation of setting groups
IEC103Command	ICOM	Serial communication
DisturbReport	DREP	Disturbance report
InternSignals	INT	Internal events
Test	TEST	Test mode
Time	TIME	Time synchronisation

Table 8: The Impedance group (Group designation: Impedance)

Designation	Function	Description
GenFltCriteria	GFC	General fault criteria
PhaseSelection	PSL	Phase selection logic
HighSpeed	HS	High speed protection
HighSpeedBO	HSBO	High speed binary output
Zone1	ZM1	Distance protection zone 1
Zone2	ZM2	Distance protection zone 2
Zone3	ZM3	Distance protection zone 3
Zone4	ZM4	Distance protection zone 4
Zone5	ZM5	Distance protection zone 5
ComLocal	ZCLC	Local acceleration logic
ZCommunication	ZCOM	Scheme communication logic
Com1P	ZC1P	Phase segregated scheme communication logic
ComIRevWEI	ZCAL	Current reversal and weak end infeed logic
PowerSwingDet	PSD	Power swing detection
PowerSwingLog	PSL	Additional logic for power swing detection
PoleSlipProt	PSP	Pole slip protection
SwitchOntoFlt	SOTF	Automatic switch onto fault

Table 9: The Earth Fault group (Group designation: Earth Fault)

Designation	Function	Description
TimeDelayEF	TEF	Time delayed earth fault protection
4stepEF	EF4	4 step earth fault protection
WattmetrEF1	WEF1	Sensetive residual overcurrent protection
WattmetrEF2	WEF2	Sensetive residual overcurrent protection
EFCom	EFC	Scheme communication logic
ComIRevWei	EFCA	Current reversal and weak end infeed logic

Table 10: System control and protection group (Group designation: System Protec)

Designation	Function	Description
SuddenChangeC	SCC1	Sudden change in phase current
SuddenChangeRC	SCRC	Sudden change in residual current
SuddenChangeV	SCV	Sudden change in voltage
OverCurrentP	OCP	Phase overcurrent protection
UnderCurrentP	UCP	Phase undercurrent protection
ResidOverCP	ROCP	Residual overcurrent protection
OverVoltageP	OVP	Over voltage protection
LowActivePP	LAPP	Low active power protection
LowActiveRP	LARP	Low active and reactive protection
HighActivePP	HAPP	High active power protection
HighActiveRP	HARP	High active and reactive power protection

Table 11: The Autorecloser group (Group designation: Auto Recloser)

Designation	Function	Description
AutoRecloser 1	AR01	AutoRecloser
AutoRecloser 2	AR02	
AutoRecloser 3	AR03	

Designation	Function	Description
AutoRecloser 4	AR04	
AutoRecloser 5	AR05	
AutoRecloser 6	AR06	

Table 12: The Syncrocheck group (Group designation: SynchroCheck)

Designation	Function	Description
SynchroCheck1	SYN1	SynchroCheck
SynchroCheck2	SYN2	
SynchroCheck3	SYN3	
SynchroCheck4	SYN4	

Table 13: The DC monitor group (Group designation: DC monitor)

Designation	Function	Description
MI11-Error		Error signal for input module 1 if present
MI21-Error		Error signal for input module 2 if present
MI31-Error		Error signal for input module 3 if present
MI41-Error		Error signal for input module 4 if present
MI51-Error		Error signal for input module 5 if present
MI61-Error		Error signal for input module 6 if present

Table 14: The Command function group (Group designation: Command function)

Designation	Function	Description
CD01		Single command function (16 signals)
CD02		
CD03		
CD04		
CD05		
CD06		

Designation	Function	Description
CD07		
CD08		
CD09		
CD10		
CD11		

Table 15: Basic logic group (Group designation: Basic logic)

Designation	Function	Description
AND1A	Annn	AND gates part 1
AND1B	Annn	AND gates part 2
OR1A	Onnn	OR gates part 1
OR2A	Onnn	OR gates part 2
XOR1	XOnn	Exclusive OR gates
INV	IVnn	Inverters
SR	SRnn	Set-reset flip-flops
Timer	TMnn	Timers
TimerLong	TLnn	Timers, long delay
Pulse	TPnn	Pulse generators, part 1
Pulse2	TPnn	Pulse generators, part 2
PulseLong1	TQnn	Pulse generators, long pulse, part 1
PulseLong2	TQnn	Pulse generators, long pulse, part 2
ContrGates1	GTnn	Controllable gates
TimerSet1	TSnn	Settable timers
SRWithMem1	SMnn	Set-reset flip-flops with memory

4 Read the measured and calculated function values

4.1 View the calculated impedances

This procedure describes how to read calculated impedance data.

1. **View the available impedance data.**

   Navigate the menus to:

   ServiceReport
   Functions
   Impedance
   General
   ImpValues

2. **Scroll the list to view each impedance value.**

   Use the **Left** and/or **Right** arrow buttons to scroll between values.

4.2 Calculated impedance values

Table 16: Calculated impedance values

Viewed data (default labels used, data is example values)	Impedance value
XL1= 144 Ohm/phase	Positive sequence reactance measured in phase L1 (L2, L3).
RL1= 193 Ohm/phase	Positive sequence resistance measured in phase L1 (L2, L3).
XL2= 142 Ohm/phase	Positive sequence resistance measured in phase L1 (L2, L3).
RL2= 192 Ohm/phase	Positive sequence resistance measured in phase L1 (L2, L3).
XL3= 143 Ohm/phase	Positive sequence resistance measured in phase L1 (L2, L3).
RL3= 194 Ohm/phase	Positive sequence resistance measured in phase L1 (L2, L3).

4.3 View the calculated direction

This procedure describes how to read calculated direction.

1. **View the available direction.**

   Navigate the menus to:

   ServiceReport
   Functions
   Impedance
   General
   ImpDirection

2. **Scroll the list to view direction for each phase.**

   Use the **Left** and/or **Right** arrow buttons to scroll between values.

4.4 Calculated direction

Table 17: Calculated direction

Viewed data (default labels used, data is example values)	Direction value
L1= None	Displays the direction of measured impedance in each respective phase loop. Values may be forward for forward direction, reverse for reverse direction and none, when it is not possible to define the correct direction.
L2= Reverse	
L3=L1 Forward	

4.5 View the calculated differential values

This procedure describes how to read calculated differential data.

1. **View the list of available differential data.**

   Navigate the menus to:

ServiceReport
Functions
Differential
DiffValues

2. **Scroll the list to view each value.**

   Use the **Left** and/or **Right** arrow buttons to scroll between values.

4.6 Calculated differential values

Table 18: Calculated differential values

Viewed data (default labels used, data is example values)	Differential value
IDiffL1= 0.003 A	Measured actual value of differential current in phase L1
IBiasL1= 0.734 A	The highest value of Bias currents in phase L1 or 1/2 of Bias current in L2 or 1/2 of Bias current in L3 max [(I_{bias}L1 or 0,5xI_{bias}L2 or 0,5I_{bias}L3)]
IDiffL2= 0.004 A	Measured actual value of differential current in phase L2
IBiasL2= 0.733 A	The highest value of Bias currents in phase L2 or 1/2 of Bias current in L1 or 1/2 of Bias current in L3 max [(I_{bias}L2 or 0,5xI_{bias}L1 or 0,5I_{bias}L3)]
IDiffL3= 0.002 A	Measured actual value of differential current in phase L3
IBiasL3= 0.735 A	The highest value of Bias currents in phase L3 or 1/2 of Bias current in L2 or 1/2 of Bias current in L1 max [(I_{bias}L3 or 0,5xI_{bias}L2 or 0,5I_{bias}L1)]

4.7 View the differential communication values

This procedure describes how to read differential communication values.

1. **View the list of available communication data.**

   Navigate the menus to:

   ServiceReport
   Functions
   Differential
   DiffCom

2. **Scroll the list to view each value.**

   Use the **Left** and/or **Right** arrow buttons to scroll between values.

4.8 Differential communication values

Table 19: Differential communication values

Viewed data (default labels used, data is example values)	Communication values
TransmDelay= 0.345 ms	One half of measured loop time delay in transmission of communication telegram
NoOfShInterr= 199	Recorded number of short interruptions in communication to the remote terminal (20 - 50)ms
NoOfMedInterr= 12	Recorded number of medium interruptions in communication to the remote terminal (50 - 200)ms
NoOfLongInterr= 2	Recorded number of long interruptions in communication to the remote terminal >200ms
CommStatus= OK	Status of communication link
NoOfTXD= 37 %	Percentage of theoretically possible transmit-ted telegrams
NoOfRXD= 41 %	Percentage of received transmitted telegrams
SyncError= 5 us	Synchronization error between two terminals

4.9 View the thermal overload temperatures

This procedure describes how to read thermal overload temperatures.

1. **View the list of available temperatures.**

   Navigate the menus to:

   ServiceReport
   Functions
   ThermOverLoad
   Temperature

2. **Scroll the list to view each value.**

   Use the **Left** and/or **Right** arrow buttons to scroll between values.

4.10 Thermal overload temperatures

Table 20: Thermal overload temperatures THOL (THOL-)

Viewed data (default labels used, data is example values)	Temperature
T Line	Actual line temperature
T Amb	Ambient temperature

4.11 View the automatic recloser counters

This procedure describes how to read automatic recloser counters.

1. **View the available counter data.**

   Navigate the menus to:

   ServiceReport
   Functions
   Autorecloser
   AutoRecloser*n*
   Counters

   where *n* is the instance to be viewed, numbers 1-6.

2. **Scroll the list to view each counter value.**

   Use the **Left** and/or **Right** arrow buttons to scroll between values.

4.12 Autorecloser counter values

Table 21: Autorecloser counter values AR (AR---)

Viewed data (default labels used, data is example values)	Counter value
1ph-Shot1= 12	Recorded number of first single pole reclosing attempts
3ph-Shot1= 331	Recorded number of first three-pole reclosing attempts
3ph-Shot2= 124	Recorded number of second three-pole reclosing attempts
3ph-Shot3= 55	Recorded number of third three-pole reclosing attempts
3ph-Shot4= 12	Recorded number of fourth three-pole reclosing attempts
NoOfReclosings= 534	Recorded number of all reclosing attempts

4.13 View the synchrocheck values

This procedure describes how to read synchrocheck values.

1. **View the available synchrocheck values.**

   Navigate the menus to:

   ServiceReport
   Functions
   SynchroCheck
   SynchroCheck*n*
   SyncValues

   where *n* is the instance to be viewed, numbers 1-4.

2. **Scroll the list to view each value.**

   Use the **Left** and/or **Right** arrow buttons to scroll between values.

4.14 Synchrocheck values

Table 22: Synchrocheck values

Viewed data (default labels used, data is example values)	Synchrocheck data
UDiff= 0.3455 %ofU1b	Measured voltage difference between measured and reference voltage
FreqDiff= 0.0231 Hz	Measured frequency difference between measured and reference voltage
PhaseDiff= 0.0215 deg	Measured phase difference between measured and reference voltage

4.15 View the event counter values

This procedure describes how to read pulse counter values.

1. **View the available counter data.**

   Navigate the menus to:

   ServiceReport
   Functions
   Counters
   Count
   Counters

2. **Scroll the list to view each counter value.**

   Use the **Left** and/or **Right** arrow buttons to scroll between values.

4.16 Event counter values

Table 23: Event counter values

Viewed data (default labels used, data is example values)	Counter value
Counter1= 23	Recorded number of pulses by counter no.1
Counter2= 456	Recorded number of pulses by counter no.2
Counter3= 12	Recorded number of pulses by counter no.3
Counter4= 7456	Recorded number of pulses by counter no.4
Counter5= 0	Recorded number of pulses by counter no.5
Counter6= 0	Recorded number of pulses by counter no.6

5 View the I/O function block signals

5.1 View the I/O module signals

This procedure describes how to navigate the menus to view binary I/O signals.

1. **Identify the slot and module to view.**

   Use table of the following section to find the slot and module to view.

2. **Display the list of signals.**

   Navigate the menus to:

   ServiceReport
   I/O
   <Slot and module name>
   FuncOutputs

3. **Scroll the list to view each individual signal.**

   Use the **Left** and/or **Right** arrow buttons to scroll between values.

5.2 I/O modules

I/O modules are always addressed by references to the slot in which the module resides, the module type and its order number, that is, which one of several modules of the same kind is to be addressed. The name are constructed in the following way:

Slot*<Slot number>***-***<Module type><Designation number>*

For the first binary input module mounted in slot 14 the name will be:

Slot14-BIM1

Consequently, for the second BIM module mounted in slot 16 the name will be:

Slot16-BIM2

Table 24: Module shorthands

Module	Module shorthand
Binary input module	BIM
Binary output module	BOM
Binary I/O module	IOM
Milliampere module	MIM

5.3 View the remote terminal communication data

This procedure describes how to navigate the menus to view remote terminal communication signals.

1. **Display the list of signals.**

   To view signals of function block RTC1, navigate the menus to:

   ServiceReport
   I/O
   RemTermCom1
   FuncOutputs

   To view signals of function block RTC2, navigate the menus to:

   ServiceReport
   I/O
   RemTermCom2
   FuncOutputs

2. **Scroll between the signals.**

   Use the **Left** and/or **Right** arrow buttons to scroll between signals.

5.4 Available signals

Table 25: Output signals for the binary signal transfer to remote end function

(RTCnn)

Signal	Description
REC01-REC16	Binary signals received from remote terminal, outputs 01-16
COMFAIL	Communication failure

6 Determine the active setting group

6.1 Navigate the menus

This procedure describes how to determine the active setting group.

1. **Determine the active group.**

   Navigate the menus to:

   ServiceReport
   ActiveGroup

7 Clear the autorecloser counters

7.1 Navigate the menus

This procedure describes how to clear the automatic reclosing counters.

1. Display the clear counters dialog.

Navigate the menus to:

ServiceReport
Functions
AutoRecloser
AutoRecloser*n*
Counters
ClearCounters

where *n* is the instance to be viewed, numbers 1-6.

2. Confirm clearing the counters.

Select **Yes** by using the **Left** and/or **Right** arrow buttons, of not already highlighted. Press the E button to confirm. Counters are cleared.

Select **No** and press the **E** button to leave the counters at their present value.

8 Clear the differential communication counters

8.1 Navigate the menus

This procedure describes how to clear the differential communication counters.

1. **Display the clear counters dialog.**

   Navigate the menus to:

   ServiceReport
   - **Functions**
     - **Differential**
       - **DiffCom**
         - **ClearCounters**

2. **Confirm clearing the counters.**

   Select **Yes** by using the **Left** and/or **Right** arrow buttons, of not already highlighted. Press the E button to confirm. Counters are cleared.

   Select **No** and press the **E** button to leave the counters at their present value.

9 Clear the event counters

9.1 Navigate the menus

This procedure describes how to clear the event counters.

1. **Display the clear counters dialog.**

   Navigate the menus to:

   ServiceReport
   - **Functions**
     - **Counters**
       - **Count**
         - **ClearCounters**

2. **Confirm clearing the counters.**

   Select **Yes** by using the **Left** and/or **Right** arrow buttons, of not already highlighted. Press the E button to confirm. Counters are cleared.

   Select **No** and press the **E** button to leave the counters at their present value.

Chapter 8 View the terminal unit status

About this chapter

This chapter describes operations an operator may perform on a daily basis or when the need arises.

1 Find the reason of an internal failure

1.1 Navigate the menus

This procedure describes how to navigate the menus in order to find the reason of an internal failure when indicated by the flashing green LED of the HMI module.

1. **Display the self supervision menu.**

   Navigate the menus to:

   TerminalReport
   SelfSuperv

2. **Scroll the supervision values to identify the reason of the failure.**

   Use the **Left** and/or **Right** arrow buttons to scroll between values.

1.2 Self supervision HMI data

Table 26: Output signals for the self supervision function

Indicated result	Reason	Action
InternFail = OK	No problem detected.	None.
InternFail = Fail	A failure has occured.	Check the rest of the indicated results to find the fault.
InternWarning = OK	No problem detected.	None.
InternWarning = Warning	A warning has been issued.	Check the rest of the indicated results to find the fault.
MPM-modFail = OK	No problem detected.	None.
MPM-modFail = Fail	The main processing module has failed.	Contact your ABB representative for service.
MPM-modWarning = OK	No problem detected.	None.

Indicated result	Reason	Action
MPM-modWarning = Warning	There is a problem with: • the real time clock. • the time synchronization.	Set the clock. If the problem persists, contact your ABB representative for service.
ADC-module = OK	No problem detected.	None.
ADC-module = Fail	The A/D conversion module has failed.	Contact your ABB representative for service.
Slot04BIM1 = Fail (Example data, se following section for details)	I/O module communication has failed.	Check that the I/O module has been configured and connected to the IOP1- block. If the problem persists, contact your ABB representative for service.
RealTimeClock = OK	No problem detected.	None.
RealTimeClock = Warning	The real time clock has been reset.	Set the clock.
TimeSync = OK	No problem detected.	None.
TimeSync = Warning	No time synchronization.	Check the synchronization source for problems. If the problem persists, contact your ABB representative for service.

2 Identify the terminal

2.1 Navigate the menus

2.1.1 Retrieve the terminal's serial number

1. **View the serial number from the terminal report.**

   Navigate the menus to:

   TerminalReport
   IdentityNo

2.1.2 Retrieve the terminal's identity

1. **View the identifiers from the configuration menu.**

   Navigate the menus to:

   Configuration
   Identifiers

2. **Scroll the available identifiers.**

   Use the **Left** and/or **Right** arrow buttons to scroll between values.

2.2 Available identifiers

Table 27: Set parameters for the general terminal parameters function

Parameter	Range	Default	Unit	Description
Station Name	-	"Station Name"	-	
Station No	0-99999	0	-	
Object Name	-	"Object Name"	-	
Object No	0-99999	0	-	
Unit Name	-	"Unit Name"	-	
Unit No	0-99999	0	-	

3 Read the terminal time

3.1 Navigate the menus

This procedure describes how to read the terminal time.

1. **View the date and time.**

   Navigate the menus to:

   ServiceReport
   Time

4 Retrieve the version of installed firmware

4.1 Navigate the menus

1. **View the firmware version from the terminal report.**

   Navigate the menus to:

   TerminalReport
   IdentityNo

5 Determine the installed modules

5.1 Navigate the menus

This procedure describes how to determine which modules are installed.

1. **View the list of modules.**

   Navigate the menus to:

   TerminalReport
   Modules

2. **Scroll the list of installed modules to view what is installed in each slot.**

   Use the **Left** and/or **Right** arrow buttons to scroll the list.

5.2 I/O modules

I/O modules are always addressed by references to the slot in which the module resides, the module type and its order number, that is, which one of several modules of the same kind is to be addressed. The name are constructed in the following way:

Slot<*Slot number*>**-**<*Module type*><*Designation number*>=<*Article number*>

For the first binary input module mounted in slot 14 the name will be:

Slot14-BIM1=1MRK000508-xx

Consequently, for the second BIM module mounted in slot 16 the name will be:

Slot16-BIM2=1MRK000508-xx

Table 28: Module shorthands

Module	Module shorthand
Binary input module	BIM
Binary output module	BOM
Binary I/O module	IOM
Milliampere module	MIM

6 Retrieve the nominal and rated values of analog inputs

6.1 Navigate the menus

This procedure describes how to determine the nominal and rated values of analog inputs.

1. **View the list of available analog input values.**

   Navigate the menus to:

   TerminalReport
   AnalogInputs

2. **Scroll the list to view values.**

   Use the **Left** and/or **Right** arrow buttons to scroll between values.

Table 29: Nominal and rated input values

Viewed data (default labels used, data is example values)	Value
Ur= 110.000 V	Rated AC voltage of a terminal
Ir= 5.0000 A	Rated AC current of a terminal
U1r= 63.509 V	Rated phase voltage of a channel U1
U2r= 63.509 V	Rated phase voltage of a channel U2
U3r= 63.509 V	Rated phase voltage of a channel U3
U4r= 63.509 V	Rated phase voltage of a channel U4
U5r= 63.509 V	Rated phase voltage of a channel U5

Viewed data (default labels used, data is example values)	**Value**
I1r= 5.0000 A	Rated phase current of a channel I1
I2r= 5.0000 A	Rated phase current of a channel I2
I3r= 5.0000 A	Rated phase current of a channel I3
I4r= 5.0000 A	Rated phase current of a channel I4
I5r= 5.0000 A	Rated phase current of a channel I5