Wiring table: 5483 482–CNG

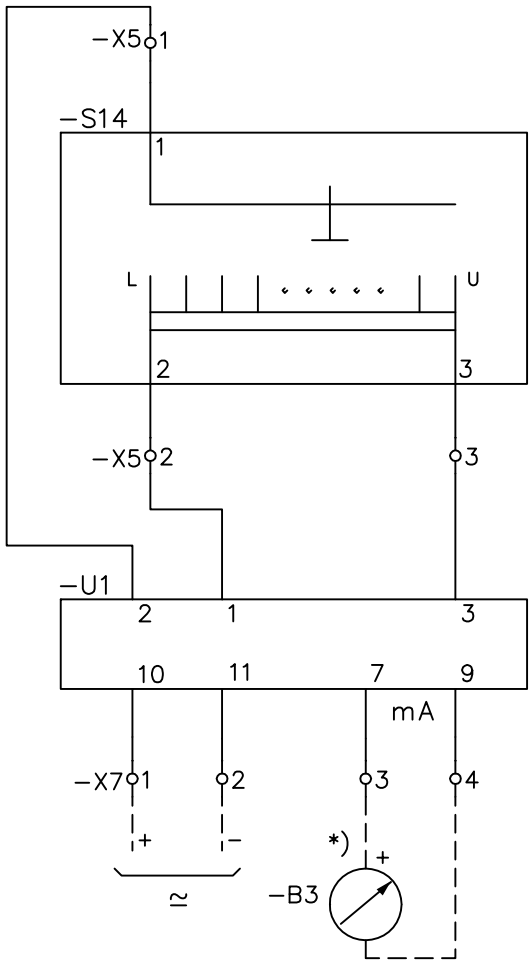

Voltage supply according to ratingplate

L = Lower limit position
U = Upper limit position

B3	Position indicator (only when ordered)
S14	Position transmitter (potentiometer)
U1	Measuring transducer
X	Terminal board group

*) Connection of analog position indicator when ordered.
To be replaced by one of the figures below when position indicator is digital.

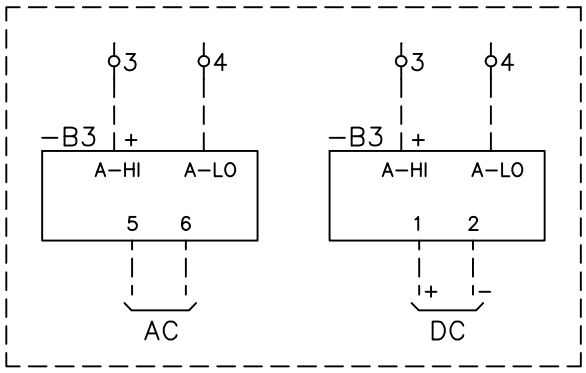

Based on			
Prepared	2006–11–24	THLA	
Approved	2006–12–06	TOLA	

Circuit Diagram Motor–drive Mechanism Pot. with measuring transducer		=MD	
	Resp dept COM/FOK	Rev ind	Lang
ABB	5475 913–43		Sheet 1 Cont –

abbd_a4p

We reserve all rights in this document and in the information contained therein. Reproduction, use or disclosure to third parties without express authority is strictly forbidden. © ABB Components AB